EO 05-5E-4

ROYAL CANADIAN AIR FORCE

PART LIST
SABRE 5, 5A AND 6
(VOL 1 OF 2)

(Pages 1-834)

REVISION NOTICE

LATEST REVISED PAGES SUPERSEDE THE SAME PAGES OF PREVIOUS DATE
Insert revised pages into basic publication.
Destroy superseded pages.

ISSUED ON AUTHORITY OF THE CHIEF OF THE AIR STAFF

16 JAN 59
Revised 24 Apr 64

LIST OF RCAF REVISIONS

(VOLUME 1 OF 2)

DATE	PAGE NO
21 Mar 60	iii
21 Mar 60	vii
21 Mar 60	9
21 Mar 60	12
21 Mar 60	15
21 Mar 60	28 to 30 incl
21 Mar 60	33
21 Mar 60	51
21 Mar 60	59
21 Mar 60	64
21 Mar 60	65
21 Mar 60	72
21 Mar 60	94 to 100 incl
21 Mar 60	118
21 Mar 60	122
21 Mar 60	123
21 Mar 60	143
21 Mar 60	151 to 153 incl
21 Mar 60	155
21 Mar 60	157
21 Mar 60	159
21 Mar 60	160
21 Mar 60	163
21 Mar 60	165
21 Mar 60	166
21 Mar 60	171 to 176 incl
21 Mar 60	179 to 180D incl
21 Mar 60	181
21 Mar 60	183
21 Mar 60	185
21 Mar 60	188
21 Mar 60	193
21 Mar 60	198
21 Mar 60	199
21 Mar 60	210
21 Mar 60	212
21 Mar 60	213
21 Mar 60	220
21 Mar 60	222
21 Mar 60	226
21 Mar 60	245
21 Mar 60	268
21 Mar 60	305
21 Mar 60	308 to 310 incl
21 Mar 60	314
21 Mar 60	323
21 Mar 60	324
21 Mar 60	360
21 Mar 60	361
21 Mar 60	374
21 Mar 60	378
21 Mar 60	381 to 384 incl
21 Mar 60	386
21 Mar 60	387
21 Mar 60	389
21 Mar 60	390
21 Mar 60	403
21 Mar 60	405
21 Mar 60	408
21 Mar 60	415
21 Mar 60	421
21 Mar 60	427
21 Mar 60	430
21 Mar 60	431
21 Mar 60	437
21 Mar 60	452
21 Mar 60	459
21 Mar 60	467
21 Mar 60	476
21 Mar 60	481
21 Mar 60	494
21 Mar 60	524
21 Mar 60	526
21 Mar 60	535
21 Mar 60	561
21 Mar 60	564 to 566 incl
21 Mar 60	568
21 Mar 60	574 to 576 incl
21 Mar 60	579 to 581 incl
21 Mar 60	584 to 588 incl
21 Mar 60	609
21 Mar 60	614
21 Mar 60	621
21 Mar 60	622
21 Mar 60	648 to 657 incl
21 Mar 60	660
21 Mar 60	661
21 Mar 60	677
21 Mar 60	685
21 Mar 60	687 to 691 incl
21 Mar 60	694
21 Mar 60	702
21 Mar 60	704
21 Mar 60	705
21 Mar 60	707
21 Mar 60	710
21 Mar 60	711
21 Mar 60	713

LIST OF RCAF REVISIONS

(VOLUME 1 of 2)

DATE	PAGE NO	DATE	PAGE NO
21 Mar 60	718		
21 Mar 60	719		
21 Mar 60	721		
21 Mar 60	723		
21 Mar 60	733		
21 Mar 60	736		
21 Mar 60	745		
21 Mar 60	780		
21 Mar 60	781		
21 Mar 60	788 to 792 incl.		
21 Mar 60	802 to 804 incl.		
21 Mar 60	818		
21 Mar 60	819		
21 Mar 60	826		
21 Mar 60	827		
21 Mar 60	833		
20 Jan 61	Cover		
22 Jun 62	174		
22 Jun 62	180A		
22 Jun 62	180D		
22 Jun 62	180E		
22 Jun 62	437		
22 Jun 62	438		
22 Jun 62	438A		
22 Jun 62	693		
22 Jun 62	694		
22 Jun 62	694A		
26 Aug 63	251		
26 Aug 63	431		
20 Dec 63	628		
24 Apr 64	95		
24 Apr 64	488		
24 Apr 64	489		
24 Apr 64	490		
24 Apr 64	491		
24 Apr 64	596		

LIST OF RCAF REVISIONS

(VOLUME 1 of 2)

DATE	PAGE NO	DATE	PAGE NO
21 Mar 60	718		
21 Mar 60	719		
21 Mar 60	721		
21 Mar 60	723		
21 Mar 60	733		
21 Mar 60	736		
21 Mar 60	745		
21 Mar 60	780		
21 Mar 60	781		
21 Mar 60	788 to 792 incl.		
21 Mar 60	802 to 804 incl.		
21 Mar 60	818		
21 Mar 60	819		
21 Mar 60	826		
21 Mar 60	827		
21 Mar 60	833		
20 Jan 61	Cover		
22 Jun 62	174		
22 Jun 62	180A		
22 Jun 62	180D		
22 Jun 62	180E		
22 Jun 62	437		
22 Jun 62	438		
22 Jun 62	438A		
22 Jun 62	693		
22 Jun 62	694		
22 Jun 62	694A		
26 Aug 63	251		
26 Aug 63	431		
20 Dec 63	628		

TABLE OF CONTENTS

PART	TITLE	PAGE
1	INTRODUCTION	1
2	GROUP ASSEMBLY PART LIST	27
3	SPECIAL SERVICE TOOL LIST	1287
4	BULK MATERIAL CHART	1315
5	NUMERICAL PART LIST	1359

LIST OF ILLUSTRATIONS

FIGURE	TITLE	PAGE
1	SABRE 5, 5A & 6 AIRCRAFT GENERAL ASSEMBLY	28
	SECTION 1 - WING	
2	COMPLETE WING	32
3	CENTRE SECTION WING	36
4	CENTRE SECTION WING SKINS	40
5	CENTRE WING SECTION FAIRING	44
6	COMPLETE OUTER WING	48
7	OUTER WING ACCESS DOORS	54
8	OUTER WING INTERMEDIATE PANEL	58
9	OUTER WING PANEL BOX	62
10	OUTER WING PANEL BOX FORWARD SPAR	68
11	OUTER WING PANEL REAR SPAR	74
12	OUTER WING PANEL UPPER SKINS	78
13	OUTER WING PANEL LOWER SKINS	82
14	OUTER WING INBOARD TRAILING EDGE	86
15	OUTER WING EXTENDED LEADING EDGE (EFFECTIVE AIRCRAFT 23001 TO 23370 INCL)	94
16	OUTER WING EXTENDED LEADING EDGE SKINS & DOORS (EFFECTIVE AIRCRAFT 23001 TO 23370 INCL)	102
17	WING EXTENDED LEADING EDGE EMERGENCY PROVISIONS (EFFECTIVE AIRCRAFT 23001 TO 23210 INCL)	108
18	OUTER WING SLATTED LEADING EDGE (EFFECTIVE AIRCRAFT 23371 & SUBS)	112
19	OUTER WING SLATTED LEADING EDGE STRUCTURE (EFFECTIVE AIRCRAFT 23371 & SUBS)	118
19A	OUTER WING STA 130-248 SLATTED LE STRUCTURE (EFFECTIVE AIRCRAFT 23371 & SUBS)	124
20	OUTER WING SLATS (EFFECTIVE AIRCRAFT 23371 & SUBS)	130
21	WEDGE EXTENDED SLATTED LEADING EDGE TO TIP (EFFECTIVE AIRCRAFT 23371 & SUBS)	138
22	WING EXTENDED LEADING EDGE TIP	140
23	OUTER WING FLAP	142
24	OUTER WING AILERON	150
25	AILERON COUNTERBALANCE & SEAL	156
	SECTION 2 - EMPENNAGE	
26	COMPLETE EMPENNAGE	164
26A	ELEVATOR & RUDDER MECHANISM	168
27	HORIZONTAL STABILIZER	172
28	EMPENNAGE ELEVATOR	178
28A	EMPENNAGE ELEVATOR	180B
29	VERTICAL STABILIZER	182
30	COMPLETE RUDDER	186
31	EMPENNAGE FILLET	192
	SECTION 3 - FUSELAGE	
32	COVERED FUSELAGE	198
33	GUN-BAY ACCESS DOOR	204

LIST OF ILLUSTRATIONS (Continued)

FIGURE	TITLE	PAGE
34	EQUIPMENT UPPER ACCESS DOOR	208
35	LOWER RADIO COMPARTMENT DOOR	212
36	COVERED FORWARD FUSELAGE STA 0-236	216
37	COCKPIT DECK & WINDSHIELD STRUCTURE	222
38	COCKPIT DECK & CANOPY MECHANISM	228
38A	COCKPIT WINDSHIELD STRUCTURE & COVER	234
39	NOSE FUSELAGE STA 0-63	238
39A	COCKPIT PRESSURE WEB	244
40	NOSE FUSELAGE STA 63-126	248
41	FUSELAGE STA 53 UPPER FRAME	254
42	FUSELAGE STA 0-126 LOWER FRAME	258
42A	FUSELAGE STA 53 LOWER FRAME	262
43	NOSE WHEEL & TRUNNION BEAMS	266
44	FUSELAGE STA 84-109 COMPLETE BOTTOM FRAME	270
45	FUSELAGE STA 0-131 AIR INTAKE DUCT	274
46	FUSELAGE STA 15-78 LOWER DUCT	278
47	FUSELAGE STA 15-78 UPPER DUCT	282
48	FUSELAGE STA 78-131 UPPER DUCT	286
49	FUSELAGE STA 78-128 LOWER DUCT	290
50	FUSELAGE STA 15 AIR DUCT NOSE FRAME & BALLASTS	294
51	FUSELAGE FRAME STA 84 TO CANTED STA 87	298
52	FUSELAGE STA 84-126 LOWER DOORS	304
53	COCKPIT PRESSURE WEB	308
54	AMMUNITION BOX ACCESS FAIRING DOOR	312
55	FUSELAGE STA 118 CANTED BULKHEAD	316
56	FUSELAGE STA 131-236 INTERMEDIATE SECTION	320
57	ENGINE MOUNT & FUSELAGE TO WING FILLET PLATE & ANGLE	326
58	FUSELAGE STA 131-183 AIR DUCT	330
59	FUSELAGE STA 131-183 UPPER AIR DUCT	332
60	FUSELAGE STA 178-236 UPPER FRAME	336
61	FUSELAGE LOWER FRAME & SHROUD	340
62	FUSELAGE STA 131-236 FRAME PORT SIDE	344
63	FUSELAGE STA 131-236 FRAME STARBOARD SIDE	350
64	ENGINE TO GROUND HYDRAULIC DISCONNECT	356
65	FUSELAGE STA 178-205 WHEEL WELL	358
65A	FUSELAGE STA 178 WHEEL WELL BULKHEAD	362
66	FUSELAGE STA 205 WHEEL WELL FRAME	364
67	COCKPIT ENCLOSURE WINDSHIELD	368
68	CANOPY EMERGENCY RELEASE (SABRE 5) (EFFECTIVE AIRCRAFT 23001 TO 23370 INCL)	372
69	CANOPY EMERGENCY RELEASE (SABRE 6) (EFFECTIVE AIRCRAFT 23371 & SUBS)	376
70	COCKPIT CANOPY & EMERGENCY RELEASE MECHANISM	380
71	COCKPIT ENCLOSURE SLIDING CANOPY	386
72	SABRE 5, 5A & 6 REAR FUSELAGE SPARES	392
73	COMPLETE REAR SECTION FUSELAGE	394
73A	SURFACE CONTROL PULLEY BRACKET	398
74	FUSELAGE STA 236-327 SIDE PANELS	402
75	REAR FUSELAGE STA 236-298 LOWER FRAME	410
76	REAR FUSELAGE UPPER FRAME	412
77	REAR FUSELAGE STA 327-430 FRAME	414

LIST OF ILLUSTRATIONS (Continued)

FIGURE	TITLE	PAGE
78	FUSELAGE TAIL-PIPE FAIRING	420
79	FUSELAGE SPEEDBRAKE WELL	422
80	FUSELAGE SPEEDBRAKES	426
	SECTION 4 - LANDING GEAR	
81	NOSE LANDING GEAR	430
82	NOSE LANDING GEAR CHASSIS	432
83	NOSE LANDING GEAR SHOCK STRUT	436
84	NOSE LANDING GEAR TRUNNION	440
85	NOSE LANDING GEAR DRAG BRACE	442
86	NOSE LANDING GEAR STEERING MECHANISM	446
87	NOSE LANDING GEAR STEERING PULLEY	450
88	NOSE LANDING GEAR STRUT DOOR	454
89	NOSE LANDING GEAR WHEEL DOOR	458
90	NOSE LANDING GEAR & DOOR UPLATCH	460
91	NOSE LANDING GEAR & DOOR UPLATCH	466
92	MAIN LANDING GEAR	470
93	MAIN LANDING GEAR CHASSIS	474
94	MAIN LANDING GEAR INDICATING & SEQUENCING MECHANISM	478
95	MAIN LANDING GEAR STRUT	480
96	MAIN LANDING GEAR WHEEL DOOR	484
97	MAIN LANDING GEAR WHEEL DOOR MECHANISM	488
98	MAIN LANDING GEAR FITTINGS	492
99	MAIN LANDING GEAR TRUNNION FITTING	496
100	LANDING GEAR EMERGENCY RELEASE	500
101	LANDING GEAR WING SECTION EMERGENCY RELEASE (EFFECTIVE AIRCRAFT 23201 & SUBS)	506
	SECTION 5 - POWER PLANT	
102	ORENDA 10 ENGINE & ACCESSORIES (EFFECTIVE AIRCRAFT 23001 TO 23370 INCL)	510
103	ORENDA 14 ENGINE & ACCESSORIES (EFFECTIVE AIRCRAFT 23371 & SUBS)	514
104	ORENDA 10 ENGINE & ACCESSORY LINES (EFFECTIVE AIRCRAFT 23001 TO 23370 INCL)	516
105	ORENDA 14 ENGINE & ACCESSORY LINES (EFFECTIVE AIRCRAFT 23371 & SUBS)	520
106	ORENDA 10 POWER PLANT (EFFECTIVE AIRCRAFT 23001 TO 23370 INCL)	524
107	ORENDA 14 POWER PLANT (EFFECTIVE AIRCRAFT 23371 & SUBS)	526
108	ENGINE NOSE FAIRING	528
109	ENGINE FIREWALL	532
110	ORENDA 10 ENGINE EXHAUST TAIL-PIPE (EFFECTIVE AIRCRAFT 23001 TO 23370 INCL)	534
111	ORENDA 14 ENGINE EXHAUST TAIL-PIPE (EFFECTIVE AIRCRAFT 23371 & SUBS)	538
112	ENGINE & THROTTLE CONTROLS	542

LIST OF ILLUSTRATIONS (Continued)

FIGURE	TITLE	PAGE
113	ENGINE POWER CONTROL QUADRANT (EFFECTIVE AIRCRAFT 23001 TO 23100 INCL)	546
114	ENGINE POWER CONTROL QUADRANT (EFFECTIVE AIRCRAFT 23101 & SUBS)	548
115	ENGINE POWER CONTROL QUADRANT THROTTLE LEVER (EFFECTIVE AIRCRAFT 23001 TO 23100 INCL)	552
116	ENGINE POWER CONTROL QUADRANT THROTTLE LEVER (EFFECTIVE AIRCRAFT 23101 & SUBS)	556
117	POWER & UTILITY CONTROL PUMPS	560
	SECTION 6 - FURNISHINGS EQUIPMENT	
118	PILOT EJECTION SEAT	564
119	PILOT EJECTION SEAT SHOULDER HARNESS	570
120	FUSELAGE FURNISHINGS	574
121	FUSELAGE FURNISHINGS PANELS	578
122	AUTO RELEASE MECHANISM	584
123	PILOT EJECTION SEAT HEADREST	586
124	PILOT EJECTION SEAT ARMREST	590
	SECTION 7 - FLIGHT CONTROLS	
125	CENTRE WING SURFACE CONTROL	594
126	AILERON FORWARD SURFACE CONTROL	598
127	PILOT CONTROL STICK	602
128	OUTER WING SURFACE CONTROL	604
129	AILERON CONTROL OPERATING MECHANISM	608
130	FORWARD FUSELAGE SURFACE CONTROL	612
131	HORIZONTAL STABILIZER CONTROL MECHANISM	616
132	REAR FUSELAGE SURFACE CONTROL	620
133	HORIZONTAL STABILIZER REAR CONTROL BELL-CRANK	624
134	HORIZONTAL STABILIZER CONTROL ARTIFICIAL FEEL	626
135	RUDDER FORWARD SURFACE CONTROL	630
136	PILOT RUDDER & BRAKE PEDAL	634
137	RUDDER REAR SURFACE CONTROL	638
138	FORWARD EMERGENCY CHANGE-OVER (EFFECTIVE AIRCRAFT 23001 TO 23210 INCL)	640
139	REAR EMERGENCY CHANGE-OVER (EFFECTIVE AIRCRAFT 23001 TO 23210 INCL)	644
	SECTION 8 - INSTRUMENT EQUIPMENT	
140	PILOT INSTRUMENT PANEL	648
141	FORWARD FUSELAGE INSTRUMENT EQUIPMENT	656
142	INSTRUMENT PANEL SHROUD	660
143	CENTRE WING INSTRUMENT EQUIPMENT	662
144	PORT OUTER WING INSTRUMENT EQUIPMENT	664
145	STARBOARD OUTER WING INSTRUMENT EQUIPMENT	666
146	FUSELAGE STA 72-145 INSTRUMENT EQUIPMENT	668
147	FUSELAGE STA 145-253 INSTRUMENT EQUIPMENT	670
148	TAIL-PIPE HARNESS & INSTRUMENT EQUIPMENT	672

LIST OF ILLUSTRATIONS (Continued)

FIGURE	TITLE	PAGE
	SECTION 9 - PITOT STATIC SYSTEM	
149	STARBOARD WING PITOT STATIC SYSTEM	676
150	FUSELAGE FORWARD PITOT STATIC SYSTEM	680
151	FUEL CONTROL PITOT STATIC SYSTEM	684
	SECTION 10 - ELECTRICAL EQUIPMENT	
152	NOSE FUSELAGE PORT SIDE ELECTRICAL EQUIPMENT	688
153	NOSE FUSELAGE STARBOARD SIDE ELECTRICAL	692
154	NOSE GEAR STEERING ELECTRICAL EQUIPMENT	698
155	FORWARD COCKPIT & INSTRUMENT PANEL ELECTRICAL	702
156	COCKPIT STA 53-71 PORT SIDE ELECTRICAL	706
157	COCKPIT STA 71-125 PORT SIDE ELECTRICAL	710
158	COCKPIT STARBOARD SIDE ELECTRICAL EQUIPMENT	718
159	DECK STA 123-144 PORT SIDE ELECTRICAL EQUIPMENT	724
160	DECK STA 123-144 STARBOARD ELECTRICAL EQUIPMENT	728
161	CANOPY & DECK INTERMEDIATE ELECTRICAL EQUIPMENT	732
162	RADIO-BAY PORT SIDE ELECTRICAL EQUIPMENT	736
163	RADIO-BAY STARBOARD SIDE ELECTRICAL EQUIPMENT	740
164	ENGINE-BAY & WHEEL WELL PORT SIDE ELECTRICAL	744
165	ENGINE-BAY & WHEEL WELL STBD SIDE ELECTRICAL	750
166	CENTRE WING ELECTRICAL EQUIPMENT	756
167	OUTER WING ELECTRICAL EQUIPMENT	760
168	EXTENDED LEADING EDGE ELECTRICAL EQUIPMENT (EFFECTIVE AIRCRAFT 23001 TO 23370 INCL)	762
169	EXTENDED SLATTED LEADING EDGE ELECTRICAL (EFFECTIVE AIRCRAFT 23371 & SUBS)	768
170	WING INBOARD TRAILING EDGE ELECTRICAL EQUIPMENT	774
171	WING TIP ELECTRICAL EQUIPMENT	780
172	REAR FUSELAGE STA 236-327 ELECTRICAL EQUIPMENT	782
173	REAR FUSELAGE STA 327-410 ELECTRICAL EQUIPMENT	788
174	RUDDER ELECTRICAL EQUIPMENT	794
175	ARMAMENT ELECTRICAL EQUIPMENT	796
176	ELECTRICAL RELAY STA 26 STARBOARD SIDE PANEL	802
177	ELECTRICAL CENTRE PEDESTAL	806
178	ELECTRICAL CENTRE PEDESTAL PANEL	810
179	FORWARD CONSOLE STA 72-79 PORT SIDE PANEL	812
180	FORWARD CONSOLE STARBOARD SIDE PANEL	814
181	DELETED	
182	FORWARD CONSOLE PORT SIDE PANEL & MOUNT	820
183	REAR CIRCUIT-BREAKER PORT SIDE PANEL	824
184	CIRCUIT-BREAKER STARBOARD SIDE PANEL	826
185	RELAY & CONTROL PANEL	828
186	FLAP PULLEY & SWITCH CLUSTER (EFFECTIVE AIRCRAFT 23001 TO 23100 INCL)	830
187	ELECTRICAL THREE-UNIT LIMIT SWITCH	832
	SECTION 11 - HYDRAULIC EQUIPMENT	
188	NOSE GEAR OPERATING HYDRAULIC EQUIPMENT	836
189	NOSE GEAR STEERING HYDRAULIC EQUIPMENT	842

LIST OF ILLUSTRATIONS (Continued)

FIGURE	TITLE	PAGE
190	FUSELAGE STA 53-135 PORT SIDE HYDRAULIC	846
191	FUSELAGE STA 53-135 STARBOARD SIDE HYDRAULIC	850
192	NOSE GEAR & FAIRING DOOR HYDRAULIC EQUIPMENT	856
193	FUSELAGE STA 133-178 HYDRAULIC EQUIPMENT	860
194	SPEEDBRAKE HYDRAULIC EQUIPMENT	866
195	FUSELAGE STA 178-236 UTILITY HYDRAULIC (PORT)	870
196	FUSELAGE STA 178-236 UTILITY HYDRAULIC (STARBOARD)	876
197	DOOR & LANDING GEAR STARBOARD SIDE HYDRAULIC	880
198	FUSELAGE STA 178-236 NORMAL HYDRAULIC EQUIPMENT	886
199	FUSELAGE STA 178-236 ALTERNATE HYDRAULIC EQUIPMENT	892
200	CENTRE WING HYDRAULIC EQUIPMENT	896
201	MAIN GEAR & FLAP HYDRAULIC EQUIPMENT	902
202	PORT WING FORWARD SPAR HYDRAULIC EQUIPMENT	908
203	PORT WING REAR SPAR HYDRAULIC EQUIPMENT	912
204	STARBOARD WING FORWARD SPAR HYDRAULIC EQUIPMENT	916
205	STARBOARD WING REAR SPAR HYDRAULIC EQUIPMENT	920
206	OUTER WING SURFACE CONTROL HYDRAULIC EQUIPMENT	924
207	REAR FUSELAGE UTILITY HYDRAULIC EQUIPMENT	928
208	REAR FUSELAGE NORMAL HYDRAULIC EQUIPMENT	932
209	PORT SIDE STA 244-298 ALTERNATE HYDRAULIC	936
210	PORT SIDE STA 298-363 ALTERNATE HYDRAULIC	940
211	REAR FUSELAGE STARBOARD SIDE ALTERNATE HYDRAULIC	946
212	EMPENNAGE HYDRAULIC EQUIPMENT	952
213	NOSE GEAR ALTERNATE EXTENSION ACCUMULATOR	956
214	NOSE GEAR ACTUATING CYLINDER	960
215	NOSE GEAR EXTENSION CYLINDER	962
216	NOSE GEAR FAIRING DOOR CYLINDER	964
217	MASTER BRAKE CYLINDER BELL-CRANK	966
218	PARKING BRAKE VALVE CONTROL	968
219	PARKING BRAKE COMPENSATOR VALVE	972
220	MASTER BRAKE CYLINDER	974
221	UTILITY SYSTEM RESERVOIR	976
222	SPEEDBRAKE SELECTOR VALVE	980
223	MAIN GEAR FAIRING DOOR SELECTOR VALVE	982
224	NORMAL HYDRAULIC RESERVOIR	984
225	NORMAL SURFACE CONTROL ACCUMULATOR	986
226	UTILITY SYSTEM 200 CUBIC INCH ACCUMULATOR	988
227	AIR-PRESSURE ACCUMULATOR	990
228	ACCUMULATOR AIR-PRESSURE GAUGE & VALVE	992
229	UTILITY RESERVOIR REGULATOR	994
230	SURFACE CONTROL HYDRAULIC FILTERS	996
231	SURFACE CONTROL NORMAL HYDRAULIC BY-PASS VALVE	998
232	MAIN LANDING GEAR OPERATING CYLINDER	1000
233	MAIN LANDING GEAR UPLOCK RELEASE CYLINDER	1002
234	MAIN LANDING GEAR DOWNLOCK CYLINDER	1004
235	MAIN LANDING GEAR FAIRING DOOR CYLINDER	1006
236	ALTERNATE POWER CONTROL PUMP	1008
237	POWER CONTROL COMPENSATOR	1010
238	SPEEDBRAKE OPERATING CYLINDER	1012
239	ALTERNATE POWER STARBOARD ACCUMULATOR	1014
240	ALTERNATE HYDRAULIC RESERVOIR	1016

LIST OF ILLUSTRATIONS (Continued)

FIGURE	TITLE	PAGE
241	STABILIZER CONTROL ACTUATOR	1018
242	STABILIZER CONTROL ACTUATOR CYLINDER	1022
243	STABILIZER CONTROL VALVE	1024
	SECTION 12 - FUEL SYSTEM	
244	CENTRE WING FUEL SYSTEM	1028
245	CENTRE WING FUEL CELL	1032
246	CENTRE WING INTERCONNECTING SYSTEM	1036
247	OUTER WING FUEL SYSTEM	1038
248	OUTER WING FUEL CELLS	1042
249	FUSELAGE FORWARD FUEL CELL	1046
250	FUSELAGE REAR FUEL CELL	1050
251	FUSELAGE FUEL CELL LINERS	1052
252	FUSELAGE FORWARD TANK FUEL SYSTEM	1054
253	FUSELAGE REAR TANK FUEL SYSTEM	1058
254	REAR FUEL CELL FILLER NECK	1062
255	FORWARD TO OUTER FUEL CELL VENT	1064
256	FUEL SHUT-OFF VALVE	1066
257	FUSELAGE SECTION DROP TANK FUEL & PRESSURE	1068
258	LEADING EDGE FUEL & PRESSURE EQUIPMENT (EFFECTIVE AIRCRAFT 23001 TO 23370 INCL)	1072
259	LEADING EDGE FUEL & PRESSURE EQUIPMENT (EFFECTIVE AIRCRAFT 23371 & SUBS)	1078
260	DROP FUEL TANK RELIEF-VALVE	1082
261	DROP FUEL TANK JETTISON MECHANISM (FUSELAGE) (EFFECTIVE AIRCRAFT 23001 TO 23210 INCL)	1084
262	DROP FUEL TANK JETTISON MECHANISM (WING) (EFFECTIVE AIRCRAFT 23001 TO 23210 INCL)	1088
263	DROP FUEL TANK RELEASE MECHANISM	1092
264	100-GALLON DROP FUEL TANK EQUIPMENT	1096
265	100-GALLON DROP FUEL TANK	1100
266	FORWARD SECTION 100-GALLON DROP FUEL TANK	1106
267	167-GALLON DROP FUEL TANK EQUIPMENT	1108
268	167-GALLON DROP FUEL TANK	1112
	SECTION 13 - OIL SYSTEM	
269	ENGINE OIL SYSTEM	1118
270	OIL TANK	1122
	SECTION 14 - HEAT & VENT & PRESSURIZATION SYSTEM	
271	COCKPIT PRIMARY HEAT & VENT SYSTEM	1126
272	COCKPIT SECONDARY HEAT & VENT SYSTEM	1130
273	COCKPIT HEAT & VENT CONTROLS	1134
274	COCKPIT HEAT & VENT AIR REGULATOR SYSTEM	1138
275	COCKPIT VENT SYSTEM	1140
276	COCKPIT PRESSURE SWITCH (EFFECTIVE AIRCRAFT 23001 TO 23210 INCL)	1142
277	CANOPY SEAL	1144

LIST OF ILLUSTRATIONS (Continued)

FIGURE	TITLE	PAGE
278	AMMUNITION HEAT & VENT SYSTEM (EFFECTIVE AIRCRAFT 23001 TO 23210 INCL)	1146
	SECTION 15 - ANTI-ICING & DE-ICING SYSTEM	
279	COCKPIT WINDSHIELD ANTI-ICING SYSTEM	1150
280	COCKPIT WINDSHIELD INNER DEFROSTING SYSTEM	1154
281	COCKPIT ENCLOSURE DEFROSTING SYSTEM	1158
282	FUEL FILTER ALCOHOL DE-ICING SYSTEM (EFFECTIVE AIRCRAFT 23001 TO 23210 INCL)	1162
283	FUEL FILTER ALCOHOL DE-ICING TANK (EFFECTIVE AIRCRAFT 23001 TO 23210 INCL)	1166
284	FUEL FILTER ALCOHOL DE-ICING PUMP (EFFECTIVE AIRCRAFT 23001 TO 23210 INCL)	1168
	SECTION 16 - ANTI-G SYSTEM	
285	PILOT ANTI-G SYSTEM	1172
286	PILOT QUICK DISCONNECT	1174
	SECTION 17 - OXYGEN SYSTEM	
287	PILOT OXYGEN SYSTEM	1178
	SECTION 18 - RADIO EQUIPMENT	
288	FUSELAGE STA 0-123 RADIO EQUIPMENT	1184
289	FUSELAGE STA 123-236 RADIO EQUIPMENT	1190
290	REAR FUSELAGE RADIO EQUIPMENT	1196
291	VERTICAL STABILIZER RADIO EQUIPMENT	1198
	SECTION 19 - RADAR EQUIPMENT	
292	AN/APG30 RADAR EQUIPMENT	1202
293	TYPE A-4 GUNSIGHT EQUIPMENT	1208
293A	FUSELAGE STA 53-145 TYPE A-4 GUNSIGHT EQUIPMENT	1214
294	TYPE A-4 GUN-BOMB-ROCKET SIGHT	1218
295	RADAR GUNSIGHT CAMERA EQUIPMENT	1220
296	AN/APX6 RADAR EQUIPMENT	1222
	SECTION 20 - ARMAMENT EQUIPMENT	
297	.50 CALIBRE NOSE GUN ARMAMENT EQUIPMENT	1226
298	.50 CALIBRE NOSE GUN EQUIPMENT	1230
299	.50 CALIBRE NOSE GUN PNEUMATIC CHARGING	1234
300	GUN OPEN PORT BLAST PANEL	1240
301	.50 CALIBRE SHELL CASE & LINK EJECTION LINER	1242
301A	.50 CALIBRE REAR SHELL CASE & LINK EJECTION LINER	1248
302	PILOT REAR ARMOUR-PLATE	1252
303	TOW TARGET FORWARD RELEASE EQUIPMENT (EFFECTIVE AIRCRAFT 23001 TO 23430 INCL)	1256

LIST OF ILLUSTRATIONS (Continued)

FIGURE	TITLE	PAGE
304	TOW TARGET RELEASE EQUIPMENT (EFFECTIVE AIRCRAFT 23001 TO 23430 INCL)	1260
305	TOW TARGET RELEASE MECHANISM (EFFECTIVE AIRCRAFT 23001 TO 23430 INCL)	1262
306	MOUNTED GUN CAMERA	1266
	SECTION 21 - LOOSE EQUIPMENT	
307	LOOSE EQUIPMENT & GENERAL DATA	1270
308	GROUND TEST HYDRAULIC HAND-PUMP	1274
309	ROCKET FORWARD MOUNT	1278
310	ROCKET EQUIPMENT KIT	1282
311	BOMB RACK	1284


F-86E
Sabre

PART 1

INTRODUCTION

TABLE OF CONTENTS

PARA	TITLE	PAGE
	INTRODUCTION	
1	GENERAL	3
3	PURPOSE OF THE PART LIST	3
4	LIMITATIONS	3
	CODING	
5	GENERAL	3
6	VENDOR ITEMS	3
7	STANDARD PARTS	3
8	GOVERNMENT FURNISHED EQUIPMENT	3
	USAGE CODE	
9	GENERAL	3
10	DECODING	3
11	FUEL TANK SPECIAL CODING	4
12	AIRCRAFT APPLICABILITY	4
	GROUP ASSEMBLY PART LIST	
13	GENERAL	4
14	PART 2 SECTIONING	4
15	TABLE OF CONTENTS	4
17	ILLUSTRATIONS	4
18	COMPILATION	4
19	FIGURE AND INDEX COLUMN	4
20	PART NUMBER COLUMN	4
21	NOMENCLATURE COLUMN	4
22	USAGE CODE COLUMN	4
23	UNITS PER ASSEMBLY COLUMN	4
24	INDENTION	4
26	ALTERNATIVE PARTS	5
27	SPARE PARTS	5
28	RCAF EO REFERENCES	5
30	REFERENCING	5
32	CONTINUED BREAKDOWNS	5
33	HANDED ASSEMBLIES	5
34	ATTACHING PARTS	6
35	PURCHASED PARTS	6
	ILLUSTRATIONS	
36	GENERAL	6
37	LOCATION OF PART ON AIRCRAFT	6
38	EXPLODED VIEWS	6
39	CODING	6

TABLE OF CONTENTS (Continued)

PARA	TITLE	PAGE
	DRAWING NUMBERING SYSTEM	
40	GENERAL	6
41	CANADAIR DRAWING NUMBERS	6
42	MODEL NUMBER	6
43	BASIC FUNCTION NUMBER	6
44	NORTH AMERICAN DRAWING NUMBERS	6
	STANDARDS	
45	CANADAIR STANDARDS	7
46	NORTH AMERICAN STANDARDS	7
47	SPECIFICATION STANDARDS	7
	FINDING AN ITEM IN THE PART LIST	
48	GENERAL	7
49	FINDING AN ITEM WHEN PART NUMBER IS KNOWN	7
50	FINDING AN ITEM WHEN PART NUMBER IS UNKNOWN	7
	PROPRIETARY NAMES AND ADDRESSES	
51	GENERAL	7
52	LOCATING A PROPRIETARY VNEDOR'S NAME AND ADDRESS	7
	SPECIAL SERVICE TOOLS	
53	GENERAL	8
54	TABLE OF CONTENTS	8
55	ILLUSTRATIONS	8
	BULK MATERIAL CHART	
56	GENERAL	8
58	LISTING ARRANGEMENT	8
59	TUBE DIMENSIONS	8
60	MATERIAL SPECIFICATION	8
	NUMERICAL PART LIST	8
61	GENERAL	8
62	PART NUMBER COLUMN	8
63	FIGURE AND INDEX COLUMN	8
64	QUANTITY COLUMN	8
65	ALTERNATIVE AND SPARE NUMBERS	8
	NOMENCLATURE ABBREVIATIONS AND CONTRACTIONS	
66	GENERAL	8

LIST	TITLE	PAGE
1	PROPRIETARY NAMES AND ADDRESSES	9
2	COMPOUND USAGE CODES	17
3	NOMENCLATURE ABBREVIATIONS AND CONTRACTIONS	20

CHART	TITLE	PAGE
1	SABRE 5, 5A & 6 AIRCRAFT EXPLODED VIEW	24
2	SABRE 5, 5A & 6 AIRCRAFT STATIONS	25
3	SPECIFICATIONS-COMMERCIAL DESIGNATIONS OF TUBING	1316

PART 1

INTRODUCTION

INTRODUCTION

GENERAL

1 This Part List is applicable to the Royal Canadian Air Force Sabre 5, 5A & 6 Aircraft, manufactured by Canadair Limited, Montreal, Quebec, Canada.

2 This Part List describes the items installed on the aircraft, according to engineering drawings, at the time it is delivered by the manufacturer, and includes all modifications requested by the RCAF.

PURPOSE OF THE PART LIST

3 The Part List has been prepared to provide identification of parts and to ensure the ordering of correct spares.

NOTE

In order to expedite the delivery of spare parts, the Aircraft Model, Part Number and Title should be supplied when requesting parts. To avoid costly delay in procurement, the exact position, function, and other pertinent data contributing to the adequate definition of parts shall be supplied with the requisition.

LIMITATIONS

4 The Part List is not to be construed as an authority for assembly or dis-assembly procedure. Overhaul or repair should be done by authorized personnel using the applicable Engineering Orders.

CODING

GENERAL

5 In order to conserve space and to facilitate quick reference, code systems have been introduced for Vendor Items, Standard Parts, and Government Furnished Equipment Parts.

VENDOR ITEMS

6 Vendor items are identified by three capital letters in parentheses in the nomenclature column. Code letters are listed alphabetically against the relevant manufacturer's name and address in List 1.

STANDARD PARTS

7 All Canadair and North American Aviation Standard Parts are indicated by (CAN) and (NAA) respectively.

GOVERNMENT FURNISHED EQUIPMENT

8 All Government Furnished Equipment is indicated by (G.F.E.).

USAGE CODE

GENERAL

9 The purpose of a Usage Code is to indicate parts which are limited for use on specific aircraft only.

DECODING

10 Usage codes shown in the Part List are the Royal Canadian Air Force Serial Numbers, less the first two digits. Decoding to determine the serial numbers of the aircraft on which the parts are used may be accomplished by adding the number 23 in front of the usage code shown. Examples: The usage code in the Part List is 001-370; the decoded answer would indicate that the part is effective on Aircraft serial numbers 23001 to 23370 inclusive. If the code is a three-digit number followed by a dash (371-), it means the effectivity would include 23371 and all subsequent aircraft. Furthermore, compound usage codes are explained in List 2 of this Introduction.

NOTE

Parts without a Usage Code are applicable to all aircraft.

FUEL TANK SPECIAL CODING

11 Aircraft serial numbers have not been applied against either the 100 or 167 gallon droppable fuel tank breakdowns. These breakdowns carry footnote coding which indicates the tank serial numbers.

AIRCRAFT APPLICABILITY

12 This issue of the Part List has been basically prepared for the Royal Canadian Air Force Sabre 5, 5A & 6 Aircraft, Serial Numbers 23001 and subsequent.

GROUP ASSEMBLY PART LIST

GENERAL

13 Part 2, the Group Assembly Part List, contains a Table of Contents, and illustrations with their accompanying compilation breakdowns.

PART 2 SECTIONING

14 Part 2 is divided into sections numbered consecutively. Each section such as Wing, Landing Gear, Fuel System, Electrical System, etc., lists all the installations, assemblies and detail parts pertaining to it, regardless of their position call-out on engineering drawings.

TABLE OF CONTENTS

15 The Table of Contents is a list of sections contained within Part 2. The section numbers are listed numerically with section titles and page numbers.

16 The Table of Contents for each section lists the figure numbers contained within the section, with figure titles and page numbers.

ILLUSTRATIONS

17 Refer to Paragraph 36, following.

COMPILATION

18 The compilation is printed on columned pages consisting of Figure and Index Number, Part Number, Nomenclature, Usage Code, and Units per Assembly columns.

FIGURE AND INDEX COLUMN

19 This column contains the Figure and Index numbers. Index numbers are listed in numerical sequence against assemblies and details requiring identification on the related illustration.

PART NUMBER COLUMN

20 In addition to normal part numbers, specification and type numbers are given where applicable. The word COMMERCIAL is used for items of hardware. Detail parts which have lost their individual identity as a result of having been fabricated into a permanent assembly, are not listed.

NOMENCLATURE COLUMN

21 The nomenclature shown in the Part List has been textually reproduced from the Engineering Drawing Title Block. Additional descriptive information, such as function, location, size, etc., may appear in parentheses following the nomenclature, in order to assist in identification.

USAGE CODE COLUMN

22 Parts with usage limitations are coded in this column as per Paragraphs 10 and 11. preceding.

UNITS PER ASSEMBLY COLUMN

23 Detail requirements shown in the Units per Assembly column are per assembly only. Assembly requirements are per installation and are generally the same as the total aircraft requirements. Each installation, being non-procurable, carries the letters NP. Items with varying requirements carry the letters AR (as required). Where REF appears, it indicates that the item is being referenced as per Paragraphs 30 and 31, following.

INDENTION

24 The item title indention in the nomenclature of the Group Assembly Part List is used to indicate the relationship between details and assemblies. Thus, parts with titles commencing in nomenclature column 2 are component parts of, and are assembled upon, the next preceding installation or assembly with

a title beginning in column 1. Part titles beginning in column 3 are component parts of, and are assembled upon, the next preceding part title commencing in column 2. In each instance the detail part or assembly must be within the same effectivity range as its next assembly. The breakdown continues in this pattern until all removable parts have been listed. This enables personnel to easily determine which parts may be stocked as assemblies, or details of assemblies.

25 On pages where the compilation breakdown ends, the symbol -000- will be found.

ALTERNATIVE PARTS

26 An alternative part is listed immediately following the part it may replace, and is separated from it by the word "OR" in the nomenclature column. No requirements are entered in the "Units per Assembly" column.

SPARE PARTS

27 In addition to production part numbers, the Part List lists spare part numbers in the part number column. These spare parts are listed immediately following their production items and are identified as: SPARE PART FOR....., in the same nomenclature indention column without requirements in the units per assembly column.

RCAF EO REFERENCES

28 Reference to RCAF EO numbers (AS PER EO...) is applied throughout the part list to either the nomenclature of specific items or to the bottom of the pages affected. When applied to specific items, the EO reference indicates that the inclusion of the item or assembly in the part list is the result of a completed modification authorized by the RCAF EO. When applied to the bottom of a Part List page, the EO reference indicates that the majority of items listed were included as the result of the RCAF EO. In either of the above situations, the modification has been completed on 95% of the aircraft affected by the RCAF EO.

29 When reference to RCAF EO numbers is (REMOVE ... AS PER EO ...) or (REPLACES ... AS PER EO...), it indicates that either the deletion or inclusion of the item is the result of an incomplete retrofit action authorized by the RCAF EO. The deleted or superseded item is listed for comparison purposes only.

REFERENCING

30 Referencing within a section of the Part List is applied by referring to figure number, eg: (SEE FIG. 10), in the nomenclature against the item title being referred for further breakdown. On this referenced figure the item is also referred to the originating figure. Where referencing is to be applied outside the section in which the referenced item is called, the reference will be to section only, eg: (SEE SECTION 14).

31 Referencing is also applied in the Part List for parts having a relationship between one or more figures. Thus, a fitting called up on the fuselage nose structure and which has a relationship to the nose gear, will be listed at the end of the nose gear breakdown with its item title in the first column of the nomenclature, and have a reference back to its originating figure or section.

CONTINUED BREAKDOWNS

32 An engineering drawing embodying one or more systems, and therefore pertaining to one or more sections will show, at the end of each figure breakdown, a reference to the figure or section in which the drawing breakdown continues. This is also true for the engineering drawings embodying too large a portion of the aircraft for one illustration. In these continued figures, regardless of the section in which they may appear, the drawing title will be kept, REF will be shown in the Units per Assy column, and the originating figure or section will be indicated in parentheses in the nomenclature. The Illustration title and Major Assembly title will indicate the correct system, function, and location.

NOTE

The next assembly for any given part in all breakdowns is always shown, and referenced where necessary to the figure or section where it originated.

HANDED ASSEMBLIES

33 Left and right handed assemblies and detail parts are identified by port and starboard

or LH and RH respectively at the end of the nomenclature title. The breakdown and the attaching parts for identical or nearly identical LH and RH assemblies, cover one of the assemblies only. The differing items, if any, are listed as (LH) and (RH). When handed assemblies differ materially, a separate breakdown with an illustration is given.

ATTACHING PARTS

34 Attaching parts are listed immediately following, and in the same indention column, as the assembly or item they serve to attach.

NOTE

Attaching parts must always be ordered separately, since they are not details of the assembly.

PURCHASED PARTS

35 Parts purchased by Canadair Limited, to vendor's drawings or specifications, are not broken down in the Part List. However, where applicable, the engineering order number is given against the purchased part assemblies for which a compilation breakdown can be obtained.

ILLUSTRATIONS

GENERAL

36 Illustrations, which accompany each compilation breakdown, normally show the left hand installation or assembly breakdown with corresponding item indices for identification purposes.

LOCATION OF PART ON AIRCRAFT

37 The blackened area on a small aircraft outline drawing which may be located in either of the upper corners of the illustration, indicates the location of the pertinent assembly in the aircraft.

EXPLODED VIEWS

38 Exploded views are used for the following purposes:

(a) To illustrate parts in greater detail.

(b) To illustrate parts used only on right hand installations or assemblies.

(c) To illustrate hidden items.

(d) To illustrate parts of different conformation and effectivities.

CODING

39 Illustrations that are applicable or restricted to certain aircraft have the aircraft effectivity shown in parentheses beneath the illustration title. Individual parts or assemblies applicable to certain aircraft carry coding signals, which are decoded on the illustration.

DRAWING NUMBERING SYSTEM

GENERAL

40 Regular drawing numbers listed in the Part List were created either by Canadair Limited or North American Aviation.

CANADAIR DRAWING NUMBERS

41 The Canadair drawing number system serves two purposes, and is therefore divided into two by a dash. The prefix designates the aircraft model, while the number following the dash is the basic function number.

MODEL NUMBER

42 The aircraft model number - or drawing prefix - indicates the aircraft for which the part was designed, however, a part designed originally for one model may be used on other models.

BASIC FUNCTION NUMBER

43 The basic function number is determined by the aircraft component. Thus, wing drawings are assigned numbers in the 10,000 series, fuselage drawings in the 30,000 series and power plant drawings in the 60,000 series, etc.

NORTH AMERICAN DRAWING NUMBERS

44 North American drawing numbers serve the same purposes as Canadair drawing numbers, as explained in Paragraph 41, preceding. However, in order to differentiate between Canadair redesigned part numbers and NAA part numbers for the same model, the Canadair prefix numbers are 13-, 13A- or 13B- in lieu of NAA's prefix numbers 170-, 172-, 193-, etc.

STANDARDS

CANADAIR STANDARDS

45 Canadair Standard part numbers are prefixed by the letter S and are further identified in the nomenclature by (CAN).

NOTE

Part numbers other than Canadair Standards having a letter S prefix are designated in the nomenclature by a Vendor Code.

NORTH AMERICAN STANDARDS

46 NAA Standard part numbers consist of a number, a letter and another number. The letter is the same as the first letter of the descriptive noun identifying the part. In some instances the basic number is the complete part number while in other cases a dash number coding is added to completely define the size and material, etc. For example: 4B12-2, 5B7, 7S4-10-10.

SPECIFICATION STANDARDS

47 Following is a list of other approved standard designations:

	STANDARD	DESIGNATION
(a)	Military Standards	MS
(b)	Air Force-Navy	AN
(c)	United States Air Force	USAF
(1)	Air Force	AF
(2)	Army-Air Force	AAF
(3)	Naval Aircraft Factory	NAF
(d)	National Aircraft Standards Committee	NAS

FINDING AN ITEM IN THE PART LIST

GENERAL

48 Both the Numerical Part List and the List of Illustrations are employed in finding an item in the Part List.

FINDING AN ITEM WHEN PART NUMBER IS KNOWN

49 To find an item when the part number is known, proceed as follows:

(a) Turn to Part 5, the Numerical Part List, and find the desired part number.

(b) Note the figure number, and index number where given. (Not all items carry an index number.)

(c) Turn to the noted figure to obtain the desired information.

FINDING AN ITEM WHEN PART NUMBER IS UNKNOWN

50 To find an item, the function or next assembly of which is known, but the part number unknown, proceed as follows:

(a) Turn to the list of Illustrations, locate the next assembly and note the page number.

(b) Turn to the indicated page number.

(c) Locate the item on the illustration.

(d) Note the index number (refer to (f) following).

(e) In the accompanying breakdown the part number and title will be found against the index number.

(f) An unindexed part which is illustrated may be found with its assembly, or, if the assembly is referenced, it may be found in the referenced figure.

PROPRIETARY NAMES AND ADDRESSES

GENERAL

51 List 1 of the Introduction is a complete list of proprietary names and addresses of manufactureres whose products are used on the Sabre 5, 5A & 6 aircraft, and which are called up in the Part List.

LOCATING A PROPRIETARY VENDOR'S NAME AND ADDRESS

52 By noting the code letters, as explained in Paragraph 6, preceding, the Proprietary

vendor's name and address may be determined by reference to the Proprietary Names and Addresses List.

SPECIAL SERVICE TOOLS

GENERAL

53 Part 3, Special Service Tools, contains a Table of Contents, and illustrations with their acompanying compilation breakdowns for those special tools and ground handling equipment purchased by the RCAF for the Sabre 5, 5A & 6 aircraft.

TABLE OF CONTENTS

54 The Table of Contents for Part 3 lists the figure numbers numerically, with titles and page numbers.

ILLUSTRATIONS

55 Refer to Paragraph 36, preceding.

BULK MATERIAL CHART

GENERAL

56 Part 4, the Bulk Material Chart, gives the required information to make up from stocked material tube assemblies of 3/4 inch outside diameter and under, which are called up in Part 2.

57 Chart 3, Specifications - Commercial Designations of Tubing, is for reference purposes only.

LISTING ARRANGEMENT

58 Listing is per system breakdown with the part numbers in numerical order.

TUBE DIMENSIONS

59 The tube size is in fractions of an inch (outside diameter), gauge in decimals of an inch and straight length in inches and fractions of an inch.

MATERIAL SPECIFICATION

60 This column contains the following information:

(a) First Line: Company material specification.

(b) Second Line: RCAF stocked material specification.

(c) Third Line: RCAF reference number.

NUMERICAL PART LIST

GENERAL

61 Part 5, the Numerical Part List, is compiled in sequence according to PROC 100-8. This List consists of a Part Number column, a Figure and Index column, and a Quantity column.

PART NUMBER COLUMN

62 The Part Number column, appearing in each sub-division of a page, contains the item part numbers as given in the Group Assembly Part List and the Special Service Tool List.

FIGURE AND INDEX COLUMN

63 This column lists the figure and index numbers as given against the relevant items in Part 2 and Part 3.

QUANTITY COLUMN

64 The Quantity column summarizes the call-outs in Part 2 and Part 3, but is not necessarily the total quantity per aircraft.

ALTERNATIVE AND SPARE NUMBERS

65 Parts listed in the Numerical Part List, for which requirements in the Quantity per Aircraft column are not shown, are the parts called out in Part 2 as alternative or spare parts, (refer to Paragraphs 26 and 27, preceding).

NOMENCLATURE ABBREVIATIONS AND CONTRACTIONS

GENERAL

66 List 3 supplements and follows the principles of 33-GP-2P, Interim Schedule of Abbreviations.

LIST 1 PROPRIETARY NAMES AND ADDRESSES

AAI Electronic Communications, Inc.,
Air Associates Division,
Teterboro Air Terminal,
Teterboro, New Jersey

ACB Aeroquip Corporation,
Aero-coupling Corp. Subsidiary,
3015 Winona Ave.,
Burbank, California

ACC American Chain & Cable Co., Inc.,
Automotive & Aircraft Division,
601 Stephenson Bldg.,
Detroit 2, Michigan

ADE General Metals Corporation,
Adel Precision Products Division,
10888 Van Owen Street,
Burbank, California

ADI Aviation Developments, Inc.,
210 S. Victory Blvd.,
Burbank, California

AFP Aircraft Tapered Sheet Inc.,
Los Angeles, California

AHC Andrews Hardware & Metal Company,
334 S. Main Street,
Los Angeles, California

ALU Aluminum Co. of America,
1501 Alcoa Building,
Pittsburgh 19, Pennsylvania

AME American Seating Company,
901 Broadway N.W.,
Grand Rapids 2, Michigan

AMP AMP Incorporated,
2100 Paxton Street,
Harrisburg, Pennsylvania

AMS American Screw Company,
1670 W. Main Street,
Willimantic, Connecticut

AMT Apex Machine & Tool Company,
1037 S. Patterson Blvd.,
Dayton 2, Ohio

AOV Robertshaw-Fulton Controls Co.,
ACRO Division,
2040 E. Main Street,
Columbus 16, Ohio

APC Amphenol Electronics Corporation,
1830 S. 54th Ave.,
Chicago 50, Illinois

AQC Aeroquip Corporation,
300 S. East Ave.,
Jackson, Michigan

ARH American Radio Hardware Co.,
152 MacQuesten Parkway, S.,
Mount Vernon, New York

ARM Garret Corporation, The,
Airesearch Manufacturing Co., Div.,
9851-9951 Sepulveda Blvd.,
Los Angeles 45, California

ARO ARO Equipment Corporation, The,
Enterprise & Trevitt Streets,
Bryan, Ohia

ARP Air Products Company,
322 E. Beach Ave.,
Inglewood, California

ATI Airtron, Incorporated,
1112 W. Elizabeth Ave.,
Linden, New Jersey

BAC Bendix Aviation Corporation,
Fisher Building,
Detroit 2, Michigan

BAN Boots Aircraft Nut Corporation,
Newtown Turnpike,
Norwalk, Connecticut

BBR Barber Machinery, F.F.,
1600 Berri Street,
Montreal 24, Quebec

BCM Bead Chain Manufacturing Co., The,
65 Mountain Grove,
Bridgeport 5, Connecticut

BDD Chain Belt Company,
Baldwin-Duckworth Division,
354 Plainfield Street,
Springfield, Massachusetts

BEC	Burndy Engineering Corp., Omaton Division, Norwalk, Connecticut
BEE	Burton Electrical Enrg. Co., 111 Maryland Street, El Segundo, California
BRE	Breeze Corporations, Inc., 700 Liberty Ave., Union, New Jersey
BUR	Burklyn Company, 3429 Glendale Blvd., Los Angeles 39, California
BUS	McGraw-Edison Company, Bussmann Mfg Division, University at Jefferson St., St. Louis 7, Missouri
CAD	Curtis Automotive Devices, Inc., P.O. Box 232, Bedford, Indiana
CAN	Canadair Limited, P.O. Box 6087, Montreal, Quebec
CAR	Carma Manufacturing Company, Los Angeles, California
CCT	Cornelius Company, The, 550 - 39th Ave., N.E., Minneapolis 21, Minnesota
CDP	Carl Drescher Precision Mach., Co., Glendale 5, California
CEC	Cook Electric Company, Magnilastic Division, 2700 Southport Ave., Chicago 14, Illinois
CED	Cannon Electric (Canada) Limited, 160F Bartley Drive, Toronto 16, Ontario
CFC	Camloc Fastener Corporation, 22 Spring Valley Road, Paramus, New Jersey
CGE	Canadian General Electric Co., Ltd., 212 King Street, W., Toronto, Ontario
CHC	Chrysler Corporation, Amplex Division, P.O. Box 2718, Detroit 31, Michigan
CHI	Cutler-Hammer, Incorporated, 315 N. 12th Street, Milwaukee 1, Wisconsin
CLA	Clark Co., Inc., David, P.O. Box 555, Worcester 2, Massachusetts
CLM	Clare & Company, C.P., 3101 Pratt Blvd., Chicago 45, Illinois
CMC	Clarostat Manufacturing Co., Inc., 285-287 N. 6th Street, Brooklyn 11, New York
COL	Cole Electric Company, 8439 Steller Drive, Culver City, California
CPT	Cleveland Pneu Industries, Inc., Cleveland Pneu Tool Co. Div., 3781 E. 77th Street, Cleveland 5, Ohio
CSC	California Spring Company Inc., 8401 E. Slauson Ave., Rivera, California
CSI	Henry Company, The Paul, Cam-Stat Inc. Division, 2310 S. La Cienega Street, Los Angeles 34, California
CTI	Continental Engrg Co. (Canada), 795 Versailles Street, Montreal 3, Quebec
CTS	Chicago Telephone Supply Corp., Elkhart, Indiana
DAC	Douglas Aircraft Company, Inc., 3000 Ocean Park Blvd., Santa Monica, California
DCI	Delron Company, Inc., The, 5224 Southern Ave., South Gate, California
DFC	Dzus Fastener Company, Inc., P.O. Box 185, Babylon, New York

DOM	Dominion Rubber Company, Ltd., 550 Papineau Ave., Montreal 24, Quebec
DUS	Deutsch Company, The, Los Angeles, California
EPD	Bendix Aviation Corporation, Eclipse-Pioneer Division, Teterboro, New Jersey
ESN	Elastic Stop Nut Corp. of America, 2330 Vauxhall Road, Union, New Jersey
ETA	Edison, Inc., Thomas A., Instrument Division, 71 Lakeside Ave., West Orange, New Jersey
FBC	Fafnir Bearing Company, The, Booth Street, New Britain, Connecticut
FBK	Frebank Company, 6441 San Fernando Road, Glendale, California
FEC	Frampton Electric Company, Fifth Street & Norward Ave., Dayton 7, Ohio
FEN	Fenwal Incorporated, Aviation Products Division, 270 Pleasant Street, Ashland, Massachusetts
FIR	First Industrial Corporation, Freeport, Illinois
FLE	Flexco, Incorporated, 7856 Salt Lake Ave., Huntington Park, California
FLO	Flexonics Corporation, 1352 S. Third Ave., Maywood, Illinois
GAE	General Aviation Equipment Co., Inc., Ashley, Pennsylvania
GCI	Glass Containers, Incorporated, 3601 Santa Fe Ave., Los Angeles, California
GCO	General Controls Company, 801 Allen Ave., Glendale 1, California
GEC	General Electric Company, Apparatus Sales Division, 1 River Road, Schenectady 5, New York
GEM	Guardian Electric Mfg., Co., 1621 W. Walnut Street, Chicago 12, Illinois
GLP	Gladden Aircraft Products Corp., 635 W. Colorado Blvd., Glendale 4, California
GMC	Grimes Manufacturing Company, 515 N. Russell Street, Urbana, Ohio
GPC	Garlock Packing Company, The, 402 Main Street, Palmyra, New York
GQP	G.Q. Parachute Co., Ltd., Stadium Works, Portugal Road, Working, Surrey, England
GRR	Greer Hydraulics, Inc., New York Int'l Airport, Jamaica 30, New York
HAE	Hartman Electrical Mfg., Company, 175 N. Diamond Street, Mansfield, Ohio
HAR	Hardman Tool & Engrg Co., 1845 S. Bundy Drive, Los Angeles 25, California
HAS	Hartwell Aviation Supply Co., 9035 Venice Blvd., Los Angeles 34, California
HCJ	Hendry Company, C.J., 27 Main Street, San Fransisco, California
HCL	Heli-Coil Corporation, Shelter Rock Lane, Danbury, Connecticut
HCO	Hoover Electric Company, 2100 S. Stoner Ave., Los Angeles 25, California

HDA Hydra Electric Company,
3800 W. Cohasset Street,
Burbank, California

HEC Heim Company, The,
46 Sanford Street,
Fairfield, Connecticut

HEN Henry Engineering Corporation,
3625 Pacific Ave., W.,
Burbank, California

HES Haskel Engrg & Supply Co.,
1236 S. Central Ave.,
Glendale 4, California

HET Hetherington, Incorporated,
Delmar Drive,
Folcroft, Pennsylvania

HLF Marsam Enterprises Inc.,
Halfco Bearing Division,
Beverly Hills, California

HMC Hammond Manufacturing Co., Ltd.,
43 Wellington Street, W.,
Guelph, Ontario

HPL Henry Company, The Paul,
2310 S. La Cienega Street,
Los Angeles 34, California

HRM Hydraulic Research & Mfg., Co.,
Burbank, California

HUB Huber Engineering Company,
Cincinnati, Ohio

HUC Huck Manufacturing Co.,
2480 Bellevue Ave.,
Detroit 7, Michigan

HUG Hughes Aircraft Company,
Hughes Products Division,
Int'l Airport Sta.,
Los Angeles 45, California

HUN Hunter Spring Company,
1 Spring Ave.,
Lansdale, Pennsylvania

ICA Insuline Corporation of America,
186 Granite Street,
Manchester, New Hampshire

JHB Cinch Manufacturing Corp.,
Jones Company, Howard B., Div.,
1026 S. Homan Ave.,
Chicago 24, Illinois.

JNI Juniper & Norris Co., Inc.,
3111 Winona Ave.,
Burbank, California

JPC James, Pond & Clark, Inc.,
2181 E. Foothill Blvd.,
Pasadena 8, California

KAH Aetna Steel Prod. Corporation,
Kahr Bearing Division,
812 S. Flower Street,
Burbank, California

KAP New Britain Machine Co., The,
Koehler Aircraft Prod. Co., Inc., Sub.,
409 Leo Street,
Dayton 4, Ohio

KAY Kaynar Company, The,
P.O. Box 2001,
Terminal Annex,
Los Angeles 54, California

KCI Kidde & Co., Inc., Walter,
Aviation Division,
567 Main Street,
Belleville 9, New Jersey

KCO Kohler Company,
Kohler, Wisconsin

KET Ketay Manufacturing Corp.,
New York, New York

KOL Standard Coil Prod. Co., Inc.,
Kollsman Instrument Corp., Subs.,
80-08 - 45th Ave.,
Elmhurst 73, New York

LEA Lear, Incorporated,
Grand Rapids Division,
110 Ionia Ave., N.W.,
Grand Rapids 2, Michigan

LEE Leece-Neville Company,
5109 Hamilton Street, N.E.,
Cleveland, Ohio

LEL American Machine & Foundry Co.,
Leland Electric Co., The, Division,
1501 Webster Street,
Dayton 4, Ohio

LIC Liquidometer Corporation, The,
41-03 - 36th Street,
Long Island City 1, New York

LRC	Leach Corporation, Leach Relay Division, 5915 Avalon Blvd., Los Angeles 3, California
LTF	Littelfuse, Incorporated, 1865 Miner Street, Des Plaines, Illinois
MAR	Mar Vista Engineering Co., Inc., 5428 W. 104th Street, Los Angeles 45, California
MAV	Magnavox Company, The, Industrial & Defense Prod. Div., 2131 Bueter Road, Fort Wayne 4, Indiana
MCG	McGill Manufacturing Co., Inc., Ball & &oller Division, 777 Oak Street, Valparaiso, Indiana
MCM	M.C. Manufacturing Company, 118 Indianwood Road, Lake Orion, Michigan
MHR	Minneapolis-Honeywell Rglr. Co., Aeronautical Division, 2600 Ridgway Road, Minneapolis 13, Minnesota
MIC	Molded Insulation Company, 335 E. Price Street, Philadelphia 44, Pennsylvania
MID	Midland Foundry & Machine Co., Ltd., Midland, Ontario
MKM	United-Carr Fastener Corp., Monadnock Mills Subsidiary, 1977 First Ave., San Leandro, California
MPC	Aeroquip Corporation, Marman Division, 11214 Exposition Blvd., Los Angeles 64, California
MPR	Mallory, P.R. & Co., Inc., 3029 E. Washington St., Indianapolis 6, Indiana
MRC	Marlin-Rockwell Corporation, 402 Chandler Street, Jamestown, New York
MRO	Marco Industries Co., P.O. Box 110, Anaheim, California
MSC	Minneapolis-Honneywell Reg Co., Micro Switch Division, Chicago & Spring Streets, Freeport, Illinois
MSP	Master Specialty Products, Minneapolis, Minnesota
NAA	North American Aviation, Inc., Los Angeles Int'l Airport, Los Angeles 45, California
NJM	North & Judd Manufacturing Co., New Britain, Connecticut
NSC	Nutt-Shel Company, Inc., 811 Air Way Glendale 1, California
NYA	New York Air Brake Co., The, 230 Park Ave., New York 17, New York
OJM	Oster, John, Manufacturing Co., Avionics Division, 1 Main Street, Racine, Wisconsin
OMC	Ohmite Manufacturing Co., 3658 W. Howard Street, Skokie, Illinois
OMS	Operating & Maintenance Spec. Co., Charlottown 1, North Carolina
PAC	Parker Appliance Co., The, 17325 Euclid Ave., Cleveland 12, Ohio
PAD	Pacific Airmotive Corporation, 2940 N. Hollywood Way, Burbank, California
PEP	Altec Lansing Corporation, Peerless Electrical Products Div., 1161 Vine Street, Hollywood, California
PHC	Phaostron Inst & Electronic Co., 151 Pasadena Ave., South Pasadena, California

PII Proof Industries Incorporated,
Cleveland, Ohio

PKC General American Transpt Corp.,
Parker-Kalon Division,
200 Varick Street,
New York 14, New York

PLI Plastic & Rubber Produts Co.,
2100 Hyde Park Blvd.,
Los Angeles 47, California

POT Potter Company, The,
1950 Sheridan Road,
North Chicago, Illinois

PPE Prenco Progress & Engrg, Corp., Ltd.,
72-74 Stafford Street,
Toronto, Ontario

PPI Borg-Warner Corporation,
Pesco Products Division,
24700 North Miles Road.,
Bedford, Ohio

PRI Price Corporation, D.W.,
11161 W. Pico Blvd.,
Los Angeles 46, California

PRO Protective Closures Co., Inc.,
CaPlugs Division,
218 Ramsdell Ave.,
Buffalo, New York

PSC Pacific Scientific Company,
P.O. Box 22019,
Los Angeles 22, California

PSI Precision Fabricators, Inc.,
East Rochester, New York

PUR Purolator Products, Inc.,
970 New Brunswick Ave.,
Rahway, New Jersey

RAI Robinson Aviation Incorporated,
Teterboro Air Terminal,
Teterboro, New Jersey

RAY Raybestos-Manhattan Inc.,
61 Willett Street,
Passaic, New Jersey

RBC Roller Bearing Co. of America,
Sullivan Way,
West Trenton, New Jersey

RCC Rubbercraft Corp, of California,
1800 W. 220th Street,
Torrance, California

REV Revere Corp. of America, Inc.,
845 N. Colony Road,
Wallingford, Connecticut

ROE Roe, A.V., Canada Limited,
Gas Turbine Division,
P.O. Box 430, Terminal "A",
Toronto, Ontario

ROS Rosan, Incorporated,
2901 W. Coast Highway,
Newport Beach, California

ROY Roylyn Incorporated,
620 Paula Ave.,
Glendale 1, California

SCR Schraders, A., Son,
470 Vanderbilt Ave.,
Brooklyn 17, New York

SEC Sprague Electric Company,
201 Beaver Street,
North Adams, Massachusetts

SFW Stewart, F.W., Corporation,
4311-13 Ravenswood Ave.,
Chicago 13, Illinois

SGC Sperry Rand Corporation,
Sperry Gyroscope Co. Division,
Great Neck,
Long Island, New York

SHI Illinois Tool Works,
Shakeproof Division,
St. Charles Road,
Elgin, Illinois

SKF SKF Industries, Incorporated,
Front Street & Erie Ave.,
Philadelphia 32, Pennsylvania

SLC Sealol Corporation,
Warwick Industrial Park,
Providence 5, Rhode Island

SMC Solar Manufacturing Corporation,
285 Madison Ave.,
New York 17, New York

SMT Smith, Herman H., Incorporated,
2326 Nostrand Ave.,
Brooklyn 10, New York

SNA Snap-On Tools Corporation,
8124 - 28th Ave.,
Kenosha, Wisconsin

SOD Soderberg Mfg. Company, Inc.,
628 S. Palm Ave.,
Alhambra, California

SPC Shakespeare Products Company,
241 E. Kalamazoo Ave.,
Kalamazoo, Michigan

SPI Standard Products, Incorporated,
P.O. Box 695,
Wichita, Kansas

SPS Standard Pressed Steel Co.,
P.O. Box 805,
Jenkintown, Pennsylvania

SQD Square D Company,
6060 Rivard Street,
Detroit 11, Michigan

STC Metals & Controls Corporation,
Spencer Thermostat Division,
34 Forest Street,
Attleboro, Massachusetts

STE Stimpson, Edwin B., Co., Inc.,
70 Franklin Ave.,
Brooklyn 5, New York

STT Standard-Thomson Corporation,
P.O. Box 376,
Dayton 1, Ohio

SVL Saval Incorporated,
1915 E. 51st Street,
Los Angeles 58, California

SWE Sweeney Engineering Corporation,
Culver City, California

SWM Speedex Wood Speciality Mfg., Co.,
Taylor Ave.,
Rockford, Illinois

TAI Thomas Associates,
4607 Alger Street,
Los Angeles 39, California

TBC Thomas & Betts Company, Inc., The,
30-36 Butler Street,
Elizabeth 1, New Jersey

TEL Teleflex Incorporated,
Church Road,
North Wales, Pennsylvania

TFI Titeflex, Incorporated,
500 Frelinghuysen Ave.,
Newark 5, New Jersey

TIN Tinnerman Products, Inc.,
P.O. Box 6688, Dept 16,
Cleveland 1, Ohio

TIO Tison Engineering, Inc.,
2226 S. Sepulveda Blvd.,
Los Angeles 64, California

TOR Torrington Company, The,
Field Street,
Torrington, Connecticut

TPI Thompson Products, Inc.,
Tapco Plant,
23555 Euclid Ave.,
Cleveland 17, Ohio

UCF United-Carr Fastener Corp.,
31 Ames Street,
Cambridge 42, Massachusetts

UCI United-Carr Fastener Corp.,
Ucinite Co., The, Division,
459 Watertown Street,
Newtonville 60, Massachusetts

UMP Universal Metal Products, Inc.,
331 Vineland Street,
Puente, California

UNX United Flexible Metallic Tubing,
(Canada) Ltd.,
128 Centre E.,
Richmond Hill, Ontario.

USR United States Rubber Company,
1250 Ave. of the Americas,
New York 20, New York

VII Sperry Rand Corporation,
Vickers Inc. Division,
1442 Oakman Blvd.,
Detroit 32, Michigan

VMC Vinson Manufacturing Co., Inc.,
8044 Woodley Ave.,
Van Nuys, California

VOI Pheoll Mfg Company,
Voi-Shan Mfg Co. Division,
P.O. Box 512,
Culver City, California

WCE West Coast Electrical Mfg., Corp.,
10008 S. main Street,
Los Angeles 3, California

WDM White, S.S. Dental Mfg Co.,
Industrial Division,
10 E. 40th Street,
New York, New York

WEC Waterman Engineering Company,
725 Custer Ave.,
Evanston, Illinois

WEI Daystrom, Incorporated,
Weston Electrical Instrument
Corp. Subsidiary,
614 Frelinghuysen Ave.,
Newark 12, New Jersey

WFC Wolfe, Franklin C., Company,
10567 W. Jefferson Blvd.,
Culver City, California

WHC Borg-Warner Corporation,
Weston Hydraulics, Ltd. Subs.,
10918 Burbank Blvd.,
North Hollywood, California

WIT Wittek Manufacturing Company,
4305 W. 24th Place,
Chicago 23, Illinois

WKI Waldes Kohinoor, Incorporated,
Truarc Division,
47-16 Austel Place,
Long Island City 1, New York

WLE Ward Leonard Electric Company,
115 MacQuesten Parkway,
S. Mount Vernon, New York

WMC Wemac Company,
502 S. Isis Ave.,
Inglewood, California

WTM Waltham Precision Instrument Co.,
221 Crescent Street,
Waltham 54, Massachusetts

WTR Whittaker Company, Ltd, WM. R.,
915 N. Citrus Ave.,
Los Angeles 38, California

ZMR Zoomar (Canada) Limited,
265 Craig Street, W.,
Montreal 1, Quebec

LIST 2 COMPOUND USAGE CODES

CODE	FROM	TO	FROM	TO	FROM	TO	FROM	TO	FROM	TO
A1	23001	23210	23301	23610						
A2	23001	23100	23371	SUBS						
A3	23001	23620	23622	23627	23629	23662	23664	23667	23670	ONLY
	23673	ONLY								
A4	23001	23370	23611	SUBS						
A5	23001	23676	23678	ONLY						
A6	23001	23005	23007	23012	23014	ONLY	23017	23021	23023	ONLY
	23026	23028	23032	ONLY	23035	23038	23040	23370		
A7	23006	ONLY	23013	ONLY	23015	23016	23022	ONLY	23024	23025
	23029	23031	23033	23034	23039	ONLY				
A8	23001	23020	23202	SUBS						
A9	23001	23369	23371	SUBS						
A10	23001	23020	23070	SUBS						
A11	23001	23370	23400	SUBS						
A12	23001	ONLY	23202	23203	23205	ONLY	23207	23370		
A13	23002	23201	23204	ONLY	23206	ONLY				
A14	23001	23490	23667	SUBS						
A15	23001	23410	23413	23414	23417	ONLY	23690	ONLY	23694	23695
	23698	ONLY	23701	23729						
A16	23001	23679	23690	SUBS						
A17	23001	ONLY	23004	ONLY	23006	23007	23009	23013	23015	23017
	23019	23023	23025	23026	23029	23047	23049	23052	23583	SUBS
A18	23002	23003	23005	ONLY	23008	ONLY	23014	ONLY	23018	ONLY
	23024	ONLY	23027	23028	23048	ONLY				
A19	23001	ONLY	23006	23007	23009	ONLY	23011	ONLY	23013	ONLY
	23016	23017	23020	23023	23025	23026	23028	23370		
A20	23002	23005	23008	ONLY	23010	ONLY	23012	ONLY	23014	23015
	23018	23019	23024	ONLY	23027	ONLY				
A21	23006	ONLY	23013	ONLY	23015	23016	23022	ONLY	23024	23025
	23029	23031	23033	23034	23039	ONLY				
A22	23001	23679	23702	SUBS						
A23	23001	23680	23695	SUBS						
A24	23001	23680	23690	SUBS						
A25	23001	23611	23613	23614	23624	ONLY	23629	ONLY	23635	23636
	23641	ONLY								
A26	23001	ONLY	23004	ONLY	23012	23013	23015	23017	23019	23023
	23025	23026	23028	23052						
A27	23002	23003	23005	23011	23014	ONLY	23018	ONLY	23024	ONLY
	23027	ONLY	23053	SUBS						
A28	23001	ONLY	23021	ONLY	23041	ONLY	23333	ONLY	23338	ONLY
	23340	23342	23344	SUBS						
A29	23002	23020	23022	23040	23042	23332	23334	23337	23339	ONLY
	23343	ONLY								
A30	23001	23100	23567	SUBS						
A31	23001	ONLY	23021	ONLY	23035	ONLY	23124	SUBS		
A32	23001	ONLY	23009	ONLY	23013	ONLY	23021	ONLY	23025	ONLY
	23034	23035	23037	ONLY	23040	23041	23043	23044	23048	23049
	23053	23054	23057	ONLY	23059	ONLY	23062	ONLY	23065	23069
	23072	ONLY	23074	23077	23079	23093	23096	ONLY	23099	ONLY
	23105	SUBS								

CODE	FROM	TO	FROM	TO	FROM	TO	FROM	TO	FROM	TO
A33	23002	23008	23010	23012	23014	23020	23022	23024	23026	23033
	23036	ONLY	23038	23039	23042	ONLY	23045	23047	23050	23052
	23055	23056	23058	ONLY	23060	23061	23063	23064	23070	23071
	23073	ONLY	23078	ONLY	23094	23095	23097	23098	23100	23104
A34	23001	ONLY	23021	SUBS						
A35	23001	23596	23617	SUBS						
A36	23001	23210	23371	SUBS						
A37	23001	23210	23240	SUBS						
A38	23001	23610	23689	SUBS						
A39	23031	23045	23048	ONLY						
A40	23046	23047	23049	SUBS						
A41	23001	23100	23201	SUBS						
A42	23001	23611	23613	23615	23617	ONLY	23619	23620	23622	23627
	23629	23644	23646	23650	23652	23658	23660	ONLY		
A43	23001	23317	23319	23329						
A44	23001	23300	23491	SUBS						
A45	23002	23020	23022	23040	23042	23370				
A46	23001	23682	23709	SUBS						
A47	23001	23210	23491	SUBS						
A48	23001	23679	23695	SUBS						
C1	23211	23370	23400	SUBS						
C2	23210	23490	23667	SUBS						
D1	23375	ONLY	23428	ONLY	23465	ONLY	23491	ONLY	23495	ONLY
	23519	ONLY	23551	ONLY	23561	ONLY	23568	ONLY	23574	ONLY
	23578	23579	23581	23610						
D2	23371	23374	23376	23403	23405	23427	23429	23431	23433	23435
	23438	23441	23443	23445	23447	23448	23450	23464	23466	23490
	23493	23494	23497	23502	23504	23505	23507	23510	23517	23518
	23520	23525	23527	23529	23531	ONLY	23533	23534	23536	ONLY
	23539	23545	23553	ONLY	23555	ONLY	23558	23560	23562	23567
	23569	23573	23575	ONLY	23577	ONLY	23580	ONLY		
D3	23301	23620	23622	23627	23629	23662				
D4	23371	23610	23621	23736						
D5	23371	23610	23621	SUBS						
D6	23370	ONLY	23372	SUBS						
D7	23371	23583	23663	SUBS						
D8	23371	23679	23690	SUBS						
D9	23371	23680	23696	SUBS						
D10	23378	23403	23405	23610						
D11	23371	23590	23663	SUBS						
D13	23371	23610	23689	SUBS						
D14	23318	ONLY	23330	SUBS						
E1	23404	ONLY	23432	ONLY	23436	23437	23442	ONLY	23446	ONLY
	23449	ONLY	23492	ONLY	23496	ONLY	23503	ONLY	23506	ONLY
	23511	23516	23526	ONLY	23530	ONLY	23532	ONLY	23535	ONLY
	23537	23538	23546	23550	23552	ONLY	23554	ONLY	23557	ONLY
E2	23491	23676	23678	ONLY						
E3	23411	23412	23415	23416	23418	23689	13691	23693	23696	23697
	23699	23700	23730	SUBS						
G1	23621	ONLY	23628	ONLY	23663	ONLY	23668	23669	23671	23672
	23674	23731								
G2	23621	ONLY	23628	ONLY	23663	ONLY	23668	23669	23671	23672
	23674	SUBS								

CODE	FROM	TO	FROM	TO	FROM	TO	FROM	TO	FROM	TO
G3	23664	23667	23670	ONLY	23673	ONLY				
G4	23677	ONLY	23679	SUBS						
G5	23677	ONLY	23679	23719						
G6	23621	ONLY	23628	ONLY	23659	ONLY	23662	ONLY	23669	SUBS
G7	23612	ONLY	23615	23623	23625	23628	23630	23634	23637	23640
	23642	SUBS								
G8	23612	ONLY	23615	23623	23625	23628	23630	23634	23637	23640
	23642	23653	23655	23752						
G9	23612	ONLY	23616	ONLY	23618	ONLY	23621	ONLY	23628	ONLY
	23645	ONLY	23651	ONLY	23659	ONLY	23661	SUBS		

LIST 3 CANADAIR ABBREVIATIONS AND CONTRACTIONS

A

AC	ALTERNATING-CURRENT
ACC	ACCESS
ACCUM	ACCUMULATING, OR
ACFT	AIRCRAFT
ACTE	ACTUATING, OR
ADJ	ADJUSTABLE, ING, MENT
ADPT	ADAPTER
AI	ANTI-ICING
AIL.	AILERON
ALC	ALCOHOL
ALT	ALTITUDE
ALTR	ALTERNATE, ING, OR
AMO	AMMUNITION
AMP	AMPERE
AMPL	AMPLIFIER
ANT.	ANTENNA
A/PRESS	AIR-PRESSURE
ARTL	ARTIFICIAL
ASSY	ASSEMBLY
ATM	ATMOSPHERE
ATO	ASSIST TAKE-OFF
ATT	ATTACHING, MENT
AUTO	AUTOMATIC
AUX	AUXILIARY
AVB	ANTI-VIBRATOR

B

BAL	BALANCE
BAT.	BATTERY
BELCRK	BELL-CRANK
BHD	BULKHEAD
BL	BUTTOCK LINE
BOT.	BOTTOM
BP	BUTTOCK PLANE
BRG	BEARING
BRKDN	BREAKDOWN
BRKT	BRACKET
BSTR	BOOSTER

C

CAL	CALIBRE
CBAL	COUNTERBALANCE
CDT	CONDUIT
CHAN	CHANNEL
CHG	CHARGE, ING
CHGR	CHARGER
CH/OV	CHANGE-OVER
CKPT	COCKPIT
CKT	CIRCUIT
CKT/BKR	CIRCUIT-BREAKER
COAX.	COAXIAL
COMB.	COMBINATION
COMP	COMPASS
COMPL	COMPLETE
COMPR	COMPRESSION, OR
COMPT	COMPARTMENT
COMPTR	COMPENSATOR
CONN	CONNECTING, OR
CPLG	COUPLING
CRE	CORROSION-RESISTANT
CSK	COUNTERSUNK
CTL	CONTROL
CTL/SURF	CONTROL SURFACE
CTR	CENTRE, CENTRING
CTR/SECT	CENTRE SECTION
CTR/W	CENTRE WING
CU/IN	CUBIC INCH
CV	CHECK VALVE
CYL	CYLINDER

D

DBLR	DOUBLER
DC	DIRECT-CURRENT
DEG	DEGREE
DEMAGN	DEMAGNETIZED
DESIG	DESIGNATION
D/FOG	DEFOGGING
D/FR	DEFROSTING
DIAGL	DIAGONAL
D/ICE	DE-ICER, ING
DIFF	DIFFERENTIAL
DISC.	DISCONNECT, ING, OR
DISCH	DISCHARGE
DP	DOUBLE-POLE
DTCH	DETACHABLE
DWG	DRAWING
DWNLK	DOWNLOCK

E

EFF	EFFECTIVE, ITY
EJ	EJECTION, OR
ELEC	ELECTRICAL
ELECT.	ELECTROLYTIC
ELEVR	ELEVATOR
ELL.	ELBOW
EMP	EMPENNAGE
EMY	EMERGENCY
ENCL	ENCLOSURE
ENG	ENGINE

EQUIP.	EQUIPMENT
EXCH	EXCHANGER, ING
EXH	EXHAUST
EXT	EXTERNAL
EXTN	EXTENDED, SION

F

FAIR.	FAIRING
F/DETN	FIRE DETECTION
FIG.	FIGURE
FIX.	FIXTURE
FL	FLOOR
FLD	FAIRLEAD
FLEX.	FLEXIBLE
FLT	FILTER
FRA	FRAME
FRAG	FRAGMENTATION
FRIC	FRICTION
FRT	FRONT
FT	FOOT, FEET
FTG	FITTING
FUS	FUSELAGE
FUT	FUTURE
FWD	FORWARD

G

GA	GAUGE
GAL	GALLON
GBR/SIGHT	GUN-BOMB-ROCKET SIGHT
GD	GUARD
GEN	GENERATOR
GR	GEAR
GRD	GROUND
GSAP	GENERAL SERVICE AERIAL PHOTOGRAPHY
GYRO	GYROSCOPE

H

HD	HEAD
HEX	HEXAGON
HNG	HINGE
HOR	HORIZONTAL
HOR/STAB	HORIZONTAL STABILIZER
H/PRESS	HIGH PRESSURE
HTR	HEATER
H/VENT	HEAT & VENT
HYD	HYDRAULIC

I

IDENT	IDENTIFICATION
IFF	IDENTIFICATION FRIEND OR FOE
IMP.	IMPERIAL
IMPG	IMPREGNATED
IN.	INCH, ES
INBD	INBOARD
IND	INDICATING, OR
INFL	INFLAMMABLE
INJ	INJECTION
INSP	INSPECTED, ION
INST	INSTRUMENT
INSTL	INSTALLATION
INSTN	INSTRUCTION
INT	INTERNAL
INTCHG	INTERCHANGEABLE
INTER	INTERMEDIATE
INTERCONN	INTERCONNECT, ING, OR
INTERCST	INTERCOSTAL
INVT	INVERTER

J

JATO	JET ASSIST TAKE-OFF
JCT	JUNCTION
JETT	JETTISON

L

LDG	LANDING
LDG/GR	LANDING GEAR
LE	LEADING EDGE
LEV	LEVELLING
LH	LEFT HAND
LIQDMTR	LIQUIDOMETER
LKG	LOCKING
LONGN	LONGERON
L/SW	LIMIT SWITCH
LT	LIGHT
LWR	LOWER

M

MAN.	MANUAL
MANF	MANIFOLD
M/CONT	MOMENTARY CONTACT
MECH	MECHANISM
MED	MEDIUM
MK	MARK
M/LDG/GR	MAIN LANDING GEAR
MOD	MODIFICATION
M/P	MEDIUM PRESSURE
MPI	MAGNETIC PARTICLE INSPECTION
MT	MOUNT
MTG	MOUNTING

N

N/GR	NOSE GEAR
N/LDG/GR	NOSE LANDING GEAR
NO.	NUMBER
NOZ	NOZZLE
N/WHL	NOSE WHEEL

O

O/PNL	OUTER PANEL
OPR	OPERATING, OR
ORF	ORIFICE
OUT.	OUTLET
OUTBD	OUTBOARD
O/W	OUTER WING
OXY	OXYGEN

P

P/B	PUSH-BUTTON
PED	PEDESTAL
PLG	PLUNGER
PNEU	PNEUMATIC
PNL	PANEL
POSN	POSITION
POSNG	POSITIONING
POT.	POTENTIOMETER
PRESRZTN	PRESSURIZATION
PRESS.	PRESSURE
PROC	PROCUREMENT
PROT	PROTECTOR
PSI	POUNDS PER SQUARE INCH
PUL	PULLEY
PWR	POWER
PWR/CTL	POWER CONTROL

Q

QUADT	QUADRANT

R

RD/HD	ROUNDHEAD
RDR	RADAR
RDR/RGE	RADAR RANGE
RECP	RECEPTACLE
RECR/XMTR	RECEIVER-TRANSMITTER
RED.	REDUCER, ING
REF	REFERENCE
REINF	REINFORCING, MENT
REL	RELEASE
REM	REMOVABLE
REPL	REPLACING
RES	RESISTANCE, ANT, ING
RESTR	RESTRICTOR
RET	RETURN
RETR	RETRACTABLE
RGLR	REGULATOR
RH	RIGHT HAND
RPM	REVOLUTIONS PER MINUTE
RSRVR	RESERVOIR
RTNG	RETAINING
RTNR	RETAINER
RUB.	RUBBER, ING
RUD	RUDDER
RV	RELIEF-VALVE

S

SAF	SAFETY
SECT.	SECTION
SEL	SELECTOR
SEQ	SEQUENCE, ING
SGL	SINGLE
SOL	SOLENOID
SOV	SHUT-OFF VALVE
SP	SINGLE-POLE
SPDT	SINGLE-POLE DOUBLE-THROW
SPEC	SPECIFICATION
SPG	SPRING
SPST	SINGLE-POLE SINGLE-THROW
ST	SINGLE-THROW
STA	STATION
STAB.	STABILIZER
STBD	STARBOARD
STEER.	STEERING
STGR	STRINGER
STIFF.	STIFFENER, ING
STR	STRAIGHT
STRUCT	STRUCTURE, AL
SUP.	SUPPORT, ING
SUPES	SUPERSEDES, ING
SUPLD	SUPPLIED
SUR	SURFACE
SUR/CTL	SURFACE CONTROL
SW	SWITCH
SWL	SWIVEL
SYNC	SYNCHRONOUS, IZER, ING
SYS	SYSTEM

T

TACH	TACHOMETER
TE	TRAILING EDGE
TEMP	TEMPERATURE
TERM.	TERMINAL
THD	THREAD
THERMOC	THERMOCOUPLE
THROT	THROTTLE

TOG.	TOGGLE
TOL	TOLERANCE
TRANS	TRANSFER
TRNBKL	TURNBUCKLE
TRUN	TRUNNION

U

UF	MICROFARAD
UNIV/J	UNIVERSAL JOINT
UNLKG	UNLOCKING
UP.	UPPER
UPLK	UPLOCK
U/SW	MICROSWITCH
UT	UTILITY
UW	UNDERWING

V

VAL	VALVE
VDC	VOLT DIRECT-CURRENT
VERT/STAB	VERTICAL STABILIZER
VHF	VERY HIGH FREQUENCY
VLG	VOLTAGE

W

W	WATT
W/CTR/SECT	WING CENTRE SECTION
WHL/W	WHEEL WELL
WNDSHLD	WINDSHIELD
WOP	WING OUTER PANEL
WRH	WRENCHING
WVG	WAVEGUIDE

XYZ

XMTR	TRANSMITTER
XRI	X-RAY INSPECTED, ION

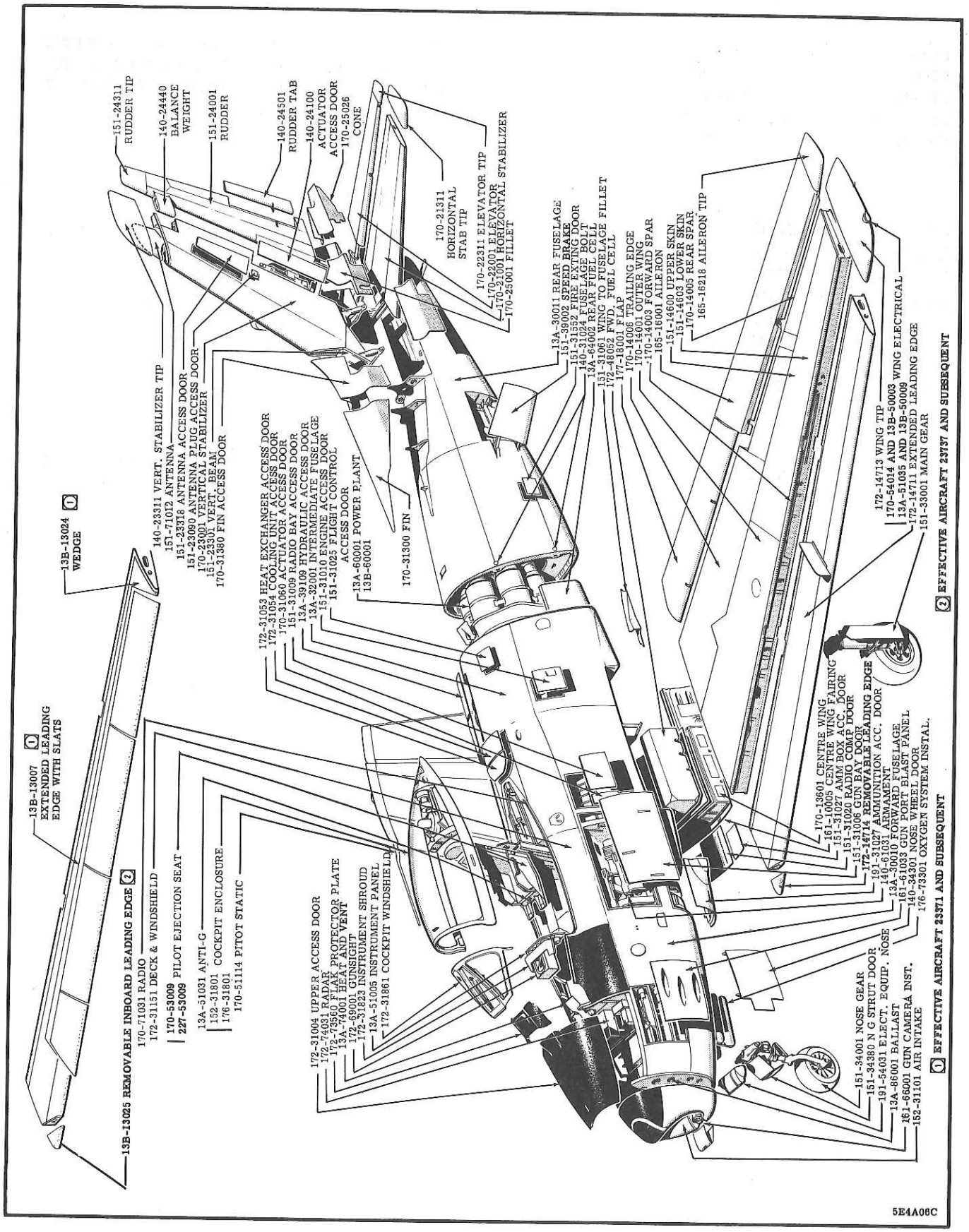

CHART 1 SABRE 5, 5A & 6 AIRCRAFT EXPLODED VIEW

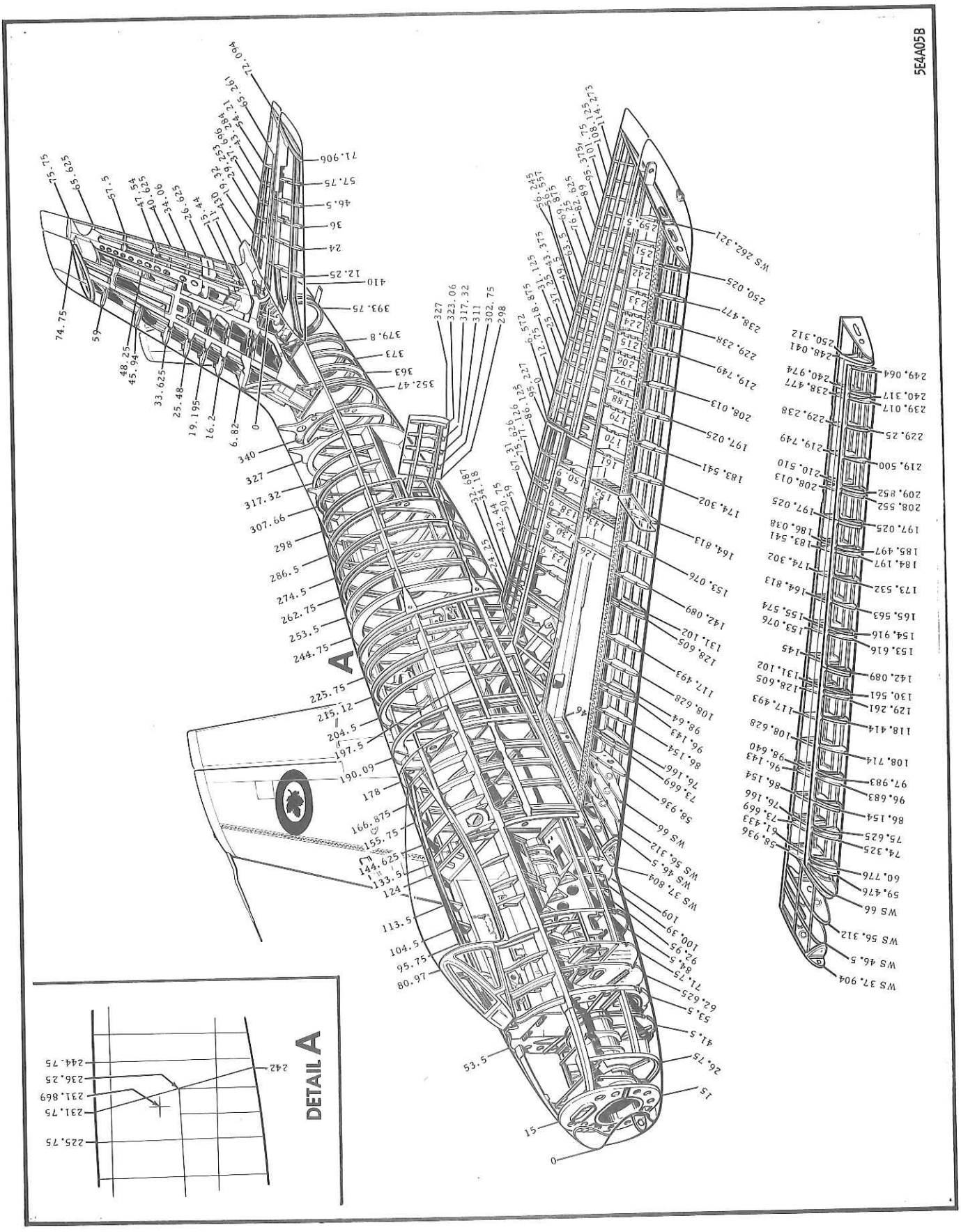

CHART 2 SABRE 5, 5A & 6 AIRCRAFT STATIONS

PART 2

GROUP ASSEMBLY PART LIST

TABLE OF CONTENTS

FIGURE	TITLE	PAGE
1	SABRE 5 & 6 AIRCRAFT GENERAL ASSEMBLY	28

SECTION	TITLE	PAGE
1	WING	31
2	EMPENNAGE	163
3	FUSELAGE	197
4	LANDING GEAR	429
5	POWER PLANT	509
6	FURNISHINGS EQUIPMENT	563
7	FLIGHT CONTROLS	593
8	INSTRUMENT EQUIPMENT	647
9	PITOT STATIC SYSTEM	675
10	ELECTRICAL EQUIPMENT	687
11	HYDRAULIC EQUIPMENT	835
12	FUEL SYSTEM	1027
13	OIL SYSTEM	1117
14	HEAT & VENT & PRESSURIZATION SYSTEM	1125
15	ANTI-ICING & DE-ICING SYSTEM	1149
16	ANTI-G SYSTEM	1171
17	OXYGEN SYSTEM	1177
18	RADIO EQUIPMENT	1183
19	RADAR EQUIPMENT	1201
20	ARMAMENT EQUIPMENT	1225
21	LOOSE EQUIPMENT	1269

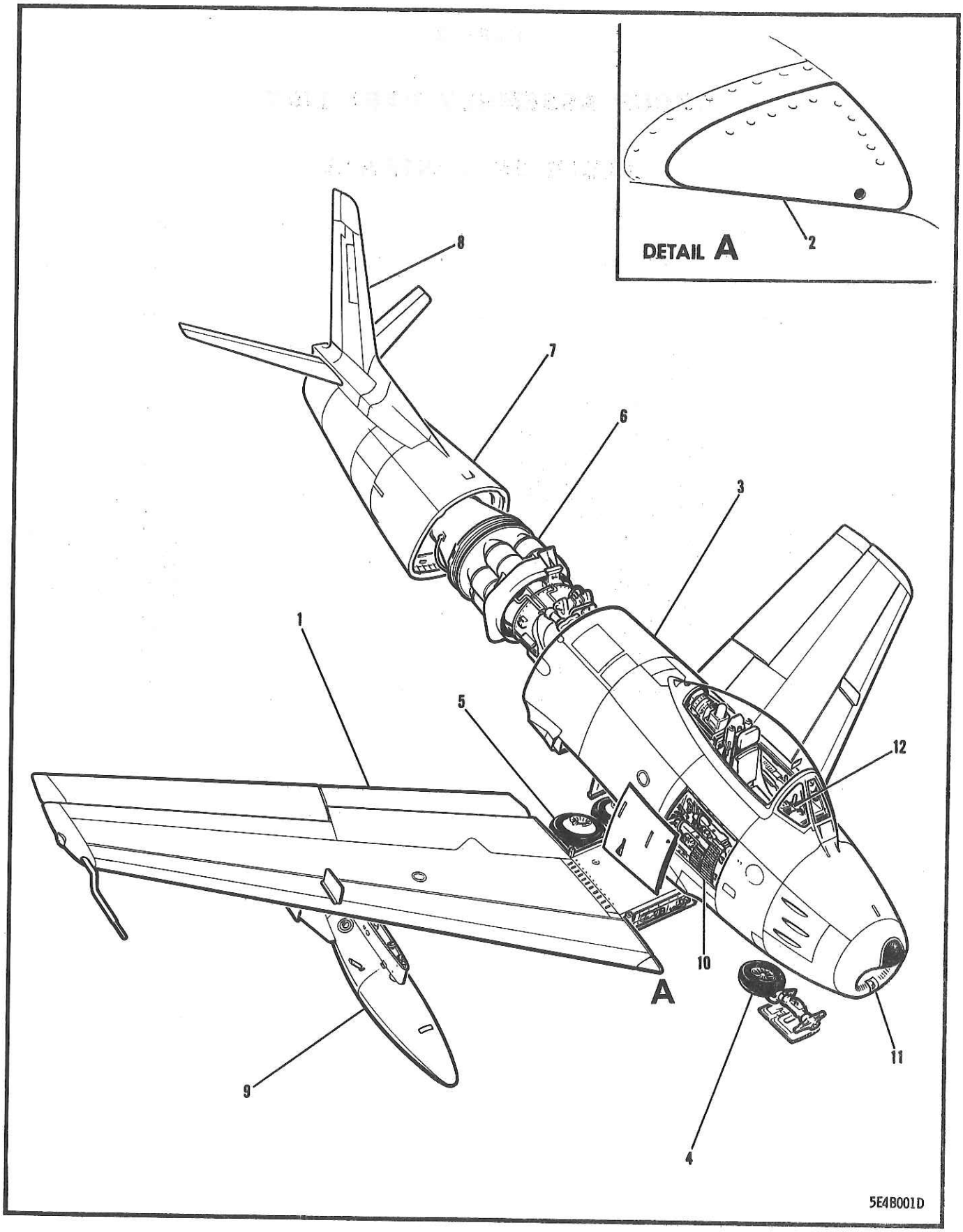

FIGURE 1 SABRE 5 & 6 AIRCRAFT GENERAL ASSEMBLY

FIGURE AND INDEX NUMBER	GROUP SABRE 5 & 6 AIRCRAFT MAJOR ASSEMBLY SABRE 5 & 6 AIRCRAFT GENERAL ASSEMBLY PART NUMBER	1234567 NOMENCLATURE	CODE	UNITS PER ASSY
1 -	13A-00001	GENERAL ASSY - SABRE 5 AIRCRAFT	001-030	1
	13A-00001-810	GENERAL ASSY - SABRE 5 AIRCRAFT	031-100	1
	13A-00001-804	GENERAL ASSY - SABRE 5 AIRCRAFT	101-200	1
	13A-00001-806	GENERAL ASSY - SABRE 5 AIRCRAFT	201-210	1
	13A-00001-808	GENERAL ASSY - SABRE 5 AIRCRAFT	211-300	1
	13A-00001-812	GENERAL ASSY - SABRE 5 AIRCRAFT	301-370	1
	13B-00001	GENERAL ASSY - SABRE 6 AIRCRAFT	371-	1
- 1	170-10001	•WING INSTL - COMPLETE (SEE SECTION 1)		REF
	13B-13025-1	•LEADING EDGE ASSY - PORT WOP EXTENDED INBOARD (REMOVABLE) (AS PER EO 05-5E-6A/160)		1
- 2	13B-13025-2	•LEADING EDGE ASSY - STARBOARD WOP EXTENDED INBOARD (REMOVABLE) (AS PER EO 05-5E-6A/160)		1
	AN3-6A	•BOLT - (REMOVABLE LEADING EDGE ATTACHING) (AS PER EO 05-5E-6A/160)		4
	NAS221-10	•SCREW - (REMOVABLE LEADING EDGE ATTACHING) (AS PER EO 05-5E-6A/160)		2
	AN960D10	•WASHER -		10
	13A-00001-20	•SHIM - (AS PER EO 05-5E-6A/160)		AR
	AN365-1032	•NUT - (AS PER EO 05-5E-6A/160)		4
	S-4538	•PLUG - (CAN)		2
- 3	13A-30001	•COVER INSTL - FUSELAGE COMPL (SEE SECT• 3)		REF
	13A-30010	••FUSELAGE ASSY - FWD SECTION (SEE SECT• 3)		REF
- 4	151-34001-10	•••GEAR INSTL - NOSE LANDING (SEE SECT• 4)		REF
	151-31792-1	•PLATE & ANGLE INSTL - WING FUS FILLET LH (SEE SECTION 3)		REF
	151-31792-2	•PLATE & ANGLE INSTL - WING FUS FILLET RH (SEE SECTION 3)		REF
- 5	151-33001-1	•GEAR INSTL - MAIN LANDING LH (SEE SECT• 4)		REF
	151-33001-2	•GEAR INSTL - MAIN LANDING RH (SEE SECT• 4)		REF
	151-33601-820	•EMERGENCY CONTROLS INSTL - LANDING GEAR (SEE SECTION 4)		REF
	13A-51001	•INSTRUMENT SYSTEM EQUIP• INSTL - COMPLETE (SEE SECTION 8)	001-582	REF
	13B-51005	•INSTRUMENT SYSTEM EQUIP• INSTL - COMPLETE (SEE SECTION 8)	583-	REF
	176-52001	•SURFACE CONTROLS INSTL - COMPLETE (SEE SECTION 7)		REF
	176-52032	•SURFACE CONTROLS INSTL - REAR FUSELAGE (SEE SECTION 7)		REF
- 6	13A-60001	•POWER PLANT INSTL - (ORENDA 10) (SEE SECTION 5)		REF
	13B-60001	•POWER PLANT INSTL - (ORENDA 14) (SEE SECTION 5)		REF
- 7	13A-00001-802	•SPARE FUSELAGE ASSY - REAR (SABRE 5) (SEE SECTION 3)		REF
	13B-00001-830	•SPARE FUSELAGE ASSY - REAR (SABRE 6) (SEE SECTION 3)		REF
- 8	170-20001	•EMPENNAGE INSTL - COMPLETE (SEE SECT• 2)		REF
	176-48201-101	•LOOSE EQUIP• INSTL - UW 200 GAL FUEL TANK (PACKAGE) PORT WING (SEE SECTION 12)		REF
	176-48201-102	•LOOSE EQUIP• INSTL - UW 200 GAL FUEL TANK (PACKAGE) STBD WING (SEE SECTION 12)		REF
- 9	176-48302-903	•TANK INSTL - 200 GAL UNDERWING FUEL PORT (SEE SECTION 12)		REF
	176-48302-904	•TANK INSTL - 200 GAL UNDERWING FUEL STBD (SEE SECTION 12)		REF
-10	140-61031	•ARMAMENT INSTL - 6 FIXED •50 CAL NOSE GUNS (SEE SECTION 20)		REF

FIGURE AND INDEX NUMBER	GROUP SABRE 5 & 6 AIRCRAFT MAJOR ASSEMBLY SABRE 5 & 6 AIRCRAFT GENERAL ASSEMBLY PART NUMBER	1234567 NOMENCLATURE	CODE	UNITS PER ASSY
1 -11	161-66001	•CAMERA INSTL - SHOCK MOUNTED GUN (SEE SECTION 20)		REF
	170-68701-50	•EMERGENCY JETTISON MECHANISM INSTL - (SEE SECTION 12)	001-210	REF
-12	172-69001	•SIGHT INSTL - GUN-BOMB-ROCKET TYPE A-4 (SEE SECTION 19)		REF
	170-71001	•RADIO EQUIP. INSTL - FUSELAGE (SEE SECTION 18)		REF
	13A-86001	•BALLAST INSTL - FUS STA 15 (SEE SECTION 3)	001-370	REF
	13-86022	•DATA INSTL - LOOSE EQUIPMENT & GENERAL (SEE SECTION 21)		REF
	13-96007-20	•TARGET RELEASE EQUIP. INSTL - TOW (SEE SECTION 20)	001-430	REF
	13A-96050	•SURFACE CONTROLS INSTL - MANUAL ALTERNATE CHANGE-OVER COMPLETE (SEE SECTION 7)	001-210	REF
	13A-49001	•MARKINGS - AIRCRAFT EXTERIOR	001-410	NP
	13A-49001-800	•MARKINGS - AIRCRAFT EXTERIOR	411-	NP
	151-00024	•SPECIFICATION - ACFT FINISH SABRE SERIES		NP
	152-00029	•DIAGRAM - FUSELAGE SEALING		NP
	13A-51002	•DIAGRAM - INSTRUMENT SYSTEM SCHEMATIC		NP
	13A-53000	•WIRING DIAGRAM - ELECTRICAL SCHEMATIC		NP
	13A-53001	•CHART - ELEC WIRING DIAGRAM ITEM & WIRE		NP
	13-53400	•DIAGRAM & CHARTS - ELECTRICAL CIRCUIT		NP
	13A-71001	•HYDRAULIC INSTL - COMPLETE		NP
	13A-71002	••SCHEMATIC DIAGRAM - HYDRAULIC UT RET SYS		NP
	13A-71003	••SCHEMATIC DIAGRAM - HYDRAULIC SUR CTL SYS		NP
	K13-054	•KIT - 6-3 EXTENDED SLATTED LE WITH SHORT TIP (AS PER EO 05-5E-6B/9)	E1	1
	K13-069	•KIT - 6-3 EXTENDED SLATTED LE WITH SHORT TIP (AS PER EO 05-5E-6B/9)	D1	1
	K13-069-801	•KIT - 6-3 EXTENDED SLATTED LE WITH SHORT TIP (AS PER EO 05-5E-6B/9) OR	D2	1
	K13-069-803	•KIT - 6-3 EXTENDED SLATTED LE WITH SHORT TIP (AS PER EO 05-5E-6B/9)	D2	
	K13-120	•KIT - ELEVATOR LINKAGE (SEE FIG. 26A)		REF
	172-48201-1	DROP TANK EQUIP. INSTL - 120 GALLON FUEL SYSTEM PORT (SEE SECTION 12)		REF
	172-48201-2	DROP TANK EQUIP. INSTL - 120 GALLON FUEL SYSTEM STARBOARD (SEE SECTION 12)		REF

-000-

SECTION 1

WING

TABLE OF CONTENTS

FIGURE	TITLE	PAGE
2	COMPLETE WING	32
3	CENTRE SECTION WING	36
4	CENTRE SECTION WING SKINS	40
5	CENTRE WING SECTION FAIRING	44
6	COMPLETE OUTER WING	48
7	OUTER WING ACCESS DOORS	54
8	OUTER WING INTERMEDIATE PANEL	58
9	OUTER WING PANEL BOX	62
10	OUTER WING PANEL BOX FORWARD SPAR	68
11	OUTER WING PANEL REAR SPAR	74
12	OUTER WING PANEL UPPER SKINS	78
13	OUTER WING PANEL LOWER SKINS	82
14	OUTER WING INBOARD TRAILING EDGE	86
15	OUTER WING EXTENDED LEADING EDGE (EFFECTIVE AIRCRAFT 23001 TO 23370 INCL)	94
16	OUTER WING EXTENDED LEADING EDGE SKINS & DOORS (EFFECTIVE AIRCRAFT 23001 TO 23370 INCL)	102
17	WING EXTENDED LEADING EDGE EMERGENCY PROVISIONS (EFFECTIVE AIRCRAFT 23001 TO 23210 INCL)	108
18	OUTER WING SLATTED LEADING EDGE (EFFECTIVE AIRCRAFT 23371 & SUBS)	112
19	OUTER WING SLATTED LEADING EDGE STRUCTURE (EFFECTIVE AIRCRAFT 23371 & SUBS)	118
19A	OUTER WING STA 130-248 SLATTED LE STRUCTURE (EFFECTIVE AIRCRAFT 23371 & SUBS)	124
20	OUTER WING SLATS (EFFECTIVE AIRCRAFT 23371 & SUBS)	130
21	WEDGE EXTENDED SLATTED LEADING EDGE TO TIP (EFFECTIVE AIRCRAFT 23371 & SUBS)	138
22	WING EXTENDED LEADING EDGE TIP	140
23	OUTER WING FLAP	142
24	OUTER WING AILERON	150
25	AILERON COUNTERBALANCE & SEAL	156

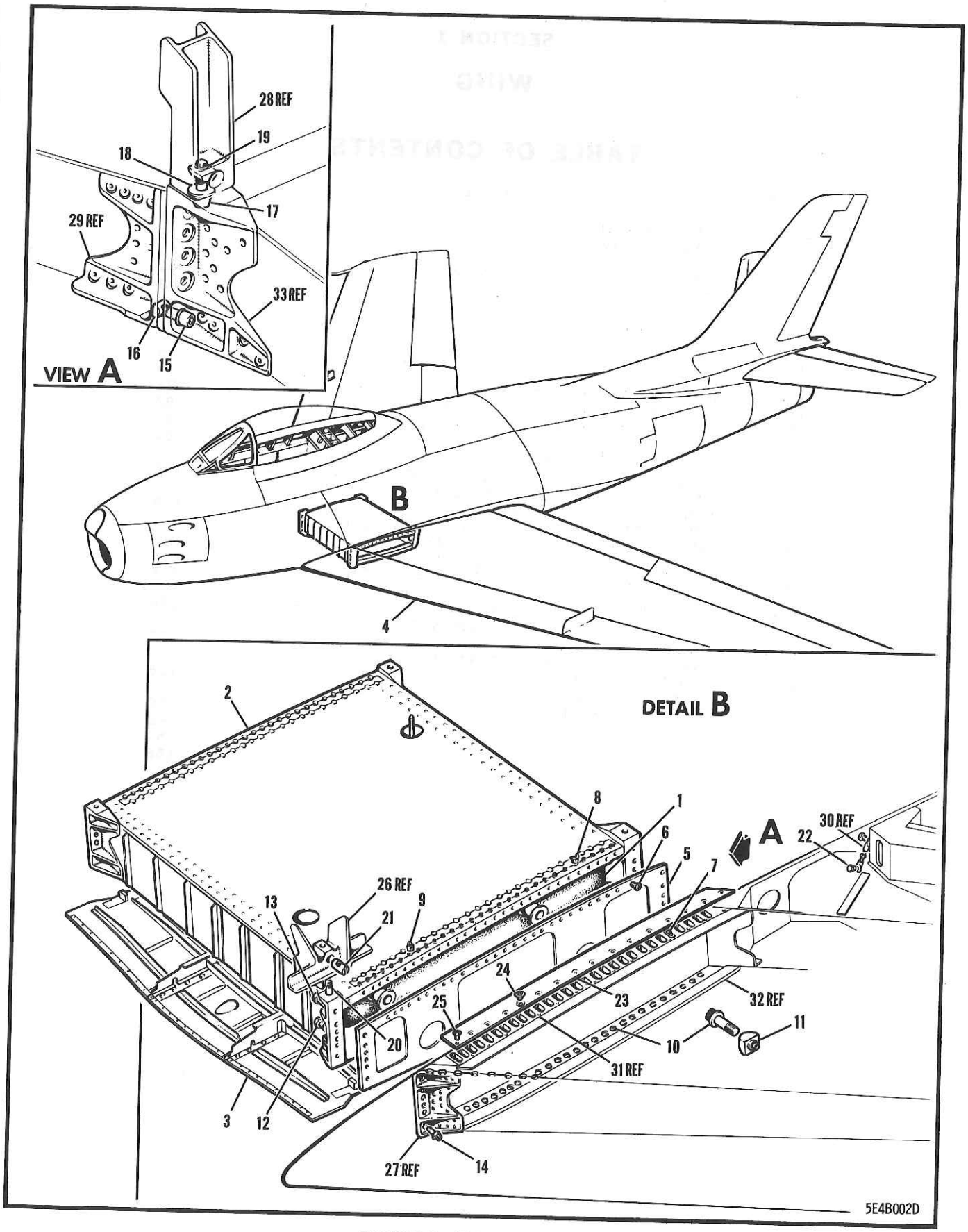

FIGURE 2 COMPLETE WING

FIGURE AND INDEX NUMBER	GROUP	WING	CODE	UNITS PER ASSY
	MAJOR ASSEMBLY	COMPLETE WING		
	PART NUMBER	1234567 NOMENCLATURE		
2 -	170-10001	WING INSTL - COMPLETE (SEE FIG. 1)		NP
	170-13601-801	.WING ASSY - INTERMEDIATE CENTRE SECTION		1
	170-13601-805	.SPARE PART FOR 170-13601-801 (COMPLETE WITH RIB ASSY 151-13039-1 & -2 & ATTACHING PARTS)		
- 1	172-48013	..FUEL SYSTEM EQUIP. INSTL - CENTRE WING (SEE SECTION 12)		REF
	176-51013	..INSTRUMENT EQUIP. INSTL - WING CTR SECT. (SEE SECTION 8)		REF
	170-52013	..SURFACE CONTROL INSTL - WING CTR SECTION (SEE SECTION 7)		REF
	172-58066-800	..HYDRAULIC EQUIP. INSTL - WING CTR SECTION (SEE SECTION 11)		REF
- 2	170-13001-61	..WING ASSY - CENTRE SECTION (SEE FIG. 3)		REF
- 3	161-10005	.FAIRING ASSY - CENTRE WING COMPLETE (SEE FIG. 5)		REF
- 4	170-14001-803	.WING ASSY - OUTER PANEL COMPLETE PORT (SEE FIG. 6)		REF
	170-14001-804	.WING ASSY - OUTER PANEL COMPLETE STARBOARD (SEE FIG. 6)		REF
- 5	151-13039-1	.RIB ASSY - WING CENTRE SECTION BP 29 PORT		1
	151-13039-2	.RIB ASSY - WING CENTRE SECTION BP 29 STBD		1
- 6	AN520-416R7	.SCREW -		8
- 7	2319-27	.BOLT - (TPI) (ACFT HIGH TENSILE)(UPPER)		58
		OR		
	TP2319-27	.BOLT - (TPI) (HIGH TENSILE)		
		OR		
	VS2319-27	.BOLT - (VOI) (HIGH TENSILE) (UPPER)		
		OR		
	EWB-18-7-14	.BOLT - 12-POINT EXTERNAL WRH (SPS) (UPPER)		
- 8	2034-070	.BARREL-NUT - (ESN)		52
		OR		
	32-1453-070	.BARREL-NUT - (ESN)		
- 9	2033-070	.BARREL-NUT - (ESN)		6
		OR		
	32-1454-070	.BARREL-NUT - (ESN)		
-10	2320-30	.BOLT - (TPI) (ACFT HIGH TENSILE (LOWER)		58
		OR		
	TP2320-30	.BOLT - (TPI) (HIGH TENSILE) (LOWER)		
		OR		
	VS2320-30	.BOLT - (VOI) (HIGH TENSILE) (LOWER)		
		OR		
	EWB-18-8-17	.BOLT - 12-POINT EXTERNAL WRH (SPS) (LOWER)		
-11	32-1451-080	.BARREL-NUT - (ESN)		50
	S-1452-080	.BARREL-NUT - HIGH TENSILE (ESN) (9/16-18) (AS PER EO 05-5E-6B/7)		8
-12	AN8-16A	.BOLT - MPI		6
	MS20002-8	.WASHER - HIGH STRENGTH PLAIN		6
		OR		
	NAS143-8	.WASHER -		
	AN365-820	.NUT -		6
-13	AN9-16A	.BOLT - MPI		10
	MS20002-9	.WASHER - HIGH STRENGTH PLAIN		4
		OR		
	NAS143-9	.WASHER -		
	AN365-918	.NUT -		10
-14	NAS149-30	.BOLT - MPI		4
	MS20002-9	.WASHER - HIGH STRENGTH PLAIN		2
		OR		
	NAS143-9	.WASHER -		
	AN365-918	.NUT -		4
-15	NAS149-32	.BOLT - MPI		4
-16	S-1452-098	.BARREL-NUT - HIGH TENSILE (ESN) (9/16-18)		4

FIGURE AND INDEX NUMBER	GROUP WING MAJOR ASSEMBLY COMPLETE WING PART NUMBER	1234567 NOMENCLATURE	CODE	UNITS PER ASSY
2 -17	NAS152-37	•BOLT - MPI		2
-18	140-14183	•WASHER - W/CTR/SECT TO FUS ATT REAR BOLT		2
-19	32-1452-126	•BARREL-NUT - HIGH TENSILE (ESN)		2
-20	NAS152-37DH	•BOLT - MPI		2
-21	117-31923	•NUT - ENGINE MOUNT TO FUS UPPER ATTACHING		2
-22	AN4H7	•BOLT - MPI (LDG/GR BEAM TO FUSELAGE ATT)		2
	AN365-428	•NUT -		2
-23	151-14085-1	•PLATE - WING CENTRE SECTION TO OUTER PORT JOINT UPPER COVER		1
	151-14085-2	•PLATE - WING CENTRE SECTION TO OUTER STBD JOINT UPPER COVER		1
-24	S•P•1561-8-32-8	•SEMS - FAIRING WASHER (SHI)		30
-25	AN507-832R8	•SCREW -		2
-26	151-31216-1	FITTING - FUSELAGE STA 131 TO 133 PORT WING FORWARD ATT (SEE SECTION 3)		REF
-27	151-14047-3	FITTING - FORWARD SPAR PORT ATTACHING (SEE FIG• 10)		REF
-28	151-31690-3	FITTING - FUSELAGE STA 178-180 PORT WING REAR ATTACHING (SEE SECTION 3)		REF
-29	172-14049-3	FITTING - REAR SPAR PORT ATTACHING (SEE FIG• 11)		REF
-30	140-14166-5	TERMINAL - PORT MAIN GEAR BEAM TO FUSELAGE TRNBKL ATT (SEE FIG• 6)		REF
-31	140-14076-1	FITTING ASSY - PORT W/CTR/SECT TO WOP UPPER OUTBOARD SPLICE (SEE FIG• 9)		REF
-32	140-14077-3	FITTING - PORT W/CTR/SECT TO WOP LWR OUTBD SPLICE (SEE FIG• 9)		REF
-33	152-13028-7	FITTING - CTR/W REAR SPAR TO FUS ATT LH (SEE FIG• 3)		REF
		(CONTINUED SEE FIG• 5)		

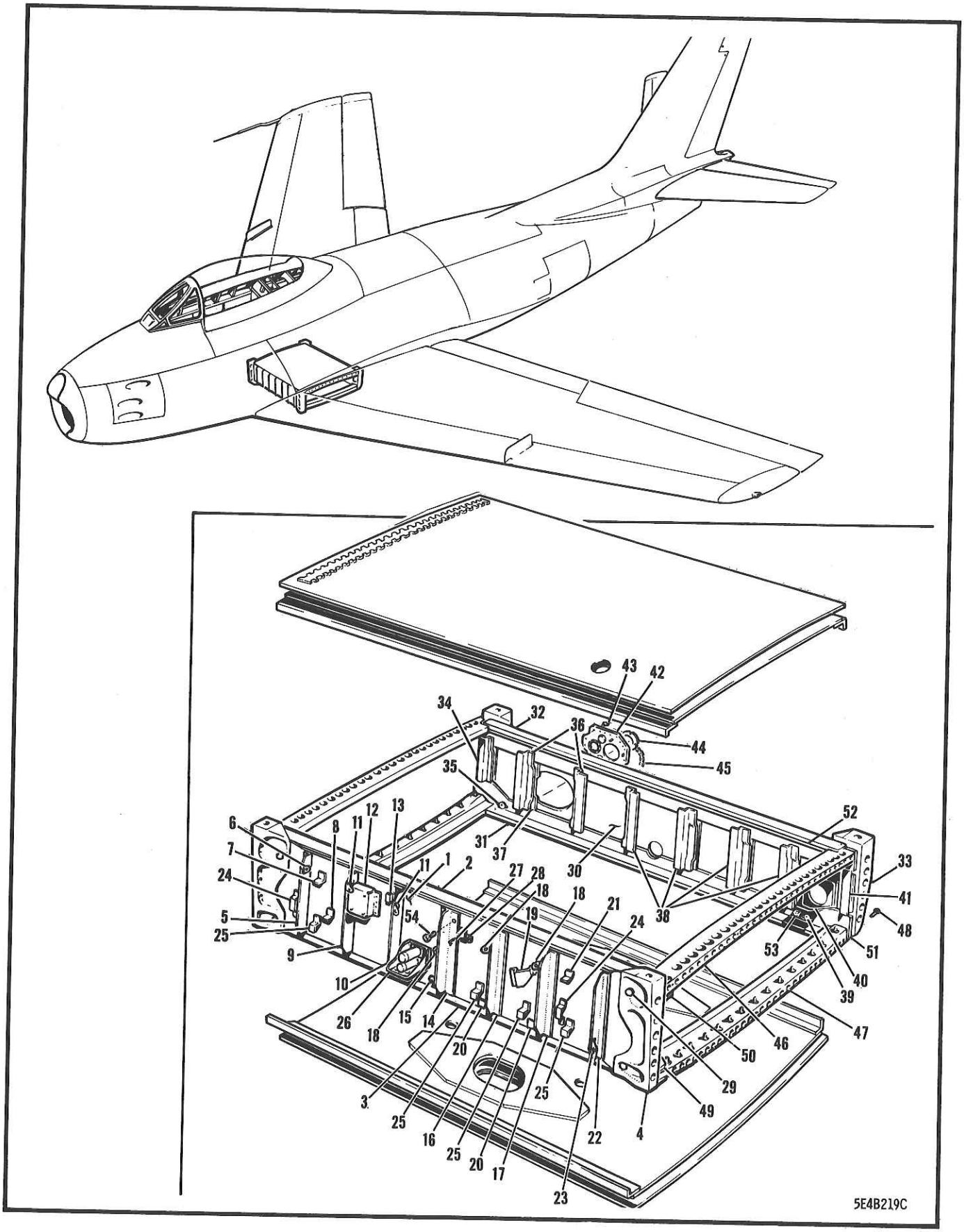

5E4B219C

FIGURE 3 CENTRE SECTION WING

FIGURE AND INDEX NUMBER	GROUP WING MAJOR ASSEMBLY CENTRE SECTION WING PART NUMBER	1234567 NOMENCLATURE	CODE	UNITS PER ASSY
3 -	170-13001-61	WING ASSY - CENTRE SECTION (SEE FIG. 2)		1
	170-13003-21	•SPAR ASSY - CENTRE WING FORWARD		1
- 1	170-13003-23	••WEB - CENTRE WING FORWARD SPAR		1
- 2	170-13003-5	••CAP - CENTRE WING FORWARD SPAR UPPER		1
- 3	170-13003-7	••CAP - CENTRE WING FORWARD SPAR LOWER		1
	170-13003-15	••SHIM - CENTRE WING FORWARD SPAR		1
- 4	152-13027-3	••FITTING - FORWARD SPAR TO FUSELAGE ATT LH		1
	152-13027-4	••FITTING - FORWARD SPAR TO FUSELAGE ATT RH		1
	2R3-8-5	••PIN - FLAT-HEAD HI-SHEAR RIVET (NAA)		14
	2R3-8-6	••PIN - FLAT-HEAD HI-SHEAR RIVET (NAA)		16
	2R3-8-7	••PIN - FLAT-HEAD HI-SHEAR RIVET (NAA)		8
	2R3-12-7	••PIN - FLAT-HEAD HI-SHEAR RIVET (NAA)		4
	2R4-8	••COLLAR - HI-SHEAR RIVET (NAA)		38
	2R4-12	••COLLAR - HI-SHEAR RIVET (NAA)		4
- 5	170-13003-35	••ANGLE - CENTRE WING FORWARD SPAR (MAKE FROM 1E129 X 9-3/8 (NAA))		1
- 6	2C12-3	••CLIP - (NAA) (RH)		1
- 7	172-58208	••CLIP - HYDRAULIC FITTING SUPPORT CTR WING (MAKE FROM AND10134 X 1-1/4)		1
- 8	172-58102	••SUPPORT - HYDRAULIC POWER CTL PRESSURE TRANSMITTER HOSE		1
- 9	170-13003-29	••ANGLE - CENTRE WING FORWARD SPAR (MAKE FROM 1E129 X 9-3/8 (NAA))		1
-10	170-13003-9	••ANGLE - CENTRE WING FORWARD SPAR (MAKE FROM 1E129 X 9-3/8 (NAA))		1
-11	2C12	••CLIP - (NAA) (ELECTRICAL HARNESS)		2
-12	172-58101	••BRACKET ASSY - HYDRAULIC POWER CONTROL BY-PASS VALVE		1
-13	172-54084	••BRACKET ASSY - WING SPAR ELEC WIRING ATT		1
-14	170-13003-13	••ANGLE - CENTRE WING FORWARD SPAR (MAKE FROM AND10136-200 X 9-3/8)		1
-15	2C12	••CLIP - (NAA) (ELECTRICAL HARNESS)		1
-16	170-13003-17	••ANGLE - CENTRE WING FORWARD SPAR (MAKE FROM 1E129 X 9-3/8 (NAA))		1
-17	170-13003-19	••ANGLE - CENTRE WING FORWARD SPAR (MAKE FROM 1E129 X 9-3/8 (NAA))		1
-18	2C12-1	••CLIP - (NAA) (ELECTRICAL HARNESS)		3
-19	172-58110	••BRACKET ASSY - HYDRAULIC FLIGHT CONTROL RELIEF-VALVE		1
-20	2C33	••CLIP - (NAA) (WIRE BUNDLE)		2
	AN520-10R8	••SCREW - (CLIP ATTACHING)		2
	AN365-1032	••NUT -		2
-21	2C29-8	••CLIP - (NAA) (ELECTRICAL HARNESS)		1
-22	170-13003-25	••ANGLE - CENTRE WING FORWARD SPAR (MAKE FROM 1E129 X 9-3/8 (NAA))		1
-23	2C12	••CLIP - (NAA) (ELECTRICAL HARNESS) OR		1
	2C38-2	••CLIP - (NAA) (ELECTRICAL HARNESS)		
-24	170-58118	•BRACKET ASSY - HYDRAULIC BY-PASS PRESSURE SWITCH SUPPORTING		2
-25	170-58166	•CLIP ASSY - CENTRE WING FWD SPAR HYD SUP.		4
	191-51113	•BRACKET ASSY - HYDRAULIC PRESS. XMTR SUP.		1
-26	191-51113-3	••BRACKET - HYDRAULIC PRESSURE TRANSMITTER		1
	809-2	••MOUNT - MET-L-FLEX UNIT PLATE TYPE (RAI)		4
	NAS221-10	•SCREW - (UPPER SURFACE)	001-200	6
	NAS221-10	•SCREW - (UPPER SURFACE)	201-	10
	170-13001-7	•LOCATOR - WING CENTRE SECTION		2
	NAS221-9	•SCREW - (LOWER SURFACE)	001-200	6
	NAS221-9	•SCREW - (LOWER SURFACE)	201-	10
-27	AN4-10A	•BOLT -		1

FIGURE AND INDEX NUMBER	GROUP WING MAJOR ASSEMBLY CENTRE SECTION WING PART NUMBER	1234567 NOMENCLATURE	CODE	UNITS PER ASSY
3 -	AN4-11A	•BOLT -		5
-28	170-58166-3	•CLIP ASSY - CENTRE WING SPAR HYD SUPPORT		1
-29	AN6-11A	•BOLT -		4
	AN365-624	•NUT -		4
	151-13005-21	•SPAR ASSY - CENTRE WING REAR		1
-30	151-13005-29	••WEB - CENTRE WING REAR SPAR		1
-31	151-13005-7	••ANGLE - CENTRE WING REAR SPAR CAP (LOWER)		1
-32	151-13005-5	••ANGLE - CENTRE WING REAR SPAR CAP (UPPER)		1
-33	152-13028-7	••FITTING - CENTRE WING REAR SPAR TO FUS ATTACHING LH		1
	152-13028-8	••FITTING - CENTRE WING REAR SPAR TO FUS ATTACHING RH		1
	2R3-8-5	••PIN - FLAT-HEAD HI-SHEAR RIVET (NAA)		8
	2R3-8-6	••PIN - FLAT-HEAD HI-SHEAR RIVET (NAA)		4
	2R3-12-7	••PIN - FLAT-HEAD HI-SHEAR RIVET (NAA)		8
	2R4-8	••COLLAR - HI-SHEAR RIVET (NAA)		12
	2R4-12	••COLLAR - HI-SHEAR RIVET (NAA)		8
-34	151-13005-14	••STIFFENER - CENTRE WING REAR SPAR (STARBOARD SIDE)		1
	151-13005-17	••SPACER - CENTRE WING REAR SPAR		1
-35	AN6-10A	••BOLT - MPI (FITTING TO ANGLE ATTACHING)		1
	AN960D616	••WASHER -		1
-36	151-13005-23	••STIFFENER - CENTRE WING REAR SPAR		2
-37	151-13005-25	••SPACER - CENTRE WING REAR SPAR		1
-38	151-13005-9	••STIFFENER - CENTRE WING REAR SPAR		4
	151-13005-19	••SPACER - CENTRE WING REAR SPAR		5
-39	AN6-10A	••BOLT - MPI (FITTING TO ANGLE ATTACHING)		1
	AN960D616	••WASHER -		1
-40	151-13005-27	••DOUBLER - CTR/W REAR SPAR INTERCONN ACC		1
-41	151-13005-13	••STIFFENER - CENTRE WING REAR SPAR		1
	151-13005-17	••SPACER - CENTRE WING REAR SPAR		1
	170-13001-809	•SHIM - 1-1/4 X 3-7/8 IN. MPS184-10 (GAP BETWEEN 151-13005-7 ANGLE & 140-13030-1 & -2 FITTING ASSY)		AR
-42	151-13038-21	•DOOR ASSY - CTR/W REAR SPAR INTERCONNECTOR FITTING ACCESS		1
	151-13038-9	••DOOR - CTR/W INTERCONNECTOR FTG ACCESS		1
	151-13038-5	••RETAINER - CENTRE WING INTERCONNECTOR FITTING ACCESS DOOR		1
	151-13038-7	••SEAL - CENTRE WING INTERCONNECTOR FITTING ACCESS DOOR		1
	48166	••BUTTON - STANDARD TYPE PLUG (UCF)		1
	9C1-1-5	••SAFETY-CHAIN - (NAA)		1
-43	NAS221-13	•SCREW - (DOOR ATTACHING)		20
-44	151-13043	•COVER - REAR SPAR FUEL LEVEL XMTR DUST		1
	AN520-10-8	•SCREW - (COVER ATTACHING)		3
-45	9C1-3-10	•CHAIN - BEAD (NAA)		1
	AN515-4-6	•SCREW - (CHAIN ATTACHING)		1
	AN365-440	•NUT -		1
-46	140-13029-21	•FITTING ASSY - CENTRE WING TO PORT OUTER PANEL UPPER INBOARD SPLICE		1
	140-13029-22	•FITTING ASSY - CENTRE WING TO STARBOARD OUTER PANEL UPPER INBOARD SPLICE		1
-47	140-13030-1	•FITTING ASSY - CENTRE WING TO PORT OUTER PANEL LOWER INBOARD SPLICE		1
	140-13030-2	•FITTING ASSY - CENTRE WING TO STARBOARD OUTER PANEL LOWER INBOARD SPLICE		1
-48	140-13033-3	•SHEAR-PIN - CTR/W REAR SPAR FUS ATT FTG		1
-49	151-13021	•ANGLE ASSY - LOWER SKIN TO FWD SPAR ATT		1
-50	151-13020	•ANGLE ASSY - UPPER SKIN TO FWD SPAR ATT		1

FIGURE AND INDEX NUMBER	GROUP WING MAJOR ASSEMBLY CENTRE SECTION WING PART NUMBER	1234567 NOMENCLATURE	CODE	UNITS PER ASSY
3 -51	151-13023	•ANGLE ASSY - LOWER SKIN TO REAR SPAR ATT		1
-52	151-13022	•ANGLE ASSY - UPPER SKIN TO REAR SPAR ATT		1
-53	AN6-10A	•BOLT -		2
	AN960D616	•WASHER -		2
	AN365-624	•NUT -		2
-54	AN4-7A	•BOLT - (ANGLE TO FORWARD SPAR ATTACHING)		16
	AN960-416	•WASHER -		16
	AN365-428	•NUT -		16
	AN7510-1	•PLATE -		1
		(CONTINUED SEE FIG. 4)		

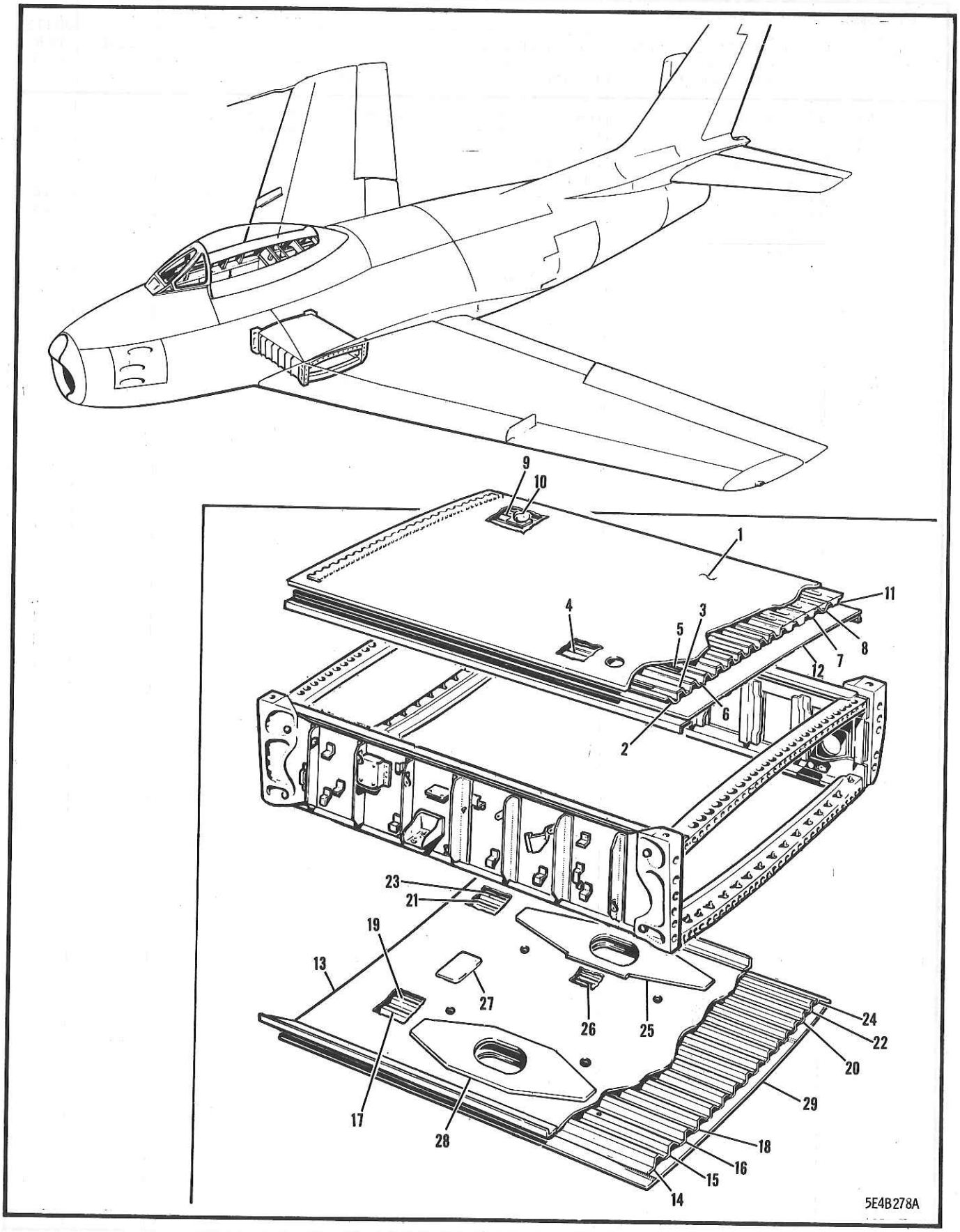

FIGURE 4 CENTRE SECTION WING SKINS

FIGURE AND INDEX NUMBER	GROUP WING MAJOR ASSEMBLY CENTRE SECTION WING SKINS PART NUMBER	1234567 NOMENCLATURE	CODE	UNITS PER ASSY
4 -	170-13001-61	WING ASSY - CENTRE SECTION (SEE FIG. 3)		REF
	151-13116-101	•SKIN ASSY - WING CENTRE SECTION UPPER		1
- 1	151-13116-3	••SKIN - CENTRE WING UPPER OUTER		1
- 2	151-13116-9	••STRINGER - CENTRE WING UPPER (MAKE FROM 6E141 X 52 (NAA))		1
- 3	151-13116-25	••STRINGER - CENTRE WING UPPER (MAKE FROM 6E141 X 12-3/4 (NAA))		1
- 4	151-13116-17	••STRINGER - CENTRE WING UPPER (MAKE FROM 6E141 X 36-3/4 (NAA))		1
	151-13116-27	••SHIM - (FUEL TRANSFER LINE)		1
- 5	140-13036-1	••BAR - CENTRE WING FUEL TRANSFORMER LINE HOLE REINFORCING		2
	2R3-6-4	••PIN - FLAT-HEAD HI-SHEAR RIVET (NAA) (ATTACHING FUEL HOLE SHIM)		4
	2R3-6-5	••PIN - FLAT-HEAD HI-SHEAR RIVET (NAA) (ATTACHING FUEL HOLE SHIM)		4
	2R3-6-6	••PIN - FLAT-HEAD HI-SHEAR RIVET (NAA) (ATTACHING FUEL HOLE SHIM)		4
	2R3-6-7	••PIN - FLAT-HEAD HI-SHEAR RIVET (NAA) (ATTACHING FUEL HOLE SHIM)		4
	2R3-6-8	••PIN - FLAT-HEAD HI-SHEAR RIVET (NAA) (ATTACHING FUEL HOLE SHIM)		14
	2R4-6	••COLLAR - HI-SHEAR RIVET (NAA) (ATTACHING FUEL HOLE SHIM)		30
- 6	151-13116-15	••STRINGER - CENTRE WING UPPER (MAKE FROM 6E141 X 52 (NAA))		1
	2R3-8-4	••PIN - FLAT-HEAD HI-SHEAR RIVET (NAA)		38
	2R3-8-6	••PIN - FLAT-HEAD HI-SHEAR RIVET (NAA)		30
	2R3-8-5	••PIN - FLAT-HEAD HI-SHEAR RIVET (NAA)		60
	2R4-8	••COLLAR - HI-SHEAR RIVET (NAA)		128
	151-13116-7	••STRINGER - CENTRE WING UPPER (MAKE FROM 6E141 X 52 (NAA))		7
	151-13041-3	••STRINGER - CENTRE WING UPPER (MAKE FROM 6E178 X 51-7/8 (NAA))		2
- 7	151-13040-9	••STRINGER - CENTRE WING UPPER (MAKE FROM 6E178 X 51-7/8 (NAA))		1
- 8	151-13116-19	••STRINGER - CENTRE WING UPPER (MAKE FROM 6E141 X 36-3/4 (NAA))		1
- 9	151-13116-23	••STRINGER - CENTRE WING UPPER (MAKE FROM 6E141 X 12-3/4 (NAA))		1
-10	151-13116-27	••SHIM - (FUEL TRANSFER LINE)		1
	2R3-6-4	••PIN - FLAT-HEAD HI-SHEAR RIVET (NAA) (ATTACHING FUEL HOLE SHIM)		12
	2R4-6	••COLLAR - HI-SHEAR RIVET (NAA) (ATTACHING FUEL HOLE SHIM)		12
-11	151-13040-7	••STRINGER - CENTRE WING UPPER (MAKE FROM 6E178 X 51-7/8 (NAA))		1
	2R3-10-20	••PIN - FLAT-HEAD HI-SHEAR RIVET (NAA)		8
	2R3-10-21	••PIN - FLAT-HEAD HI-SHEAR RIVET (NAA)		8
	2R3-10-22	••PIN - FLAT-HEAD HI-SHEAR RIVET (NAA)		8
	2R3-10-23	••PIN - FLAT-HEAD HI-SHEAR RIVET (NAA)		8
	2R4-10	••COLLAR - HI-SHEAR RIVET (NAA)		32
	151-13116-13	••SHIM - CENTRE WING UPPER OUTER SKIN		1
-12	151-13116-33	••SKIN - CENTRE WING UPPER INNER		1
	151-13116-29	••DOUBLER - CENTRE WING INNER		2
	151-13042-3	••PAD - CTR/W FUEL CELL COMPRESSOR TUBE		1
	NAS222-12	••SCREW -		22
	NAS222-11	••SCREW -		22
	NAS222-12	••SCREW -		44
	22G1-048-J8-4	••GANG CHANNEL ASSY - STRAIGHT (ESN)		22

FIGURE AND INDEX NUMBER	GROUP WING MAJOR ASSEMBLY CENTRE SECTION WING SKINS PART NUMBER	1234567 NOMENCLATURE	CODE	UNITS PER ASSY
4 -	151-13009-201	•SKIN ASSY - WING CENTRE SECTION LOWER		1
-13	151-13009-73	••SKIN - CENTRE WING LOWER INNER		1
	NAS222-11	••SCREW -		60
	NAS222-12	••SCREW -		60
	22G1-048-J8-4	••GANG CHANNEL ASSY - STRAIGHT (ESN)		30
-14	151-13009-6	••STRINGER - CENTRE WING LOWER (MAKE FROM 6E141 X 46-3/8 (NAA))		1
-15	151-13009-69	••STRINGER - CENTRE WING LOWER (MAKE FROM 6E141 X 46-3/8 (NAA))		1
	151-13009-57	••STRIP - CENTRE WING LOWER		1
-16	151-13009-15	••STRINGER - CENTRE WING LOWER (MAKE FROM 6E141 X 17-13/16 (NAA))		1
-17	151-13009-13	••STRINGER - CENTRE WING LOWER (MAKE FROM 6E141 X 19-1/2 (NAA))		1
-18	151-13009-16	••STRINGER - CENTRE WING LOWER (MAKE FROM 6E141 X 17-13/16 (NAA))		1
-19	151-13009-14	••STRINGER - CENTRE WING LOWER (MAKE FROM 6E141 X 19-1/2 (NAA))		1
	151-13009-70	••STRINGER - CENTRE WING LOWER (MAKE FROM 6E141 X 46-3/8 (NAA))		1
	AN23A27	••BOLT - (REINFORCING BSTR PUMP ACC HOLE)		16
	4S4D6-30	••SPACER - RIVET (NAA) (BOOSTER PUMP ACCESS HOLE REINFORCING)		3
	4S4D6-28	••SPACER - RIVET (NAA) (BOOSTER PUMP ACCESS HOLE REINFORCING)		6
	4S4D6-27	••SPACER - RIVET (NAA) (BOOSTER PUMP ACCESS HOLE REINFORCING)		3
	4S4D6-25	••SPACER - RIVET (NAA) (BOOSTER PUMP ACCESS HOLE REINFORCING)		4
	AN960D10	••WASHER - (BOOSTER PUMP ACCESS HOLE REINF)		16
	AN365-1032	••NUT - (BOOSTER PUMP ACCESS HOLE REINF)		16
	151-13009-5	••STRINGER - CENTRE WING LOWER (MAKE FROM 6E141 X 61-3/8 (NAA))		5
	151-13009-9	••STRINGER - CENTRE WING LOWER (MAKE FROM 6E141 X 46-3/8 (NAA))		1
	151-13009-71	••STRINGER - CENTRE WING LOWER (MAKE FROM 6E141 X 46-3/8 (NAA))		1
	151-13009-72	••STRINGER - CENTRE WING LOWER (MAKE FROM 6E141 X 46-3/8 (NAA))		1
	151-13009-67	••STRIP - CENTRE WING LOWER OUTER SKIN		1
-20	151-13009-44	••STRINGER - CENTRE WING LOWER (MAKE FROM 6E141 X 19-1/2 (NAA))		1
-21	151-13009-43	••STRINGER - CENTRE WING LOWER (MAKE FROM 6E141 X 19-1/2 (NAA))		1
-22	151-13009-42	••STRINGER - CENTRE WING LOWER (MAKE FROM 6E141 X 19-1/2 (NAA))		1
-23	151-13009-41	••STRINGER - CENTRE WING LOWER (MAKE FROM 6E141 X 19-1/2 (NAA))		1
-24	151-13009-25	••STRIP - CENTRE WING LOWER OUTER SKIN		1
-25	151-13009-66	••DOUBLER - CENTRE WING REAR BOOSTER PUMP INNER SKIN		1
	151-13009-56	••DOUBLER - CENTRE WING REAR BOOSTER PUMP OUTER SKIN		1
-26	151-13009-17	••ANGLE - CENTRE WING LOWER INNER SKIN (REINFORCING FUEL DRAIN HOLE)		1
	151-13009-18	••ANGLE - CENTRE WING LOWER INNER SKIN (REINFORCING FUEL DRAIN HOLE)		1
-27	151-13042-5	••PAD - CTR/W FUEL CELL COMPRESSOR TUBE		1
-28	151-13009-55	••DOUBLER - CENTRE WING FORWARD BOOSTER PUMP INNER SKIN		1

FIGURE AND INDEX NUMBER	GROUP WING MAJOR ASSEMBLY CENTRE SECTION WING SKINS PART NUMBER	1234567 NOMENCLATURE	CODE	UNITS PER ASSY
4 -	151-13009-65	••DOUBLER - CENTRE WING FORWARD BOOSTER PUMP OUTER SKIN		1
-29	151-13009-54	••SKIN - CENTRE WING LOWER OUTER		1
	151-13009-61	••BRACE - CENTRE WING LOWER OUTER SKIN (PORT SIDE)		1
	151-13009-62	••BRACE - CENTRE WING LOWER OUTER SKIN (STARBOARD SIDE)		1
	151-48121-1	••GUARD ASSY - CENTRE WING FUEL DRAIN (PORT SIDE)		1
	151-48121-2	••GUARD ASSY - CENTRE WING FUEL DRAIN (STARBOARD SIDE)		1
	161-54034	••CLIP ASSY - ELECTRICAL TERMINAL STRIP		2
	151-48120	••PLATE - CENTRE WING FUEL DRAIN GUARD		1
	2C20	••CLIP - (NAA) (PORT SIDE)		2
	2C20-1	••CLIP - (NAA) (STARBOARD SIDE)		2
	2R3-8-4	••PIN - FLAT-HEAD HI-SHEAR RIVET (NAA)		38
	2R3-8-5	••PIN - FLAT-HEAD HI-SHEAR RIVET (NAA)		60
	2R3-8-6	••PIN - FLAT-HEAD HI-SHEAR RIVET (NAA)		30
	2R4-8	••COLLAR - HI-SHEAR RIVET (NAA)		128
		-000-		

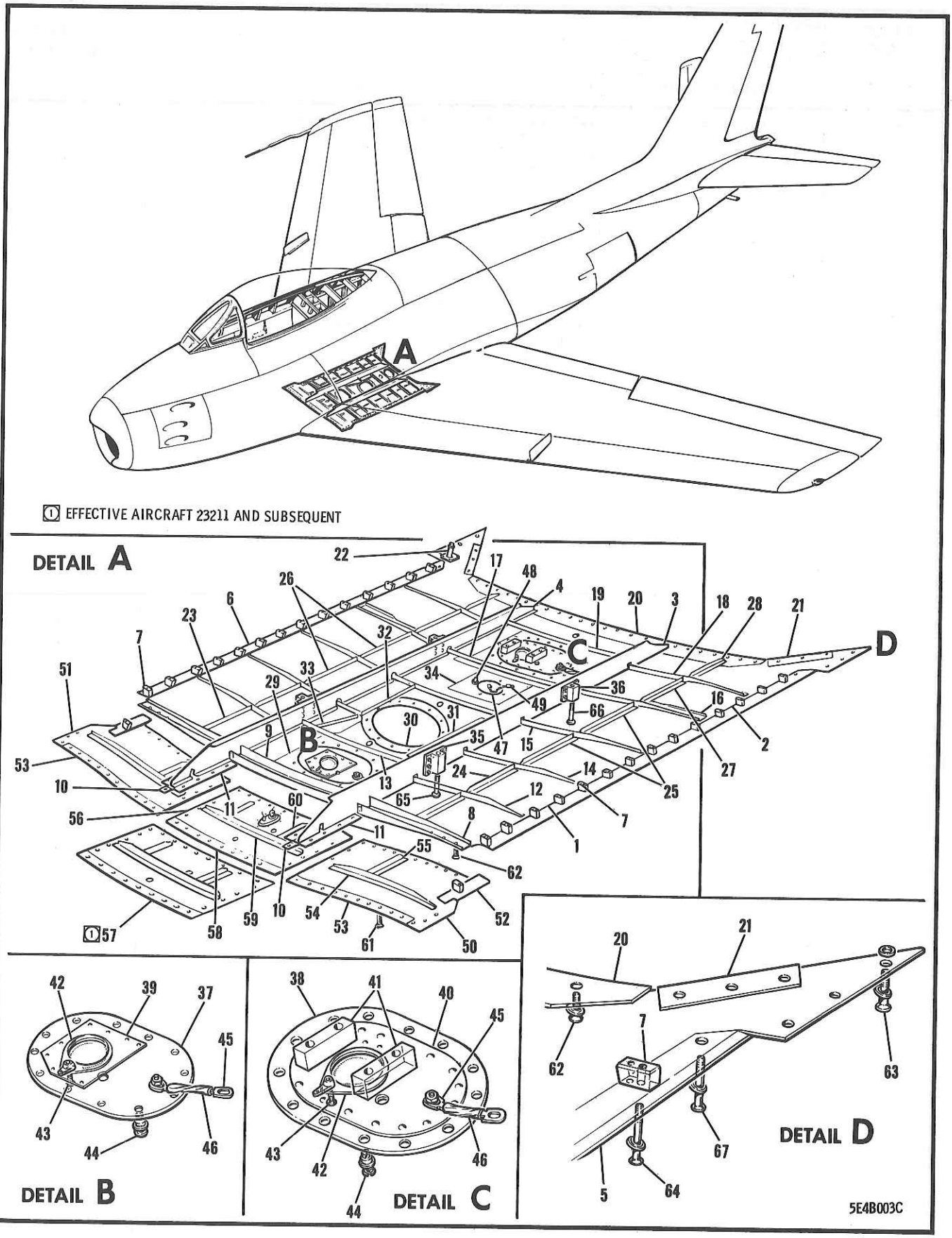

FIGURE 5 CENTRE SECTION WING FAIRING

FIGURE AND INDEX NUMBER	GROUP WING MAJOR ASSEMBLY CENTRE SECTION WING FAIRING PART NUMBER	1234567 NOMENCLATURE	CODE	UNITS PER ASSY
5 -	170-10001	WING INSTL - COMPLETE		REF
	161-10005	•FAIRING ASSY - WING CTR/SECT STA 126-178 (SEE FIG. 2)	001-210	1
	161-10005-800	•FAIRING ASSY - WING CTR/SECT STA 126-178	211-	1
	161-10005-11	••FAIRING ASSY - CENTRE WING MAIN		1
- 1	161-10005-3	•••SKIN - CENTRE WING MAIN FAIRING INTER		1
- 2	161-10005-37	•••SKIN - CENTRE WING MAIN FAIRING REAR		1
- 3	161-10005-9	•••CHANNEL - CTR/W MAIN FAIRING (PORT SIDE)		1
- 4	161-10005-10	•••CHANNEL - CTR/W MAIN FAIRING (STBD SIDE)		1
- 5	151-10006-21	•••STIFFENER ASSY - WING CENTRE SECTION FAIRING STA 131 TO 178 LH		1
- 6	151-10006-22	•••STIFFENER ASSY - WING CENTRE SECTION FAIRING STA 131 TO 178 RH		1
- 7	140-10012-3	•••BLOCK - WING CENTRE SECTION FAIRING		30
- 8	161-10005-95	•••CHANNEL - CENTRE WING MAIN FORWARD FAIRING (PORT SIDE)		1
	161-10005-96	•••CHANNEL - CENTRE WING MAIN FORWARD FAIRING (STARBOARD SIDE)		1
	161-10005-83	•••CLIP - CENTRE WING MAIN FAIRING		8
	161-10005-85	•••SHIM - CENTRE WING MAIN FAIRING		3
- 9	161-10005-97	•••CHANNEL - CTR/W MAIN INTER FAIRING		1
	9E1-17-4	•••EXTRUSION - PLASTIC (NAA)		2
-10	161-10005-87	•••SHIM - CENTRE WING MAIN FAIRING		2
-11	161-10005-93	•••PLATE - CENTRE WING MAIN INTER FAIRING		2
-12	161-10005-13	•••ANGLE - CTR/W MAIN FAIRING (PORT SIDE)		1
	161-10005-14	•••ANGLE - CTR/W MAIN FAIRING (STBD SIDE)		1
-13	161-10005-39	•••ANGLE - CENTRE WING MAIN INTER FAIRING		1
	9E1-8-10	•••EXTRUSION - PLASTIC (NAA)		1
	161-10005-57	•••SHIM - CTR/W MAIN INTER FAIRING (PORT)		1
	161-10005-59	•••SHIM - CTR/W MAIN INTER FAIRING (STBD)		1
-14	161-10005-17	•••ANGLE - CTR/W MAIN FAIRING (PORT SIDE)		1
	161-10005-18	•••ANGLE - CTR/W MAIN FAIRING (STBD SIDE)		1
	2C3-2	•••CLIP - (NAA)		1
-15	161-10005-19	•••ANGLE - CENTRE WING MAIN FAIRING		1
-16	161-10005-23	•••ANGLE - CTR/W MAIN FAIRING (PORT SIDE)		1
	161-10005-24	•••ANGLE - CTR/W MAIN FAIRING (STBD SIDE)		1
	161-10005-35	•••SPLICE - CENTRE WING MAIN FAIRING		2
	161-10005-31	•••SHIM - CENTRE WING MAIN FAIRING		4
-17	161-10005-43	•••ANGLE - CENTRE WING INTERMEDIATE FAIRING		1
	161-10005-45	•••SHIM - CENTRE WING INTERMEDIATE FAIRING		2
-18	161-10005-25	•••ANGLE - CTR/W MAIN FAIRING (PORT SIDE)		1
	161-10005-26	•••ANGLE - CTR/W MAIN FAIRING (STBD SIDE)		1
-19	161-10005-36	•••ANGLE - CENTRE WING MAIN INTER FAIRING		1
	9E1-17-4	•••EXTRUSION - PLASTIC (NAA)		1
	161-10005-57	•••SHIM - CENTRE WING MAIN FAIRING		2
-20	161-10005-29	•••SHIM - CENTRE WING MAIN REAR FAIRING		1
-21	161-10005-33	•••SHIM - CENTRE WING MAIN REAR FAIRING		2
-22	151-58312	•••DRAIN ASSY - HYDRAULIC RESERVOIR PRESS. VALVE VENT (STARBOARD SIDE)		1
-23	161-10005-99	•••ANGLE - CENTRE WING MAIN FORWARD FAIRING		2
-24	161-10005-67	•••ANGLE - CTR/W MAIN FAIRING (PORT SIDE)		1
	161-10005-68	•••ANGLE - CTR/W MAIN FAIRING (STBD SIDE)		1
-25	161-10005-69	•••ANGLE - CTR/W MAIN FAIRING (PORT SIDE)		2
-26	161-10005-70	•••ANGLE - CTR/W MAIN FAIRING (STBD SIDE)		2
-27	161-10005-73	•••ANGLE - CTR/W MAIN FAIRING (PORT SIDE)		1
	161-10005-74	•••ANGLE - CTR/W MAIN FAIRING (STBD SIDE)		1
-28	161-10005-75	•••ANGLE - CTR/W MAIN FAIRING (PORT SIDE)		1
	161-10005-76	•••ANGLE - CTR/W MAIN FAIRING (STBD SIDE)		1
-29	161-10005-55	•••DOUBLER - (ANTENNA & FUEL BOOSTER PUMP FORWARD ACCESS DOOR)		1

FIGURE AND INDEX NUMBER	GROUP WING MAJOR ASSEMBLY CENTRE SECTION WING FAIRING PART NUMBER	1234567 NOMENCLATURE	CODE	UNITS PER ASSY
5 -30	161-10005-145	•••RETAINER - CENTRE WING MAIN FAIRING		1
	161-10005-147	•••FILLER - CENTRE WING MAIN FAIRING		1
-31	161-10005-143	•••STIFFENER - CTR/W MAIN FAIRING (PORT)		1
-32	161-10005-151	•••STIFFENER - CTR/W MAIN FAIRING (STBD)		1
-33	161-10005-149	•••ANGLE - CENTRE WING MAIN FAIRING		1
	9E1-2-12	•••EXTRUSION - PLASTIC (NAA)		1
-34	161-10005-53	•••DOUBLER - (FUEL DRAIN & BOOSTER PUMP REAR ACCESS DOOR)		1
-35	140-10009-1	•••SPACER - WING CTR/SECT FWD FAIRING LH		1
	140-10009-2	•••SPACER - WING CTR/SECT FWD FAIRING RH		1
-36	140-10010	•••SPACER - WING CTR/SECT REAR FAIRING		2
	151-10017	•••DOOR ASSY - WING CTR/SECT FAIRING FUEL BOOSTER PUMP FORWARD ACCESS		1
	151-10007	•••DOOR ASSY - WING CTR/SECT FAIRING FUEL BOOSTER PUMP REAR ACCESS		1
-37	151-10017-3	••••COVER - FUEL BOOSTER PUMP FWD ACC DOOR		1
-38	151-10007-3	••••COVER - FUEL BOOSTER PUMP REAR ACC DOOR		1
-39	151-10017-5	••••PLATE - FUEL BOOSTER PUMP FWD ACC DOOR		1
	151-10017-7	••••DOUBLER - FUEL BSTR PUMP FWD ACC DOOR		1
	151-10007-5	••••DOUBLER - FUEL BSTR PUMP REAR ACC DOOR		1
-40	151-10007-7	••••PLATE - FUEL BOOSTER PUMP REAR ACC DOOR		1
-41	151-10007-9	••••BLOCK - FUEL BOOSTER PUMP REAR ACC DOOR		2
-42	140-14158	••••COVER - WING O/PNL FUEL TANK SUMP DRAIN		1
-43	AN509-10R9	••••SCREW - (DRAIN COVER ATTACHING)		1
	GF5-175	••••GROMMET - FASTENER (DFC) (BOOSTER PUMP ACCESS DOOR)		12
-44	FA5-35	••••FASTENER - FLUSH HEAD (DFC) (BOOSTER PUMP ACCESS DOOR)		12
	S5-300	•••SPRING - FASTENER (DFC) (BOOSTER PUMP ACCESS DOOR)		24
-45	9C1-3-5	•••SAFETY-CHAIN - (NAA)		2
-46	161-10005-79	•••TUBE - CTR/W FAIRING PLASTIC		2
	AN507-440R8	•••SCREW -		2
	AN960D4	•••WASHER -		8
	AN365-440	•••NUT -		2
	140-10008	•••DOOR ASSY - WING CTR/SECT FUEL DRAIN ACC		1
-47	140-10008-3	••••SKIN - FUEL DRAIN ACCESS DOOR		1
	2C28	••••CLIP - BALL CHAIN ATTACHING (NAA)		1
	GF5-175	••••GROMMET - FASTENER (DFC)		4
-48	FA5-35	••••FASTENER - FLUSH HEAD (DFC)		4
	S5-300	•••SPRING - FASTENER (DFC)		4
-49	9C1-1-5	•••CHAIN - BEAD (NAA)		1
	2C28	•••CLIP - BALL CHAIN ATTACHING (NAA)		1
	161-10005-111	••FAIRING COVER ASSY - CENTRE WING FORWARD (PORT SIDE)		1
	161-10005-112	••FAIRING COVER ASSY - CENTRE WING FORWARD (STARBOARD SIDE)		1
-50	161-10005-113	•••SKIN - CTR/W FORWARD FAIRING (PORT SIDE)		1
-51	161-10005-114	•••SKIN - CTR/W FORWARD FAIRING (STBD SIDE)		1
-52	151-10006-31	•••STIFFENER ASSY - WING CENTRE SECTION STA 131-178 LH FAIRING (FORWARD)		1
	151-10006-32	•••STIFFENER ASSY - WING CENTRE SECTION STA 131-178 RH FAIRING (FORWARD)		1
-53	161-10005-115	•••SHIM - CENTRE WING FORWARD FAIRING		2
-54	161-10005-117	•••ANGLE - CTR/W FWD FAIRING (PORT SIDE)		1
	161-10005-118	•••ANGLE - CTR/W FWD FAIRING (STBD SIDE)		1
-55	161-10005-119	•••ANGLE - CTR/W FWD FAIRING (PORT SIDE)		1
	161-10005-120	•••ANGLE - CTR/W FWD FAIRING (STBD SIDE)		1
	2C3-2	•••CLIP - (NAA)		2
	161-10005-121	••FAIRING COVER ASSY - CTR/W FORWARD INTER	001-210	1

FIGURE AND INDEX NUMBER	GROUP WING MAJOR ASSEMBLY CENTRE SECTION WING FAIRING PART NUMBER	1234567 NOMENCLATURE	CODE	UNITS PER ASSY
5 -	161-10005-955	••FAIRING COVER ASSY - CTR/W FORWARD INTER	211-	1
-56	161-10005-123	•••SKIN - CTR/W FWD INTERMEDIATE FAIRING	001-210	1
-57	161-10005-951	•••SKIN - CTR/W FWD INTERMEDIATE FAIRING	211-	1
		OR		
	161-10005-123	•••SKIN - CTR/W FWD INTERMEDIATE FAIRING		
-58	161-10005-125	•••SHIM - CTR/W FWD INTERMEDIATE FAIRING		1
-59	161-10005-127	•••ANGLE - CTR/W FWD INTERMEDIATE FAIRING		1
-60	161-10005-129	•••ANGLE - CTR/W FWD INTERMEDIATE FAIRING (PORT SIDE)		1
	161-10005-130	•••ANGLE - CTR/W FWD INTERMEDIATE FAIRING (STARBOARD SIDE)		1
	2C3-2	•••CLIP - (NAA)		2
-61	S•P•1561-8-32-8	••SEMS - FAIRING WASHER (SHI) (FAIRING ATT)		41
-62	S•P•1561-8-32-11	•SEMS - FAIRING WASHER (SHI) (FAIRING ATT)		71
-63	S•P•1561-8-32-13	•SEMS - FAIRING WASHER (SHI) (FAIRING ATT)		2
	AN960-616	•WASHER -		2
	A3235-020-SS	•WASHER - FLAT-HEAD SCREW(TIN)		30
-64	AN509-10-27	•SCREW - (FAIRING ATTACHING)		30
-65	AN509-10R41	•SCREW - (FAIRING ATTACHING)		2
-66	NAS205-35	•SCREW - (FAIRING ATTACHING)		2
	A3135-SS-017-27	•WASHER - FLAT-HEAD SCREW(TIN)		2
-67	NAS204-15	•SCREW - (FAIRING ATTACHING)		2
		(CONTINUED SEE SECTION 12)		

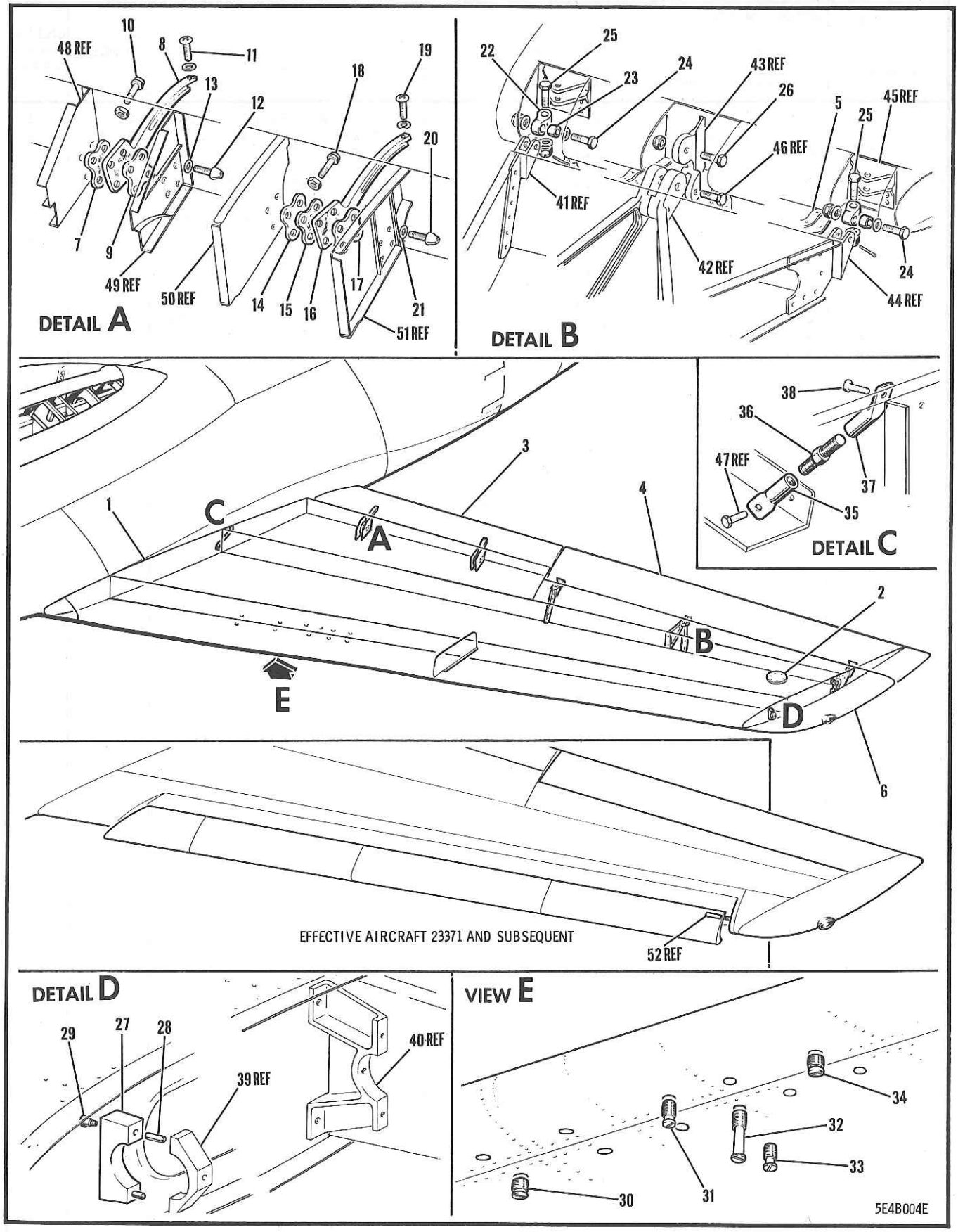

FIGURE 6 COMPLETE OUTER WING

ROYAL CANADIAN AIR FORCE

ADVANCE REVISION

Serial #9 dated 24 Mar 61
(Sheet 1 of 5)

(This Advance Revision replaces Advance Revision Serial #1)

The sheets of this Advance Revision are to be inserted in the EO as follows:-

Sheet 1 facing page 48
Sheet 2 facing page 48
Sheet 3 facing page 48
Sheet 4 facing page 55
Sheet 5 facing page 140

SABRE WING CONFIGURATION BREAKDOWN

The following information will be found very useful in instances where a replacement wing is required.

Wing Drawing	Production Effectivity	Spares Effectivity	Changes Incorporated and Comments
170-14001-803	23001 to 23040 incl.	23001 to 23370 incl.	Production wings also shipped as spares. Extended leading edge fitted.
170-14001-804	23001 to 23040 incl.	23001 to 23370 incl.	
170-14001-807	23041 to 23100 incl.	23001 to 23370 incl.	Production wing only Incorporates access hole for MLG trunnion pin locking bolt.
170-14001-808	23041 to 23100 incl.	23001 to 23370 incl.	
170-14001-805	23101 to 23200 incl.	23001 to 23370 incl.	Production wing only Incorporates larger diameter MLG trunnion locking bolts.
170-14001-806	23101 to 23200 incl.	23001 to 23370 incl.	
170-14001-809	23201 to 23300 incl.	23001 to 23370 incl.	Production wing only Incorporates fuel air indicating system for drop tanks.
170-14001-810	23201 to 23300 incl.	23001 to 23370 incl.	
170-14001-811	23211 to 23430 incl.	23001 to 23370 incl.	Production wing only. Incorporates deletion of manual release system.
170-14001-812	23211 to 23430 incl.	23001 to 23370 incl.	

ISSUED ON AUTHORITY OF THE CHIEF OF THE AIR STAFF

Wing Drawing	Production Effectivity	Spares Effectivity	Changes Incorporated and Comments
170-14001-813 170-14001-814	Not used	NA	Not used on production Spare wing configuration. Not procured by RCAF.
170-14001-815 170-14001-816	Not used	NA	Not used on production Spare wing configuration. Not procured by RCAF.
170-14001-817 170-14001-818	Not used	NA	Not used on production Spare wing configuration. Not procured by RCAF.
170-14001-819 170-14001-820	Not used	NA	Not used on production Spare wing configuration. Not procured by RCAF.
170-14001-821 170-14001-822	Not used	23001 to 23370 incl.	Spare configuration only. Complete electrical wiring and external marking. Procured as spares.
170-14001-823 170-14001-824	23431 to 23530 incl.	23371 and subs	Production wing only. This bank of Aircraft were modified in accordance with 6B/9.
170-14001-825 170-14001-826	Not used	NA	A spare configuration not procured by RCAF.
170-14001-827 170-14001-828	23621 to 23747 incl. 23611 to 23747 incl.	23371 and subs 23371 and subs	Production wing - modified to deletion of 12" wing tip extension prior to delivery. Have slatted edge and reinforced main spar.
170-14001-829 170-14001-830	23531 to 23610 incl. 23531 to 23610 incl.	23001 to 23370 incl. 23001 to 23370 incl.	Production wing. EO 05-5E-6B/7 incorporated.
170-14001-831 170-14001-832	Not used	23001 to 23370 incl. 23001 to 23370 incl.	Spare configuration.

Wing Drawing	Production Effectivity	Spares Effectivity	Changes Incorporated and Comments
170-14001-833 170-14001-834	Not used	23371 and subs 23371 and subs	Spare configuration. Procured by RCAF. Slatted LE and reinforced main spar incorporated.
170-14001-835	23611 to 23620 incl.	23371 and subs	Production wing with changes to 170-14601 panel. Modified for deletion of 12" wing tip extension. Has slatted leading edge and reinforced main spar.
170-14001-837 170-14001-838	23748 to 23784 incl. 23748 to 23784 incl.	23371 and subs 23371 and subs	Production wings. Have slatted LE and changes in the aileron assembly.
170-14001-839	Not used	NA	Spare wings. Not procured by RCAF.
170-14001-847 170-14001-848	23785 and subs 23785 and subs	23371 and subs 23371 and subs	Modified to delete 12" extended wing tip. Have slatted LE.
170-14001-849 170-14001-850	NA	23371 and subs 23371 and subs	Spare configuration created to provide a spare slatted LE wing for Mk. 6 aircraft. Have latest aileron, flap and external markings.
170-14001-851	NA	23001 to 23370 incl. 23001 to 23370 incl.	Spare configuration created for Sabre 5 aircraft. Have latest aileron, flap and external markings.

NOTE

-829 and -830 wings modified IAW 6B/9 will be used for spares effectivity 23371 and subs only.

FIGURE AND INDEX NUMBER	GROUP WING MAJOR ASSEMBLY COMPLETE OUTER WING PART NUMBER	1234567 NOMENCLATURE	CODE	UNITS PER ASSY
6 -	170-14001-803	WING ASSY - OUTER PANEL COMPLETE PORT (SEE FIG. 2)	001-040	1
	170-14001-807	WING ASSY - OUTER PANEL COMPLETE PORT	041-100	1
	170-14001-805	WING ASSY - OUTER PANEL COMPLETE PORT	101-200	1
	170-14001-809	WING ASSY - OUTER PANEL COMPLETE PORT	201-210	1
	170-14001-811	WING ASSY - OUTER PANEL COMPLETE PORT	211-430	1
	170-14001-823	WING ASSY - OUTER PANEL COMPLETE PORT	431-530	1
	170-14001-829	WING ASSY - OUTER PANEL COMPLETE PORT	531-610	1
	170-14001-835	WING ASSY - OUTER PANEL COMPLETE PORT	611-620	1
	170-14001-827	WING ASSY - OUTER PANEL COMPLETE PORT	621-699	1
	170-14001-837	WING ASSY - OUTER PANEL COMPLETE PORT	700-736	1
	170-14001-847	WING ASSY - OUTER PANEL COMPLETE PORT	737-	1
	170-14001-851	SPARE PART ASSY FOR 170-14001 - PORT NON-SLATTED LEADING EDGE	001-370	
	170-14001-849	SPARE PART ASSY FOR 170-14001 - PORT SLATTED LEADING EDGE	371-	
	170-14001-804	WING ASSY - O/PNL COMPL STBD (SEE FIG. 2)	001-040	1
	170-14001-808	WING ASSY - OUTER PANEL COMPLETE STARBOARD	041-100	1
	170-14001-806	WING ASSY - OUTER PANEL COMPLETE STARBOARD	101-200	1
	170-14001-810	WING ASSY - OUTER PANEL COMPLETE STARBOARD	201-210	1
	170-14001-812	WING ASSY - OUTER PANEL COMPLETE STARBOARD	211-430	1
	170-14001-824	WING ASSY - OUTER PANEL COMPLETE STARBOARD	431-530	1
	170-14001-830	WING ASSY - OUTER PANEL COMPLETE STARBOARD	531-610	1
	170-14001-828	WING ASSY - OUTER PANEL COMPLETE STARBOARD	611-699	1
	170-14001-838	WING ASSY - OUTER PANEL COMPLETE STARBOARD	700-736	1
	170-14001-848	WING ASSY - OUTER PANEL COMPLETE STARBOARD	737-	1
	170-14001-852	SPARE PART ASSY FOR 170-14001 - STARBOARD NON-SLATTED LEADING EDGE	001-370	
	170-14001-850	SPARE PART ASSY FOR 170-14001 - STARBOARD SLATTED LEADING EDGE	371-	
- 1	170-14601-801	•WING ASSY - OUTER PANEL PORT	001-040	1
	170-14601-805	•WING ASSY - OUTER PANEL PORT	041-100	1
	170-14601-803	•WING ASSY - OUTER PANEL PORT	101-200	1
	170-14601-807	•WING ASSY - OUTER PANEL PORT	201-210	1
	170-14601-809	•WING ASSY - OUTER PANEL PORT	211-430	1
	170-14601-811	•WING ASSY - OUTER PANEL PORT	431-530	1
	170-14601-815	•WING ASSY - OUTER PANEL PORT	531-610	1
	170-14601-817	•WING ASSY - OUTER PANEL PORT	611-620	1
	170-14601-813	•WING ASSY - OUTER PANEL PORT	621-699	1
	170-14601-819	•WING ASSY - OUTER PANEL PORT	700-736	1
	170-14601-821	•WING ASSY - OUTER PANEL PORT	737-	1
	170-14601-802	•WING ASSY - OUTER PANEL STARBOARD	001-040	1
	170-14601-806	•WING ASSY - OUTER PANEL STARBOARD	041-100	1
	170-14601-804	•WING ASSY - OUTER PANEL STARBOARD	101-200	1
	170-14601-808	•WING ASSY - OUTER PANEL STARBOARD	201-210	1
	170-14601-810	•WING ASSY - OUTER PANEL STARBOARD	211-430	1
	170-14601-812	•WING ASSY - OUTER PANEL STARBOARD	431-530	1
	170-14601-816	•WING ASSY - OUTER PANEL STARBOARD	531-610	1
	170-14601-814	•WING ASSY - OUTER PANEL STARBOARD	611-699	1
	170-14601-820	•WING ASSY - OUTER PANEL STARBOARD	700-736	1
	170-14601-822	•WING ASSY - OUTER PANEL STARBOARD	737-	1
	170-14002-801	••WING ASSY - O/PNL INTER PORT (SEE FIG. 8)		REF
	170-14002-802	••WING ASSY - O/PNL INTER STBD (SEE FIG. 8)		REF
	170-52014-1	••SURFACE CONTROLS INSTL - PORT WOP (SEE SECTION 7)		REF
	170-52014-2	••SURFACE CONTROLS INSTL - STARBOARD WOP (SEE SECTION 7)		REF
- 2	151-51014	••INSTRUMENT EQUIP. INSTL - PORT WING (SEE SECTION 8)		REF
	170-51114	••INSTRUMENT EQUIP. INSTL - STARBOARD WING (SEE SECTION 8)		REF

FIGURE AND INDEX NUMBER	GROUP WING MAJOR ASSEMBLY COMPLETE OUTER WING PART NUMBER	1234567 NOMENCLATURE	CODE	UNITS PER ASSY
6 -	170-54014-1	••ELECTRICAL EQUIP. INSTL - PORT WING (SEE SECTION 10)		REF
	13B-50003-1	••ELECTRICAL EQUIP. INSTL - PORT WING (SEE SECTION 10)		REF
	170-54014-2	••ELECTRICAL EQUIP. INSTL - STARBOARD WING (SEE SECTION 10)		REF
	13B-50003-2	••ELECTRICAL EQUIP. INSTL - STARBOARD WING (SEE SECTION 10)		REF
	13A-51035-1	••WIRING INSTL - PORT WING ELEC EXTENDED LE BP 99-1/2 TANK STA (SEE SECTION 10)		REF
	13B-50009-1	••WIRING INSTL - PORT WING ELEC EXTENDED LE BP 99-1/2 TANK STA (SEE SECTION 10)		REF
	13A-51035-2	••WIRING INSTL - STBD WING ELEC EXTENDED LE BP 99-1/2 TANK STA (SEE SECTION 10)		REF
	13B-50009-2	••WIRING INSTL - STBD WING ELEC EXTENDED LE BP 99-1/2 TANK STA (SEE SECTION 10)		REF
	170-58063-801	••HYDRAULIC EQUIP. INSTL - PORT WING (SEE SECTION 11)		REF
	170-58063-802	••HYDRAULIC EQUIP. INSTL - STARBOARD WING (SEE SECTION 11)		REF
	172-48014-51	••FUEL SYS EQUIP. INSTL - PORT OUTER WING (SEE SECTION 12)		REF
	172-48014-52	••FUEL SYS EQUIP. INSTL - STBD OUTER WING (SEE SECTION 12)		REF
- 3	177-18001-101	•FLAP ASSY - COMPLETE PORT (SEE FIG. 23)		REF
	177-18001-2	•FLAP ASSY - COMPLETE STBD (SEE FIG. 23)		REF
- 4	165-16001-1	•AILERON ASSY - COMPLETE PORT (SEE FIG. 24)		REF
	165-16001-2	•AILERON ASSY - COMPLETE STBD (SEE FIG. 24)		REF
- 5	165-16003-11	•SEAL & COUNTERBALANCE INSTL - PORT WING AILERON (SEE FIG. 25)		REF
	165-16003-12	•SEAL & COUNTERBALANCE INSTL - STARBOARD WING AILERON (SEE FIG. 25)		REF
- 6	172-14713-1	•TIP ASSY - PORT WING EXTN LE (SEE FIG. 22)		REF
	172-14713-2	•TIP ASSY - STBD WING EXTN LE (SEE FIG. 22)		REF
- 7	140-18017-11	•PLATE - FLAP TRACK TO WING ATTACHING		1
- 8	151-18128-11	•TRACK ASSY - FLAP INBOARD MPI		1
- 9	140-18017-9	•PLATE - FLAP TRACK TO WING ATTACHING		1
-10	NAS428-4-7	•BOLT - (TRACK ADJUSTING)		1
	AN316-4R	•NUT -		1
-11	NAS221-11	•SCREW - (FLAP RETAINING)		1
	AN960C10	•WASHER -		1
-12	NAS148-30	•BOLT - (TRACK ATTACHING)		4
-13	NAS143-8C	•WASHER -		4
	AN960D816	•WASHER -		4
	EB-080	•NUT - DOUBLE HEX HIGH TENSILE (ESN)		4
-14	140-18017-7	•PLATE - FLAP TRACK TO WING ATTACHING		1
-15	140-18017-11	•PLATE - FLAP TRACK TO WING ATTACHING		1
-16	151-18011-11	•TRACK ASSY - FLAP OUTBOARD MPI		1
-17	140-18017-9	•PLATE - FLAP TRACK TO WING ATTACHING		1
-18	NAS428-4-7	•BOLT - (TRACK ADJUSTING)		1
	AN316-4R	•NUT -		1
-19	NAS221-11	•SCREW - (FLAP RETAINING)		1
	AN960C10	•WASHER -		1
-20	NAS148-29	•BOLT - (TRACK ATTACHING)		4
-21	NAS143-8C	•WASHER -		4
	AN960D816	•WASHER -		4
	EB-080	•NUT - DOUBLE HEX HIGH TENSILE (ESN)		4
-22	165-16009	•FITTING ASSY - AILERON INBD & OUTBD HINGE		2
	B-68	••NEEDLE-BEARING - DRAWN CUP (TOR)		1
-23	165-16012	•RACE - AILERON INBOARD & OUTBOARD HINGE BEARING INNER MPI		2

FIGURE AND INDEX NUMBER	GROUP / MAJOR ASSEMBLY / PART NUMBER	WING / COMPLETE OUTER WING / 1234567 NOMENCLATURE	CODE	UNITS PER ASSY
6 -24	AN174-15A	•BOLT - MPI		2
	AN960D416	•WASHER -		4
	AN365-428	•NUT - MPI		2
-25	AN4-15	•BOLT - MPI (AILERON OUTBOARD & INBOARD HINGE ATT) (AS PER EO 05-5E-6A/158)		2
	AN960PD416	•WASHER -		2
	AN320-4	•NUT -		2
	AN380-2-2	•COTTER-PIN -		1
-26	NAS464-6A40	•BOLT - (AILERON CENTRE WING ATTACHING)		AR
	170-14001-979	•SHIM - (BOTH SIDES 165-16169 TO ELIMINATE END PLAY)		
	AN364-624	•NUT - MPI		1
	165-51107-21	•FITTING ASSY - WOP AIRSPEED BOOM FWD ATT (STBD WING) (ORDER 165-51107 CLAMP ASSY FOR FUT PROC)		1
-27	165-51107-13	••FITTING - WOP AIRSPEED BOOM FORWARD ATT (STARBOARD WING) (SEE SECT. 9 FOR 165-51107-9)		1
-28	165-51107-11	••PIN - WOP AIRSPEED BOOM FORWARD ATT FITTING UPPER (STARBOARD WING)		1
	165-51107-7	••PIN - WOP AIRSPEED BOOM FWD ATT FTG LWR (STARBOARD WING)		1
	RD205SH-5.5L	••INSERT - LOCKED-IN (ROS) (STARBOARD WING)		2
	RL24SB-7	••LOCK-RING - STANDARD (ROS) (STBD WING)		2
-29	5B17C5A	•BOLT - CRE (10-32) (NAA) (AIRSPEED BOOM FITTING ATTACHING STARBOARD WING)		2
	AN960C10	•WASHER - (STARBOARD WING)		2
	AN7510-2	•PLATE -		1
-30	151-14029	•PLUG ASSY - WING OUTER PANEL FWD & REAR ROCKET & BOMB HOIST FITTING		12
-31	157-14029-3	•PLUG - WOP BOMB & BOMB HOIST FITTING		1
-32	157-14029-11	•PLUG - WOP BOMB & BOMB HOIST FITTING		2
-33	157-14029-9	•PLUG - WOP BOMB & BOMB HOIST FITTING		1
-34	151-14029-21	•PLUG ASSY - WOP FRONT & REAR ROCKET & BOMB HOIST FITTING		1
-35	140-14166-5	•TERMINAL - LANDING GEAR BEAM TO FUSELAGE TURNBUCKLE ATTACHING MPI		1
-36	140-14167	•TURNBUCKLE - LDG/GR BEAM TO FUSELAGE ATT		1
-37	140-14166-3	•TERMINAL - LANDING GEAR BEAM TE FUSELAGE TURNBUCKLE ATTACHING MPI		1
-38	AN4H7A	•BOLT - MPI (FUSELAGE TURNBUCKLE TERM. ATT)		REF
-39	165-51107-9	SUPPORT - WOP AIRSPEED BOOM FORWARD ATT (SEE SECTION 9)		REF
-40	165-51108-5	SUPPORT - WOP AIRSPEED BOOM REAR BEAM ATT (SEE FIG. 9)		REF
-41	165-16007-1	FITTING - PORT WING AILERON INBD FWD HINGE (SEE FIG. 9)		REF
-42	165-16068-7	FITTING ASSY - PORT WING AILERON CTR HINGE (SEE FIG. 9)		REF
-43	165-16169-5	FITTING - AILERON SPAR CENTRE HINGE (SEE FIG. 24)		REF
-44	165-16020-1	FITTING - PORT WING AILERON OUTBD FWD HINGE (SEE FIG. 9)		REF
-45	157-16008	FITTING - AILERON INBD & OUTBD REAR HINGE (SEE FIG. 24)		REF
-46	NAS464P8-24	BOLT - (AILERON ACTUATOR ROD-END TO HINGE FITTING ATTACHING (SEE SECTION 7)		REF
-47	AN4H7	BOLT - MPI (LDG/GR BEAM TO FUS ATT) (SEE FIG. 2)		REF
-48	151-14633-11	RIB ASSY - PORT WOP TRAILING EDGE STA 100 (SEE FIG. 14)		REF
-49	151-14633-1	RIB ASSY - PORT WOP TRAILING EDGE STA 101 (SEE FIG. 14)		REF

FIGURE AND INDEX NUMBER	GROUP WING MAJOR ASSEMBLY COMPLETE OUTER WING PART NUMBER	1234567 NOMENCLATURE	CODE	UNITS PER ASSY
6 -50	151-14675-1	RIB ASSY - PORT WOP TRAILING EDGE STA 142 (SEE FIG. 14)		REF
-51	151-14676-1	RIB ASSY - PORT WOP TRAILING EDGE STA 144 (SEE FIG. 14)		REF
-52	227-14617	STUD - WOP EXTENDED LE TO WEDGE(SEE FIG.21)		REF
		(CONTINUED SEE FIG. 7)		

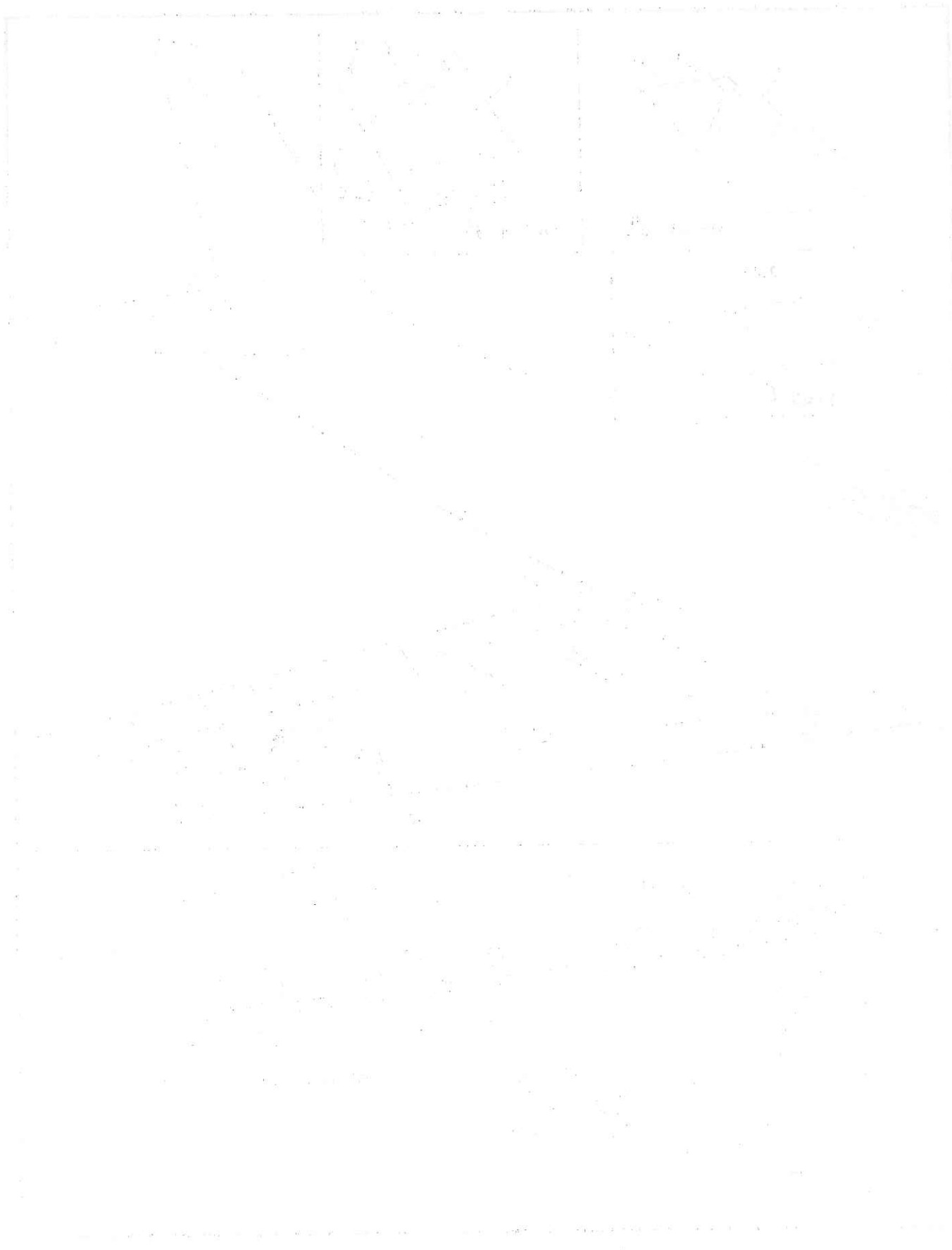

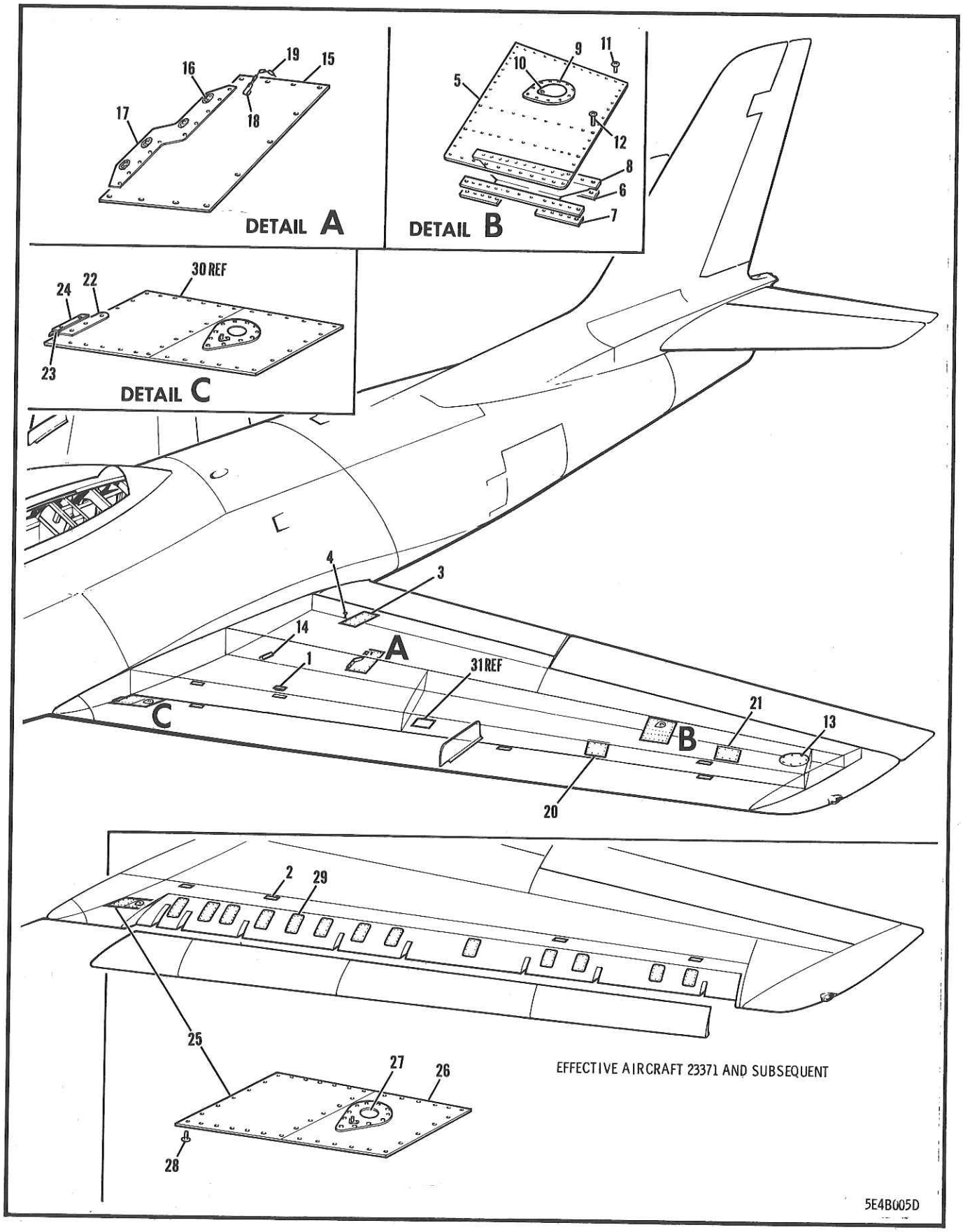

FIGURE 7 OUTER WING ACCESS DOORS

After item 5

Fig. and Index Number	Part Number	Nomenclature	Code	Units Per Assy
7- -5	165-14059-14	Door		
		Add:		
	165-14569-101	Strip angle complete with anchor nuts - securing aileron actuator access door		1
	165-14569-103	Strip angle complete with anchor nuts - securing aileron actuator access door		1
	165-14569-105	Strip angle complete with anchor nuts - securing aileron actuator access door		1
	165-14569-107	Strip angle complete with anchor nuts - securing aileron actuator access door		1

FIGURE AND INDEX NUMBER	GROUP WING MAJOR ASSEMBLY OUTER WING ACCESS DOORS PART NUMBER	1234567 NOMENCLATURE	CODE	UNITS PER ASSY
7 -	170-14001-803	WING ASSY - O/PNL COMPL PORT (SEE FIG. 6)		REF
	170-14001-804	WING ASSY - O/PNL COMPL STBD (SEE FIG. 6)		REF
- 1	140-14205	•DOOR ASSY - WOP FRONT SPAR HINGE COVER	001-370	6
- 2	140-14205	•DOOR ASSY - WOP FRONT SPAR HINGE COVER (AS PER EO 05-5E-6B/9)	371-	8
	140-14245	••SPACER - WOP FRONT SPAR HINGE COVER DOOR		1
	140-14205-3	••COVER - WOP FRONT SPAR HINGE		1
	AN507-832R16	•SCREW - (UPPER & LWR WING SURFACE COVER) (PORT WING)	001-370	12
	AN507-832R16	•SCREW - (UPPER & LWR WING SURFACE COVER) (PORT WING)	371-	16
	AN507-832R16	•SCREW - (LOWER WING SURFACE COVER) (STARBOARD WING)	001-370	6
	AN507-832R16	•SCREW - (LOWER WING SURFACE COVER) (STARBOARD WING)	371-	8
	AN507-832R16	•SCREW - (UPPER WING SURFACE COVER) (STARBOARD WING)	001-370	4
	AN507-832R16	•SCREW - (UPPER WING SURFACE COVER) (STARBOARD WING)	371-	6
	AN507-832R12	•SCREW - (WING STA 185 UPPER SURFACE COVER) (STARBOARD WING)		2
	151-14153-1	•DOOR ASSY - PORT WOP TE TRUNNION PIN ACC		1
	151-14153-2	•DOOR ASSY - STBD WOP TE TRUNNION PIN ACC		1
- 3	151-14153-3	••DOOR - PORT WOP TE TRUNNION PIN ACCESS		1
	151-14153-4	••DOOR - STBD WOP TE TRUNNION PIN ACCESS		1
	151-14153-5	••LINER - PORT WOP TE TRUNNION PIN ACC DOOR		1
	151-14153-6	••LINER - STBD WOP TE TRUNNION PIN ACC DOOR		1
- 4	AN507-440-6	•SCREW - (TRUNNION PIN ACCESS DOOR ATT)		1
	AN365-440	•NUT -		1
	AN507-1032R8	•SCREW - (TRUNNION PIN ACCESS DOOR ATT)		15
	165-14059-21	•DOOR ASSY - PORT WOP INTER UP. ACC STA 215		1
	165-14059-22	•DOOR ASSY - STBD WOP INTER UP. ACC STA 215		1
- 5	165-14059-13	••DOOR - PORT WOP INTER UP. ACCESS STA 215		1
	165-14059-14	••DOOR - STBD WOP INTER UP. ACCESS STA 215		1
- 6	165-14059-7	••DOUBLER - WOP INTER UPPER ACCESS STA 215		1
- 7	165-14059-9	••DOUBLER - WOP INTER UPPER ACCESS STA 215		2
- 8	165-14059-5	••STRINGER - WOP INTER UPPER ACCESS STA 215		1
- 9	165-14059-15	••DOUBLER - WOP INTER UPPER ACCESS STA 215		1
-10	8C3-2-051	••COVER - BOLT ACCESS (NAA)		1
	7S13-1032C16	••SCREW - 100-DEG FLUSH HEAD CRE (NAA) (COVER ATTACHING)		1
	AN960D10	••WASHER -		1
	AN380-2-2	••PIN -		1
	2S3-3	••SHIM - ANCHOR NUT (NAA)		1
-11	AN509-10R11	•SCREW - (DOOR ATTACHING)		49
-12	AN509-516R15	•SCREW - (DOOR ATTACHING)		4
	140-14062	•DOOR ASSY - PORT WOP REMOTE IND COMP ACC		1
-13	140-14062-3	••COVER - PORT WOP REMOTE IND COMP ACCESS		1
	2C28	••CLIP - BALL CHAIN ATTACHING (NAA)		1
	NAS200-632BC8	•SCREW - (PORT WING)		6
-14	140-14157	•COVER - WOP JACK FITTING OPENING		1
	AN507-1032R7	•SCREW - (COVER ATTACHING)		1
	170-14432-1	•DOOR ASSY - PORT WOP FLAP ACTUATOR ACCESS		1
	170-14432-2	•DOOR ASSY - STBD WOP FLAP ACTUATOR ACCESS		1
-15	170-14432-3	••DOOR - PORT WOP FLAP ACTUATOR ACCESS		1
	170-14432-4	••DOOR - STARBOARD WOP FLAP ACTUATOR ACCESS		1
-16	170-14432-5	••DOUBLER - PORT WOP FLAP ACTUATOR ACC DOOR		1
	170-14432-6	••DOUBLER - STBD WOP FLAP ACTUATOR ACC DOOR		1
-17	153-487150-29	••SHIM - FUEL WING TIP DROP TANK		1
	22A21-22-82	••NUT - FLOATING TWO-LUG ANCHOR (ESN)		4

FIGURE AND INDEX NUMBER	GROUP WING MAJOR ASSEMBLY OUTER WING ACCESS DOORS PART NUMBER	1234567 NOMENCLATURE	CODE	UNITS PER ASSY
7 -18	2C28	••CLIP - BALL CHAIN ATTACHING (NAA)	001-300	1
-19	9C1-1-5	••CHAIN - BEAD (NAA)	001-300	1
	9C1-2-5	••CHAIN - BEAD (NAA)	301-	1
	AN509-8R8	•SCREW - (FLAP ACTUATOR ACCESS DOOR)		11
	AN509-10R11	•SCREW - (FLAP ACTUATOR ACCESS DOOR)		4
-20	165-14608-1	•DOOR - PORT WOP LOWER ACCESS STA 197-206	001-662	1
	165-14608-801	•DOOR - PORT WOP LOWER ACCESS STA 197-206	663-	1
	165-14608-2	•DOOR - STBD WOP LOWER ACCESS STA 197-206	001-662	1
	165-14608-802	•DOOR - STBD WOP LOWER ACCESS STA 197-206	663-	1
	AN509-10R11	•SCREW - (ACCESS DOOR ATTACHING)	001-635	27
	AN509-10R11	•SCREW - (ACCESS DOOR ATTACHING)	636-	18
	AN509-10R12	•SCREW - (ACCESS DOOR ATTACHING)	636-	9
	AN507-440-5	•SCREW - (ACCESS DOOR ATTACHING)		1
	AN365-440	•NUT -		1
-21	165-14609-1	•DOOR - PORT WOP LOWER ACCESS STA 233-242		1
	165-14609-2	•DOOR - STBD WOP LOWER ACCESS STA 233-242		1
	AN509-10R10	•SCREW - (ACCESS DOOR ATTACHING)		34
	AN507-440-5	•SCREW - (ACCESS DOOR ATTACHING)		1
	AN365-440	•NUT -		1
	151-14273-1	•RETAINER ASSY - PORT WOP LE TO FAIRING	001-100	1
	151-14273-801	•RETAINER ASSY - PORT WOP LE TO FAIRING	101-	1
	151-14273-2	•RETAINER ASSY - STBD WOP LE TO FAIRING	001-100	1
	151-14273-802	•RETAINER ASSY - STBD WOP LE TO FAIRING	101-	1
-22	151-14273-3	••RETAINER - PORT WOP LE TO FAIRING		1
	151-14273-4	••RETAINER - STARBOARD WOP LE TO FAIRING		1
-23	151-14273-5	••SPACER - WOP LE TO FAIRING RETAINER		1
-24	151-14273-7	••SHIM - WOP LE TO FAIRING RETAINER	001-100	1
	151-14273-951	••SHIM - WOP LE TO FAIRING RETAINER	101-	1
-25	191-14244-11	•DOOR ASSY - PORT WOP 6-3 EXTN LE LINE ACC (AS PER EO 05-5E-6B/9)	371-	1
	191-14244-12	•DOOR ASSY - STBD WOP 6-3 EXTN LE LINE ACC (AS PER EO 05-5E-6B/9)	371-	1
-26	191-14244-3	••DOOR - PORT WOP 6-3 EXTN LE LINE ACCESS	371-	1
	191-14244-4	••DOOR - STBD WOP 6-3 EXTN LE LINE ACCESS	371-	1
	191-14244-5	••DOUBLER - PORT WOP 6-3 EXTN LE LINE ACC	371-	1
	191-14244-6	••DOUBLER - STBD WOP 6-3 EXTN LE LINE ACC	371-	1
	2C28	••CLIP - BALL CHAIN ATTACHING (NAA)	371-	1
	99833-P.130	••RECEPTACLE - AIRLOC FASTENER STUD (MKM)	371-	1
	9C1-1-3	••CHAIN - BEAD (NAA)	371-	1
-27	227-14245	••DOOR ASSY - WOP 6-3 EXTN LE FUEL PRESSURE	371-	1
	227-14245-3	•••DOOR - WOP 6-3 EXTN LE FUEL PRESSURE	371-	1
	227-14245-5	•••CLIP - WOP 6-3 EXTN LE FUEL PRESS. DOOR	371-	1
	98265-1-140	•••STUD - FLUSH HEAD AIRLOC FASTENER (MKM)	371-	1
	99836	•••CROSS-PIN - AIRLOC FASTENER (MKM)	371-	1
	2C28	•••CLIP - BALL CHAIN ATTACHING (NAA)	371-	1
-28	AN509-10R9	•SCREW - (LINE ACCESS DOOR ATTACHING)	371-	40
-29	227-14561	•DOOR - WOP EXTENDED SLATTED LE ACCESS (AS PER EO 05-5E-6B/9)	371-	13
	AN509-10R8	•SCREW - (ACCESS DOOR ATTACHING)	371-	169
	7S13-1032-16	•SCREW - 100-DEG FLUSH HEAD CRE (NAA)	371-	15
	2W18-10M	•WASHER - FLAT (NAA)	371-	15
	AN380-2-2	•PIN -	371-	15
-30	172-14711-81	DOOR - PORT WING EXTN LE LINE ACC INBOARD (SEE FIG. 16)		REF
-31	172-14711-53	DOOR - EXTENDED LE ELECTRICAL ACCESS (SEE FIG. 16)		REF

(CONTINUED SEE FIG. 20)

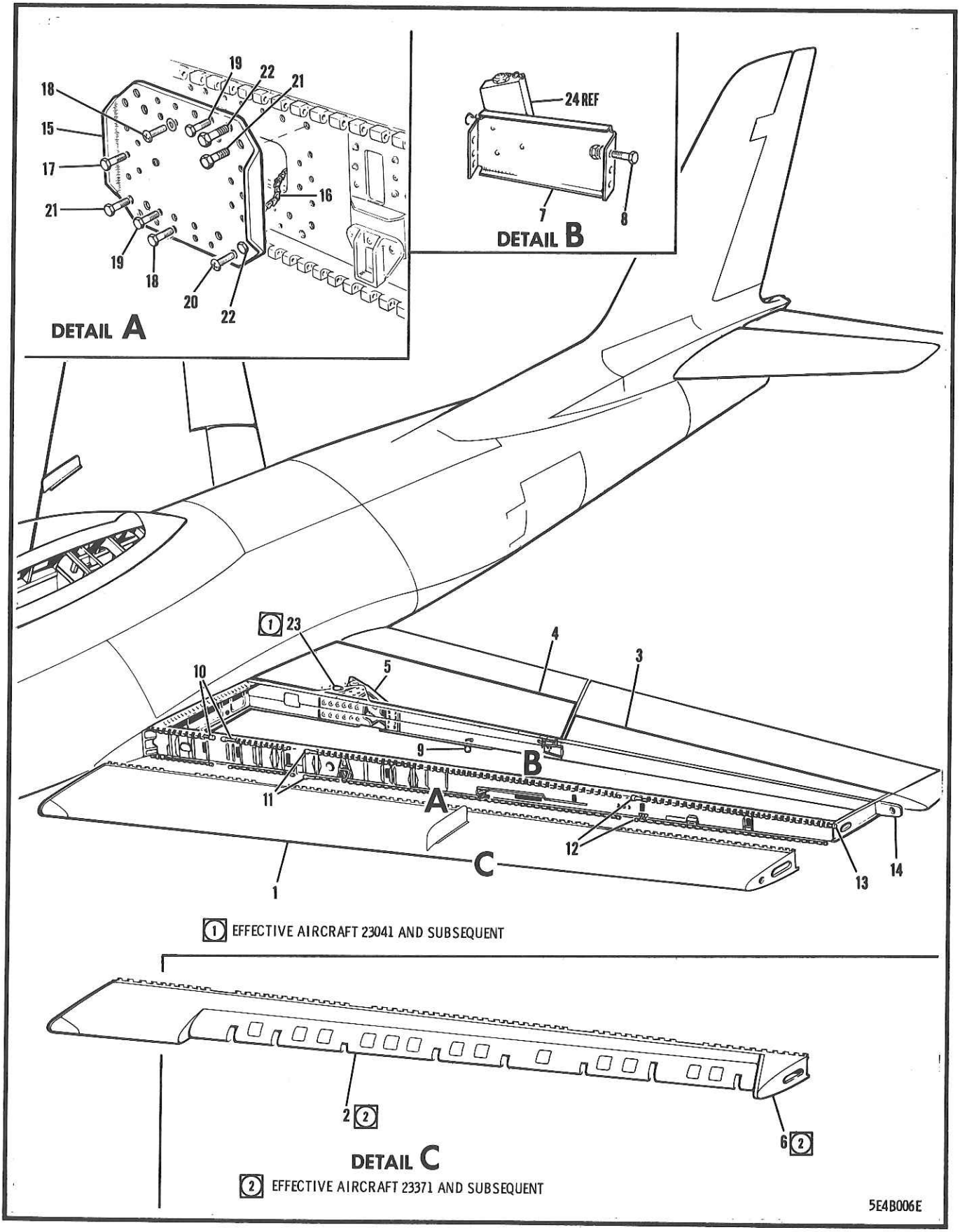

FIGURE 8 OUTER WING INTERMEDIATE PANEL

FIGURE AND INDEX NUMBER	GROUP / MAJOR ASSEMBLY / PART NUMBER	WING / OUTER WING INTERMEDIATE PANEL / 1234567 NOMENCLATURE	CODE	UNITS PER ASSY
8 -	170-14002-801	WING ASSY - PORT O/PNL INTER (SEE FIG. 6)	001-040	1
	170-14002-805	WING ASSY - PORT O/PNL INTERMEDIATE	041-100	1
	170-14002-803	WING ASSY - PORT O/PNL INTERMEDIATE	101-200	1
	170-14002-807	WING ASSY - PORT O/PNL INTERMEDIATE	201-210	1
	170-14002-809	WING ASSY - PORT O/PNL INTERMEDIATE	211-430	1
	170-14002-811	WING ASSY - PORT O/PNL INTERMEDIATE	431-530	1
	170-14002-815	WING ASSY - PORT O/PNL INTERMEDIATE	531-610	1
	170-14002-817	WING ASSY - PORT O/PNL INTERMEDIATE	611-620	1
	170-14002-813	WING ASSY - PORT O/PNL INTERMEDIATE	621-699	1
	170-14002-819	WING ASSY - PORT O/PNL INTERMEDIATE	700-736	1
	170-14002-821	WING ASSY - PORT O/PNL INTERMEDIATE	737-	1
	170-14002-802	WING ASSY - STBD O/PNL INTER (SEE FIG. 6)	001-040	1
	170-14002-806	WING ASSY - STARBOARD O/PNL INTERMEDIATE	041-100	1
	170-14002-804	WING ASSY - STARBOARD O/PNL INTERMEDIATE	101-200	1
	170-14002-808	WING ASSY - STARBOARD O/PNL INTERMEDIATE	201-210	1
	170-14002-810	WING ASSY - STARBOARD O/PNL INTERMEDIATE	211-430	1
	170-14002-812	WING ASSY - STARBOARD O/PNL INTERMEDIATE	431-530	1
	170-14002-816	WING ASSY - STARBOARD O/PNL INTERMEDIATE	531-610	1
	170-14002-814	WING ASSY - STARBOARD O/PNL INTERMEDIATE	611-699	1
	170-14002-820	WING ASSY - STARBOARD O/PNL INTERMEDIATE	700-736	1
	170-14002-822	WING ASSY - STARBOARD O/PNL INTERMEDIATE	737-	1
- 1	172-14711-851	•LEADING EDGE ASSY - PORT WING OUTER PANEL EXTENDED (SEE FIG. 15)		REF
- 2	13B-13007-1	•LEADING EDGE ASSY - PORT OUTER WING EXTENDED SLATTED (SEE FIG. 18)		REF
	172-14711-852	•LEADING EDGE ASSY - STBD WING OUTER PANEL EXTENDED (SEE FIG. 15)		REF
	13B-13007-2	•LEADING EDGE ASSY - STARBOARD OUTER WING EXTENDED SLATTED (SEE FIG. 18)		REF
- 3	170-14004-801	•BOX ASSY - PORT WOP (SEE FIG. 9)		REF
	170-14004-802	•BOX ASSY - STARBOARD WOP (SEE FIG. 9)		REF
- 4	170-14006-201	•TRAILING EDGE ASSY - PORT WING OUTER PANEL INBOARD (SEE FIG. 14)		REF
	170-14006-202	•TRAILING EDGE ASSY - STARBOARD WING OUTER PANEL INBOARD (SEE FIG. 14)		REF
- 5	140-33014-21	•FITTING INSTL - PORT MAIN LANDING GEAR (SEE SECTION 4)		REF
	140-33014-22	•FITTING INSTL - STBD MAIN LANDING GEAR (SEE SECTION 4)		REF
- 6	13B-13024-20	•WEDGE ASSY - PORT EXTN SLATTED LE TO TIP (SEE FIG. 21)		REF
	13B-13024-21	•WEDGE ASSY - STBD EXTN SLATTED LE TO TIP (SEE FIG. 21)		REF
- 7	172-58263-3	•BRACKET ASSY - PORT AILERON HYD ALTERNATE FLIGHT CONTROL RELIEF-VALVE		1
	172-58263-4	•BRACKET ASSY - STBD AILERON HYD ALTERNATE FLIGHT CONTROL RELIEF-VALVE		1
- 8	AN3-4	•BOLT - (RELIEF-VALVE BRACKET ATTACHING)		6
	AN960D3	•WASHER -		6
	AN365-1032	•NUT -		6
- 9	176-14716	•PIN ASSY - WOP STA 138 REAR SPAR (STATIC ELEC GRD FOR REFUELLING DROP TANK)	001-662	1
	176-14716-801	•PIN ASSY - WOP STA 138 REAR SPAR (STATIC ELEC GRD FOR REFUELLING DROP TANK)	663-	1
-10	2P7-13-32-11/16	•HINGE-PIN ASSY - (NAA)		4
-11	2P7-13-43-3/16	•HINGE-PIN ASSY - (NAA)		4
-12	2P7-13-35-43/64	•HINGE-PIN ASSY - (NAA)	001-370	3
	2P7-13-35-43/64	•HINGE-PIN ASSY - (NAA) (AS PER EO 05-5E-6B/9)	371-	2
	2P7-13-30-43/64	•HINGE-PIN ASSY - (NAA) (AS PER EO 05-5E-6B/9)	371-	1

FIGURE AND INDEX NUMBER	GROUP WING MAJOR ASSEMBLY OUTER WING INTERMEDIATE PANEL PART NUMBER	1234567 NOMENCLATURE	CODE	UNITS PER ASSY
8 -13	2P7-13-34-31/32	•HINGE-PIN ASSY - (NAA)	001-370	1
	2P7-13-29-31/32	•HINGE-PIN ASSY - (NAA) (AS PER EO 05-5E-6B/9)	371-	1
-14	165-14413-1	•SUPPORT ASSY - PORT WING TIP	001-610	1
	165-14413-801	•SUPPORT ASSY - PORT WING TIP	611-	1
		OR		
	165-14413-1	•SUPPORT ASSY - PORT WING TIP	611-662	
	165-14413-2	•SUPPORT ASSY - STARBOARD WING TIP	001-610	1
	165-14413-802	•SUPPORT ASSY - STARBOARD WING TIP	611-	1
		OR		
	165-14413-2	•SUPPORT ASSY - STARBOARD WING TIP	611-662	
-15	165-14107-1	•DOOR - PORT WOP FORWARD SPAR STA 148 ACC		1
	165-14107-2	•DOOR - STARBOARD WOP FWD SPAR STA 148 ACC		1
-16	9C1-3-12	•SAFETY-CHAIN - (NAA)		1
	AN515-4R7	•SCREW - (ATTACHING DOOR TO FORWARD SPAR)		1
	AN365-440	•NUT - (ATTACHING DOOR TO FORWARD SPAR)		1
-17	AN3-5A	•BOLT - (ATTACHING DOOR TO FORWARD SPAR)		10
-18	AN3-6A	•BOLT - (ATTACHING DOOR TO FORWARD SPAR)		7
-19	AN3-7A	•BOLT - (ATTACHING DOOR TO FORWARD SPAR)		7
	AN960D10	•WASHER - (ATTACHING DOOR TO FORWARD SPAR)		24
-20	NAS222-13	•SCREW - (ATTACHING DOOR TO FORWARD SPAR)		1
-21	AN4-6A	•BOLT - (ATTACHING DOOR TO FORWARD SPAR)		5
-22	AN4-7A	•BOLT - (ATTACHING DOOR TO FORWARD SPAR)		6
	AN509-516R10	•SCREW - (M/LDG/GR TRUN PIN LKG ACC HOLE) (AS PER EO 05-5E-6A/10)	001-040	1
	AN960-516	•WASHER - (AS PER EO 05-5E-6A/10)	001-040	1
	AN365-524	•NUT - (AS PER EO 05-5E-6A/10)	001-040	1
-23	170-14002-951	•COVER - M/LDG/GR TRUN PIN LKG ACCESS HOLE	041-	1
	AN509-10R12	•SCREW - (TRUNNION PIN ACC HOLE COVER ATT)	041-	1
	AN509-10R11	•SCREW - (WING HOISTING BRACKET ATTACHING)		4
-24	172-58634-5	RELIEF-VALVE ASSY - HYD AIL. ALTERNATE SURFACE CONTROL (SEE SECTION 11)		REF
		(CONTINUED SEE SECTION 4)		

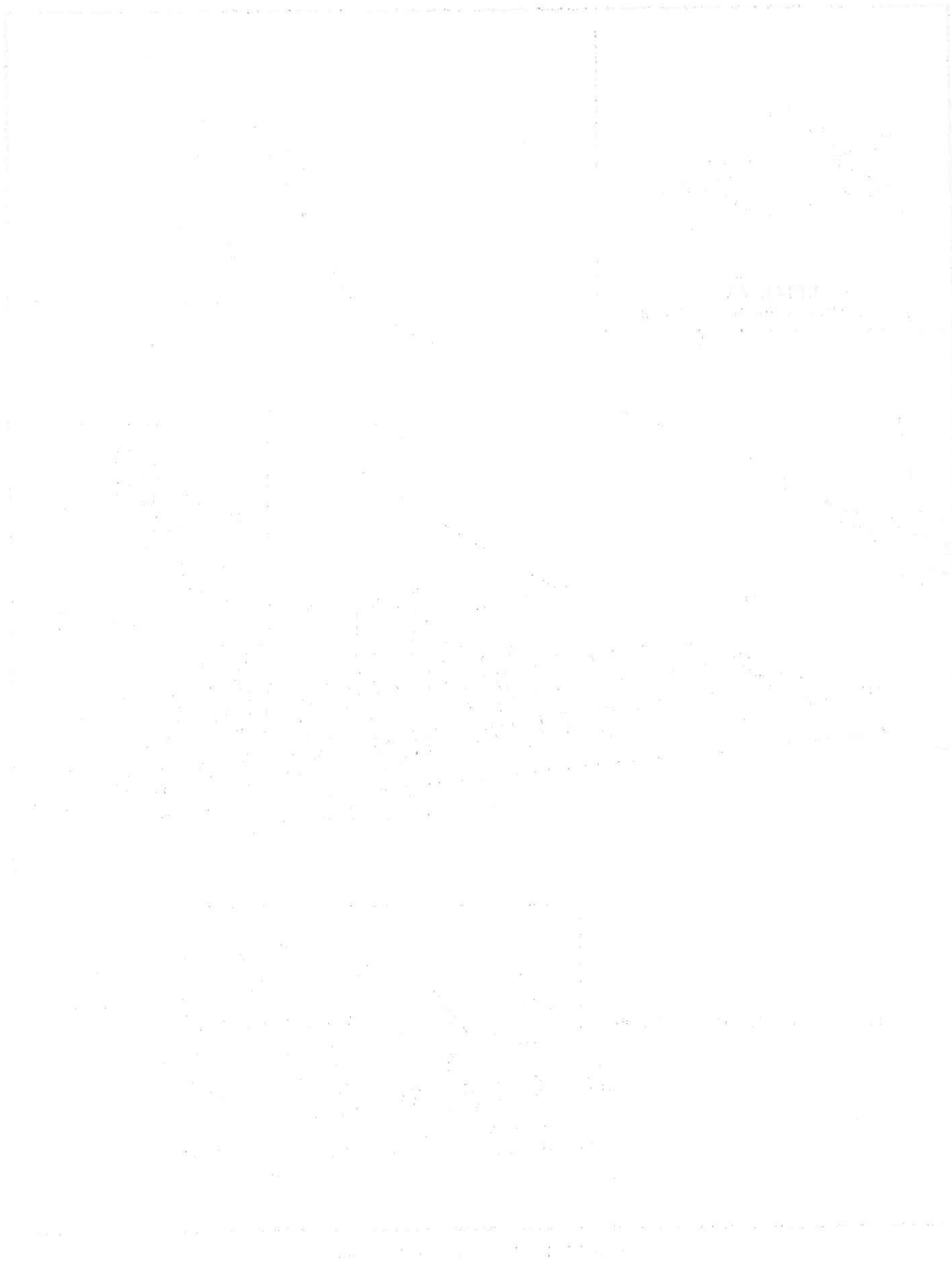

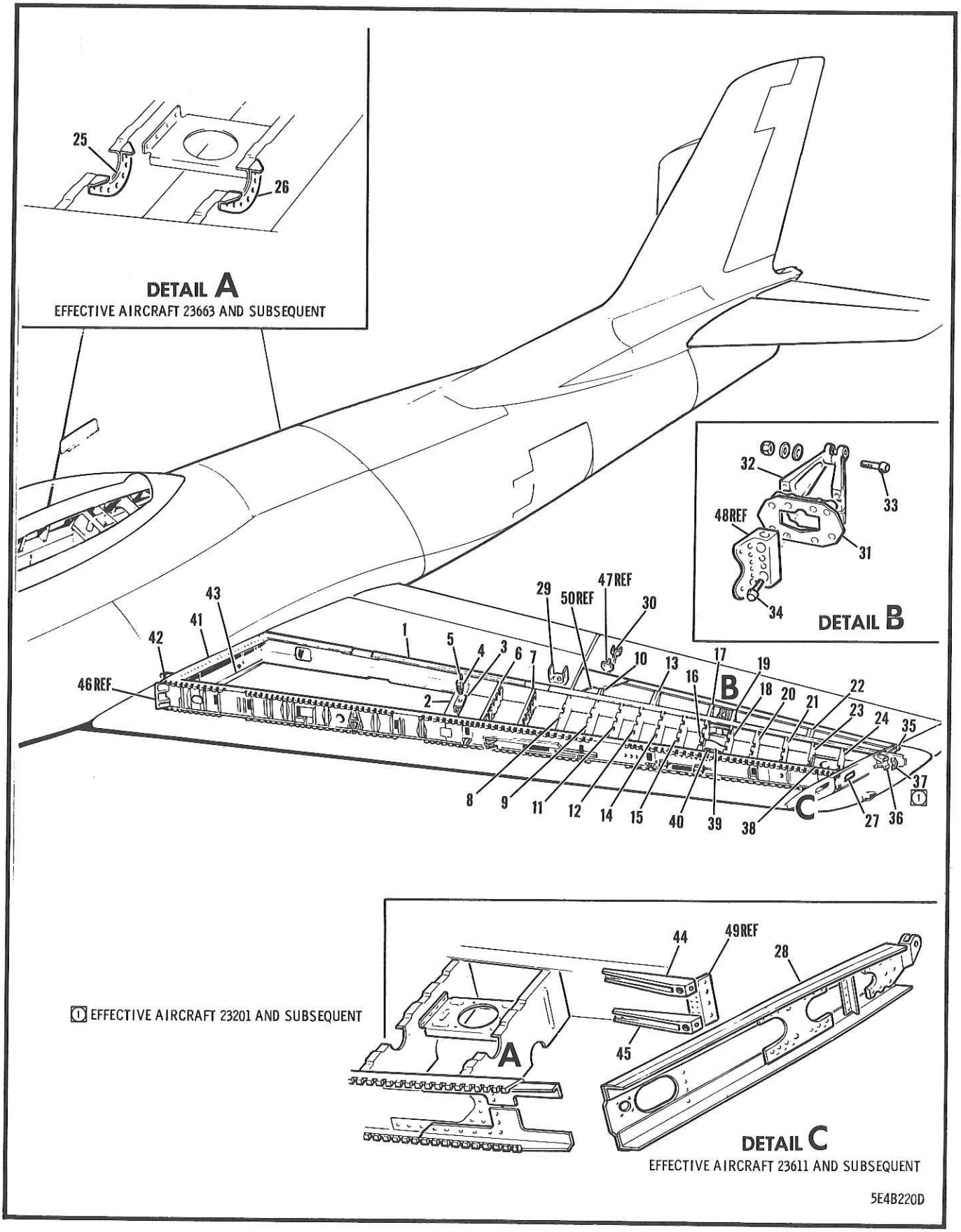

FIGURE 9 OUTER WING PANEL BOX

FIGURE AND INDEX NUMBER	GROUP WING MAJOR ASSEMBLY OUTER WING PANEL BOX PART NUMBER	1234567 NOMENCLATURE	CODE	UNITS PER ASSY
9 -	170-14004-801	BOX ASSY - PORT WING O/PNL (SEE FIG. 8)	001-040	1
	170-14004-803	BOX ASSY - PORT WING OUTER PANEL	041-210	1
	170-14004-805	BOX ASSY - PORT WING OUTER PANEL	211-530	1
	170-14004-809	BOX ASSY - PORT WING OUTER PANEL	531-610	1
	170-14004-807	BOX ASSY - PORT WING OUTER PANEL	611-699	1
	170-14004-811	BOX ASSY - PORT WING OUTER PANEL	700-	1
	170-14004-802	BOX ASSY - STARBOARD WOP (SEE FIG. 8)	001-040	1
	170-14004-804	BOX ASSY - STARBOARD WING OUTER PANEL	041-210	1
	170-14004-806	BOX ASSY - STARBOARD WING OUTER PANEL	211-530	1
	170-14004-810	BOX ASSY - STARBOARD WING OUTER PANEL	531-610	1
	170-14004-808	BOX ASSY - STARBOARD WING OUTER PANEL	611-699	1
	170-14004-812	BOX ASSY - STARBOARD WING OUTER PANEL	700-	1
- 1	170-14005-31	•SPAR ASSY - PORT WOP REAR (SEE FIG. 11)		REF
	170-14005-32	•SPAR ASSY - STBD WOP REAR (SEE FIG. 11)		REF
- 2	176-14726-801	•RIB ASSY - PORT WOP STA 126 INTERMEDIATE		1
	176-14726-802	•RIB ASSY - STARBOARD WOP STA 126 INTER		1
- 3	152-14124-15	••FITTING ASSY - PORT WING STA 126 REAR BOMB RACK SWAY-BRACE		1
	152-14124-16	••FITTING ASSY - STARBOARD WING STA 126 REAR BOMB RACK SWAY-BRACE		1
- 4	R312SH-16	•••INSERT - LOCKED-IN (ROS)		1
	RL72SB-11	•••LOCK-RING - STANDARD (ROS)		1
	176-14813	••NUT - WOP DROP FUEL TANK CTR POST ATT MPI		1
- 5	176-14767	••RETAINER - WING OUTER PANEL DROP FUEL TANK CENTRE POST ATTACHING NUT		1
- 6	176-14743-1	•RIB - PORT WOP STA 143 INTERMEDIATE		1
	176-14743-2	•RIB - STARBOARD WOP STA 143 INTERMEDIATE		1
- 7	151-14452-11	•RIB ASSY - PORT WOP STA 152 INTERMEDIATE		1
	151-14452-12	•RIB ASSY - STARBOARD WOP STA 152 INTER		1
- 8	151-14661-1	•RIB ASSY - PORT WOP STA 161 INTERMEDIATE		1
	151-14661-2	•RIB ASSY - STARBOARD WOP STA 161 INTER		1
- 9	165-14670-1	•RIB ASSY - PORT WOP STA 170 INTERMEDIATE		1
	165-14670-2	•RIB ASSY - STARBOARD WOP STA 170 INTER		1
-10	170-14607-21	•RIB ASSY - PORT WOP TE AILERON STA 7 HINGE		1
	170-14607-22	•RIB ASSY - STBD WOP TE AILERON STA 7 HINGE		1
	170-14607-19	••WEB - PORT WOP TE AILERON STA 7 HINGE		1
	170-14607-20	••WEB - STBD WOP TE AILERON STA 7 HINGE		1
	170-14607-11	••ANGLE - PORT WOP TE AILERON STA 7 HINGE		1
	170-14607-12	••ANGLE - STBD WOP TE AILERON STA 7 HINGE		1
	AN3-5A	••BOLT - (ANGLE TO WEB ATTACHING)		1
	AN960D10	••WASHER -		1
	AN365-1032	••NUT -		1
-11	165-14479-1	•RIB ASSY - PORT WOP STA 179 INTERMEDIATE		1
	165-14479-2	•RIB ASSY - STARBOARD WOP STA 179 INTER		1
-12	165-14488-1	•RIB ASSY - PORT WOP STA 188 INTERMEDIATE		1
	165-14488-2	•RIB ASSY - STARBOARD WOP STA 188 INTER		1
-13	165-14628-1	•RIB ASSY - PORT WOP TE AILERON STA 28		1
	165-14628-2	•RIB ASSY - STARBOARD WOP TE AILERON STA 28		1
-14	165-14497-1	•RIB - PORT WOP STA 197 INTERMEDIATE		1
	165-14497-2	•RIB - STARBOARD WOP STA 197 INTERMEDIATE		1
-15	165-14506-1	•RIB ASSY - PORT WOP STA 206 INTERMEDIATE		1
	165-14506-2	•RIB ASSY - STARBOARD WOP STA 206 INTER		1
-16	165-14515-1	•RIB ASSY - PORT WOP STA 215 INTERMEDIATE		1
	165-14515-2	•RIB ASSY - STARBOARD WOP STA 215 INTER		1
-17	165-14652-1	•RIB ASSY - PORT WOP TE AILERON STA 50		1
	165-14652-12	•RIB ASSY - STARBOARD WOP TE AILERON STA 50		1
-18	165-14524-1	•RIB ASSY - PORT WOP STA 224 INTERMEDIATE		1
	165-14524-2	•RIB ASSY - STARBOARD WOP STA 224 INTER		1
-19	165-14662-1	•RIB ASSY - PORT WOP TE AILERON STA 62		1
	165-14662-12	•RIB ASSY - STARBOARD WOP TE AILERON STA 62		1

FIGURE AND INDEX NUMBER	GROUP / MAJOR ASSEMBLY / PART NUMBER	WING / OUTER WING PANEL BOX / 1234567 NOMENCLATURE	CODE	UNITS PER ASSY
9 -20	165-14533-1	•RIB ASSY - PORT WOP STA 233 INTERMEDIATE		1
	165-14533-2	•RIB ASSY - STARBOARD WOP STA 233 INTER		1
-21	165-14542-1	•RIB ASSY - PORT WOP STA 242 INTERMEDIATE		1
	165-14542-2	•RIB ASSY - STARBOARD WOP STA 242 INTER		1
-22	165-14685-1	•RIB ASSY - PORT WOP TE AILERON STA 86		1
	165-14685-2	•RIB ASSY - STARBOARD WOP TE AILERON STA 86		1
-23	151-14551-1	•RIB - PORT WOP STA 251 INTERMEDIATE		1
	151-14551-2	•RIB - STARBOARD WOP STA 251 INTERMEDIATE		1
-24	151-14559-1	•RIB - PORT WOP STA 259 INTERMEDIATE		1
	151-14559-2	•RIB - STARBOARD WOP STA 259 INTERMEDIATE		1
	13B-13021-1	•CLIP INSTL - PORT WING STA 251 & 259 STGR	663-	NP
	13B-13021-2	•CLIP INSTL - STBD WING STA 251 & 259 STGR	663-	NP
-25	13B-13021-3	••CLIP - PORT WING STA 251 (RIB REINF)	663-	1
	13B-13021-4	••CLIP - STARBOARD WING STA 251 (RIB REINF)	663-	1
-26	13B-13021-15	••CLIP - PORT WING STA 259 (RIB REINF)	663-	1
	13B-13021-16	••CLIP - STARBOARD WING STA 259 (RIB REINF)	663-	1
	13B-13021-5	••SHIM - WING STA 251	663-	1
	13B-13021-7	••SHIM - WING STA 251 & 259	663-	2
	13B-13021-9	••SHIM - WING STA 251	663-	1
	13B-13021-11	••SHIM - WING STA 259	663-	1
	13B-13021-13	••SHIM - WING STA 259	663-	1
-27	165-14560-101	•RIB ASSY - PORT WOP STA 260 CANTED INTER	001-610	1
-28	165-14560-805	•RIB ASSY - PORT WOP STA 260 CANTED INTER	611-	1
	165-14560-102	•RIB ASSY - STBD WOP STA 260 CANTED INTER	001-610	1
	165-14560-806	•RIB ASSY - STBD WOP STA 260 CANTED INTER	611-	1
	2C31	••CLIP - (NAA) (AS PER EO 05-5E-6B/9)	371-	1
-29	151-14579-1	•FITTING ASSY - PORT WOP STA 151 REAR ROCKET ATTACHING		1
	151-14579-2	•FITTING ASSY - STARBOARD WOP STA 151 REAR ROCKET ATTACHING		1
	140-14181	••BUSHING - WOP ROCKET REAR SUPPORT		1
	R104SH-5	••INSERT - LOCKED-IN (ROS)		2
	RL21SB-6	••LOCK-RING - STANDARD (ROS)		2
-30	227-16007-803	•CLEVIS - PORT WING AILERON INBOARD FORWARD HINGE (AS PER EO 05-5E-6A/158)	001-699	1
	227-16007-3	•CLEVIS - PORT WING AILERON INBD FWD HINGE	700-	1
	227-16007-804	•CLEVIS - STARBOARD WING AILERON INBOARD FWD HINGE (AS PER EO 05-5E-6A/158)	001-699	1
	227-16007-4	•CLEVIS - STBD WING AILERON INBD FWD HINGE	700-	1
	170-14004-954	•SHIM - AILERON INBOARD HINGE (SERVICE EFF 001-760) OR		AR
	170-14004-975	•SHIM - AILERON INBOARD HINGE		
	170-14004-977	•SPACER - AILERON INBOARD HINGE (SERVICE EFF 001-760)		AR
	6043-4-4-4	•JUMPER - (JNI) (BONDING)		1
	NAS222-13	•SCREW - (CLEVIS ATTACHING)		1
	NAS222-14	•SCREW - (CLEVIS ATTACHING)		1
	AN365-428	•NUT -		2
-31	165-16067-5	•FITTING ASSY - PORT WING AILERON CENTRE HINGE SUPPORT		1
	165-16067-6	•FITTING ASSY - STARBOARD WING AILERON CTR HINGE SUPPORT		1
	AN5-22A	••BOLT - (FITTING ATTACHING)		1
	AN5-23A	••BOLT - (FITTING ATTACHING)		1
-32	165-16068-7	•FITTING ASSY - PORT WING AILERON CTR HINGE		1
	165-16068-8	•FITTING ASSY - STBD WING AILERON CTR HINGE		1
	AN207DP6	••BEARING - (FITTING HALVES ATTACHING)		2
-33	NAS144-30	••BOLT -		1
	NAS143-4C	••WASHER -		1
	NAS143-4	••WASHER -		1
	EB-048	••NUT - DOUBLE HEX HIGH TENSILE (ESN) OR		1
	12B-048	••NUT - (ESN) (DOUBLE HEX HIGH TENSILE)		
-34	NAS148-65	•BOLT - (FITTING ATTACHING)		4
	NAS143-8C	•WASHER -		4

FIGURE AND INDEX NUMBER	GROUP / MAJOR ASSEMBLY / PART NUMBER	WING / OUTER WING PANEL BOX / 1234567 NOMENCLATURE	CODE	UNITS PER ASSY
9 -	NAS143-8	•WASHER -		4
	EB-080	•NUT - DOUBLE HEX HIGH TENSILE (ESN)		4
-35	165-16020-1	•FITTING - PORT WING AIL• OUTBD FWD HINGE		1
		OR		
	165-16020-3	•FITTING - PORT WING AIL• OUTBD FWD HINGE		
	165-16020-2	•FITTING - STBD WING AIL• OUTBD FWD HINGE		1
		OR		
	165-16020-4	•FITTING - STBD WING AIL• OUTBD FWD HINGE		
	170-14004-971	•SHIM - AILERON OUTBOARD HINGE (SERVICE EFF 001-760)		AR
		OR		
	170-14004-979	•SHIM - AILERON OUTBOARD HINGE		
	170-14004-981	•SPACER - AILERON OUTBOARD HINGE (SERVICE EFF 001-760)		AR
	NAS221-12	•SCREW -		5
	AN365-1032	•NUT -		5
-36	165-51108-3	•SUPPORT - WOP AIRSPEED BOOM REAR BEAM ATT (STARBOARD WING) (ORDER 165-51108 FOR FUTURE PROCUREMENT)		1
	AN3-6A	•BOLT - (AIRSPEED BOOM SUPPORT ATT STBD)	001-610	2
	AN3-7A	•BOLT - (AIRSPEED BOOM SUPPORT ATT STBD)	611-	2
	AN960D10	•WASHER - (STARBOARD WING)		2
	AN365-1032	•NUT - (STARBOARD WING)		2
	NAS221-13	•SCREW -	611-	1
	AN960D10	•WASHER -	611-	1
	AN365-1032	•NUT -	611-	1
-37	165-51108-5	•SUPPORT - WOP AIRSPEED BOOM REAR BEAM ATT (STBD WING) (ORDER 165-51108 FOR FUT PROC) (FOR LOWER CODE SEE SECT• 10)	201-	1
	AN3-7A	•BOLT - (STARBOARD WING)	201-	2
	AN365-1032	•NUT - (STARBOARD WING)	201-	2
-38	191-51130	•SUPPORT ASSY - REMOTE COMPASS TRANSMITTER (PORT WING) (AS PER EO 05-5E-6A/12)	A2	1
	151-51030-15	•SUPPORT ASSY - REMOTE COMPASS TRANSMITTER (PORT WING)	101-370	1
	191-51130	•SPARE PART ASSY FOR 151-51030-15	101-370	
	170-14004-821	•ANGLE - WOP BOX (PORT WING) (MAKE FROM ALCOA 22885 X 4-1/2(ALU))	611-	1
	NAS221-14	•SCREW - (PORT WING)	611-	3
	AN960D10L	•WASHER - (PORT WING)	611-	3
	165-51106	•BRACKET ASSY - AIRSPEED LINE & DRAIN SUP• (STARBOARD WING)	001-610	1
	13B-51030	•BRACKET ASSY - AIRSPEED LINE & DRAIN SUP• (STARBOARD WING)	611-	1
	AN4-5A	•BOLT - (STARBOARD WING)	611-	4
	AN960D416	•WASHER - (STARBOARD WING)	611-	4
	AN365-428	•NUT - (STARBOARD WING)	611-	4
-39	165-16065-3	•SUPPORT - PORT WOP STA 216-224 AIL• BELCRK		1
	165-16065-4	•SUPPORT - STBD WOP STA 216-224 AIL• BELCRK		1
-40	AN4-7A	•BOLT - (AILERON BELL-CRANK SUPPORT ATT)		4
	151-14007-11	•JOINT INSTL - PORT WING BUTTOCK PLANE 29 (AS PER EO 05-5E-6B/7)		NP
	151-14007-12	•JOINT INSTL - STARBOARD WING BP 29 (AS PER EO 05-5E-6B/7)		NP
-41	140-14076-1	••FITTING ASSY - PORT WING CENTRE SECTION TO WOP UPPER OUTBOARD SPLICE		1
	140-14076-2	••FITTING ASSY - STARBOARD WING CENTRE SECTION TO WOP UPPER OUTBOARD SPLICE		1
-42	140-13035	•••SHEAR-PIN - WING CENTRE SECTION TO WING OUTER PANEL UPPER SPLICE		1
-43	140-14077-3	••FITTING - PORT WING CENTRE SECTION TO WOP LOWER OUTBOARD SPLICE		1
	140-14077-4	••FITTING - STARBOARD WING CENTRE SECTION TO WOP LOWER OUTBOARD SPLICE		1
	202-14040-953	••PLATE - PORT WOP LWR BOLTING BAR REINF (AS PER EO 05-5E-6B/7)	001-530	1

FIGURE AND INDEX NUMBER	GROUP WING MAJOR ASSEMBLY OUTER WING PANEL BOX PART NUMBER	1234567 NOMENCLATURE	CODE	UNITS PER ASSY
9 -	202-14040-3	••PLATE - PORT WOP LWR BOLTING BAR REINF	531-	1
		OR		
	202-14040-951	••PLATE - PORT WOP LWR BOLTING BAR REINF		
		OR		
	202-14040-953	••PLATE - PORT WOP LWR BOLTING BAR REINF		
	202-14040-954	••PLATE - PORT WOP LWR BOLTING BAR REINF (AS PER EO 05-5E-6B/7)	001-530	1
	202-14040-4	••PLATE - STARBOARD WING OUTER PANEL LOWER BOLTING BAR REINFORCING	531-	1
		OR		
	202-14040-952	••PLATE - STBD WOP LWR BOLTING BAR REINF		
		OR		
	202-14040-954	••PLATE - STBD WOP LWR BOLTING BAR REINF		
	202-14041-950	••SHIM - WOP LWR BOLTING BAR REINF PLATE (AS PER EO 05-5E-6B/7)		1
	202-14043-950	••SHIM - WOP LWR BOLTING BAR REINF PLATE (AS PER EO 05-5E-6B/7)		1
	HS39-12-24	••RIVET - (CAN) (AS PER EO 05-5E-6B/7)	001-530	2
	2R7-12-24	••PIN - FLAT-HEAD HI-SHEAR RIVET (NAA)	531-	2
	HS12-15	••COLLAR - (CAN) (AS PER EO 05-5E-6B/7)	001-530	2
	2R4-12	••COLLAR - HI-SHEAR RIVET (NAA)	531-	2
	HS39-10-23	••RIVET - (CAN) (AS PER EO 05-5E-6B/7)	001-530	5
	6950-S-10-20	••RIVET - (DUS)	531-	1
	2R7-10-23	••PIN - FLAT-HEAD HI-SHEAR RIVET (NAA)	531-	4
	HS39-10-22	••RIVET - (CAN) (AS PER EO 05-5E-6B/7)	001-530	4
	2R7-10-22	••PIN - FLAT-HEAD HI-SHEAR RIVET (NAA)	531-	4
	HS15-10	••COLLAR - (CAN) (AS PER EO 05-5E-6B/7)	001-530	9
	6951-S-06-6	••RIVET - (DUS) (AS PER EO 05-5E-6B/7)		2
	2R4-10	••COLLAR - HI-SHEAR RIVET (NAA)	531-	8
	170-14004-971	•SHIM - BOX WOP AILERON OUTBOARD FORWARD HINGE ALIGNING		AR
	13B-13009-1	•FITTING INSTL - PORT WOP REAR SPAR 12-IN. TIP EXTENSION	611-	NP
	13B-13009-2	•FITTING INSTL - STARBOARD REAR SPAR 12-IN. TIP EXTENSION	611-	NP
-44	13B-13009-3	••FITTING - PORT WOP REAR SPAR 12-IN. TIP EXTENSION UPPER	611-	1
	13B-13009-4	••FITTING - STARBOARD WOP REAR SPAR 12-IN. TIP EXTENSION UPPER	611-	1
-45	13B-13009-5	••FITTING - PORT WOP REAR SPAR 12-IN. TIP EXTENSION LOWER	611-	1
	13B-13009-6	••FITTING - STARBOARD WOP REAR SPAR 12-IN. TIP EXTENSION LOWER	611-	1
	13B-13009-7	••SHIM - WOP REAR SPAR 12-IN. TIP EXTENSION	611-	1
	NAS178-6-5	••PIN -	611-	12
	NAS179-6	••COLLAR -	611-	12
-46	151-14047-3	FITTING - PORT WOP FWD SPAR (SEE FIG. 10)		REF
-47	165-16111	FITTING - AILERON INBOARD HINGE ATTACHING REAR SPAR (SEE FIG. 11)		REF
-48	165-14491-1	FITTING - PORT WOP RIB TO REAR SPAR ATT STA 215 (SEE FIG. 11)		REF
-49	170-14005-805	ANGLE - WOP REAR SPAR (SEE FIG. 11)		REF
-50	170-14025-13	SKIN - PORT WOP TIP TE UPPER & LOWER TO FLAP STA 95 (SEE FIG. 12)		REF
		(CONTINUED SEE FIG. 10)		

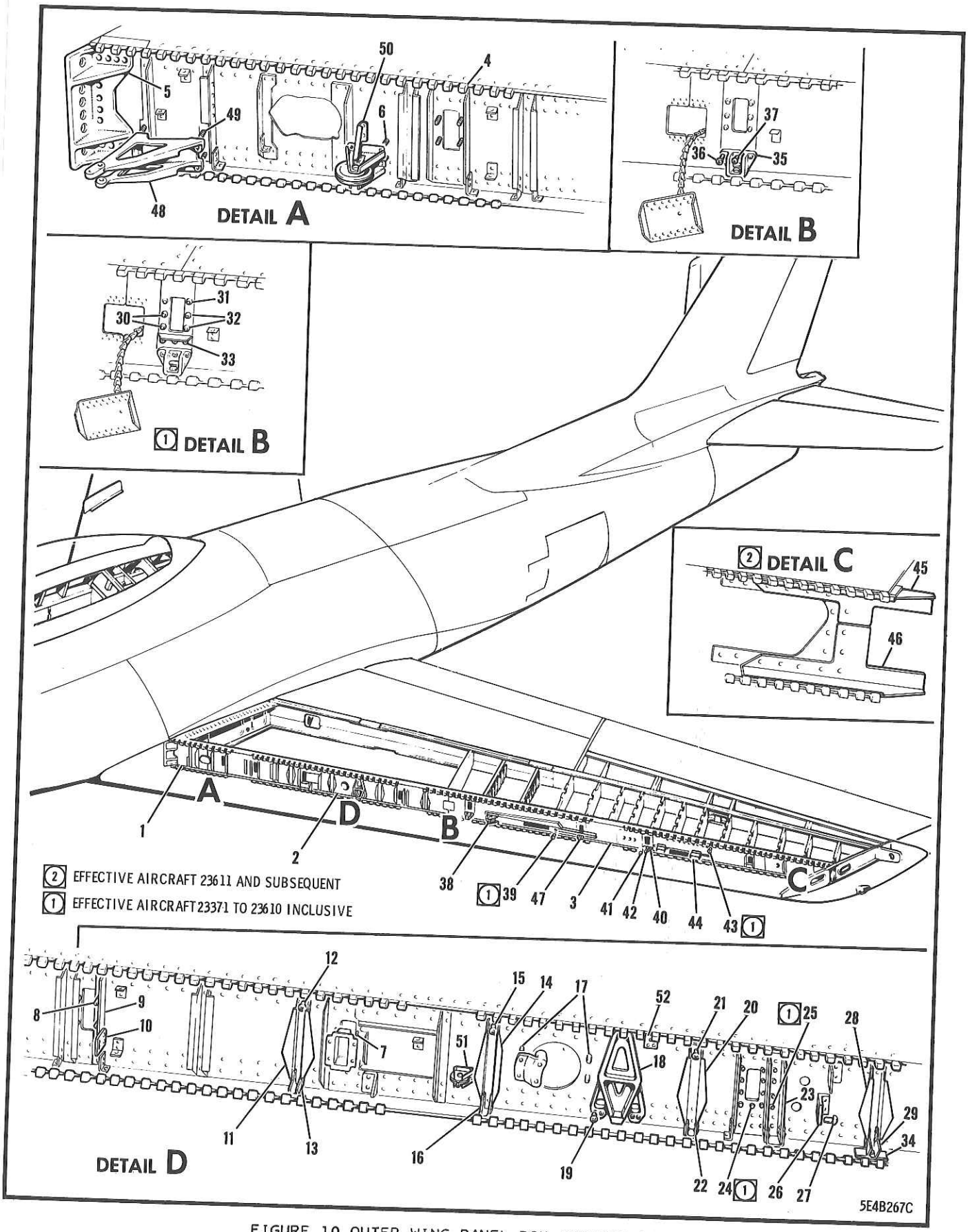

FIGURE 10 OUTER WING PANEL BOX FORWARD SPAR

FIGURE AND INDEX NUMBER	GROUP WING MAJOR ASSEMBLY OUTER WING PANEL BOX FORWARD SPAR PART NUMBER	1234567 NOMENCLATURE	CODE	UNITS PER ASSY
10 -	170-14004-801	BOX ASSY - PORT WING O/PNL (SEE FIG. 9)		REF
	170-14004-802	BOX ASSY - STBD WING O/PNL (SEE FIG. 9)		REF
- 1	170-14003-121	•SPAR ASSY - PORT WING OUTER PANEL FORWARD	001-610	1
	170-14003-801	•SPAR ASSY - PORT WING OUTER PANEL FORWARD	611-635	1
	170-14003-809	•SPAR ASSY - PORT WING OUTER PANEL FORWARD	636-	1
	170-14003-122	•SPAR ASSY - STARBOARD WING OUTER PANEL FWD	001-610	1
	170-14003-802	•SPAR ASSY - STARBOARD WING OUTER PANEL FWD	611-635	1
	170-14003-810	•SPAR ASSY - STARBOARD WING OUTER PANEL FWD	636-	1
- 2	170-14003-73	••WEB - PORT WING OUTER PANEL FORWARD SPAR (MAKE FROM 140-14054)		1
	170-14003-74	••WEB - STARBOARD WING O/PNL FORWARD SPAR (MAKE FROM 140-14054)		1
- 3	170-14512-51	••WEB ASSY - PORT WOP FORWARD SPAR OUTBOARD CLOSE-OUT	001-635	1
	170-14512-801	••WEB ASSY - PORT WOP FORWARD SPAR OUTBOARD CLOSE-OUT	636-	1
	170-14512-52	••WEB ASSY - STARBOARD WOP FORWARD SPAR OUTBOARD CLOSE-OUT	001-635	1
	170-14512-802	••WEB ASSY - STARBOARD WOP FORWARD SPAR OUTBOARD CLOSE-OUT	636-	1
- 4	170-14003-61	••JOINT - PORT WOP FORWARD SPAR INBD UPPER (MAKE FROM 140-14014-3)		1
	170-14003-62	••JOINT - STARBOARD WOP FWD SPAR INBD UPPER (MAKE FROM 140-14014-4)		1
	170-14003-59	••JOINT - PORT WOP FORWARD SPAR INBD LOWER (MAKE FROM 151-14545-3)		1
	170-14003-60	••JOINT - STARBOARD WOP FWD SPAR INBD LOWER (MAKE FROM 151-14545-4)		1
	170-14003-55	••JOINT - PORT WOP FORWARD SPAR CENTRE UP. (MAKE FROM 151-14546-3)		1
	170-14003-56	••JOINT - STARBOARD WOP FWD SPAR CENTRE UP. (MAKE FROM 151-14546-4)		1
	170-14003-53	••JOINT - PORT WOP FORWARD SPAR CENTRE LWR (MAKE FROM 151-14547-3)	001-610	1
	170-14003-959	••JOINT - PORT WOP FWD SPAR CENTRE LOWER (MAKE FROM 151-14547-951)	611-	1
	170-14003-54	••JOINT - STARBOARD WOP FWD SPAR CENTRE LWR (MAKE FROM 151-14547-4)	001-610	1
	170-14003-960	••JOINT - STARBOARD WOP FWD SPAR CENTRE LWR (MAKE FROM 151-14547-952)	611-	1
	170-14003-49	••JOINT - PORT WOP FWD SPAR OUTBOARD UPPER (MAKE FROM 151-14548-3)	001-610	1
	170-14003-957	••JOINT - PORT WOP FWD SPAR OUTBOARD UPPER (MAKE FROM 191-14548-957)	611-635	1
	170-14003-813	••JOINT - PORT WOP FWD SPAR OUTBOARD UPPER (MAKE FROM 191-14548-955)	636-	1
	170-14003-50	••JOINT - STARBOARD WOP FWD SPAR OUTBD UP. (MAKE FROM 151-14548-4)	001-610	1
	170-14003-958	••JOINT - STARBOARD WOP FWD SPAR OUTBD UP. (MAKE FROM 191-14548-958)	611-635	1
	170-14003-814	••JOINT - STARBOARD WOP FWD SPAR OUTBD UP. (MAKE FROM 191-14548-956)	636-	1
	170-14003-47	••JOINT - PORT WOP FWD SPAR OUTBOARD LOWER (MAKE FROM 151-14549-3)	001-610	1
	170-14003-955	••JOINT - PORT WOP FWD SPAR OUTBOARD LOWER (MAKE FROM 191-14549-957)	611-635	1
	170-14003-811	••JOINT - PORT WOP FWD SPAR OUTBOARD LOWER (MAKE FROM 191-14549-955)	636-	1
	170-14003-48	••JOINT - STARBOARD WOP FWD SPAR OUTBD LWR (MAKE FROM 151-14549-4)	001-610	1

FIGURE AND INDEX NUMBER	GROUP WING MAJOR ASSEMBLY OUTER WING PANEL BOX FORWARD SPAR PART NUMBER	1234567 NOMENCLATURE	CODE	UNITS PER ASSY
10 -	170-14003-956	••JOINT - STARBOARD WOP FWD SPAR OUTBD LWR (MAKE FROM 191-14549-958)	611-635	1
	170-14003-812	••JOINT - STARBOARD WOP FWD SPAR OUTBD LWR (MAKE FROM 191-14549-956)	636-	1
- 5	151-14047-3	••FITTING - PORT WING OUTER PANEL FWD SPAR		1
	151-14047-4	••FITTING - STBD WING OUTER PANEL FWD SPAR		1
	170-14003-25	••FILLER - WOP FORWARD SPAR (UPPER SURFACE)		1
	170-14003-23	••FILLER - PORT WING OUTER PANEL FWD SPAR (LOWER SURFACE)		1
	170-14003-24	••FILLER - STBD WING OUTER PANEL FWD SPAR (LOWER SURFACE)		1
- 6	AN3-5A	••BOLT - (STA 53 BRACKET ATTACHING)		4
- 7	AN3-6A	••BOLT - (STA 59 & 96 CUP ATTACHING)		8
- 8	AN3-7A	••BOLT - (STA 73 CUP ATTACHING)		4
	151-14296-11	••STIFFENER ASSY - PORT WOP FWD SPAR STA 75		1
	151-14296-12	••STIFFENER ASSY - STBD WOP FWD SPAR STA 75		1
- 9	151-14296-5	•••STIFFENER - PORT WOP FORWARD SPAR STA 75		1
	151-14296-6	•••STIFFENER - STBD WOP FORWARD SPAR STA 75		1
-10	165-52355	•••FAIRLEAD - AILERON CONTROL WING STA 75		1
-11	151-14093-5	••CHANNEL - WOP ROCKET FITTING ATTACHING		1
-12	NAS206-15	••SCREW - (CHANNEL ATTACHING)		1
	AN365-428	••NUT -		1
-13	151-14292-1	••FITTING - PORT WOP ROCKET SUPPORT MPI		1
	151-14292-2	••FITTING - STARBOARD WOP ROCKET SUP. MPI		1
-14	151-14093-7	••CHANNEL - PORT WOP ROCKET FITTING ATT		1
	151-14093-8	••CHANNEL - STARBOARD WOP ROCKET FTG ATT		1
-15	NAS206-15	••SCREW - (CHANNEL ATTACHING)		1
	AN365-428	••NUT -		1
-16	151-14292-1	••FITTING - PORT WOP ROCKET SUPPORT MPI		1
	151-14292-2	••FITTING - STARBOARD WOP ROCKET SUP. MPI		1
-17	AN3-7A	••BOLT - (TRANSMITTER SUPPORT ATTACHING)		4
-18	152-14089-9	••FITTING ASSY - PORT WOP FORWARD SPAR BOMB SUPPORT ATTACHING		1
	152-14089-10	••FITTING ASSY - STARBOARD WOP FORWARD SPAR BOMB SUPPORT ATT		1
	152-14089-7	•••FITTING - PORT WOP FWD SPAR BOMB SUP.ATT		1
	152-14089-8	•••FITTING - STBD WOP FWD SPAR BOMB SUP.ATT		1
	42D10-048	•••NUT - SPLINE (ESN)		1
	42D10-064	•••NUT - SPLINE (ESN)		2
-19	NAS205-27	••SCREW - (FITTING ATTACHING)		4
	AN365-1032	••NUT -		4
-20	151-14093-9	••CHANNEL - WOP ROCKET FITTING ATTACHING		1
-21	NAS206-15	••SCREW - (CHANNEL ATTACHING)		1
	AN365-428	••NUT -		1
-22	151-14292-1	••FITTING - PORT WOP ROCKET SUPPORT MPI	001-610	1
	151-14292-951	••FITTING - PORT WOP ROCKET SUPPORT MPI	611-	1
	151-14292-2	••FITTING - STARBOARD WOP ROCKET SUP. MPI	001-610	1
	151-14292-952	••FITTING - STARBOARD WOP ROCKET SUP. MPI	611-	1
-23	151-14293-11	••CHANNEL ASSY - PORT WOP BOMB HOIST ATT	001-610	1
	151-14293-801	••CHANNEL ASSY - PORT WOP BOMB HOIST ATT	611-	1
	151-14293-12	••CHANNEL ASSY - STBD WOP BOMB HOIST ATT	001-610	1
	151-14293-802	••CHANNEL ASSY - STBD WOP BOMB HOIST ATT	611-	1
	151-14169	•••FITTING ASSY - WOP FWD SPAR BOMB HOIST ATTACHING CHANNEL		1
	42D10-054	••••NUT - SPLINE (ESN)		1
-24	AN4-5	••BOLT - (STA 129) (AS PER EO 05-5E-6B/9)	371-610	9
-25	AN4-6	••BOLT - (STA 131) (AS PER EO 05-5E-6B/9)	371-610	4
	AN960C416	••WASHER - (AS PER EO 05-5E-6B/9)	371-610	13
	AN365-428	••NUT - (AS PER EO 05-5E-6B/9)	371-610	13
-26	165-52356-10	••FAIRLEAD - WING STA 128 AILERON CONTROL		1

FIGURE AND INDEX NUMBER	GROUP WING MAJOR ASSEMBLY OUTER WING PANEL BOX FORWARD SPAR PART NUMBER	1234567 NOMENCLATURE	CODE	UNITS PER ASSY
10 -27	NAS220-11	••SCREW - (FAIRLEAD TO BRACKET ATTACHING)		2
	AN960D8	••WASHER -		2
	AN365-832	••NUT -		2
-28	151-14093-3	••CHANNEL - WOP ROCKET FITTING ATTACHING		1
	NAS206-14	••SCREW - (CHANNEL ATTACHING)		1
	AN365-428	••NUT -		1
-29	151-14292-5	••FITTING - PORT WOP ROCKET SUPPORT MPI	001-610	1
	151-14292-955	••FITTING - PORT WOP ROCKET SUPPORT MPI	611-	1
	151-14292-6	••FITTING - STARBOARD WOP ROCKET SUP. MPI	001-610	1
	151-14292-956	••FITTING - STARBOARD WOP ROCKET SUP. MPI	611-	1
-30	BL8-8	••LOCK-BOLT - BLIND (HUC) (STA 152) (AS PER EO 05-5E-6B/9)	371-610	2
-31	BL8-10	••LOCK-BOLT - BLIND (HUC) (AS PER EO 05-5E-6B/9)	371-610	1
-32	AN4-7	••BOLT - (STA 155) (AS PER EO 05-5E-6B/9)	371-610	2
	AN960C416	••WASHER - (STA 155) (AS PER EO 05-5E-6B/9)	371-610	2
	AN365-428	••NUT - (STA 155) (AS PER EO 05-5E-6B/9)	371-610	2
-33	NAS222-16	••SCREW - (STA 152 & 155) (AS PER EO 05-5E-6B/9)	371-610	2
	NAS222-12	••SCREW - (STA 153) (AS PER EO 05-5E-6B/9)	371-610	1
	AN960C416	••WASHER - (STA 153) (AS PER EO 05-5E-6B/9)	371-610	3
	AN365-428	••NUT - (STA 153) (AS PER EO 05-5E-6B/9)	371-610	3
-34	176-14721-1	••FITTING - PORT WOP STA 138 FORWARD SPAR SWAY-BRACE BACK-UP		1
	176-14721-2	••FITTING - STBD WOP STA 138 FORWARD SPAR SWAY-BRACE BACK-UP		1
-35	165-14325	••SUPPORT - WOP STA 152 FWD SPAR LOWER CAP		1
-36	NAS221-17	••SCREW - (STA 153)	001-370	2
	NAS222-19	••SCREW - (STA 153) (AS PER EO 05-5E-6B/9)	371-610	2
	NAS222-17	••SCREW - (STA 153)	611-	2
-37	NAS221-15	••SCREW - (STA 153)	001-370	1
	NAS222-17	••SCREW - (STA 153) (AS PER EO 05-5E-6B/9)	371-610	1
	NAS222-16	••SCREW - (STA 153)	611-	1
	AN509C416R6	••SCREW - (STA 153)	611-	1
	AN365-1032	••NUT - (STA 153)	001-370	3
	AN365-428	••NUT - (STA 153) (AS PER EO 05-5E-6B/9)	371-610	3
	AN365-428	••NUT - (STA 153)	611-	4
	BL8-7	••LOCK-BOLT - BLIND (HUC) (STA 161) (AS PER EO 05-5E-6B/9)	371-610	4
-38	165-52354-1	••BRACKET ASSY - PORT WING STA 163 AILERON CONTROL PULLEY		1
	165-52354-2	••BRACKET ASSY - STARBOARD WING STA 163 AILERON CONTROL PULLEY		1
	NAS376-2	•••PULLEY -		2
	AN4-13A	•••BOLT - (PULLEY ATTACHING)		1
	AN960D416	•••WASHER -		1
	AN365-428	•••NUT -		1
	BL8-11	••LOCK-BOLT - BLIND (HUC) (STA 167) (AS PER EO 05-5E-6B/9)	371-610	4
-39	AN4-7	••BOLT - (STA 178) (AS PER EO 05-5E-6B/9)	371-610	2
	AN960C416	••WASHER - (AS PER EO 05-5E-6B/9)	371-610	2
	AN365-428	••NUT - (AS PER EO 05-5E-6B/9)	371-610	2
	BL8-5	••LOCK-BOLT - BLIND (HUC) (STA 181) (AS PER EO 05-5E-6B/9)	371-610	3
	BL8-11	••LOCK-BOLT - BLIND (HUC) (STA 180) (AS PER EO 05-5E-6B/9)	371-610	1
	BL8-5	••LOCK-BOLT - BLIND (HUC) (STA 185) (AS PER EO 05-5E-6B/9)	371-610	3
-40	165-14325	••SUPPORT - WOP STA 206 FWD SPAR LOWER CAP		1
-41	NAS221-13	••SCREW - (STA 206)	001-370	2

FIGURE AND INDEX NUMBER	GROUP / MAJOR ASSEMBLY / PART NUMBER	WING / OUTER WING PANEL BOX FORWARD SPAR / 1234567 NOMENCLATURE	CODE	UNITS PER ASSY
10 -	NAS221-14	••SCREW - (STA 206)	371-	2
-42	NAS221-14	••SCREW - (STA 206)	001-370	1
	NAS221-17	••SCREW - (STA 206)	371-	1
	AN960D10	••WASHER -	371-	3
	AN365-1032	••NUT -		3
	170-14003-963	••DOUBLER - WOP FORWARD SPAR REINFORCING	636-	1
	BL8-5	••LOCK-BOLT - BLIND (HUC) (STA 210 & 215) (AS PER EO 05-5E-6B/9)	371-610	2
-43	AN4-7	••BOLT - (STA 215 TO 224) (AS PER EO 05-5E-6B/9)	371-610	10
	AN960C416	••WASHER - (AS PER EO 05-5E-6B/9)	371-610	10
	AN365-428	••NUT - (AS PER EO 05-5E-6B/9)	371-610	10
-44	170-58145-809	••BRACKET ASSY - HYDRAULIC SUR CONTROL AIL. RV SUPPORT (AS PER EO 05-5E-6A/131)		1
	BL8-4	••LOCK-BOLT - BLIND (HUC) (STA 224) (AS PER EO 05-5E-6B/9)	371-610	1
	13B-13008-1	••FITTING INSTL - PORT WOP FWD SPAR 12-IN. TIP EXTENSION ATTACHING	611-	NP
	13B-13008-2	••FITTING INSTL - STARBOARD WOP FWD SPAR 12-IN. TIP EXTENSION ATTACHING	611-	1
-45	13B-13008-3	•••FITTING - PORT WOP FWD SPAR 12-IN. TIP EXTENSION UPPER ATTACHING	611-	1
	13B-13008-4	•••FITTING - STARBOARD WOP FWD SPAR 12-IN. TIP EXTENSION UPPER ATTACHING	611-	1
-46	13B-13008-5	•••FITTING - PORT WOP FWD SPAR 12-IN. TIP EXTENSION LOWER ATTACHING	611-	1
	13B-13008-6	•••FITTING - STARBOARD WOP FWD SPAR 12-IN. TIP EXTENSION LOWER ATTACHING	611-	1
	13B-13008-801	•••DOUBLER - WING OUTER PANEL FORWARD SPAR 12-IN. TIP EXTENSION ATTACHING	611-	1
	7S23-416-13	••SCREW - SALVAGE 100-DEG HI-SHEAR HEAD (NAA) (THROUGH UPPER SKIN PANEL & SPAR CAP) (AS PER EO 05-5E-6B/9)		10
	AN960C416	••WASHER - (AS PER EO 05-5E-6B/9)		10
	AN364-428	••NUT - (AS PER EO 05-5E-6B/9)		10
	7S23-416-13	••SCREW - SALVAGE 100-DEG HI-SHEAR HD (NAA) (THROUGH UPPER SKIN PANEL& SPAR CAP) (AS PER EO 05-5E-6B/9)		41
	AN960C416	••WASHER - (AS PER EO 05-5E-6B/9)		41
	AN364-428	••NUT - (AS PER EO 05-5E-6B/9)		41
-47	165-14325	•SUPPORT - WOP STA 183 FWD SPAR LOWER CAP		1
	151-14326	•SPLICE - WOP STA 182 FWD SPAR LOWER CAP	001-635	1
	151-14326-800	•SPLICE - WOP STA 182 FWD SPAR LOWER CAP	636-	1
	AN509-10R17	•SCREW -	001-635	2
	AN509-10R18	•SCREW -	636-	2
	AN509-10R21	•SCREW -	001-635	1
	AN509-10R22	•SCREW -	636-	1
	AN960D10	•WASHER -		3
	AN365-1032	•NUT -		3
	NAS221-15	•SCREW -	001-610	1
	NAS222-16	•SCREW -	611-	1
	NAS221-18	•SCREW -	001-610	2
	NAS222-19	•SCREW -	611-	2
	AN960D10	•WASHER -	001-610	1
	AN960D416	•WASHER -	611-	1
	AN365-1032	•NUT -	001-610	3
	AN365-428	•NUT -	611-	3
	13B-13015-1	•ANGLE - PORT WOP STA 152-161 REINFORCING FORWARD SPAR TO SKIN	611-	1
	13B-13015-2	•ANGLE - STARBOARD WOP STA 152-161 REINF FORWARD SPAR TO SKIN	611-	1

FIGURE AND INDEX NUMBER	GROUP WING MAJOR ASSEMBLY OUTER WING PANEL BOX FORWARD SPAR PART NUMBER	1234567 NOMENCLATURE	CODE	UNITS PER ASSY
10 -	NAS225-5	•SCREW - (ANGLE ATTACHING)	611-	5
	AN365-1032	•NUT -	611-	5
-48	165-52347-1	•SUPPORT - PORT WING OUTER PANEL AILERON CONTROL INBOARD BELL-CRANK		1
	165-52347-2	•SUPPORT - STARBOARD WOP AILERON CONTROL INBOARD BELL-CRANK		1
-49	AN4-10A	•BOLT - (BELL-CRANK SUPPORT ATTACHING)		2
	AN4-12A	•BOLT - (BELL-CRANK SUPPORT ATTACHING)		2
	AN960D416	•WASHER -		2
	AN365-428	•NUT -		4
-50	165-52328-1	•BRACKET ASSY - PORT WING STA 53 AIL. CTL		1
	165-52328-2	•BRACKET ASSY - STBD WING STA 53 AIL. CTL		1
	NAS376-4	••PULLEY -		2
	AN4-14A	••BOLT - (PULLEY ATTACHING)		1
	AN960D416	••WASHER -		2
	AN365-428	••NUT -		1
	AN960D10	•WASHER -		4
	AN365-1032	•NUT -		4
-51	165-52333-1	•BRACKET ASSY - PORT WING STA 104 AIL. CTL		1
	165-52333-2	•BRACKET ASSY - STBD WING STA 104 AIL. CTL		1
	165-52333-5	••BRACKET - AILERON CONTROL PORT WING UPPER		1
	165-52333-6	••BRACKET - AILERON CONTROL STBD WING UPPER		1
	165-52333-3	••BRACKET - AILERON CONTROL PORT WING LOWER		1
	165-52333-4	••BRACKET - AILERON CONTROL STBD WING LOWER		1
	NAS42DD4-56	••SPACER -		1
-52	140-14119	•FITTING ASSY - WOP FORWARD SPAR HOISTING	001-610	1
	140-14119-801	•FITTING ASSY - WOP FORWARD SPAR HOISTING	611-	1
	42D10-048	••NUT - SPLINE (ESN)		2
	AN509-416R12	•SCREW - (FITTING ATTACHING)		2
		(CONTINUED SEE FIG. 12)		

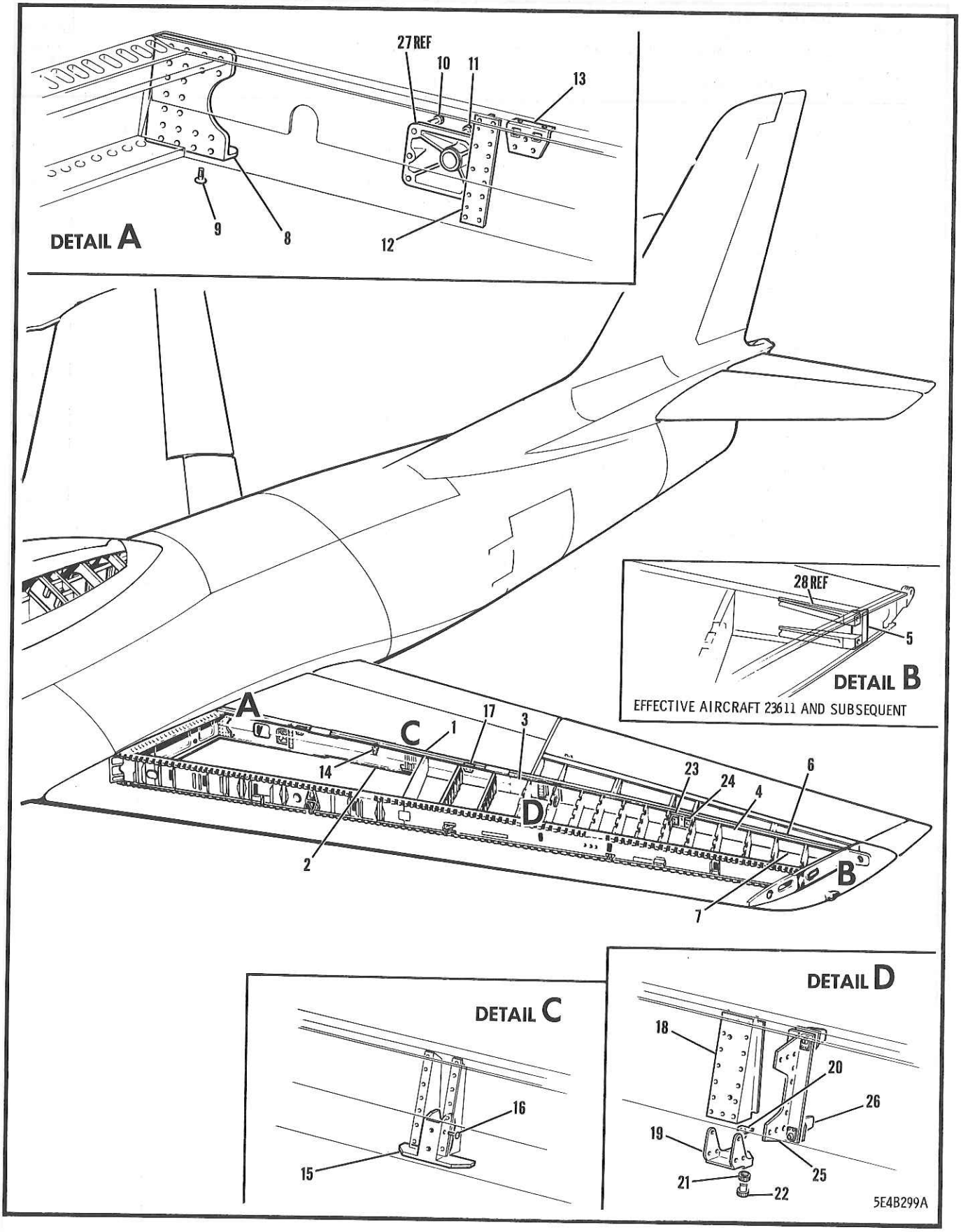

FIGURE 11 OUTER WING PANEL REAR SPAR

FIGURE AND INDEX NUMBER	GROUP WING MAJOR ASSEMBLY OUTER WING PANEL REAR SPAR PART NUMBER	1234567 NOMENCLATURE	CODE	UNITS PER ASSY
11 -	170-14005-31	SPAR ASSY - PORT WOP REAR (SEE FIG. 9)	001-040	1
	170-14005-801	SPAR ASSY - PORT WING OUTER PANEL REAR	041-610	1
	170-14005-803	SPAR ASSY - PORT WING OUTER PANEL REAR	611-	1
	170-14005-32	SPAR ASSY - STBD WOP REAR (SEE FIG. 9)	001-040	1
	170-14005-802	SPAR ASSY - STARBOARD WING OUTER PANEL REAR	041-610	1
	170-14005-804	SPAR ASSY - STARBOARD WING OUTER PANEL REAR	611-	1
- 1	151-14037-101	•CAP ASSY - PORT WING REAR UPPER SPAR STA 56-156	001-040	1
	151-14037-801	•CAP ASSY - PORT WING REAR UPPER SPAR STA 56-156	041-	1
	151-14037-102	•CAP ASSY - STBD WING REAR UPPER SPAR STA 56-156	001-040	1
	151-14037-802	•CAP ASSY - STBD WING REAR UPPER SPAR STA 56-156	041-	1
	151-14037-103	••CAP - PORT WING REAR UP. SPAR STA 56-156 (MAKE FROM 4E X 100-3/4 (NAA))	001-040	1
	151-14037-950	••CAP - PORT WING REAR UP. SPAR STA 56-156 (MAKE FROM 4E X 100-3/4 (NAA))	041-300	1
	151-14037-953	••CAP - PORT WING REAR UP. SPAR STA 56-156 (MAKE FROM 4E X 100-3/4 (NAA))	301-	1
	151-14037-104	••CAP - STBD WING REAR UP. SPAR STA 56-156 (MAKE FROM 4E X 100-3/4 (NAA))	001-040	1
	151-14037-951	••CAP - STBD WING REAR UP. SPAR STA 56-156 (MAKE FROM 4E X 100-3/4 (NAA))	041-300	1
	151-14037-954	••CAP - STBD WING REAR UP. SPAR STA 56-156 (MAKE FROM 4E X 100-3/4 (NAA))	301-	1
- 2	151-14038-201	•CAP ASSY - PORT WING REAR LOWER SPAR STA 56-156		1
	151-14038-202	•CAP ASSY - STARBOARD WING REAR LOWER SPAR STA 56-156		1
	151-14038-103	••CAP - PORT WING REAR LWR SPAR STA 56-156 (MAKE FROM 1E180 X 100-3/4 (NAA))		1
	151-14038-104	••CAP - STBD WING REAR LWR SPAR STA 56-156 (MAKE FROM 1E180 X 100-3/4 (NAA))		1
- 3	170-14005-33	•WEB - PORT WING OUTER PANEL REAR SPAR (MAKE FROM 165-14299-3)		1
	170-14005-6	•WEB - STARBOARD WING OUTER PANEL REAR SPAR (MAKE FROM 165-14299-3)		1
- 4	170-14005-3	•WEB - PORT WING OUTER PANEL REAR SPAR		1
	170-14005-40	•WEB - STARBOARD WING OUTER PANEL REAR SPAR		1
	151-14060-1	•SPLICE ASSY - PORT WING OUTER PANEL REAR SPAR STA 156 LOW CAP		1
	151-14060-2	•SPLICE ASSY - STARBOARD WING OUTER PANEL REAR SPAR STA 156 LOW CAP		1
	151-14060-3	••ANGLE - PORT WING OUTER PANEL REAR SPAR STA 156 LOW CAP SPLICE		1
	151-14060-4	••ANGLE - STARBOARD WING OUTER PANEL REAR SPAR STA 156 LOW CAP SPLICE		1
	151-14060-5	••SPACER - PORT WING OUTER PANEL REAR SPAR STA 156 LOW CAP SPLICE		1
	151-14060-6	••SPACER - STARBOARD WING OUTER PANEL REAR SPAR STA 156 LOW CAP SPLICE		1
	170-14005-7	•ANGLE - WING OUTER PANEL REAR SPAR	001-610	1
- 5	170-14005-805	•ANGLE - WING OUTER PANEL REAR SPAR	611-	1
- 6	140-14082-1	•CAP ASSY - PORT WING REAR UPPER SPAR STA 156 TO TIP		1
	140-14082-2	•CAP ASSY - STARBOARD WING REAR UPPER SPAR STA 156 TO TIP		1
	140-14082-3	••CAP - PORT WING REAR UP. SPAR STA 156 TO TIP (MAKE FROM 4E60 X 116-1/4 (NAA))		1

FIGURE AND INDEX NUMBER	GROUP WING MAJOR ASSEMBLY OUTER WING PANEL REAR SPAR PART NUMBER	1234567 NOMENCLATURE	CODE	UNITS PER ASSY
11 -	140-14082-4	••CAP - STBD WING REAR UP. SPAR STA 156 TO TIP (MAKE FROM 4E60 X 116-1/4 (NAA))		1
- 7	140-14083-21	•CAP ASSY - PORT WING REAR LOWER SPAR STA 156 TO TIP		1
	140-14083-22	•CAP ASSY - STARBOARD WING REAR LOWER SPAR STA 156 TO TIP		1
	140-14083-7	••CAP - PORT WING REAR LWR SPAR STA 156 TO TIP(MAKE FROM 1E24 X 117-11/16(NAA))		1
	140-14083-8	••CAP - STBD WING REAR LWR SPAR STA 156 TO TIP(MAKE FROM 1E24 X 117-11/16(NAA))		1
	165-16035-1	•ZED ASSY - PORT WING AILERON STA 7-28 RETAINER SUPPORT		1
	165-16035-2	•ZED ASSY - STARBOARD WING AILERON STA 7-28 RETAINER SUPPORT		1
	165-16036-11	•ZED ASSY - PORT WING AILERON STA 28-50 RETAINER SUPPORT		1
	165-16036-2	•ZED ASSY - STBD WING AILERON STA 28-50 RETAINER SUPPORT		1
	165-16037-1	•ZED ASSY - PORT WING AILERON STA 62-86 RETAINER SUPPORT		1
	165-16037-2	•ZED ASSY - STBD WING AILERON STA 62-86 RETAINER SUPPORT		1
	165-16038-1	•ZED ASSY - PORT WING AILERON STA 86-109 RETAINER SUPPORT	001-610	1
	165-16038-801	•ZED ASSY - PORT WING AILERON STA 86-109 RETAINER SUPPORT	611-	1
	165-16038-2	•ZED ASSY - STBD WING AILERON STA 86-109 RETAINER SUPPORT	001-610	1
	165-16038-802	•ZED ASSY - STBD WING AILERON STA 86-109 RETAINER SUPPORT	611-	1
- 8	172-14049-3	•FITTING - PORT WOP REAR SPAR TO FUS ATT		1
	172-14049-4	•FITTING - STBD WOP REAR SPAR TO FUS ATT		1
- 9	AN509-416R17	•SCREW - (FITTING ATTACHING)		8
	AN960D416	•WASHER -		8
	AN365-428	•NUT -		8
-10	AN4-12A	•BOLT - (RETRACTING CYLINDER FITTING ATT)		2
-11	AN4-11A	•BOLT - (RETRACTING CYLINDER FITTING ATT)		4
-12	151-14249-1	•FITTING - PORT WING OUTER PANEL M/LDG/GR RETRACTING CYLINDER SUPPORT		1
	151-14249-2	•FITTING - STARBOARD WING OUTER PANEL MAIN LDG/GR RETRACTING CYLINDER SUPPORT		1
-13	140-14058	•FITTING ASSY - REAR SPAR WOP HOISTING		1
	42D10-048	••NUT - SPLINE (ESN)		2
-14	151-48030-11	•FAIRLEAD - OUTER WING FUEL CELL FILLER SCUPPER CUP DRAIN LINE		1
-15	151-14099-1	•FITTING - PORT WING STA 126 JACK POINT		1
	151-14099-2	•FITTING - STBD WING STA 126 JACK POINT		1
-16	NAS178-8-5	•PIN - (FITTING ATTACHING)		1
	NAS179-8	•COLLAR -		4
-17	140-14058	•FITTING ASSY - REAR SPAR WOP HOISTING		4
	42D10-048	••NUT - SPLINE - (ESN)		1
-18	151-14182	•CHANNEL - WING O/PNL REAR SPAR ROCKET FITTING ATTACHING STA 166		2
-19	152-14180-1	•FITTING ASSY - PORT WING OUTER PANEL REAR ROCKET ATTACHING STA 166		1
	152-14180-2	•FITTING ASSY - STARBOARD WING OUTER PANEL REAR ROCKET ATTACHING STA 166		1
-20	140-14181	••BUSHING - WING O/PNL ROCKET REAR SUPPORT		1
-21	RL21SB-6	••LOCK-RING - STANDARD (ROS)		1
-22	R104SH-5	••INSERT - LOCKED-IN (ROS)		2

FIGURE AND INDEX NUMBER	GROUP WING MAJOR ASSEMBLY OUTER WING PANEL REAR SPAR PART NUMBER	1234567 NOMENCLATURE	CODE	UNITS PER ASSY
11 -23	165-14491-1	•FITTING - PORT WING OUTER PANEL RIB TO REAR SPAR ATTACHING STA 215		1
	165-14491-2	•FITTING - STARBOARD WING OUTER PANEL RIB TO REAR SPAR ATTACHING STA 215		1
-24	165-14490-1	•FITTING - PORT WING OUTER PANEL RIB TO REAR SPAR ATTACHING STA 224		1
	165-14490-2	•FITTING - STARBOARD WING OUTER PANEL RIB TO REAR SPAR ATTACHING STA 224		1
	AN509-416-31	•SCREW - (FITTING ATTACHING)		4
	AN960-416	•WASHER -		4
	AN365-428	•NUT -		4
-25	165-14056-1	•TEE ASSY - PORT WING OUTER PANEL REAR SPAR RIB ATTACHING STA 170		1
	165-14056-2	•TEE ASSY - STARBOARD WING OUTER PANEL REAR SPAR RIB ATTACHING STA 170		1
	165-14056-3	••TEE - PORT WOP REAR SPAR RIB ATT STA 170 (MAKE FROM 4E84 X 7 (NAA))		1
	165-14056-4	••TEE - STBD WOP REAR SPAR RIB ATT STA 170 (MAKE FROM 4E84 X 7 (NAA))		1
	S20	••SPRING - (KAY)	001-660	4
	K14	••PLATE - (KAY)	001-660	4
	AN365-428	••NUT -	001-660	4
-26	165-16111	•FITTING - AIL. INBD HINGE ATT REAR SPAR		1
	AN4-11A	•BOLT - MPI (FITTING ATTACHING)		4
	AN960D416	•WASHER -		4
-27	140-33503	FITTING ASSY - MAIN GEAR RETRACTING CYL (SEE SECTION 4)		REF
-28	13B-13009-3	FITTING - PORT WOP REAR SPAR 12-IN. EXTN TIP (SEE FIG. 9)		REF

-000-

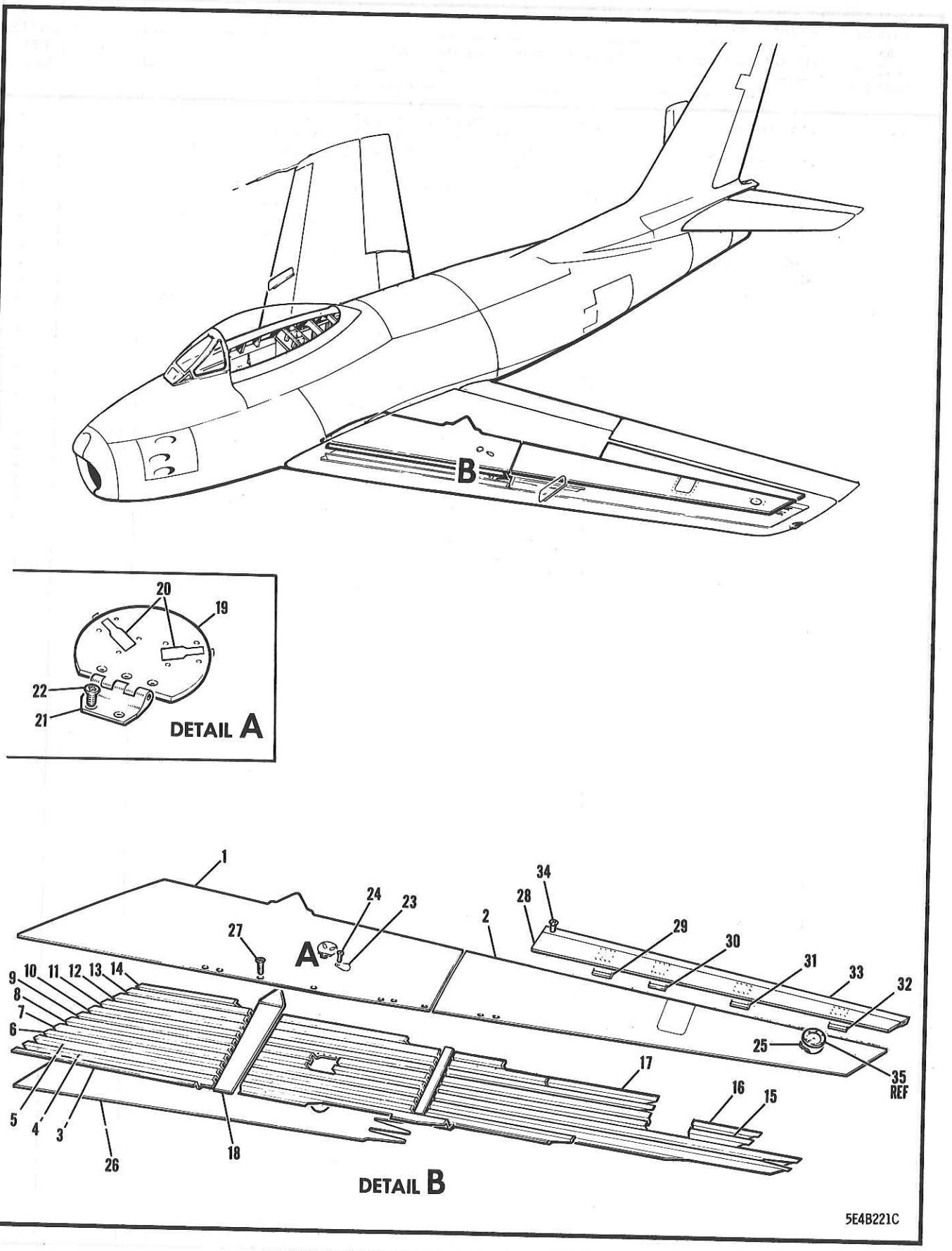

FIGURE 12 OUTER WING PANEL UPPER SKINS

FIGURE AND INDEX NUMBER	GROUP WING MAJOR ASSEMBLY OUTER WING PANEL UPPER SKINS PART NUMBER	1234567 NOMENCLATURE	CODE	UNITS PER ASSY
12 -	170-14004-801	BOX ASSY - PORT WING O/PNL (SEE FIG. 9)		REF
	170-14004-802	BOX ASSY - STBD WING O/PNL (SEE FIG. 9)		REF
	151-14600-301	•SKIN ASSY - PORT WING O/PNL INBOARD UPPER	001-040	1
	151-14600-801	•SKIN ASSY - PORT WING O/PNL INBOARD UPPER	041-610	1
	151-14600-803	•SKIN ASSY - PORT WING O/PNL INBOARD UPPER	611-635	1
	151-14600-805	•SKIN ASSY - PORT WING O/PNL INBOARD UPPER	636-	1
	151-14600-302	•SKIN ASSY - STARBOARD WOP INBOARD UPPER	001-040	1
	151-14600-802	•SKIN ASSY - STARBOARD WOP INBOARD UPPER	041-610	1
	151-14600-804	•SKIN ASSY - STARBOARD WOP INBOARD UPPER	611-635	1
	151-14600-806	•SKIN ASSY - STARBOARD WOP INBOARD UPPER	636-	1
	170-14115-201	••SKIN ASSY - PORT WOP INTERMEDIATE UPPER	001-040	1
	170-14115-801	••SKIN ASSY - PORT WOP INTERMEDIATE UPPER	041-610	1
	170-14115-803	••SKIN ASSY - PORT WOP INTERMEDIATE UPPER	611-635	1
	170-14115-805	••SKIN ASSY - PORT WOP INTERMEDIATE UPPER	636-	1
	170-14115-202	••SKIN ASSY - STARBOARD WOP INTER UPPER	001-040	1
	170-14115-802	••SKIN ASSY - STARBOARD WOP INTER UPPER	041-610	1
	170-14115-804	••SKIN ASSY - STARBOARD WOP INTER UPPER	611-635	1
	170-14115-806	••SKIN ASSY - STARBOARD WOP INTER UPPER	636-	1
- 1	170-14115-105	•••SKIN - PORT WOP INTER UPPER OUTER INBD STA 35-152 (MAKE FROM 151-14404-1)		1
	170-14115-106	•••SKIN - STBD WOP INTER UPPER OUTER INBD STA 35-152 (MAKE FROM 151-14404-2)		1
- 2	170-14115-5	•••SKIN - PORT WING OUTER PANEL INTER UPPER OUTER OUTBOARD STA 152-272	001-610	1
	170-14115-973	•••SKIN - PORT WING OUTER PANEL INTER UPPER OUTER OUTBOARD STA 152-272	611-635	1
	170-14115-807	•••SKIN - PORT WING OUTER PANEL INTER UPPER OUTER OUTBOARD STA 152-272	636-	1
	170-14115-6	•••SKIN - STARBOARD WOP INTER UPPER OUTER OUTBOARD STA 152-272	001-610	1
	170-14115-974	•••SKIN - STARBOARD WOP INTER UPPER OUTER OUTBOARD STA 152-272	611-635	1
	170-14115-808	•••SKIN - STARBOARD WOP INTER OUTER UPPER OUTBOARD STA 152-272	636-	1
- 3	170-14115-11	•••STRINGER ASSY - PORT WOP INTER UP. NO. 2		1
	170-14115-12	•••STRINGER ASSY - STBD WOP INTER UP. NO. 2		1
- 4	170-14115-9	•••STRINGER - PORT WOP INTER UPPER NO. 3 (MAKE FROM 6E141 X 138-1/2 (NAA))		1
	170-14115-10	•••STRINGER - STARBOARD WOP INTER UP. NO. 3 (MAKE FROM 6E141 X 128-1/2 (NAA))		1
- 5	170-14115-13	•••STRINGER - PORT WOP INTER UPPER NO. 4 (MAKE FROM 6E141 X 136-1/2 (NAA))		1
	170-14115-14	•••STRINGER - STARBOARD WOP INTER UP. NO. 4 (MAKE FROM 6E141 X 136-1/2 (NAA))		1
- 6	172-14732-1	•••STRINGER - PORT WOP INBD UPPER NO. 5 (MAKE FROM 6E178 X 57-7/8 (NAA))		1
	172-14732-2	•••STRINGER - STARBOARD WOP INBD UP. NO. 5 (MAKE FROM 6E278 X 57-7/8 (NAA))		1
- 7	170-14115-17	•••STRINGER - PORT WOP INTER UPPER NO. 6 (MAKE FROM 6E141 X 80 (NAA))		1
	170-14115-18	•••STRINGER - STARBOARD WOP INTER UP. NO. 6 (MAKE FROM 6E141 X 80 (NAA))		1
- 8	170-14115-19	•••STRINGER - PORT WOP INTER UPPER NO. 7 (MAKE FROM 6E141 X 67-1/2 (NAA))		1
	170-14115-20	•••STRINGER - STARBOARD WOP INTER UP. NO. 7 (MAKE FROM 6E141 X 67-1/2 (NAA))		1
- 9	170-14115-21	•••STRINGER ASSY - PORT WOP INTER UP. NO. 8		1
	170-14115-22	•••STRINGER ASSY - STBD WOP INTER UP. NO. 8		1
-10	170-14115-41	•••STRINGER ASSY - PORT WOP INTER UP. NO. 9		1
	170-14115-42	•••STRINGER ASSY - STBD WOP INTER UP. NO. 9		1

FIGURE AND INDEX NUMBER	GROUP WING MAJOR ASSEMBLY OUTER WING PANEL UPPER SKINS PART NUMBER	1234567 NOMENCLATURE	CODE	UNITS PER ASSY
12 -11	170-14115-51	•••STRINGER ASSY - PORT WOP INTER UP. NO.10		1
	170-14115-52	•••STRINGER ASSY - STBD WOP INTER UP. NO.10		1
-12	151-14225-1	•••STRINGER - PORT WOP INBD UPPER NO. 11 (MAKE FROM 6E178 X 77-3/4 (NAA))		1
	151-14225-2	•••STRINGER - STBD WOP INBD UPPER NO. 11 (MAKE FROM 6E178 X 77-3/4 (NAA))		1
-13	151-14226-1	•••STRINGER - PORT WOP INBD UPPER NO. 12 (MAKE FROM 6E178 X 19-15/32 (NAA))		1
	151-14226-2	•••STRINGER - STBD WOP INBD UPPER NO. 12 (MAKE FROM 6E178 X 19-15/32 (NAA))		1
-14	151-14234-1	•••DOUBLER - PORT WOP INBD UP. NO. 12 STGR		1
	151-14234-2	•••DOUBLER - STBD WOP INBD UP. NO. 12 STGR		1
-15	170-14115-93	•••STRINGER - PORT WOP UPPER STA 130-195 (MAKE FROM 6E141 X 72-5/16 (NAA))		1
	170-14115-94	•••STRINGER - STARBOARD WOP UP. STA 130-195 (MAKE FROM 6E141 X 72-5/16 (NAA))		1
-16	170-14115-25	•••STRINGER - PORT WOP UPPER STA 120-215 (MAKE FROM 6E141 X 91-3/8 (NAA))		1
	170-14115-26	•••STRINGER - STARBOARD WOP UP. STA 120-215 (MAKE FROM 6E141 X 91-3/8 (NAA))		1
-17	170-14115-37	•••STRINGER - PORT WOP UPPER STA 130-210 (MAKE FROM 6E141 X 63-5/16 (NAA))		1
	170-14115-38	•••STRINGER - STARBOARD WOP UP. STA 130-210 (MAKE FROM 6E141 X 63-5/16 (NAA))		1
-18	140-14206-1	•••STRAP - PORT WING OUTER PANEL STA 94 TO LANDING GEAR ATTACHING UPPER	001-020	1
	140-14206-951	•••STRAP - PORT WING OUTER PANEL STA 94 TO LANDING GEAR ATTACHING UPPER	021-	1
	140-14206-2	•••STRAP - STBD WING OUTER PANEL STA 94 TO LANDING GEAR ATTACHING UPPER	001-020	1
	140-14206-952	•••STRAP - STBD WING OUTER PANEL STA 94 TO LANDING GEAR ATTACHING UPPER	021-	1
	151-48026-21	•••CUP ASSY - PORT WING FUEL CELL FILLER		1
	151-48026-22	•••CUP ASSY - STBD WING FUEL CELL FILLER		1
	140-48019	•••DOUBLER - WING FUEL CELL FILLER		1
-19	151-48029-11	•••DOOR ASSY - WING FUEL CELL FILLER		1
-20	H5000-2091-125	••••LATCH ASSY - FLUSH (HAS)		2
-21	120-48079-10	••••HINGE ASSY - WING FUEL CELL FILLER		1
-22	NAS205-11	•••SCREW - (FUEL CELL FILLER DOOR HNG ATT)		2
-23	172-14736	•••COVER ASSY - WING OUTER PANEL BOMB RACK SWAY-BRACE FITTING ACCESS HOLE		1
-24	7S13-1032-14	•••SCREW - 100-DEG RECESSED FLUSH HD (NAA) (COVER ATTACHING)		1
	AN960D10	•••WASHER -		1
	AN380-2-2	•••PIN -		1
	151-14235	•••DOUBLER - PORT WING OUTER PANEL COMPASS ACCESS HOLE STA 255		1
-25	9C1-1-5	•••CHAIN - BEAD (NAA) (PORT WING)		1
	2C28	•••CLIP - BALL CHAIN ATTACHING (NAA)		1
-26	151-14600-11	••SKIN - PORT WING O/PNL INBOARD UP. INNER		1
	151-14600-12	••SKIN - STARBOARD WOP INBD UPPER INNER		1
	151-14600-13	••DOUBLER - WING O/PNL FUEL CELL FILLER		1
	NAS222-11	••SCREW - (INNER SKIN ATTACHING)		7
	NAS222-12	••SCREW - (INNER SKIN ATTACHING)		21
	AN960D416	••WASHER -		14
	AN365-428	••NUT -		28
	NAS221-12	••SCREW -		12
	NAS221-10	••SCREW -		10
	AN960D10	••WASHER -		22
	AN365-1032	••NUT -		22

FIGURE AND INDEX NUMBER	GROUP WING MAJOR ASSEMBLY OUTER WING PANEL UPPER SKINS PART NUMBER	1234567 NOMENCLATURE	CODE	UNITS PER ASSY
12 -27	AN509-416R13	•SCREW - (UPPER SKIN ATTACHING)		8
	AN960D416	•WASHER -		8
	AN365-428	•NUT -		8
	AN509-10R10	•SCREW - (UPPER SKIN ATTACHING)	A4	24
	AN509-10R10	•SCREW - (UPPER SKIN ATTACHING) (AS PER EO 05-5E-6B/9)	371-610	23
	AN960-10	•WASHER -		2
	AN960D10	•WASHER -	A4	22
	AN960D10	•WASHER - (AS PER EO 05-5E-6B/9)	371-610	21
	AN365-1032	•NUT -	A4	24
	AN365-1032	•NUT - (AS PER EO 05-5E-6B/9)	371-610	23
	170-14025-801	•SKIN ASSY - PORT WOP FLAP STA 95 TO TIP TE UPPER (AS PER EO 05-5E-6A/121)		1
	170-14025-802	•SKIN ASSY - STARBOARD WOP FLAP STA 95 TO TIP TE UP• (AS PER EO 05-5E-6A/121)		1
-28	170-14025-13	••SKIN - PORT WING OUTER PANEL FLAP STA 95 TO TIP TRAILING EDGE UPPER		1
	170-14025-14	••SKIN - STARBOARD WING OUTER PANEL FLAP STA 95 TO TIP TRAILING EDGE UPPER		1
-29	170-14025-15	••DOUBLER - PORT WING OUTER PANEL FLAP STA 95 TO TIP TRAILING EDGE UPPER		1
	170-14025-16	••DOUBLER - STARBOARD WING OUTER PANEL FLAP STA 95 TO TIP TRAILING EDGE UPPER		1
-30	170-14025-17	••DOUBLER - PORT WING OUTER PANEL FLAP STA 95 TO TIP TRAILING EDGE UPPER		1
	170-14025-18	••DOUBLER - STARBOARD WING OUTER PANEL FLAP STA 95 TO TIP TRAILING EDGE UPPER		1
-31	170-14025-19	••DOUBLER - PORT WING OUTER PANEL FLAP STA 95 TO TIP TRAILING EDGE UPPER		1
	170-14025-20	••DOUBLER - STARBOARD WING OUTER PANEL FLAP STA 95 TO TIP TRAILING EDGE UPPER		1
-32	170-14025-23	••DOUBLER - PORT WING OUTER PANEL FLAP STA 95 TO TIP TRAILING EDGE UPPER		1
	170-14025-24	••DOUBLER - STARBOARD WING OUTER PANEL FLAP STA 95 TO TIP TRAILING EDGE UPPER		1
-33	165-14239-1	••TRAILING EDGE - PORT WING OUTER PANEL AILERON STA 0 TO 114 UPPER		1
	165-14239-2	••TRAILING EDGE - STARBOARD WING OUTER PANEL AILERON STA 0 TO 114 UPPER		1
-34	AN509-10R10	•SCREW - (TRAILING EDGE SKIN ATTACHING)		28
-35	140-14062	DOOR ASSY - PORT WOP REMOTE IND COMPASS ACC (SEE FIG. 7)		REF
		(CONTINUED SEE FIG. 13)		

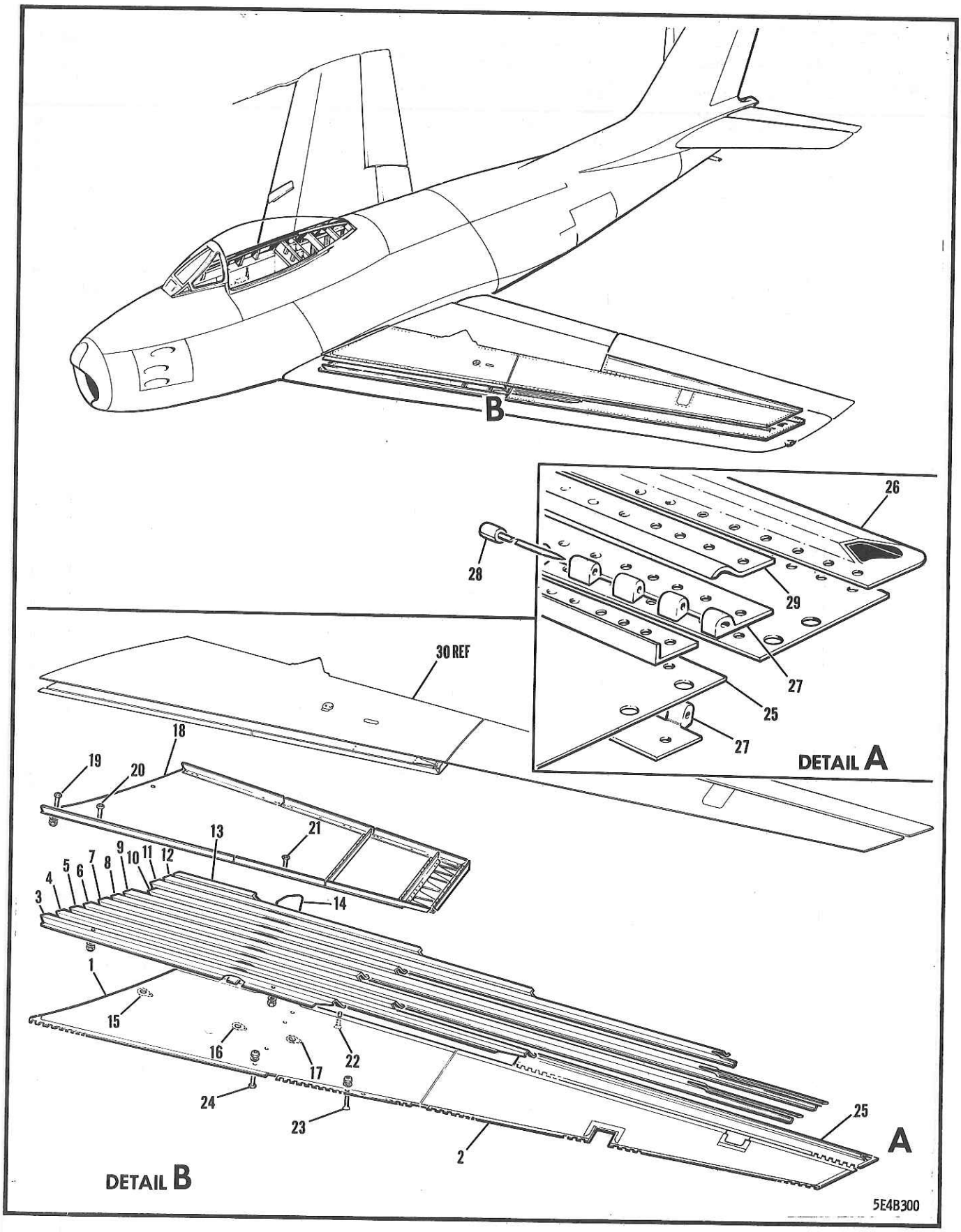

FIGURE 13 OUTER WING PANEL LOWER SKINS

FIGURE AND INDEX NUMBER	GROUP WING MAJOR ASSEMBLY OUTER WING PANEL LOWER SKINS PART NUMBER	1234567 NOMENCLATURE	CODE	UNITS PER ASSY
13 -	170-14004-801	BOX ASSY - PORT WING O/PNL (SEE FIG. 9)		REF
	170-14004-802	BOX ASSY - STBD WING O/PNL (SEE FIG. 9)		REF
	151-14603-301	•SKIN ASSY - PORT WOP INBOARD LOWER	001-210	1
	151-14603-801	•SKIN ASSY - PORT WOP INBOARD LOWER	211-610	1
	151-14603-803	•SKIN ASSY - PORT WOP INBOARD LOWER	611-635	1
	151-14603-805	•SKIN ASSY - PORT WOP INBOARD LOWER	636-	1
	151-14603-302	•SKIN ASSY - STARBOARD WOP INBOARD LOWER	001-210	1
	151-14603-802	•SKIN ASSY - STARBOARD WOP INBOARD LOWER	211-610	1
	151-14603-804	•SKIN ASSY - STARBOARD WOP INBOARD LOWER	611-635	1
	151-14603-806	•SKIN ASSY - STARBOARD WOP INBOARD LOWER	636-	1
	170-14116-101	••SKIN ASSY - PORT WOP INTERMEDIATE LOWER	001-210	1
	170-14116-801	••SKIN ASSY - PORT WOP INTERMEDIATE LOWER	211-610	1
	170-14116-803	••SKIN ASSY - PORT WOP INTERMEDIATE LOWER	611-635	1
	170-14116-805	••SKIN ASSY - PORT WOP INTERMEDIATE LOWER	636-	1
	170-14116-102	••SKIN ASSY - STARBOARD WOP INTER LOWER	001-210	1
	170-14116-802	••SKIN ASSY - STARBOARD WOP INTER LOWER	211-610	1
	170-14116-804	••SKIN ASSY - STARBOARD WOP INTER LOWER	611-635	1
	170-14116-806	••SKIN ASSY - STARBOARD WOP INTER LOWER	636-	1
- 1	170-14116-69	•••SKIN - PORT WOP INTERMEDIATE LOWER (MAKE FROM 151-14409)	001-210	1
	170-14116-950	•••SKIN - PORT WOP INTERMEDIATE LOWER	211-	1
	170-14116-70	•••SKIN - STARBOARD WOP INTERMEDIATE LOWER	001-610	1
	170-14116-951	•••SKIN - STARBOARD WOP INTERMEDIATE LOWER	611-	1
	170-14116-955	•••COVER - WING O/PNL INTERMEDIATE LOWER		2
	AN509-10R10	•••SCREW -		4
- 2	170-14116-65	•••SKIN - PORT WOP INTERMEDIATE LOWER OUTBD	001-610	1
	170-14116-969	•••SKIN - PORT WOP INTERMEDIATE LOWER OUTBD (MAKE FROM 140-14103-3)	611-635	1
	170-14116-807	•••SKIN - PORT WOP INTERMEDIATE LOWER OUTBD (MAKE FROM 140-14103-801)	636-	1
	170-14116-66	•••SKIN - STARBOARD WOP INTER LOWER OUTBD	001-610	1
	170-14116-970	•••SKIN - STARBOARD WOP INTER LOWER OUTBD (MAKE FROM 140-14103-4)	611-635	1
	170-14116-808	•••SKIN - STARBOARD WOP INTER LOWER OUTBD (MAKE FROM 140-14103-802)	636-	1
- 3	170-14116-61	•••STRINGER ASSY - PORT WING O/PNL LOWER		1
	170-14116-62	•••STRINGER ASSY - STARBOARD WOP LOWER		1
- 4	170-14116-59	•••STRINGER ASSY - PORT WING O/PNL LOWER		1
	170-14116-60	•••STRINGER ASSY - STARBOARD WOP LOWER		1
- 5	170-14116-19	•••STRINGER - PORT WOP INTERMEDIATE LOWER (MAKE FROM 6E141 X 105 (NAA))		1
	170-14116-20	•••STRINGER - STARBOARD WOP INTER LOWER (MAKE FROM 6E141 X 105 (NAA))		1
- 6	170-14116-57	•••STRINGER ASSY - PORT WOP INTER LOWER	001-610	1
	170-14116-961	•••STRINGER ASSY - PORT WOP INTER LOWER	611-	1
	170-14116-58	•••STRINGER ASSY - STARBOARD INTER LOWER	001-610	1
	170-14116-962	•••STRINGER ASSY - STARBOARD INTER LOWER	611-	1
- 7	170-14116-15	•••STRINGER - PORT WOP INTERMEDIATE LOWER (MAKE FROM 6E141 X 81 (NAA))		1
	170-14116-16	•••STRINGER - STARBOARD WOP INTER LOWER (MAKE FROM 6E141 X 81 (NAA))		1
- 8	170-14116-55	•••STRINGER ASSY - PORT WOP INTER LOWER	001-610	1
	170-14116-963	•••STRINGER ASSY - PORT WOP INTER LOWER	611-	1
	170-14116-56	•••STRINGER ASSY - STARBOARD WOP INTER LWR	001-610	1
	170-14116-964	•••STRINGER ASSY - STARBOARD WOP INTER LWR	611-	1
- 9	170-14116-11	•••STRINGER - PORT WOP INTERMEDIATE LOWER (MAKE FROM 6E141 X 88 (NAA))		1
	170-14116-12	•••STRINGER - STARBOARD WOP INTER LOWER (MAKE FROM 6E141 X 88 (NAA))		1
-10	170-14116-53	•••STRINGER ASSY - PORT WOP INTER LOWER		1

FIGURE AND INDEX NUMBER	GROUP WING MAJOR ASSEMBLY OUTER WING PANEL LOWER SKINS PART NUMBER	1234567 NOMENCLATURE	CODE	UNITS PER ASSY
13 -	170-14116-54	•••STRINGER ASSY - STARBOARD WOP INTER LWR		1
-11	170-14116-71	•••STRINGER ASSY - PORT WOP INTER LOWER		1
	170-14116-72	•••STRINGER ASSY - STARBOARD WOP INTER LWR		1
-12	170-14116-51	•••STRINGER ASSY - PORT WOP INTER LOWER		1
	170-14116-52	•••STRINGER ASSY - STARBOARD WOP INTER LWR		1
-13	170-14116-3	•••STRINGER - PORT WOP INTERMEDIATE LOWER (MAKE FROM 6E141 X 40) (NAA)		1
	170-14116-4	•••STRINGER - STARBOARD WOP INTER LOWER		1
-14	140-14208-1	•••STRAP - PORT WING OUTER PANEL STA 99 TO LANDING GEAR ATTACHING LOWER		1
	140-14208-2	•••STRAP - STBD WING OUTER PANEL STA 99 TO LANDING GEAR ATTACHING LOWER		1
-15	140-14158	•••COVER - WOP FUEL TANK SUMP DRAIN		1
	7S13-1032C-14	•••SCREW - 100 DEG FLUSH HEAD CRE		1
	AN960D10	•••WASHER -		1
	AN380-2-2	•••PIN -		1
-16	140-14147-5	•••COVER - WING O/PNL BOMB SUPPORT OPEN		1
	7S13-1032C-14	•••SCREW - 1000 FLUSH HEAD CRE		1
	AN960D10	•••WASHER -		1
	AN380-2-2	•••PIN -		1
-17	140-14147-3	•••COVER - WING O/PNL BOMB SUPPORT OPEN		1
	7S13-1032C-16	•••SCREW - 100-DEG FLUSH HEAD CRE		1
	AN960D10	•••WASHER -		1
	AN380-2-2	•••PIN -		1
-18	151-14603-13	••SKIN - PORT WOP INBOARD LOWER INNER	001-210	1
	151-14603-953	••SKIN - PORT WOP INBOARD LOWER INNER	211-	1
		OR		
	151-14603-13	••SKIN - PORT WOP INBOARD LOWER INNER	211-	
	151-14603-14	••SKIN - STARBOARD WOP INBOARD LOWER INNER	001-210	1
	151-14603-954	••SKIN - STARBOARD WOP INBOARD LOWER INNER	211-	1
		OR		
	151-14603-14	••SKIN - STARBOARD WOP INBOARD LOWER INNER	211-	
-19	NAS222-11	••SCREW - (UPPER & LOWER SKIN)		11
	NAS222-12	••SCREW - (UPPER & LOWER SKIN)		31
	AN960D416	••WASHER - (UPPER & LOWER SKIN)		22
	AN365-428	••NUT - (UPPER & LOWER SKIN)		42
-20	NAS221-11	••SCREW - (UPPER & LOWER SKIN)		12
	AN960D10	••WASHER - (UPPER & LOWER SKIN)		12
	AN365-1032	••NUT - (UPPER & LOWER SKIN)		12
-21	AN509-10-9	••SCREW - (UPPER & LOWER SKIN)		10
	AN960D10	••WASHER - (UPPER & LOWER SKIN)		10
	AN365-1032	••NUT - (UPPER & LOWER SKIN)		10
-22	AN509-416R18	•SCREW - (LOWER SKIN ATTACHING)		1
	AN960-416	•WASHER -		1
	AN365-428	•NUT -		1
-23	AN509-416R16	•SCREW - (LOWER SKIN ATTACHING)		
	AN509-10R12	•SCREW - (LOWER SKIN ATTACHING)		11
	AN509-10R14	•SCREW - (LOWER SKIN ATTACHING)		9
	AN509-10R10	•SCREW - (LOWER SKIN ATTACHING)	A4	31
	AN50910R10	•SCREW - (LOWER SKIN ATTACHING) (AS PER EO 05-5E-6B/9)	371-610	25
	AN509-10R17	•SCREW - (LOWER SKIN ATTACHING)		4
	AN509-416R13	•SCREW - (LOWER SKIN ATTACHING)		14
	AN960-10	•WASHER -		17
	AN960D10	•WASHER -	A4	39
	AN960D10	•WASHER - (AS PER EO 05-5E-6B/9)	371-610	33
	AN960C416	•WASHER -		13
	AN364-1032	•NUT -		2
	AN365-1032	•NUT -	A4	54
	AN365-1032	•NUT - (AS PER EO 05-5E-6B/9)	371-610	48

FIGURE AND INDEX NUMBER	GROUP WING MAJOR ASSEMBLY OUTER WING PANEL LOWER SKINS PART NUMBER	1234567 NOMENCLATURE	CODE	UNITS PER ASSY
13 -	AN365-428	•NUT -		13
-24	AN3-6A	•BOLT - (LOWER SKIN ATTACHING)		4
	AN960-10L	•WASHER -		4
	AN365-1032	•NUT -		4
-25	170-14025-21	•SKIN ASSY - PORT WING OUTER PANEL FLAP STA 95 TO TIP TRAILING EDGE LOWER		1
	170-14025-22	•SKIN ASSY - STBD WING OUTER PANEL FLAP STA 95 TO TIP TRAILING EDGE LOWER		1
	170-14025-3	••SKIN - PORT WING OUTER PANEL FLAP STA 95 TO TIP TRAILING EDGE LOWER		1
	170-14025-4	••SKIN - STBD WING OUTER PANEL FLAP STA 95 TO TIP TRAILING EDGE LOWER		1
-26	170-14234-1	••TRAILING EDGE - PORT WING O/PNL AILERON STA 0-114 LOWER		1
	170-14234-2	••TRAILING EDGE - STARBOARD WOP AILERON STA 0-114 LOWER		1
-27	165-14393-3	••HINGE - PORT WOP LOWER DOOR FLAP STA 96 TO AILERON STA 114 OUTER (MAKE FROM 6E286 X 55-3/16 (NAA))		1
	165-14393-4	••HINGE - STARBOARD WOP LOWER DOOR FLAP STA 96 TO AILERON STA 114 OUTER (MAKE FROM 6E286 X 55-3/16 (NAA))		1
	165-14393-5	••HINGE - PORT WOP LOWER DOOR FLAP STA 96 TO AILERON STA 114 OUTER (MAKE FROM 6E286 X 55-3/16 (NAA))		1
	165-14393-6	••HINGE - STARBOARD WOP LOWER DOOR FLAP STA 96 TO AILERON STA 114 OUTER (MAKE FROM 6E286 X 55-3/16 (NAA))		1
	165-14393-11	••HINGE - PORT WOP LOWER DOOR FLAP STA 96 TO AILERON STA 114 INNER (MAKE FROM 6E286 X 47-3/4 (NAA))		1
	165-14393-12	••HINGE - STARBOARD WOP LOWER DOOR FLAP STA 96 TO AILERON STA 114 INNER (MAKE FROM 6E286 X 47-3/4 (NAA))		1
	165-14393-13	••HINGE - PORT WOP LOWER DOOR FLAP STA 96 TO AILERON STA 114 INNER (MAKE FROM 6E286 X 47-3/4 (NAA))		1
	165-14393-14	••HINGE - STARBOARD WOP LOWER DOOR FLAP STA 96 TO AILERON STA 114 INNER (MAKE FROM 6E286 X 47-3/4 (NAA))		1
-28	2P7-9-46-5/8	••HINGE-PIN ASSY - (NAA)		1
	2P7-9-54	••HINGE-PIN ASSY - (NAA)		1
	170-14025-7	••COVER-PLATE - HINGE-PIN END		1
	7S15C-10-7	••SCREW - 100-DEG FLUSH HEAD (NAA) (COVER-PLATE ATTACHING)		2
	AN363C1032	••NUT -		2
	165-14394-41	••SEAL ASSY - PORT WOP LOWER DOOR INNER HINGE FLAP STA 96 TO AILERON STA 114		1
	165-14394-42	••SEAL ASSY - STBD WOP LOWER DOOR INNER HINGE FLAP STA 96 TO AILERON STA 114		1
-29	165-14394-1	••SEAL ASSY - PORT WOP LOWER DOOR INNER HINGE FLAP STA 96 TO AILERON STA 114		1
	165-14394-2	••SEAL ASSY - STARBOARD WOP LWR DOOR INNER HINGE FLAP STA 96 TO AILERON STA 114		1
	NAS221-10	•SCREW - (TRAILING EDGE LOWER SKIN ATT)		2
	7S14CN1032-10A	•SCREW - CORROSION-RESISTANT RD/HD (NAA) (TRAILING EDGE LOWER SKIN ATTACHING)		1
	7S14CN1032-10A	•SCREW - CORROSION-RESISTANT RD/HD (NAA)	001-610	2
	NAS221-10	•SCREW - (TRAILING EDGE LOWER SKIN ATT)	001-610	2
	NAS221-9	•SCREW - (TRAILING EDGE LOWER SKIN ATT)	611-	4
-30	151-14600-11	SKIN - PORT WING O/PNL INBOARD UPPER INNER (SEE FIG. 12)		REF

-000-

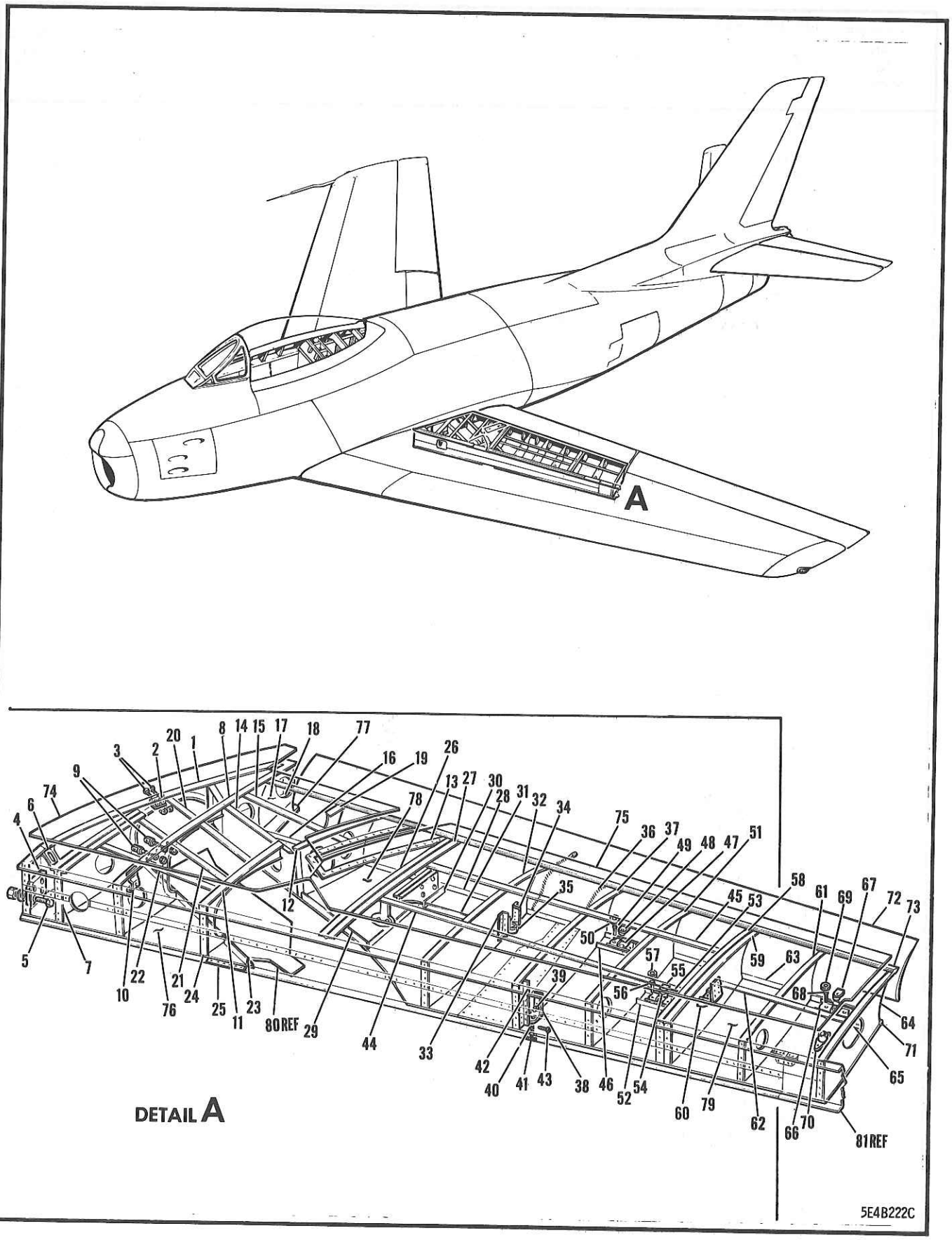

FIGURE 14 OUTER WING INBOARD TRAILING EDGE

FIGURE AND INDEX NUMBER	GROUP WING MAJOR ASSEMBLY OUTER WING INBOARD TRAILING EDGE PART NUMBER	1234567 NOMENCLATURE	CODE	UNITS PER ASSY
14 -	170-14006-201	TRAILING EDGE ASSY - PORT WOP INBOARD (SEE FIG. 8)	001-040	1
	170-14006-801	TRAILING EDGE ASSY - PORT WOP INBOARD	041-	1
	170-14006-202	TRAILING EDGE ASSY - STARBOARD WOP INBOARD (SEE FIG. 8)	001-040	1
	170-14006-802	TRAILING EDGE ASSY - STARBOARD WOP INBOARD	041-	1
	165-14066-51	•RIB ASSY - PORT WING TRAILING EDGE BP 29		1
	165-14066-52	•RIB ASSY - STBD WING TRAILING EDGE BP 29		1
- 1	165-14066-3	••WEB - PORT WING TRAILING EDGE BP 29		1
	165-14066-4	••WEB - STBD WING TRAILING EDGE BP 29		1
	165-14066-15	••ANGLE - PORT WING TRAILING EDGE BP 29 RIB (MAKE FROM 1E48 X 5-7/8 (NAA))		1
	165-14066-16	••ANGLE - STBD WING TRAILING EDGE BP 29 RIB (MAKE FROM 1E48 X 5-7/8 (NAA))		1
- 2	165-14066-23	••CLIP - WING TRAILING EDGE BP 29 RIB		1
- 3	AN3-4A	••BOLT - (CLIP ATTACHING)		2
	AN960D10	••WASHER -		2
	AN365-1032	••NUT -		2
- 4	172-14742-1	••BLOCK - PORT WOP BP 29 TRAILING EDGE RIB TO REAR SPAR COMPRESSION		1
	172-14742-2	••BLOCK - STARBOARD WOP BP 29 TRAILING EDGE RIB TO REAR SPAR COMPRESSION		1
- 5	AN3-6A	••BOLT - (BLOCK ATTACHING)		1
	AN3-5A	••BOLT - (BLOCK ATTACHING)		2
	AN960D10L	••WASHER -		3
	AN365-1032	••NUT -		3
- 6	151-14091-1	•DOUBLER ASSY - PORT WOP TRAILING EDGE BP 29 RIB FILLET ATTACHING		1
	151-14091-2	•DOUBLER ASSY - STARBOARD WOP TRAILING EDGE BP 29 RIB FILLET ATTACHING		1
- 7	151-14067-1	•RIB ASSY - PORT WOP TRAILING EDGE STA 63		1
	151-14067-2	•RIB ASSY - STARBOARD WING O/PNL TE STA 63		1
	295134-20B	••GROMMET - (MKM) (PLASTIC)	001-300	1
	295134-24B	••GROMMET - (MKM) (PLASTIC)	301-	1
	140-48092	••FAIRLEAD - O/W FUEL CELL REAR VENT LINE (PORT WING)		1
	165-14068-1	•RIB ASSY - PORT WOP TRAILING EDGE STA 72		1
	165-14068-2	•RIB ASSY - STARBOARD WOP TE STA 72		1
- 8	165-14068-3	••WEB - PORT WOP TRAILING EDGE STA 72		1
	165-14068-4	••WEB - STARBOARD WOP TRAILING EDGE STA 72		1
- 9	AN42-4A	••EYE-BOLT - (MAIN GEAR UPLOCK SYSTEM SPRING ATTACHING)		2
	AN960-10L	••WASHER -		2
	AN365-1032	••NUT -		2
-10	151-54270-1	••CLIP ASSY - M/LDG/GR UPLOCK SEQ SWITCH LH		1
	151-54270-2	••CLIP ASSY - M/LDG/GR UPLOCK SEQ SWITCH RH		1
	22A5-02	•••NUT - CORNER ANCHOR (ESN)		1
	165-14068-5	••ANGLE - PORT WOP TRAILING EDGE STA 72 RIB		1
	165-14068-6	••ANGLE - STBD WOP TRAILING EDGE STA 72 RIB		1
	170-14006-89	•SHIM - WING O/PNL TRAILING EDGE (STA 6)		2
-11	140-14069-1	•RIB ASSY - PORT WING TE FLAP STA 16		1
	140-14069-2	•RIB ASSY - STARBOARD WING TE FLAP STA 16		1
	140-14069-3	••RIB - PORT WING TRAILING EDGE FLAP STA 16		1
	140-14069-4	••RIB - STBD WING TRAILING EDGE FLAP STA 16		1
	140-14069-5	••CLIP - PORT WING TE FLAP STA 16 RIB		1
	140-14069-6	••CLIP - STARBOARD WING TE FLAP STA 16 RIB		1
	295202-16B	••GROMMET - (MKM) (PLASTIC)		1
-12	165-14075-1	•RIB ASSY - PORT WING OUTER PANEL TRAILING EDGE FLAP STA 22 CANTED		1
	165-14075-2	•RIB ASSY - STARBOARD WING OUTER PANEL TRAILING EDGE FLAP STA 22 CANTED		1

FIGURE AND INDEX NUMBER	GROUP WING MAJOR ASSEMBLY OUTER WING INBOARD TRAILING EDGE PART NUMBER	1234567 NOMENCLATURE	CODE	UNITS PER ASSY
14 -	22A1-40	••NUT - TWO-LUG ANCHOR (ESN)		2
-13	170-14006-45	•DOUBLER ASSY - PORT WOP TE FLAP STA 31 (TRUNNION ACCESS DOOR)		1
	170-14006-46	•DOUBLER ASSY - STBD WOP TE FLAP STA 31 (TRUNNION ACCESS DOOR)		1
	9C1-3-6	•SAFETY-CHAIN - (TRUNNION ACCESS DOOR)(NAA)		1
	22A217-02	•NUT - FLOATING ONE-LUG ANCHOR (ESN) (TRUNNION ACCESS DOOR)		2
	22A21-2-02	•NUT - FLOATING TWO-LUG ANCHOR (ESN) (TRUNNION ACCESS DOOR)		13
-14	151-14065-51	•BEAM ASSY - PORT WOP STA 90 TO BP 29 FALSE		1
	151-14065-52	•BEAM ASSY - STBD WOP STA 90 TO BP 29 FALSE		1
	151-14065-39	••WEB - PORT WOP STA 90 TO BP 29 FALSE		1
	151-14065-40	••WEB - STBD WOP STA 90 TO BP 29 FALSE		1
	A5980-8Z-3	••BRACKET ASSY - ANGLE (TIN)		1
	151-14065-35	••ANGLE - PORT WOP STA 90 TO BP 29 FALSE (MAKE FROM 10134-0702 X 7-1/4 (ALU))		1
	151-14065-36	••ANGLE - STBD WOP STA 90 TO BP 29 FALSE (MAKE FROM 10134-0702 X 7-1/4 (ALU))		1
	151-14065-37	••ANGLE - PORT WOP STA 90 TO BP 29 FALSE (MAKE FROM 10134-0702 X 7 (ALU))		1
	151-14065-38	••ANGLE - STBD WOP STA 90 TO BP 29 FALSE (MAKE FROM 10134-0702 X 7 (ALU))		1
	151-14065-41	••ANGLE - PORT WOP STA 90 TO BP 29 FALSE (MAKE FROM 10134-1204 X 29-1/2(ALU))		1
	151-14065-42	••ANGLE - STBD WOP STA 90 TO BP 29 FALSE (MAKE FROM 10134-1204 X 29-1/2(ALU))		1
-15	170-14006-117	•ANGLE - PORT WOP TRAILING EDGE FLAP STA 5 (MAKE FROM 1E100 X 17 (NAA))		1
	170-14006-118	•ANGLE - STBD WOP TRAILING EDGE FLAP STA 5 (MAKE FROM 1E100 X 17 (NAA))		1
-16	170-14006-23	•ANGLE - PORT WOP TE FLAP STA 5 TO 32 (MAKE FROM ALCOA 2885 X 24-1/2 (ALU))		1
	170-14006-24	•ANGLE - STBD WOP TE FLAP STA 5-32 (MAKE FROM ALCOA 22885 X 24-1/2 (ALU))		1
	151-14186	•SPLICE ASSY - WING O/PNL LOWER TRAILING EDGE (FLAP STA 33 & 77)		2
	170-14006-105	•ANGLE - PORT WOP INBOARD TE (STA 6-11)		1
	170-14006-106	•ANGLE - STBD WOP INBOARD TE (STA 6-11)		1
	170-14006-63	•ANGLE - PORT WOP TE FLAP STA 5 (MAKE FROM 1E101 X 6-9/16 (NAA))		1
	170-14006-64	•ANGLE - STARBOARD WOP TE FLAP STA 5 (MAKE FROM 1E101 X 6-9/16 (NAA))		1
-17	165-14034-3	•FORMER - PORT WOP FLAP SHROUD STA 9		1
-18	165-14034-5	•FORMER - PORT WOP FLAP SHROUD STA 9		1
	165-14035	•FORMER ASSY - STBD WOP FLAP SHROUD STA 11		1
	165-14035-3	••FORMER - STARBOARD WOP FLAP SHROUD STA 11		1
	165-14035-5	••ANGLE - STARBOARD WING OUTER PANEL FLAP SHROUD STA 11 FORMER		1
-19	165-14036-2	•FORMER ASSY - WING OUTER PANEL FLAP SHROUD STA 17 RH (PORT WING)		1
	165-14036-1	•FORMER ASSY - WING OUTER PANEL FLAP SHROUD STA 17 LH (STARBOARD WING)		1
	165-14036-4	••FORMER - WING OUTER PANEL FLAP SHROUD STA 17 RH (PORT WING)		1
	165-14036-3	••FORMER - WING OUTER PANEL FLAP SHROUD STA 17 LH (STARBOARD WING)		1
	165-14036-6	••STIFFENER - WING OUTER PANEL FLAP SHROUD STA 17 RH (PORT WING)		1
	165-14036-5	••STIFFENER - WING OUTER PANEL FLAP SHROUD STA 17 LH (STARBOARD WING)		1

FIGURE AND INDEX NUMBER	GROUP WING MAJOR ASSEMBLY OUTER WING INBOARD TRAILING EDGE PART NUMBER	1234567 NOMENCLATURE	CODE	UNITS PER ASSY
14 -20	170-14006-123	•ANGLE - PORT WOP STA 66 TE TO FLAP STA 16 (MAKE FROM 1E128 X 7-1/4 (NAA))		1
	170-14006-124	•ANGLE - STBD WOP STA 66 TE TO FLAP STA 16 (MAKE FROM 1E128 X 7-1/4 (NAA))		1
-21	170-14006-19	•STRINGER - PORT WING OUTER PANEL STA 67 TRAILING EDGE TO FLAP STA 16 (MAKE FROM 1E128 X 16-1/4 (NAA))		1
	170-14006-20	•STRINGER - STBD WING OUTER PANEL STA 67 TRAILING EDGE TO FLAP STA 16 (MAKE FROM 1E128 X 16-1/4 (NAA))		1
-22	170-14006-101	•ANGLE - PORT WOP STA 64 TE TO FLAP STA 16 (MAKE FROM 1E128 X 18-7/8 (NAA))		1
	170-14006-102	•ANGLE - STBD WOP STA 64 TE TO FLAP STA 16 (MAKE FROM 1E128 X 18-7/8 (NAA))		1
-23	170-14006-57	•ANGLE - PORT WOP TE STA 65-89 (MAKE FROM ALCOA 10134-1204 X 32 (ALU))		1
	170-14006-58	•ANGLE - STARBOARD WOP TE STA 65-89 (MAKE FROM ALCOA 10134-1204 X 32 (ALU))		1
-24	165-14494-1	•STRIP - PORT WOP LDG/GR ANGLE REINFORCING		1
	165-14494-2	•STRIP - STARBOARD WOP LDG/GR ANGLE REINF		1
	165-14493-3	•STRIP - WOP LANDING GEAR ANGLE REINFORCING		1
-25	140-14154-1	•GUSSET ASSY - PORT WOP TRAILING EDGE BEAM TO SPAR ATTACHING		1
	140-14154-2	•GUSSET ASSY - STARBOARD WOP TRAILING EDGE BEAM TO SPAR ATTACHING		1
-26	151-14635-1	•ANGLE ASSY - PORT WOP TE FLAP STA 33		1
	151-14635-2	•ANGLE ASSY - STARBOARD WOP TE FLAP STA 33		1
-27	151-14634-1	•ANGLE ASSY - PORT WOP TE FLAP STA 34		1
	151-14634-2	•ANGLE ASSY - STARBOARD WOP TE FLAP STA 34		1
-28	170-14006-25	•ANGLE - PORT WOP TE FLAP STA 33-76 (MAKE FROM 22885 X 42 (ALU))		1
	170-14006-26	•ANGLE - STARBOARD WOP TE FLAP STA 33-76 (MAKE FROM 22885 X 42 (ALU))		1
-29	151-14633-11	•RIB ASSY - PORT WING O/PNL TE FLAP STA 33		1
	151-14633-12	•RIB ASSY - STBD WING O/PNL TE FLAP STA 33		1
-30	151-14633-1	•RIB ASSY - PORT WOP TE FLAP STA 34		1
	151-14633-2	•RIB ASSY - STARBOARD WOP TE FLAP STA 34		1
-31	170-14006-69	•STIFFENER - PORT WOP TE FLAP STA 33-47 (MAKE FROM 78K X 13-1/4 (ALU))		1
	170-14006-70	•STIFFENER - STBD WOP TE FLAP STA 33-47 (MAKE FROM 78K X 13-1/4 (ALU))		1
	170-14570-1	•RIB ASSY - PORT WOP FLAP STA 47 SHROUD	001-200	1
	170-14570-11	•RIB ASSY - PORT WOP FLAP STA 47 SHROUD	201-	1
	170-14570-2	•RIB ASSY - STBD WOP FLAP STA 47 SHROUD	001-200	1
	170-14570-12	•RIB ASSY - STBD WOP FLAP STA 47 SHROUD	201-	1
-32	170-14570-3	••RIB - PORT WOP FLAP STA 47 SHROUD	001-200	1
	170-14570-13	••RIB - PORT WOP FLAP STA 47 SHROUD	201-	1
	170-14570-4	••RIB - STARBOARD WOP FLAP STA 47 SHROUD	001-200	1
	170-14570-14	••RIB - STARBOARD WOP FLAP STA 47 SHROUD	201-	1
-33	170-14570-5	••ANGLE - PORT WOP REAR ROCKET ATT FITTING (MAKE FROM 10134-0702 X 7-1/2 (ALU))		1
	170-14570-6	••ANGLE - STBD WOP REAR ROCKET ATT FITTING (MAKE FROM 10134-0702 X 7-1/2 (ALU))		1
-34	170-14570-7	••ANGLE - PORT WOP REAR ROCKET ATT FITTING (MAKE FROM 10134-0702 X 7 (ALU))		1
	170-14570-8	••ANGLE - STBD WOP REAR ROCKET ATT FITTING (MAKE FROM 10134-0702 X 7 (ALU))		1
	151-14576-1	••FITTING ASSY - PORT WOP REAR ROCKET ATTACHING WING STA 116		1

FIGURE AND INDEX NUMBER	GROUP WING MAJOR ASSEMBLY OUTER WING INBOARD TRAILING EDGE PART NUMBER	1234567 NOMENCLATURE	CODE	UNITS PER ASSY
14 -	151-14576-2	••FITTING ASSY - STARBOARD WOP REAR ROCKET ATTACHING WING STA 116		1
-35	151-14576-3	•••FITTING - PORT WOP REAR ROCKET ATTACHING (MAKE FROM 2E80 X 1-3/8 (NAA))		1
	151-14576-4	•••FITTING - STARBOARD WOP REAR ROCKET ATT (MAKE FROM 2E80 X 1-3/8 (NAA))		1
	140-14181	•••BUSHING - WOP ROCKET REAR SUPPORT		1
	R104SH-5	•••INSERT - LOCKED-IN (ROS)		2
	RL21SB-6	•••LOCK-RING - STANDARD (ROS)		2
-36	6043-3-6-8	•JUMPER - (JNI) (BONDING)		1
	6043-3-6-7	•JUMPER - (JNI) (BONDING)		1
	AN520-10R6	•SCREW - (JUMPER ATTACHING)		2
	AN960D10	•WASHER -		2
	AN365-1032	•NUT -		2
	170-14571-1	•RIB ASSY - PORT WOP FLAP STA 56 SHROUD		1
	170-14571-2	•RIB ASSY - STARBOARD WING OUTER PANEL STA 56 SHROUD		1
-37	170-14571-3	••RIB - PORT WOP FLAP STA 56 SHROUD		1
	170-14571-4	••RIB - STBD WOP FLAP STA 56 SHROUD		1
	151-14577-1	••FITTING ASSY - PORT WOP REAR ROCKET ATTACHING WING STA 124		1
	151-14577-2	••FITTING ASSY - STARBOARD WOP REAR ROCKET ATTACHING WING STA 124		1
-38	151-14577-3	•••FITTING - PORT WOP REAR ROCKET ATTACHING STA 124(MAKE FROM 2E80 X 1-1/2(NAA))		1
	151-14577-4	•••FITTING - STARBOARD WOP REAR ROCKET ATT STA 124(MAKE FROM 2E80 X 1-1/2(NAA))		1
-39	140-14181	•••BUSHING - WOP ROCKET REAR SUPPORT		1
-40	R104SH-5	•••INSERT - LOCKED-IN (ROS)		2
-41	R21SB-6	•••LOCK-RING - STANDARD (ROS)		2
-42	170-14571-5	••ANGLE - PORT WOP REAR ROCKET ATT FITTING (MAKE FROM 10133-1201 X 2-5/8 (ALU))		1
	170-14571-6	••ANGLE - STARBOARD WOP REAR ROCKET ATT FTG (MAKE FROM 10133-1201 X 2-5/8 (ALU))		1
	170-14571-7	••ANGLE - PORT WOP REAR ROCKET ATT FITTING (MAKE FROM 10134-1204 X 7-1/16(ALU))		1
	170-14571-8	••ANGLE - STARBOARD WOP REAR ROCKET ATT FTG (MAKE FROM 10134-1204 X 7-1/16(ALU))		1
-43	NAS221-10	••SCREW -		2
	AN960D10	••WASHER -		2
	AN365-1032	••NUT -		2
-44	170-14006-17	•STRINGER - PORT WOP TE WING STA 100-143 (MAKE FROM 1E128 X 40-3/4 (NAA))		1
	170-14006-18	•STRINGER - STBD WOP TE WING STA 100-143 (MAKE FROM 1E128 X 40-3/4 (NAA))		1
-45	170-14006-15	•STRINGER - PORT WOP TE WING STA 100-143 (MAKE FROM 1E128 X 40-3/4 (NAA))		1
	170-14006-16	•STRINGER - STBD WING TE WING STA 100-143 (MAKE FROM 1E128 X 40-3/4 (NAA))		1
-46	170-14006-29	•STRINGER - PORT WOP TE FLAP STA 56-66 (MAKE FROM 78K X 9-15/16 (ALU))		1
	170-14006-30	•STRINGER - STBD WOP TE FLAP STA 56-66 (MAKE FROM ALCOA 78 X 9-15/16 (ALU))		1
	152-14176-1	•FITTING ASSY - PORT WOP REAR ROCKET SUPPORT ATTACHING		1
	152-14176-2	•FITTING ASSY - STARBOARD WOP REAR ROCKET SUPPORT ATTACHING		1
-47	152-14176-3	••FITTING - PORT WOP REAR ROCKET SUPPORT (MAKE FROM 6E193 X 29/32 (NAA))		1
	152-14176-4	••FITTING - STARBOARD WOP REAR ROCKET SUP. (MAKE FROM 6E193 X 29/32 (NAA))		1

FIGURE AND INDEX NUMBER	GROUP WING MAJOR ASSEMBLY OUTER WING INBOARD TRAILING EDGE		CODE	UNITS PER ASSY
	PART NUMBER	1234567 NOMENCLATURE		
14 -48	140-14181	••BUSHING - WOP ROCKET REAR SUPPORT		1
-49	R104SH-5	••INSERT - LOCKED-IN (ROS)		2
-50	RL21SB-6	••LOCK-RING - STANDARD (ROS)		2
-51	140-14072-11	•RIB ASSY - PORT WING OUTER PANEL FLAP SHROUD FLAP STA 66		1
	140-14072-12	•RIB ASSY - STARBOARD WING OUTER PANEL FLAP SHROUD FLAP STA 66		1
-52	170-14006-33	•STRINGER - PORT WOP TE WING STA 143 TO FLAP STA 66(MAKE FROM 78K X 10(ALU))		1
	170-14006-34	•STRINGER - STBD WOP TE WING STA 143 TO FLAP STA 66(MAKE FROM 78K X 10(ALU))		1
-53	170-14006-35	•STRINGER - PORT WOP TE WING STA 143 TO FLAP STA 66(MAKE FROM 78K X 10(ALU))		1
	170-14006-36	•STRINGER - STBD WOP TE WING STA 143 TO FLAP STA 66(MAKE FROM 78K X 10(ALU))		1
	152-14176-1	•FITTING ASSY - PORT WOP REAR ROCKET SUPPORT ATTACHING		1
	152-14176-2	•FITTING ASSY - STARBOARD WOP REAR ROCKET SUPPORT ATTACHING		1
-54	152-14176-3	••FITTING - PORT WOP REAR ROCKET SUPPORT (MAKE FROM 6E193 X 29/32 (NAA))		1
	152-14176-4	••FITTING - STARBOARD WOP REAR ROCKET SUP• (MAKE FROM 6E193 X 29/32 (NAA))		1
-55	140-14181	••BUSHING - WOP ROCKET REAR SUPPORT		1
-56	R104SH-5	••INSERT - LOCKED-IN (ROS)		2
-57	RL21SB-6	••LOCK-RING - STANDARD (ROS)		2
-58	151-14675-1	•RIB ASSY - PORT WING TE FLAP STA 76		1
	151-14675-2	•RIB ASSY - STARBOARD WING TE FLAP STA 76		1
-59	151-14676-1	•RIB ASSY - PORT WING TE FLAP STA 77		1
	151-14676-2	•RIB ASSY - STARBOARD WING TE FLAP STA 77		1
	151-14578-1	•FITTING ASSY - PORT WOP REAR ROCKET STA 142 ATTACHING		1
	151-14578-2	•FITTING ASSY - STARBOARD WOP REAR ROCKET STA 142 ATTACHING		1
-60	151-14578-3	••FITTING - PORT WOP REAR ROCKET ATTACHING (MAKE FROM 1E190 X 2 (NAA))		1
	151-14578-4	••FITTING - STBD WOP REAR ROCKET ATTACHING (MAKE FROM 1E190 X 2 (NAA))		1
	140-14181	••BUSHING - WOP ROCKET REAR SUPPORT		1
	R104SH-5	••INSERT - LOCKED-IN (ROS)		2
	RL21SB-6	••LOCK-RING - STANDARD (ROS)		2
	2R3-6-5	•PIN - FLAT-HEAD HI-SHEAR RIVET (NAA)		2
	2R3-6-6	•PIN - FLAT-HEAD HI-SHEAR RIVET (NAA)		2
	2R4-6	•COLLAR - HI-SHEAR RIVET (NAA)		4
-61	140-14073-11	•RIB ASSY - PORT WOP SHROUD FLAP STA 86		1
	140-14073-12	•RIB ASSY - STBD WOP SHROUD FLAP STA 86		1
-62	170-14006-13	•STRINGER - PORT WOP TE WING STA 145-165 (MAKE FROM 1E128 X 17-3/4 (NAA))		1
	170-14006-14	•STRINGER - STBD WOP TE WING STA 145-165 (MAKE FROM 1E128 X 17-3/4 (NAA))		1
-63	170-14006-27	•ANGLE - PORT WOP TE FLAP STA 76-95 (MAKE FROM 22885 X 19-1/2 (ALU))		1
	170-14006-28	•ANGLE - STARBOARD WOP TE FLAP STA 76-95 (MAKE FROM 22885 X 19-1/2 (ALU))		1
-64	151-14074-11	•RIB ASSY - PORT WOP SHROUD FLAP STA 96		1
	151-14074-12	•RIB ASSY - STBD WOP SHROUD FLAP STA 96		1
	151-14074-13	••WEB - PORT WOP FLAP SHROUD FLAP STA 96		1
	151-14074-14	••WEB - STBD WOP FLAP SHROUD FLAP STA 96		1
	151-14074-5	••CLIP - PORT WOP FLAP SHROUD REINFORCING (MAKE FROM 22257 X 3 (ALU))		1

FIGURE AND INDEX NUMBER	GROUP WING MAJOR ASSEMBLY OUTER WING INBOARD TRAILING EDGE PART NUMBER	1234567 NOMENCLATURE	CODE	UNITS PER ASSY
14 -	151-14074-6	••CLIP - STBD WOP FLAP SHROUD REINFORCING (MAKE FROM 22257 X 3 (ALU))		1
	151-14074-951	••ANGLE - PORT WOP FLAP SHROUD REINFORCING		AR
	151-14074-952	••ANGLE - STBD WOP FLAP SHROUD REINFORCING		AR
-65	170-14006-93	•ANGLE - PORT WOP TE FLAP STA 86-95 (MAKE FROM 78K X 9-5/8 (ALU))		1
	170-14006-94	•ANGLE - STARBOARD WOP TE FLAP STA 86-95 (MAKE FROM 78K X 9-5/8 (ALU))		1
	152-14176-1	•FITTING ASSY - PORT WOP REAR ROCKET SUPPORT ATTACHING		1
	152-14176-2	•FITTING ASSY - STARBOARD WOP REAR ROCKET SUPPORT ATTACHING		1
-66	152-14176-3	••FITTING - PORT WOP REAR ROCKET SUPPORT (MAKE FROM 6E193 X 29/32 (NAA))		1
	152-14176-4	••FITTING - STARBOARD WOP REAR ROCKET SUP. (MAKE FROM 6E193 X 29/32 (NAA))		1
-67	140-14181	••BUSHING - WOP ROCKET REAR SUPPORT		1
-68	R104SH-5	••INSERT - LOCKED-IN (ROS)		2
-69	RL21SB-6	••LOCK-RING - STANDARD (ROS)		2
-70	2J1	•JACK ASSY - FUEL NOZ GRD (NAA) (PORT WING)	001-212	3
	2J1	•JACK ASSY - FUEL NOZ GRD (NAA) (PORT WING)	213-	2
	2J1	•JACK ASSY - FUEL NOZ GRD (NAA) (STBD WING)	001-212	2
	2J1	•JACK ASSY - FUEL NOZ GRD (NAA) (STBD WING)	213-	1
	170-14006-21	•SEAL ASSY - PORT WOP TRAILING EDGE INBOARD		1
	170-14006-22	•SEAL ASSY - STARBOARD WOP TE INBOARD		1
-71	151-14256-31	••SEAL ASSY - FLAP TO SHROUD LOWER SURFACE (OUTBOARD)		1
	151-14256-11	••SEAL ASSY - FLAP TO SHROUD LOWER SURFACE (INTERMEDIATE)		1
	151-14256-1	••SEAL ASSY - FLAP TO SHROUD LOWER SURFACE (INBOARD)		1
-72	170-14006-49	•SKIN - PORT WOP TE SHROUD INBOARD		1
	170-14006-50	•SKIN - STARBOARD WOP TE SHROUD INBOARD		1
-73	151-14152	•TRAILING EDGE - WOP INBOARD UPPER		1
	170-14234-3	•TRAILING EDGE - PORT WING AILERON STA 0-114 LOWER		1
	170-14234-4	•TRAILING EDGE - STARBOARD WOP AILERON STA 0-114 LOWER		1
-74	170-14006-141	•SKIN - PORT WOP TRAILING EDGE UPPER INBD	001-040	1
	170-14006-951	•SKIN - PORT WOP TRAILING EDGE UPPER INBD OR	041-	1
	L170-14006-141	•SKIN - PORT WOP TRAILING EDGE UPPER INBD	041-	
	170-14006-142	•SKIN - STARBOARD WOP TE UPPER INBOARD	001-040	1
	170-14006-952	•SKIN - STARBOARD WOP TE UPPER INBOARD OR	041-	1
	L170-14006-142	•SKIN - STARBOARD WOP TE UPPER INBOARD	041-	
-75	170-14006-3	•SKIN - PORT WOP TRAILING EDGE UPPER OUTBD		1
	170-14006-4	•SKIN - STARBOARD WOP TE UPPER OUTBOARD		1
-76	170-14006-7	•SKIN - PORT WOP TRAILING EDGE LOWER INBD		1
	170-14006-8	•SKIN - STARBOARD WOP TE LOWER INBOARD		1
-77	170-14006-9	•SKIN - PORT WOP TRAILING EDGE LOWER INBD		1
	170-14006-10	•SKIN - STARBOARD WOP TE LOWER INBOARD		1
-78	170-14006-39	•SKIN - PORT WOP TRAILING EDGE LOWER INTER		1
	170-14006-40	•SKIN - STARBOARD WOP TE LOWER INTERMEDIATE		1
-79	170-14006-37	•SKIN - PORT WOP TRAILING EDGE LOWER OUTBD		1
	170-14006-38	•SKIN - STARBOARD WOP TE LOWER OUTBOARD		1
-80	140-33351-1	DOOR ASSY - PORT WING MAIN LDG/GR STRUT (SEE SECTION 4)		REF
-81	170-14005-31	SPAR ASSY - PORT WOP REAR (SEE FIG. 11)		REF

-000-

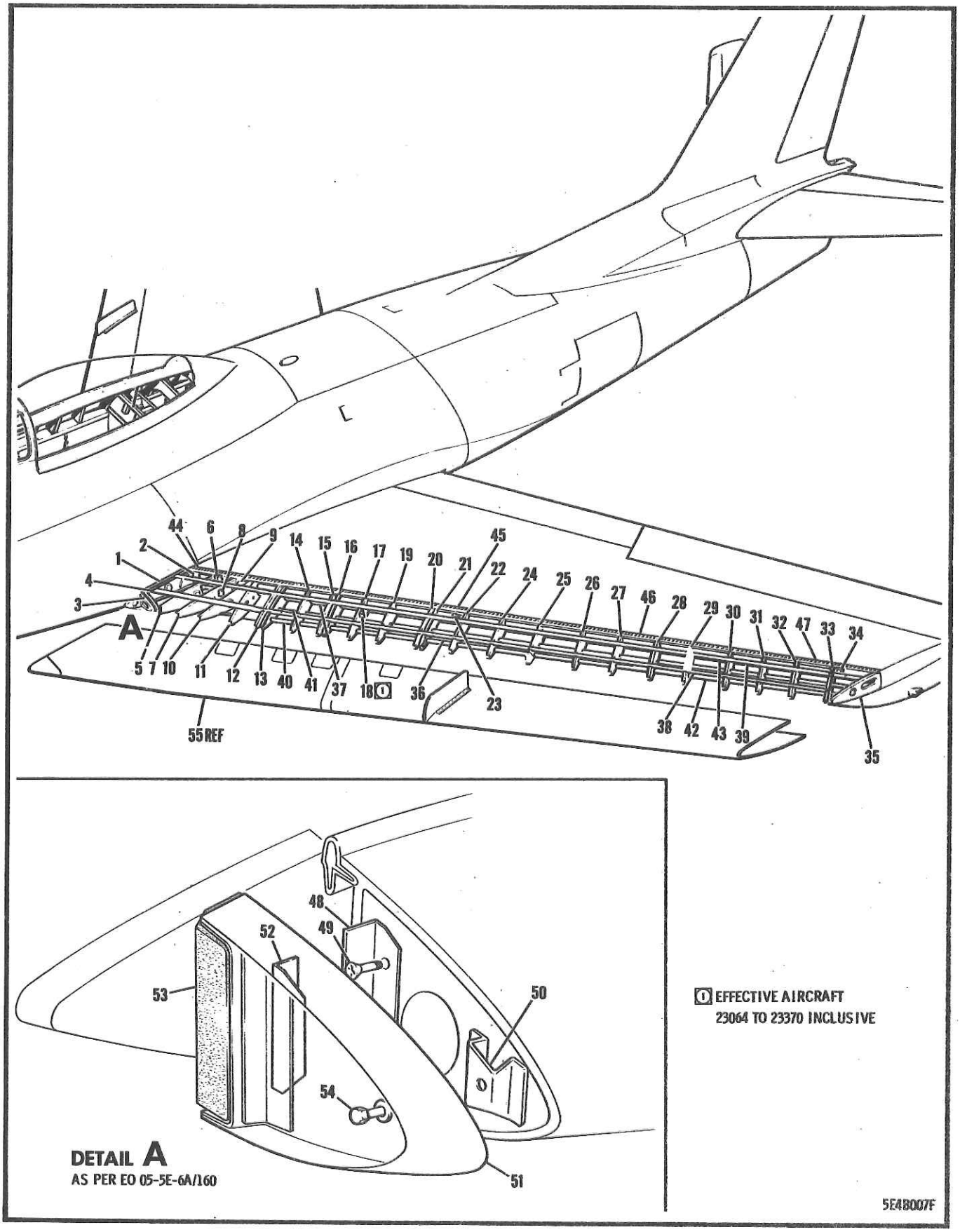

FIGURE 15 OUTER WING EXTENDED LEADING EDGE
(EFFECTIVE AIRCRAFT 23001 TO 23370 INCL)

FIGURE AND INDEX NUMBER	GROUP WING MAJOR ASSEMBLY OUTER WING EXTENDED LEADING EDGE PART NUMBER	1234567 NOMENCLATURE	CODE	UNITS PER ASSY
15 -	172-14711-1	LEADING EDGE ASSY - PORT WOP EXTENDED (SEE FIG. 8)	001-200	1
	172-14711-803	LEADING EDGE ASSY - PORT WOP EXTENDED	201-210	1
	172-14711-805	LEADING EDGE ASSY - PORT WOP EXTENDED (FOR UPPER CODE SEE FIG. 18) (AS PER EO 05-5E-6B/9)	211-370	1
	172-14711-2	LEADING EDGE ASSY - STARBOARD WOP EXTENDED (SEE FIG. 8)	001-200	1
	172-14711-804	LEADING EDGE ASSY - STARBOARD WOP EXTENDED	201-210	1
	172-14711-806	LEADING EDGE ASSY - STARBOARD WOP EXTENDED (FOR UPPER CODE SEE FIG. 18) (AS PER EO 05-5E-6B/9)	211-370	1
- 1	172-14712-3	•RIB ASSY - PORT WOP EXTENDED LE INBOARD CLOSE-OUT CANTED	001-370	1
	172-14712-4	•RIB ASSY - STARBOARD WOP EXTENDED LE INBD CLOSE-OUT CANTED	001-370	1
- 2	165-14339-1	•CLIP - PORT WOP LE CANTED WING STA 46	001-370	1
	165-14339-2	•CLIP - STARBOARD WOP LE CANTED WING STA 46	001-370	1
- 3	172-14712-109	•RIB - PORT WOP EXTN LE WING STA 37-46	001-370	1
	172-14712-110	•RIB - STBD WOP EXTN LE WING STA 37-46	001-370	1
- 4	172-14711-55	•SEAL - WOP EXTENDED LEADING EDGE UPPER	001-370	2
	172-14711-57	•SEAL - WOP EXTENDED LEADING EDGE LOWER	001-370	2
- 5	172-14712-5	•RIB ASSY - PORT WOP EXTENDED LEADING EDGE CANTED WING STA 46	001-370	1
	172-14712-6	•RIB ASSY - STBD WOP EXTENDED LEADING EDGE CANTED WING STA 46	001-370	1
- 6	172-14711-971	•ANGLE - PORT WOP EXTN LE STA 46-56 CV ATT	001-370	1
	172-14711-972	•ANGLE - STBD WOP EXTN LE STA 46-56 CV ATT	001-370	1
	151-14033-3	•CLIP - WOP LEADING EDGE INBOARD WING STA 37 LH (STARBOARD)	001-370	1
	151-14033-4	•CLIP - WOP LEADING EDGE INBOARD WING STA 37 RH (PORT)	001-370	1
	151-14033-3	•CLIP - WOP LE INBOARD WING STA 46 & 56	001-370	2
	172-14712-7	•RIB ASSY - PORT WOP EXTENDED LEADING EDGE WING STA 56 CANTED	001-370	1
	172-14712-8	•RIB ASSY - STARBOARD WOP EXTENDED LE WING STA 56 CANTED	001-370	1
- 7	172-14712-69	••WEB - PORT WING OUTER PANEL EXTENDED LEADING EDGE WING STA 56 CANTED RIB	001-370	1
	172-14712-70	••WEB - STARBOARD WING OUTER PANEL EXTENDED LEADING EDGE WING STA 56 CANTED RIB	001-370	1
- 8	13A-50018	••BRACKET - ELECTRICAL PLUG MOUNTING WING STA 56 CANTED RIB (WING TANK LIQUIDOMETER SUPPORT)	001-370	1
	172-14712-103	••ANGLE - PORT WING OUTER PANEL EXTENDED LEADING EDGE WING STA 56 CANTED RIB	001-370	1
	172-14712-104	••ANGLE - STBD WING OUTER PANEL EXTENDED LEADING EDGE WING STA 56 CANTED RIB	001-370	1
	2C12	•CLIP - (NAA) (PORT WING)	001-370	1
	2C12-1	•CLIP - (NAA) (STARBOARD WING)	001-370	1
- 9	170-14244-11	•STIFFENER - EXTENDED LE WING STA 56	001-370	1
	NAS222-11	•SCREW - (STIFFENER ATTACHING)	001-370	2
	AN960D416	•WASHER -	001-370	2
	AN365-428	•NUT -	001-370	2
-10	172-14712-9	•RIB ASSY - PORT WING EXTENDED LEADING EDGE CANTED WING STA 66	001-370	1
	172-14712-10	•RIB ASSY - STARBOARD WING EXTENDED LEADING EDGE CANTED WING STA 66	001-370	1
-11	172-14712-11	•RIB - PORT WING EXTENDED LE STA 59	001-370	1
	172-14712-12	•RIB - STARBOARD WING EXTENDED LE STA 59	001-370	1

FIGURE AND INDEX NUMBER	GROUP WING MAJOR ASSEMBLY OUTER WING EXTENDED LEADING EDGE PART NUMBER	1234567 NOMENCLATURE	CODE	UNITS PER ASSY
15 -12	172-14712-15	•RIB - PORT WING EXTENDED LE STA 74	001-370	1
	172-14712-16	•RIB - STARBOARD WING EXTENDED LE STA 74	001-370	1
-13	172-14712-17	•RIB - PORT WING EXTENDED LE STA 76	001-370	1
	172-14712-18	•RIB - STARBOARD WING EXTENDED LE STA 76	001-370	1
-14	172-14712-19	•RIB - PORT WING EXTENDED LE STA 86	001-200	1
	172-14712-955	•RIB - PORT WING EXTENDED LE STA 86	201-370	1
	172-14712-20	•RIB - STARBOARD WING EXTENDED LE STA 86	001-200	1
	172-14712-956	•RIB - STARBOARD WING EXTENDED LE STA 86	201-370	1
	151-14240-1	•STIFFENER - EXTENDED LEADING EDGE STA 86	001-370	1
	NAS221-10	•SCREW - (STIFFENER ATTACHING)	001-370	2
	AN960D10	•WASHER -	001-370	2
	AN365-1032	•NUT -	001-370	2
-15	172-14712-21	•RIB ASSY - PORT WING EXTENDED LE STA 96	001-200	1
	172-14712-951	•RIB ASSY - PORT WING EXTENDED LE STA 96	201-370	1
	172-14712-22	•RIB ASSY - STARBOARD WING EXTN LE STA 96	001-200	1
	172-14712-952	•RIB ASSY - STARBOARD WING EXTN LE STA 96	201-370	1
-16	172-14712-23	•RIB ASSY - PORT WING EXTENDED LE STA 99	001-200	1
	172-14712-953	•RIB ASSY - PORT WING EXTENDED LE STA 99	201-370	1
	172-14712-24	•RIB ASSY - STARBOARD WING EXTN LE STA 99	001-200	1
	172-14712-954	•RIB ASSY - STARBOARD WING EXTN LE STA 99	201-370	1
-17	172-14712-25	•RIB ASSY - PORT WING EXTENDED LE STA 109	001-210	1
	172-14712-961	•RIB ASSY - PORT WING EXTENDED LE STA 109	211-370	1
	172-14712-26	•RIB ASSY - STARBOARD WING EXTN LE STA 109	001-210	1
	172-14712-962	•RIB ASSY - STARBOARD WING EXTN LE STA 109	211-370	1
	140-48207	••FAIRLEAD - DROP TANK FUEL LINE WING STA 107	001-370	1
-18	13A-50018	••BRACKET - ELEC PLUG MOUNTING WING STA 108	064-370	1
	151-14240-3	•STIFFENER - EXTENDED LEADING EDGE STA 109	001-370	1
	NAS221-10	•SCREW - (UPPER)	001-370	1
	AN509-10R10	•SCREW - (LOWER)	001-370	1
	AN960D10	•WASHER -	001-370	2
	AN365-1032	•NUT -	001-370	2
-19	172-14712-27	•RIB ASSY - PORT WING EXTENDED LE STA 117	001-210	1
	172-14712-963	•RIB ASSY - PORT WING EXTENDED LE STA 117	211-370	1
	172-14712-28	•RIB ASSY - STARBOARD WING EXTN LE STA 117	001-210	1
	172-14712-964	•RIB ASSY - STARBOARD WING EXTN LE STA 117	211-370	1
	151-14240-11	•STIFFENER - EXTENDED LEADING EDGE STA 119	001-370	1
	NAS221-10	•SCREW -	001-370	2
	AN960D10	•WASHER -	001-370	2
	AN365-1032	•NUT -	001-370	2
-20	172-14712-29	•RIB - PORT WING EXTENDED LE STA 129	001-370	1
	172-14712-30	•RIB - STARBOARD WING EXTENDED LE STA 129	001-370	1
-21	172-14712-31	•RIB ASSY - PORT WING EXTENDED LE STA 131	001-210	1
	172-14712-81	•WEB - PORT WING EXTENDED LE STA 131	211-370	1
	172-14712-32	•RIB ASSY - STARBOARD WING EXTN LE STA 131	001-210	1
	172-14712-82	•WEB - STARBOARD WING EXTENDED LE STA 131	211-370	1
	172-14712-33	•RIB ASSY - PORT WING EXTENDED LE STA 142	001-370	1
	172-14712-34	•RIB ASSY - STARBOARD WING EXTN LE STA 142	001-370	1
-22	172-14712-81	••WEB - PORT WING EXTENDED LE STA 131	001-210	1
	172-14712-82	••WEB - STARBOARD WING EXTENDED LE STA 131	001-210	1
	172-14712-83	••WEB - PORT WING EXTENDED LE STA 142	001-370	1
	172-14712-84	••WEB - STARBOARD WING EXTENDED LE STA 142	001-370	1
	172-14712-97	••CHANNEL - PORT WING EXTN LEADING EDGE RIB	001-210	1
	172-14712-98	••CHANNEL - STARBOARD WING EXTENDED LEADING EDGE RIB STA 142	001-210	1
-23	AN42-4A	••BOLT - (ON 172-14712-33 & -34)	001-210	1
	AN960D10	••WASHER -	001-210	1
	AN365-1032	••NUT -	001-210	1
	151-14240-7	•STIFFENER - EXTENDED LEADING EDGE STA 142	001-370	1
	NAS221-10	•SCREW -	001-370	2

FIGURE AND INDEX NUMBER	GROUP / MAJOR ASSEMBLY / PART NUMBER	WING / OUTER WING EXTENDED LEADING EDGE / 1234567 NOMENCLATURE	CODE	UNITS PER ASSY
15 -	151-14240-5	•STIFFENER - EXTENDED LEADING EDGE STA 174	001-370	1
	NAS221-10	•SCREW -	001-370	2
	AN960D10	•WASHER -	001-370	2
	AN365-1032	•NUT -	001-370	2
-27	172-14712-43	•RIB ASSY - PORT WING EXTENDED LE STA 184	001-370	1
	172-14712-44	•RIB ASSY - STARBOARD WING EXTN LE STA 184	001-370	1
-28	172-14712-47	•RIB - PORT WING EXTENDED LE STA 197	001-370	1
	172-14712-48	•RIB - STARBOARD WING EXTENDED LE STA 197	001-370	1
	170-14424-3	•STIFFENER - EXTENDED LEADING EDGE STA 197	001-370	1
	NAS221-10	•SCREW -	001-370	2
	AN960D10	•WASHER -	001-370	2
	AN365-1032	•NUT -	001-370	2
-29	172-14712-49	•RIB - PORT WING EXTENDED LE STA 208	001-370	1
	172-14712-50	•RIB - STARBOARD WING EXTENDED LE STA 208	001-370	1
-30	172-14712-53	•RIB - PORT WING EXTENDED LE STA 220	001-370	1
	172-14712-54	•RIB - STARBOARD WING EXTENDED LE STA 220	001-370	1
	170-14421-3	•STIFFENER - PORT WING EXTENDED LE STA 220	001-370	1
	170-14421-4	•STIFFENER - STARBOARD WING EXTN LE STA 220	001-370	1
	NAS221-12	•SCREW -	001-370	2
	AN960D10	•WASHER -	001-370	2
	AN365-1032	•NUT -	001-370	2
-31	172-14712-55	•RIB - PORT WING EXTENDED LE STA 229	001-370	1
	172-14712-56	•RIB - STARBOARD WING EXTENDED LE STA 229	001-370	1
	151-14237-5	•STIFFENER - EXTENDED LEADING EDGE STA 229	001-370	1
	NAS221-12	•SCREW -	001-370	2
	AN960D10	•WASHER -	001-370	2
	AN365-1032	•NUT -	001-370	2
-32	172-14712-57	•RIB - PORT WING EXTENDED LE STA 238	001-370	1
	172-14712-58	•RIB - STARBOARD WING EXTENDED LE STA 238	001-370	1
-33	172-14712-61	•RIB - PORT WING EXTENDED LE STA 250	001-370	1
	172-14712-62	•RIB - STARBOARD WING EXTENDED LE STA 250	001-370	1
-34	172-14711-39	•ANGLE - EXTENDED LE UP• HINGE ATT STA 250	001-370	1
	NAS221-10	•SCREW -	001-370	2
	AN960D10	•WASHER -	001-370	2
	AN365-1032	•NUT -	001-370	2
-35	172-14712-63	•RIB ASSY - PORT WING EXTENDED LEADING EDGE OUTBOARD CANTED WING STA 262	001-370	1
	172-14712-64	•RIB ASSY - STARBOARD WING EXTENDED LEADING EDGE OUTBOARD CANTED WING STA 262	001-370	1
-36	172-14711-9	•STRINGER - PORT WING EXTENDED LEADING EDGE INBOARD UPPER FORWARD	001-370	1
	172-14711-10	•STRINGER - STARBOARD WING EXTENDED LEADING EDGE INBOARD UPPER FORWARD	001-370	1
-37	172-14711-7	•STRINGER - PORT WING EXTN LE INBD UP• REAR	001-210	1
	172-14711-977	•STRINGER - PORT WING EXTN LE INBD UP• REAR	211-370	1
		OR		
	172-14711-7	•STRINGER - PORT WING EXTN LE INBD UP• REAR (WITH 172-14711-3 SKIN)	211-370	
	172-14711-8	•STRINGER - STARBOARD WING EXTENDED LEADING EDGE INBOARD UPPER REAR	001-210	1
	172-14711-978	•STRINGER - STBD WING EXTN LE INBD UP• REAR	211-370	1
		OR		
	172-14711-8	•STRINGER - STBD WING EXTN LE INBD UP• REAR (WITH 172-14711-4 SKIN)	211-370	
-38	172-14711-11	•STRINGER - PORT WING EXTN LE OUTBD UP• FWD	001-370	1
	172-14711-12	•STRINGER - STARBOARD WING EXTENDED LEADING EDGE OUTBOARD UPPER FORWARD	001-370	1
-39	172-14711-13	•STRINGER - PORT WING EXTN LEADING EDGE OUTBOARD UPPER REAR	001-370	1
	172-14711-14	•STRINGER - STARBOARD WING EXTENDED LEADING EDGE OUTBOARD UPPER REAR	001-370	1
-40	172-14711-17	•STRINGER - PORT WING EXTN LE INBD LWR FWD	001-370	1
	172-14711-18	•STRINGER - STBD WING EXTN LE INBD LWR FWD	001-370	1
-41	172-14711-15	•STRINGER - PORT WING EXTN LE INBD LWR REAR	001-370	1

FIGURE AND INDEX NUMBER	GROUP / MAJOR ASSEMBLY / PART NUMBER	WING / OUTER WING EXTENDED LEADING EDGE / 1234567 NOMENCLATURE	CODE	UNITS PER ASSY
15 -	172-14711-16	•STRINGER - STBD WING EXTN LE INBD LWR REAR	001-370	1
-42	172-14711-21	•STRINGER - PORT WING EXTN LE OUTBD LWR FWD	001-370	1
	172-14711-22	•STRINGER - STBD WING EXTN LE OUTBD LWR FWD	001-370	1
-43	172-14711-19	•STRINGER - PORT WING EXTENDED LEADING EDGE OUTBOARD LOWER REAR	001-370	1
	172-14711-20	•STRINGER - STARBOARD WING EXTENDED LEADING EDGE OUTBOARD LOWER REAR	001-370	1
-44	140-14014-5	•JOINT - PORT WING EXTENDED LE FORWARD SPAR INBOARD UPPER	001-370	1
	140-14014-6	•JOINT - STARBOARD WING EXTN LE FWD SPAR INBOARD UPPER	001-370	1
	151-14545-5	•JOINT - PORT WING EXTENDED LE FORWARD SPAR INBOARD LOWER	001-370	1
	151-14545-6	•JOINT - STARBOARD WING EXTN LE FWD SPAR INBOARD LOWER	001-370	1
-45	151-14546-5	•JOINT - PORT WING EXTENDED LE FORWARD SPAR CENTRE INBD UPPER	001-370	1
	151-14546-6	•JOINT - STARBOARD WING EXTN LE FWD SPAR CENTRE INBD UPPER	001-370	1
	151-14547-5	•JOINT - PORT WING EXTENDED LE FORWARD SPAR CENTRE INBD LOWER	001-370	1
	151-14547-6	•JOINT - STBD WING EXTN LE FWD SPAR CENTRE INBOARD LOWER	001-370	1
-46	151-14548-7	•JOINT - PORT WING EXTENDED LE FORWARD SPAR CENTRE OUTBD UPPER	001-370	1
	151-14548-8	•JOINT - STARBOARD WING EXTN LE FWD SPAR CENTRE OUTBD UPPER	001-370	1
	151-14549-11	•JOINT - PORT WING EXTENDED LE FORWARD SPAR CENTRE OUTBD LOWER	001-370	1
	151-14549-12	•JOINT - STARBOARD WING EXTN LE FWD SPAR CENTRE OUTBD LOWER	001-370	1
-47	151-14548-9	•JOINT - PORT WING EXTENDED LE FORWARD SPAR OUTBOARD UPPER	001-370	1
	151-14548-10	•JOINT - STARBOARD WING EXTN LE FWD SPAR OUTBOARD UPPER	001-370	1
	151-14549-13	•JOINT - PORT WING EXTENDED LE FORWARD SPAR OUTBOARD LOWER	001-370	1
	151-14549-14	•JOINT - STARBOARD WING EXTN LE FWD SPAR OUTBOARD LOWER	001-370	1
	172-14711-25	•SPLICE - LEADING EDGE STA 176 TO 187	001-370	1
	140-14204-1	•CLIP ASSY - WOP DOOR TO FORWARD SPAR ATT	001-370	4
	140-14216	•CLIP ASSY - WING OUTER PANEL DOOR TO FWD SPAR ATTACHING STA 100	001-370	2
	140-14216-3	••CLIP - WOP DOOR TO FWD SPAR ATT STA 100	001-370	1
-48	191-14261-801	•ANGLE ASSY - PORT WOP EXTN REMOVABLE LE (AS PER EO 05-5E-6A/160)	001-370	1
	191-14261-802	•ANGLE ASSY - STBD WOP EXTN REMOVABLE LE (AS PER EO 05-5E-6A/160)	001-370	1
-49	AN509-416R12	•SCREW - (ANGLE ATTACHING) (AS PER EO 05-5E-6A/160)	001-370	2
	AN960PD416	•WASHER -	001-370	2
	AN364-428	•NUT -	001-370	2
-50	191-14262-801	•BRACKET ASSY - PORT WOP EXTN REMOVABLE LE (AS PER EO 05-5E-6A/160)	001-370	1
	191-14262-802	•BRACKET ASSY - STBD WOP EXTN REMOVABLE LE (AS PER EO 05-5E-6A/160)	001-370	1
	13B-13026-1	•WEDGE ASSY - PORT WOP EXTENDED INBOARD (AS PER EO 05-5E-6A/160)	001-370	1
	13B-13026-2	•BRACKET ASSY - STARBOARD WOP EXTENDED INBD (AS PER EO 05-5E-6A/160)	001-370	1
-51	13B-13026-3	••SKIN - PORT WING O/PNL EXTN INBOARD WEDGE	001-370	1
	13B-13026-4	••SKIN - STBD WING O/PNL EXTN INBOARD WEDGE	001-370	1
-52	171-14261-1	••ANGLE - PORT WOP EXTENDED REMOVABLE LE	001-370	1
	191-14261-2	••ANGLE - STBD WOP EXTENDED REMOVABLE LE	001-370	1

FIGURE AND INDEX NUMBER	GROUP / MAJOR ASSEMBLY / PART NUMBER	WING / OUTER WING EXTENDED LEADING EDGE / 1234567 NOMENCLATURE	CODE	UNITS PER ASSY
15 -53	191-14236	••SEAL - WING O/PNL EXTENDED REMOVABLE LE	001-370	1
-54	AN4-5A	•BOLT - (WEDGE ATTACHING) (AS PER EO 05-5E-6A/160)	001-370	1
	AN960C416	•WASHER -	001-370	1
-55	172-14711-3	SKIN - PORT WING LE INBOARD (SEE FIG. 16)		REF
		(CONTINUED SEE FIG. 16)		

FIGURE AND INDEX NUMBER	PART NUMBER	1234567 NOMENCLATURE	CODE	UNITS PER ASSY
		THIS PAGE DELETED		

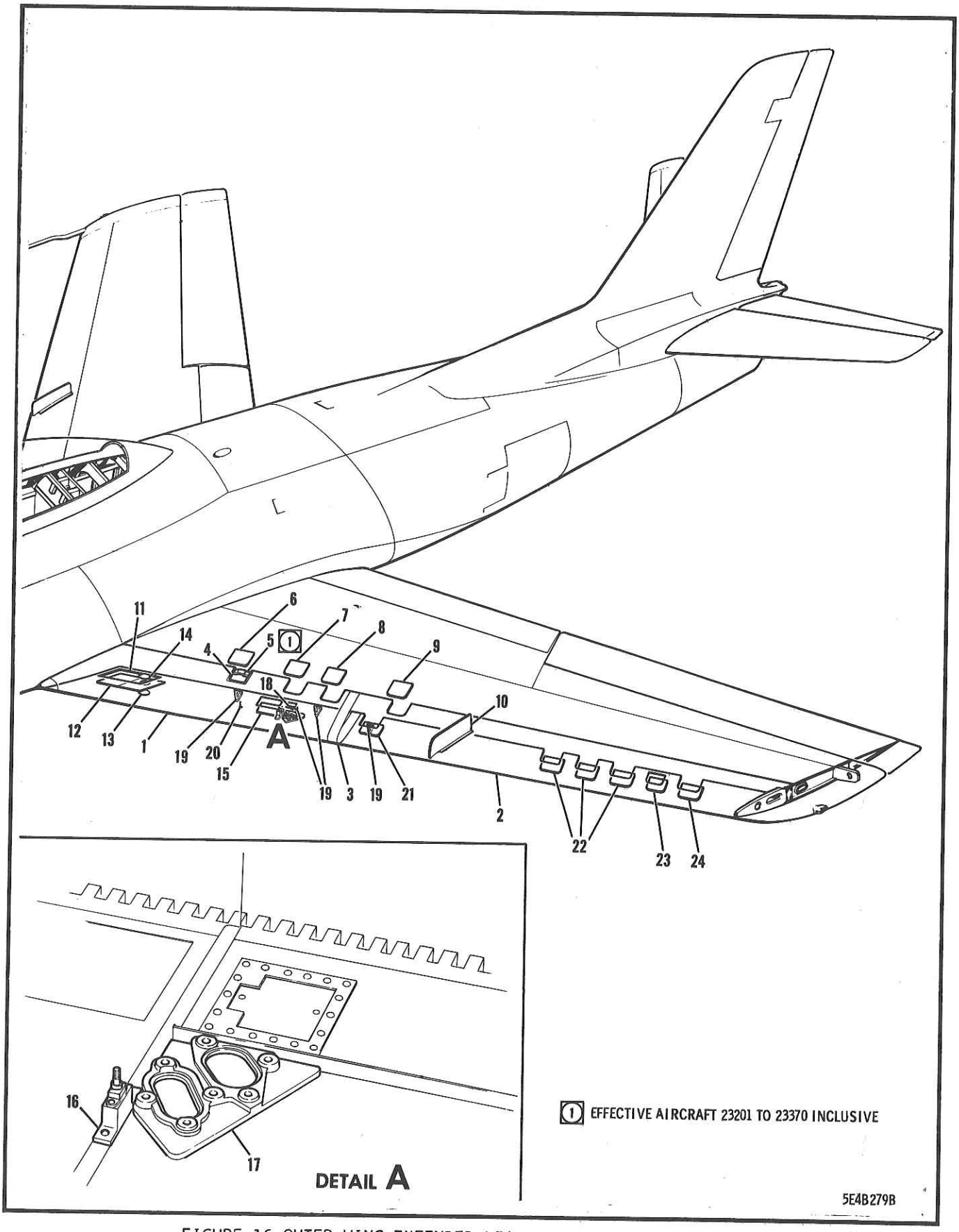

FIGURE 16 OUTER WING EXTENDED LEADING EDGE SKINS & DOORS
(EFFECTIVE AIRCRAFT 23001 TO 23370 INCL)

FIGURE AND INDEX NUMBER	GROUP WING MAJOR ASSEMBLY OUTER WING EXTENDED LEADING EDGE SKINS & DOORS PART NUMBER	1234567 NOMENCLATURE	CODE	UNITS PER ASSY
16 -	172-14711-1	LEADING EDGE ASSY - PORT WOP EXTENDED (SEE FIG. 15)		REF
	172-14711-2	LEADING EDGE ASSY - STARBOARD WOP EXTENDED (SEE FIG. 15)		REF
- 1	172-14711-3	•SKIN - PORT WOP EXTN LEADING EDGE INBOARD	001-210	1
	172-14711-979	•SKIN - PORT WOP EXTN LEADING EDGE INBOARD	211-370	1
		OR		
	172-14711-3	•SKIN - PORT WOP EXTENDED LEADING EDGE INBD (WITH 172-14711-7 STRINGER)	211-370	
	172-14711-4	•SKIN - STBD WOP EXTENDED LEADING EDGE INBD	001-210	1
	172-14711-980	•SKIN - STBD WOP EXTENDED LEADING EDGE INBD	211-370	1
	172-14711-4	•SKIN - STBD WOP EXTENDED LEADING EDGE INBD (WITH 172-14711-8 STRINGER)	211-370	
- 2	172-14711-5	•SKIN - PORT WOP EXTN LEADING EDGE OUTBOARD	001-370	1
	172-14711-6	•SKIN - STBD WOP EXTN LEADING EDGE OUTBOARD	001-370	1
- 3	172-14711-27	•SPLICE - PORT WOP EXTN LE ATT STA 129-131	001-370	1
	172-14711-28	•SPLICE - STBD WOP EXTN LE ATT STA 129-131	001-370	1
- 4	172-14711-959	•DOUBLER - WOP EXTN LEADING EDGE ROCKET JETTISON ACCESS DOOR STA 86-96	001-210	1
	172-14711-959	•DOUBLER - WOP EXTN LEADING EDGE DROP TANK DOOR STA 86-96	211-370	1
- 5	13A-64095-1	•BRACKET - PORT WOP EXTN LE DROP TANK IND	201-370	1
	13A-64095-2	•BRACKET - STBD WOP EXTN LE DROP TANK IND	201-370	1
- 6	172-14711-961	•DOOR - PORT WOP EXTENDED LEADING EDGE ROCKET JETTISON ACCESS STA 86-96	001-210	1
	172-14711-961	•DOOR - PORT WOP EXTN LE DROP TANK EMPTY WARNING STA 86-96	211-370	1
	172-14711-962	•DOOR - STARBOARD WOP EXTN LE ROCKET JETT ACC STA 86-96	001-210	1
	172-14711-962	•DOOR - STBD WOP EXTN LEADING EDGE DROP TANK EMPTY WARNING STA 86-96	211-370	1
	AN509-10R10	•SCREW - (ACCESS DOOR ATTACHING)	001-370	16
	7S13-1032-18	•SCREW - 100-DEG FLUSH HEAD (NAA) (ACCESS DOOR ATTACHING)	001-370	1
	AN960D10L	•WASHER -	001-370	1
	AN380-2-2	•COTTER-PIN -	001-370	1
	172-14711-115	•DOUBLER - WOP EXTN LE FUEL LINE ACCESS DOOR STA 109-117	001-370	1
- 7	172-14711-113	•DOOR - WOP EXTN LEADING EDGE FUEL LINE ACCESS STA 109-117	001-370	1
	AN509-10R10	•SCREW - (ACCESS DOOR ATTACHING)	001-370	16
	7S13-1032-18	•SCREW - 100-DEG FLUSH HEAD (NAA) (ACCESS DOOR ATTACHING)	001-370	1
	AN960D10L	•WASHER -	001-370	1
	AN380-2-2	•COTTER-PIN -	001-370	1
	172-14711-115	•DOUBLER - WOP EXTENDED LEADING EDGE ROCKET JETTISON ACCESS DOOR STA 117-128	001-210	1
	172-14711-989	•DOUBLER - PORT WOP EXTN LE GROUND & ROCKET JACK (AS PER EO 05-5E-6A/80)	211-300	1
	172-14711-983	•DOUBLER - PORT WOP EXTENDED LEADING EDGE GROUND & ROCKET JACK TERMINAL STRIP ACCESS DOOR STA 117-128	301-370	1
	172-14711-990	•DOUBLER - STBD WOP EXTN LE GROUND & ROCKET JACK (AS PER EO 05-5E-6A/80)	211-300	1
	172-14711-984	•DOUBLER - STARBOARD WOP EXTENDED LEADING EDGE GROUND & ROCKET JACK TERMINAL STRIP ACCESS DOOR STA 117-128	301-370	1
- 8	172-14711-113	•DOOR - WOP EXTENDED LEADING EDGE ROCKET JETTISON ACCESS STA 117-128	001-210	1
	172-14711-987	•DOOR - PORT WOP EXTN LE GROUND & ROCKET JACK TERMINAL STRIP ACC DOOR STA 117-128 (AS PER EO 05-5E-6A/80)	211-300	1

FIGURE AND INDEX NUMBER	GROUP WING MAJOR ASSEMBLY OUTER WING EXTENDED LEADING EDGE SKINS & DOORS PART NUMBER	1234567 NOMENCLATURE	CODE	UNITS PER ASSY
16 -	172-14711-981	•DOOR - PORT WOP EXTN LE GRD & ROCKET JACK TERM. STRIP ACCESS STA 117-128	301-370	1
	172-14711-988	•DOOR - STBD WOP EXTN LE GROUND & ROCKET JACK TERMINAL STRIP ACC DOOR STA 117-128 (AS PER EO 05-5E-6A/80)	211-300	1
	172-14711-982	•DOOR - STBD WOP EXTN LE GRD & ROCKET JACK TERM. STRIP ACCESS STA 117-128	301-370	1
	AN509-10R10	•SCREW - (ACCESS DOOR ATTACHING)	A1	16
	AN509-10R10	•SCREW - (AS PER EO 05-5E-6A/80)	211-300	15
	7S13-1032-18	•SCREW - 100-DEG FLUSH HEAD (NAA)	001-370	1
	AN960D10L	•WASHER -	001-370	1
	AN380-2-2	•COTTER-PIN -	001-370	1
	172-14711-975	•DOUBLER - PORT WOP EXTN LE ACCESS DOOR STA 142-153	001-370	1
	172-14711-976	•DOUBLER - STARBOARD WOP EXTN LE ACC DOOR STA 142-153	001-370	1
- 9	172-14711-969	•DOOR - PORT WOP EXTN LE ACC STA 142-153	001-370	1
	172-14711-970	•DOOR - STBD WOP EXTN LE ACC STA 142-153	001-370	1
	AN509-10R10	•SCREW - (ACCESS DOOR ATTACHING)	001-370	18
	7S13-1032-18	•SCREW - 100-DEG FLUSH HEAD (NAA)	001-370	1
	AN960D10L	•WASHER -	001-370	1
	AN380-2-2	•COTTER-PIN -	001-370	1
-10	191-14850-1	•FENCE - PORT WOP EXTN LEADING EDGE BP 145	001-370	1
	191-14850-2	•FENCE - STBD WOP EXTN LEADING EDGE BP 145	001-370	1
	AN509-10R11	•SCREW - (FENCE ATTACHING)	001-370	8
-11	172-14711-79	•DOUBLER - PORT WOP EXTN LE LINE ACC INBD	001-370	1
	172-14711-80	•DOUBLER - STBD WOP EXTN LE LINE ACC INBD	001-370	1
-12	172-14711-81	•DOOR - PORT WOP EXTN LE LINE ACC INBOARD WING STA 37-46	001-370	1
	172-14711-82	•DOOR - STBD WOP EXTN LE LINE ACC INBOARD WING STA 37-46	001-370	1
	AN509-10R10	•SCREW - (ACCESS DOOR ATTACHING)	001-370	40
	172-14711-73	•DOUBLER - PORT WOP EXTENDED LEADING EDGE FUEL PRESSURE DRAIN DOOR	001-370	1
	172-14711-74	•DOUBLER - STBD WOP EXTENDED LEADING EDGE FUEL PRESSURE DRAIN DOOR	001-370	1
	99833-P.130	•RECEPTACLE - AIRLOC FASTENER STUD (MKM)	001-370	1
	S-1191	•CLIP - BALL CHAIN ATTACHING (CAN)	001-370	1
	S-1192-1-3	•CHAIN - BEAD (CAN)	001-370	1
-13	172-14711-75	•DOOR - PORT WOP EXTN LE FUEL PRESS. DRAIN WING STA 46-60	001-370	1
	172-14711-76	•DOOR - STBD WOP EXTN LE FUEL PRESS. DRAIN WING STA 46-60	001-370	1
	172-14711-77	•CLIP - WOP EXTN LE PRESSURE DRAIN DOOR	001-370	1
	S-1191	•CLIP - BALL CHAIN ATTACHING (CAN)	001-370	1
	98265-1-110	•STUD - FLUSH HEAD AIRLOC FASTENER (MKM)	001-370	1
	99836	•CROSS-PIN - AIRLOC FASTENER (MKM)	001-370	1
	172-14711-71	•DOUBLER - WOP EXTN LE AIRSPEED LINE DRAIN COVER (STARBOARD)	001-370	1
-14	8C3-3-064	•COVER - BOLT ACCESS (NAA) (STARBOARD WING) (AIRSPEED LINE DRAIN)	001-370	1
	7S13-1032-16	•SCREW - 100-DEG FLUSH HEAD (NAA) (STARBOARD WING)	001-370	1
	AN960D10L	•WASHER - (STARBOARD WING)	001-370	1
	AN380-2-2	•COTTER-PIN - (STARBOARD WING)	001-370	1
	172-14711-953	•DOUBLER - WOP EXTENDED LEADING EDGE FUEL PRESSURE LINE ACCESS DOOR	001-210	1
	172-14711-183	•DOUBLER - WOP EXTENDED LEADING EDGE FUEL PRESSURE LINE ACCESS DOOR	001-370	1
-15	172-14711-951	•DOOR - PORT WOP EXTN LE FUEL AIR-PRESSURE LINE ACCESS STA 99-108	001-210	1

FIGURE AND INDEX NUMBER	GROUP WING MAJOR ASSEMBLY OUTER WING EXTENDED LEADING EDGE SKINS & DOORS PART NUMBER	1234567 NOMENCLATURE	CODE	UNITS PER ASSY
16 -	172-14711-181	•DOOR - PORT WOP EXTENDED LEADING EDGE FUEL & AIR-PRESSURE LINE ACCESS	211-370	1
	172-14711-952	•DOOR - STARBOARD WOP EXTENDED LE FUEL & AIR-PRESSURE LINE ACCESS	001-210	1
	172-14711-182	•DOOR - STARBOARD WOP EXTENDED LEADING EDGE FUEL & AIR-PRESSURE LINE ACCESS	211-370	1
	AN509-10R10	•SCREW - (ACCESS DOOR ATTACHING)	001-370	15
	7S13-1032-18	•SCREW - 100-DEG FLUSH HEAD (NAA) (ACCESS DOOR ATTACHING)	001-370	1
	AN960D10	•WASHER -	001-370	1
	AN380-2-2	•COTTER-PIN -	001-370	1
-16	191-14250	•PIN ASSY - WING OUTER PANEL 200-GAL DROP TANK FAIRING BP 118	001-370	1
	191-14250-11	•SPARE PART ASSY FOR 191-14250	001-370	
	172-14229	••PIN - WOP 200-GAL DROP TANK FAIR• BP 118	001-370	1
	191-14249	••FITTING - WING OUTER PANEL 200-GAL DROP TANK FAIRING BP 118	001-370	1
	AN380-2-2	••COTTER-PIN -	001-370	1
-17	13A-64031-1	•BASE-PLATE - PORT WING DROP FUEL TANK FUEL & AIR LINE DISCONNECT FITTING	001-370	1
	13A-64031-2	•BASE-PLATE - STARBOARD WING DROP FUEL TANK FUEL & AIR LINE DISCONNECT FITTING	001-370	1
	172-14711-51	•DOUBLER - WOP EXTN LE ELECTRICAL ACC DOOR	001-370	1
-18	172-14711-53	•DOOR - WING OUTER PANEL EXTENDED LEADING EDGE ELECTRICAL ACCESS STA 113-116	001-370	1
	AN509-8R8	•SCREW - (ACCESS DOOR ATTACHING)	001-370	2
	2C15-3	•CLIP - (NAA)	001-370	2
	2C16-15	•CLIP - CONDUIT (NAA)	001-370	1
-19	170-14691-1	•COVER - PORT WOP ELEC JACK ACCESS HOLE	001-370	4
	170-14691-2	•COVER - STARBOARD WOP ELEC JACK ACC HOLE	001-370	4
-20	7S13-1032-13	•SCREW - 100-DEG FLUSH HEAD (NAA)	001-370	4
	157-318101	•SPRING - COCKPIT CANOPY SEAL INFL PLUNGER	001-370	4
	2W1AL13-16-64	•WASHER - PLAIN (NAA)	001-370	4
	AN310-3	•NUT -	001-370	4
	AN380-2-2	•COTTER-PIN -	001-370	4
	172-14711-199	•CLIP - PORT WOP EXTENDED LEADING EDGE STA 86 & 104 & 120 & 135	001-370	4
	172-14711-200	•CLIP - STARBOARD WOP LEADING EDGE STA 86 & 105 & 120 & 135	001-370	4
	172-14711-191	•DOUBLER - WOP EXTN LE REL MECH ACC DOOR	001-370	1
-21	172-14711-189	•DOOR - PORT WOP EXTN LE STA 133-136 BOMB & RELEASE MECHANISM ACCESS	001-370	1
	172-14711-190	•DOOR - STARBOARD WOP EXTN LE STA 133-136 BOMB & RELEASE MECHANISM ACCESS	001-370	1
	AN509-10R10	•SCREW - (ACCESS DOOR ATTACHING)	001-370	16
	7S13-1032-18	•SCREW - 100-DEG FLUSH HEAD (NAA)	001-370	1
	AN960D10L	•WASHER -	001-370	1
	AN380-2-2	••COTTER-PIN -	001-370	1
	172-14711-45	•DOUBLER - WOP EXTN LE HYD ACCESS DOOR (STARBOARD WING)	001-370	3
-22	172-14711-43	•DOOR - WOP EXTENDED LE STA 191 & 202 & 215 HYDRAULIC ACCESS (STARBOARD)	001-370	3
	AN509-10R10	•SCREW - (ACC DOOR) (STARBOARD WING)	001-370	48
	7S13-1032-18	•SCREW - 100-DEG FLUSH HEAD (NAA) (STARBOARD WING)	001-370	3
	AN960D10L	•WASHER - (STARBOARD WING)	001-370	3
	AN380-2-2	•COTTER-PIN - (STARBOARD WING)	001-370	3
	172-14711-67	•DOUBLER - WOP EXTN LE HYD ACC DOOR (PORT)	001-370	1
-23	172-14711-65	•DOOR - WOP EXTN LE HYD ACCESS DOOR (PORT)	001-370	1
	AN509-10R10	•SCREW - (ACCESS DOOR ATTACHING PORT WING)	001-370	15

FIGURE AND INDEX NUMBER	GROUP WING MAJOR ASSEMBLY OUTER WING EXTENDED LEADING EDGE SKINS & DOORS PART NUMBER	1234567 NOMENCLATURE	CODE	UNITS PER ASSY
16 -	7S13-1032-18	•SCREW - 100-DEG FLUSH HEAD (NAA) (PORT WING)	001-370	1
	AN960D10L	•WASHER - (PORT WING)	001-370	1
	AN380-2-2	•COTTER-PIN - (PORT WING)	001-370	1
	172-14711-45	•DOUBLER - WOP EXTN LE HYD ACC DOOR (PORT)	001-370	1
-24	172-14711-43	•DOOR - WOP EXTENDED LE HYDRAULIC ACCESS STA 230-236 (PORT)	001-370	1
	AN509-10R10	•SCREW - (PORT WING)	001-370	16
	7S13-1032-18	•SCREW - 100-DEG FLUSH HD (NAA) (PORT WING)	001-370	1
	AN960D10L	•WASHER - (PORT WING)	001-370	1
	AN380-2-2	•COTTER-PIN - (PORT WING)	001-370	1
		(CONTINUED SEE FIG. 17)		

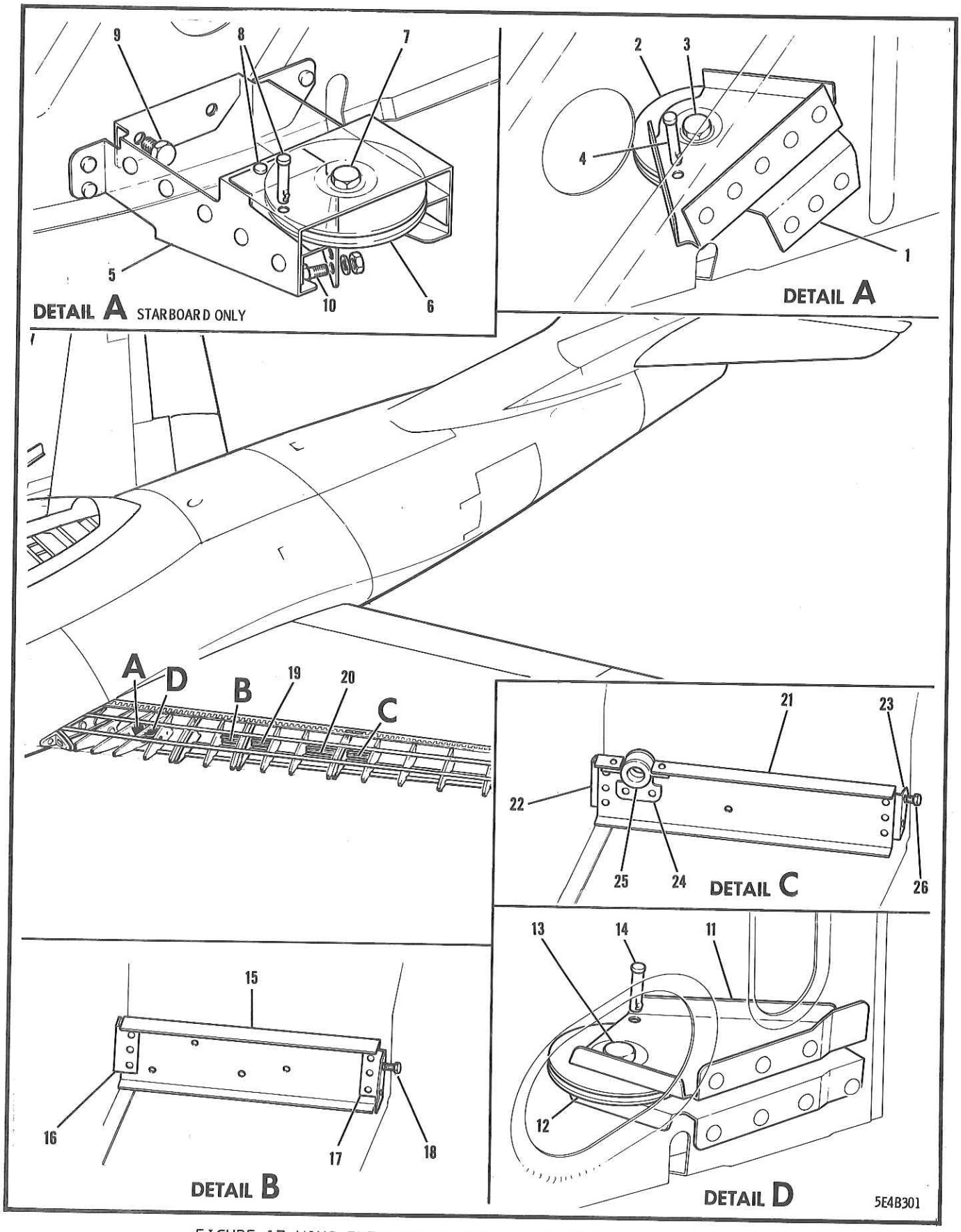

FIGURE 17 WING EXTENDED LEADING EDGE EMERGENCY PROVISIONS
(EFFECTIVE AIRCRAFT 23001 TO 23210 INCL)

FIGURE AND INDEX NUMBER	GROUP WING MAJOR ASSEMBLY WING EXTENDED LEADING EDGE EMERGENCY PROVISIONS PART NUMBER	1234567 NOMENCLATURE	CODE	UNITS PER ASSY
17 -	172-14711-1	LEADING EDGE ASSY - PORT WOP EXTENDED (SEE FIG. 15)		REF
	172-14711-2	LEADING EDGE ASSY - STARBOARD WOP EXTENDED (SEE FIG. 15)		REF
	170-68717	•BRACKET ASSY - EMERGENCY JETT WING STA 44 (PORT WING)	001-210	1
- 1	170-68717-5	••BRACKET - EMERGENCY JETTISON WING STA 44 (PORT WING)	001-210	1
	170-68717-3	••BRACKET - EMERGENCY JETTISON WING STA 44 (PORT WING)	001-210	1
- 2	AN210-2B	••PULLEY -	001-210	1
- 3	AN3-7A	••BOLT - (PULLEY TO BRACKET ATTACHING)	001-210	1
	AN960D10	••WASHER -	001-210	2
	AN365-1032	••NUT -	001-210	1
- 4	NAS427K9	•PIN - (PORT WING)	001-210	1
- 5	170-68716	•BRACKET ASSY - EMERGENCY JETT WING STA 44 (STARBOARD WING)	001-210	1
- 6	AN210-2B	••PULLEY -	001-210	1
- 7	AN3-7A	••BOLT - (PULLEY ATTACHING)	001-210	1
	AN960D10	••WASHER -	001-210	2
	AN365-1032	••NUT -	001-210	1
- 8	NAS427K9	•PIN - (STARBOARD WING)	001-210	2
- 9	AN3-4A	•BOLT - (STARBOARD WING)	001-210	2
	AN960D10	•WASHER - (STARBOARD WING)	001-210	2
	AN365-1032	•NUT - (STARBOARD WING)	001-210	2
-10	AN515-8-6	•SCREW - (STARBOARD WING)	001-210	AR
	AN960D8	•WASHER - (STARBOARD WING)	001-210	AR
	AN365-832	•NUT - (STARBOARD WING)	001-210	AR
-11	170-68719	•BRACKET ASSY - PORT WING EMERGENCY JETT WING STA 54 (SEE SECTION 12)	001-210	1
	170-68718	•BRACKET ASSY - STARBOARD WING EMERGENCY JETT WING STA 54	001-210	1
-12	AN210-2B	••PULLEY -	001-210	1
-13	AN3-7A	••BOLT - (PULLEY ATTACHING)	001-210	1
	AN960D10	••WASHER -	001-210	2
	AN365-1032	••NUT -	001-210	1
-14	NAS427K9	•PIN -	001-210	1
	13A-10010-1	•PROVISIONS INSTL - PORT WING EXTENDED LE EMERGENCY JETTISON	001-210	NP
	13A-10010-2	•PROVISIONS INSTL - STBD WING EXTENDED LE EMERGENCY JETTISON	001-210	NP
-15	170-14690-3	••CHANNEL - PORT WING BOMB & ROCKET EMY JETTISON MECHANISM SUPPORT STA 91	001-210	1
	170-14690-4	••CHANNEL - STARBOARD WING BOMB & ROCKET EMERGENCY JETT MECH SUPPORT STA 91	001-210	1
-16	170-14696-5	••ANGLE - PORT WOP BOMB & ROCKET EMERGENCY JETT MECH SUP. CHANNEL ATT STA 86	001-210	1
	13A-10010-8	••SHIM - EMERGENCY JETTISON PROVISIONS	001-210	1
	170-14696-6	••ANGLE - STARBOARD WOP BOMB & ROCKET EMY MECH SUP. CHANNEL ATTACHING STA 86	001-210	1
-17	170-14696-3	••ANGLE - PORT WOP BOMB & ROCKET EMERGENCY JETT MECH SUP. CHANNEL ATT STA 96	001-210	1
	170-14696-4	••ANGLE - STARBOARD WOP BOMB & ROCKET EMY JETT MECH SUP. CHANNEL ATT STA 96	001-210	1
-18	AN3-5A	••BOLT - (ANGLE ATTACHING)	001-210	4
	AN960D10	••WASHER -	001-210	12
	AN365-1032	••NUT -	001-210	4
-19	170-14690-5	••CHANNEL - PORT WING BOMB & ROCKET EMY JETTISON MECH SUPPORT STA 102	001-210	1
	170-14690-6	••CHANNEL - STARBOARD WING BOMB & ROCKET EMERGENCY JETTISON MECH SUP. STA 102	001-210	1

FIGURE AND INDEX NUMBER	GROUP WING MAJOR ASSEMBLY WING EXTENDED LEADING EDGE EMERGENCY PROVISIONS PART NUMBER	1234567 NOMENCLATURE	CODE	UNITS PER ASSY
17 -	170-14696-9	••ANGLE - PORT WOP BOMB & ROCKET EMERGENCY JETT MECH SUP• CHANNEL ATT STA 98	001-210	1
	13A-10010-6	••SHIM - EMERGENCY JETTISON PROVISIONS	001-210	1
	170-14696-10	••ANGLE - STARBOARD WOP BOMB & ROCKET EMY JETT MECH SUP• CHANNEL ATT STA 98	001-210	1
	170-14696-7	••ANGLE - PORT WOP BOMB & ROCKET EMERGENCY JETT MECH SUP• CHANNEL ATT STA 109	001-210	1
	13A-10010-8	••SHIM - EMERGENCY JETTISON PROVISIONS	001-210	1
	170-14696-8	••ANGLE - STARBOARD WOP BOMB & ROCKET EMY JETT MECH SUP• CHANNEL ATT STA 109	001-210	1
	AN3-5A	••BOLT - (ANGLE ATTACHING)	001-210	4
	AN960D10	••WASHER -	001-210	12
	AN365-1032	••NUT -	001-210	4
-20	170-14690-7	••CHANNEL - PORT WING BOMB & ROCKET EMY JETTISON MECHANISM SUPPORT STA 122	001-210	1
	170-14690-8	••CHANNEL - STARBOARD WING BOMB & ROCKET EMY JETT MECH SUPPORT STA 122	001-210	1
	170-14696-11	••ANGLE - PORT WOP BOMB & ROCKET EMY JETT MECH SUP• CHANNEL ATT STA 117 LH	001-210	1
	170-14696-12	••ANGLE - STBD WOP BOMB & ROCKET EMY JETT MECH SUP• CHANNEL ATT STA 117 RH	001-210	1
	170-14696-12	••ANGLE - STBD WOP BOMB & ROCKET EMY JETT MECH SUP• CHANNEL ATT STA 129 LH	001-210	1
	170-14696-11	••ANGLE - PORT WOP BOMB & ROCKET EMY JETT MECH SUP• CHANNEL ATT STA 129 RH	001-210	1
	13A-10010-4	••SHIM - EMERGENCY JETTISON PROVISIONS	001-210	1
	AN3-5A	••BOLT - (ANGLE ATTACHING)	001-210	4
	AN960D10	••WASHER -	001-210	12
	AN365-1032	••NUT -	001-210	4
-21	170-14690-9	••CHANNEL - PORT WING BOMB & ROCKET EMY JETTISON MECHANISM SUPPORT STA 136	001-210	1
	170-14690-10	••CHANNEL - STARBOARD WING BOMB & ROCKET EMY JETT MECH SUPPORT STA 136	001-210	1
-22	170-14696-11	••ANGLE - PORT WOP BOMB & ROCKET EMY JETT MECH SUP• CHANNEL ATT STA 131 LH	001-210	1
	170-14696-12	••ANGLE - STBD WOP BOMB & ROCKET EMY JETT MECH SUP• CHANNEL ATT STA 131 RH	001-210	1
-23	170-14696-12	••ANGLE - STBD WOP BOMB & ROCKET EMY JETT MECH SUP• CHANNEL ATT STA 142 LH	001-210	1
	170-14696-11	••ANGLE - PORT WOP BOMB & ROCKET EMY JETT MECH SUP• CHANNEL ATT STA 142 RH	001-210	1
-24	170-68741	••SUPPORT ASSY - BOMB & TANK EMY JETT LE	001-210	1
-25	4B16CF9-12	•••BEARING - SINTERED OIL IMPREGNATED (NAA)	001-210	1
-26	AN3-5A	••BOLT - (ANGLE ATTACHING)	001-210	4
	AN960D10	••WASHER -	001-210	12
	AN365-1032	••NUT -	001-210	4

-000-

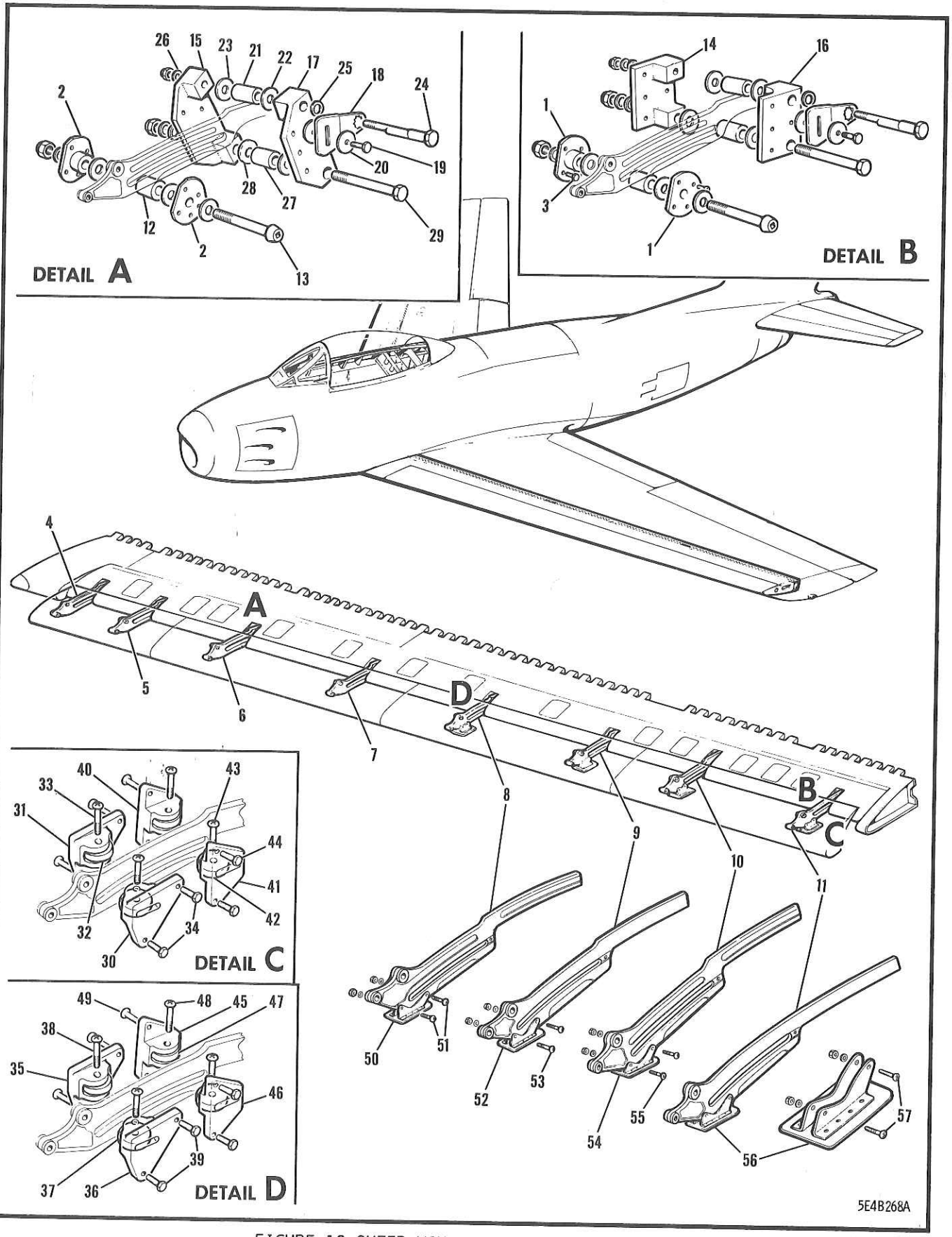

FIGURE 18 OUTER WING SLATTED LEADING EDGE
(EFFECTIVE AIRCRAFT 23371 & SUBS)

FIGURE AND INDEX NUMBER	GROUP WING MAJOR ASSEMBLY OUTER WING SLATTED LEADING EDGE PART NUMBER	1234567 NOMENCLATURE	CODE	UNITS PER ASSY
18 -	13B-13007-1	LEADING EDGE ASSY - PORT WING EXTN SLATTED (SEE FIG. 8) (FOR LOWER CODE SEE FIG. 15) (AS PER EO 05-5E-6B/9)	D4	1
	13B-13007-801	LEADING EDGE ASSY - PORT WING EXTN SLATTED	611-620	1
	13B-13007-805	LEADING EDGE ASSY - PORT WING EXTN SLATTED	737-	1
	13B-13007-807	SPARE PART ASSY FOR 13B-13007-1 & -801 & -805	371-	
	13B-13007-2	LEADING EDGE ASSY - STARBOARD WING EXTENDED SLATTED (SEE FIG. 8) (FOR LOWER CODE SEE FIG. 15) (AS PER EO 05-5E-6B/9)	371-736	1
	13B-13007-806	LEADING EDGE ASSY - STBD WING EXTN SLATTED	737-	1
	13B-13007-808	SPARE PART ASSY FOR 13B-13007-2 & -806	371-	
- 1	151-17207-3	•BRACKET - LEADING EDGE SLAT ROLLER SUPPORT (FORWARD)	371-	14
- 2	151-17207-5	•BRACKET - LEADING EDGE SLAT ROLLER SUPPORT (FORWARD) (LE STA 238 & 241)	371-	2
- 3	AN3-5A	•BOLT - (PORT)	371-	28
	NAS501-3-5A	•BOLT - (PORT) (LE STA 238 & 241)	371-	4
	AN3-5A	•BOLT - (STARBOARD)	371-	32
	2W18-10	•WASHER - FLAT (NAA)	371-	32
	AN365-1032	•NUT - (PORT)	371-	28
	AN363C1032	•NUT - (PORT LE STA 238 & 241)	371-	4
	AN365-1032	•NUT - (STARBOARD)	371-	32
- 4	202-17070	•TRACK ASSY - WOP SLAT POSNG LE STA 60 MPI	371-	1
- 5	202-17071	•TRACK ASSY - WOP SLAT POSNG LE STA 75 MPI	371-	1
- 6	202-17072	•TRACK ASSY - WOP SLAT POSNG LE STA 97 MPI	371-	1
- 7	202-17073	•TRACK ASSY - WOP SLAT POSNG LE STA 130 MPI	371-	1
- 8	202-17074	•TRACK ASSY - WOP SLAT POSNG LE STA 154 MPI	371-	1
- 9	202-17075	•TRACK ASSY - WOP SLAT POSNG LE STA 185 MPI	371-	1
-10	227-17076	•TRACK ASSY - WOP SLAT POSNG LE STA 209 MPI	371-	1
	202-17077-11	•TRACK ASSY - WOP SLAT POSITIONING LE STA 240 (PORT) MPI	D5	1
-11	202-17077-800	•TRACK ASSY - WOP SLAT POSITIONING LE STA 240 (PORT) MPI	611-620	1
	202-17077	•TRACK ASSY - WOP SLAT POSITIONING LE STA 240 (STARBOARD) MPI	371-	1
	180-17122-3	••BUSHING - WOP 15-DEG SLAT TRACK SERRATED ATTACHING MPI	371-	2
	180-17068-3	••BUSHING - LEADING EDGE SLAT TRACK SERRATED ATTACHING MPI	371-	2
	187-17032	••BUMPER ASSY - WOP LEADING EDGE SLAT TRACK	371-	1
-12	74220	•ROLLER-BEARING - (RBC) (FORWARD)	371-	8
	2W2SP25-36-95	•WASHER - THRUST (NAA)	371-	16
-13	NAS146-52	•BOLT - (FORWARD)	371-	8
	2W18-616	•WASHER - FLAT (NAA)	371-	8
	AN365-624	•NUT -	371-	8
-14	202-14840-7	•FITTING - WOP SLATTED LE REAR ROLLER SUP. LH (LE STA 59 & 74) (PORT)	371-	2
	202-14840-8	•FITTING - WOP SLATTED LE REAR ROLLER SUP. RH (LE STA 59 & 74) (STARBOARD)	371-	2
	202-14840-3	•FITTING - WOP SLATTED LEADING EDGE REAR ROLLER SUPPORT LH (LE STA 153 & 184 & 208 & 238) (PORT)	371-	4
	202-14840-4	•FITTING - WOP SLATTED LEADING EDGE REAR ROLLER SUPPORT RH (LE STA 153 & 184 & 208 & 238) (STARBOARD)	371-	4
-15	202-14840-11	•FITTING - WOP SLATTED LE REAR ROLLER SUP. LH (LE STA 96 & 128) (PORT)	371-	2

FIGURE AND INDEX NUMBER	GROUP WING MAJOR ASSEMBLY OUTER WING SLATTED LEADING EDGE PART NUMBER	1234567 NOMENCLATURE	CODE	UNITS PER ASSY
18 -	202-14840-12	•FITTING - WOP SLATTED LE REAR ROLLER SUP. RH (LE STA 96 & 128) (STARBOARD)	371-	2
-16	202-14840-10	•FITTING - WOP SLATTED LE REAR ROLLER SUP. RH (LE STA 61 & 76) (PORT)	371-	2
	202-14840-9	•FITTING - WOP SLATTED LE REAR ROLLER SUP. LH (LE STA 61 & 76) (STARBOARD)	371-	2
	202-14840-6	•FITTING - WOP SLATTED LEADING EDGE REAR ROLLER SUPPORT RH (LE STA 156 & 186 & 211 & 241) (PORT)	371-	4
	202-14840-5	•FITTING - WOP SLATTED LEADING EDGE REAR ROLLER SUPPORT LH (LE STA 156 & 186 & 211 & 241) (STARBOARD)	371-	4
-17	202-14840-14	•FITTING - WOP SLATTED LE REAR ROLLER SUP. RH (LE STA 99 & 131) (PORT)	371-	2
	202-14840-13	•FITTING - WOP SLATTED LE REAR ROLLER SUP. LH (LE STA 99 & 131) (STARBOARD)	371-	2
-18	227-14827	•LOCK - WOP TRACK ROLLER ADJUSTMENT BOLT	371-	8
-19	AN3-6A	•BOLT - (LEADING EDGE STA 61 & 76 & 99)	371-	3
	AN3-7A	•BOLT -	371-	5
-20	2W1AL13-32-100	•WASHER - PLAIN (NAA)	371-	8
	2W1AL13-32-32	•WASHER - PLAIN (NAA) (LE STA 61 & 76 & 99)	371-	3
	2W1AL13-32-125	•WASHER - PLAIN (NAA)	371-	5
-21	YR-137-CP-X	•ROLLER-BEARING - (MCG) (REAR UPPER)	371-	8
-22	2W2SP21-34-95	•WASHER - THRUST (NAA)	371-	8
-23	2W2SP17-34-95	•WASHER - THRUST (NAA)	371-	8
-24	202-17068-3	•BOLT - LEADING EDGE SLAT ROLLER ADJUSTMENT (LE STA 61 & 76 & 98)	371-	3
	202-17068-5	•BOLT - LEADING EDGE SLAT ROLLER ADJUSTMENT	371-	5
-25	2W18-616M	•WASHER - FLAT (NAA) (UNDER BOLT HEAD)	371-	8
	2W1AL25-24-91	•WASHER - PLAIN (NAA) (LE STA 131 & 156 & 186 & 211) (UNDER BOLT HEAD)	371-	4
	2W1AL17-24-91	•WASHER - PLAIN (NAA) (LE STA 129 & 153 & 184 & 208) (UNDER NUT)	371-	4
-26	2W18-416	•WASHER - FLAT (NAA)	371-	16
	AN365-428	•NUT -	371-	8
-27	74220	•ROLLER-BEARING - (MCG) (REAR LOWER)	371-	8
-28	2W2SP25-40-95	•WASHER - THRUST (NAA)	371-	16
-29	AN6-32A	•BOLT - (LE STA 59 & 74 & 143 & 153)	371-	4
	AN6-33A	•BOLT - (LE STA 129 & 184 & 208 & 238)	371-	3
	AN6-34A	•BOLT - (LEADING EDGE STA 183)	371-	1
	2W18-616	•WASHER - FLAT (NAA) (LEADING EDGE STA 59 & 74 & 143 & 153)	371-	8
	2W18-616	•WASHER - FLAT (NAA) (LEADING EDGE STA 129 & 184 & 208 & 238)	371-	3
	2W18-616	•WASHER - FLAT (NAA) (LEADING EDGE STA 183)	371-	1
	2W1AL25-24-91	•WASHER - PLAIN (NAA) (LEADING EDGE STA 183 UNDER HEAD & NUT)	371-	2
	AN365-624	•NUT -	371-	8
-30	227-14532-1	•FITTING ASSY - SLAT TRACK FWD SIDE LOAD ROLLER (PORT WING) (LE STA 84 & 129 & 184 & 238)	371-	4
	227-14532-2	•FITTING ASSY - SLAT TRACK FWD SIDE LOAD ROLLER (STARBOARD WING) (LEADING EDGE STA 74 & 129 & 184 & 238)	371-	4
-31	227-14530-1	••FITTING - SLAT TRACK FWD SIDE LOAD ROLLER (PORT WING LE)	371-	1
	227-14530-2	••FITTING - SLAT TRACK FWD SIDE LOAD ROLLER (STARBOARD WING LEADING EDGE)	371-	1
-32	3NBF512YJ	••NEEDLE-BEARING - AIRCRAFT (TOR)	371-	1
	4B20S3-009	••BUSHING - FLANGED PRESS-FIT (NAA)	371-	1

FIGURE AND INDEX NUMBER	GROUP WING MAJOR ASSEMBLY OUTER WING SLATTED LEADING EDGE PART NUMBER	1234567 NOMENCLATURE	CODE	UNITS PER ASSY
18 -33	NAS221-19	••SCREW - (BEARING ATTACHING)	371-	1
	AN365-1032	••NUT -	371-	1
	227-14534-3	•SHIM - WING LE SLAT TRACK FORWARD SIDE LOAD ROLLER	371-736	AR
	227-14534-5	•SHIM - WING LE SLAT TRACK FORWARD SIDE LOAD ROLLER	371-736	AR
	227-14534-7	•SHIM - WING LE SLAT TRACK FORWARD SIDE LOAD ROLLER	371-736	AR
	227-14534-803	•SHIM - WING LE SLAT TRACK FORWARD SIDE LOAD ROLLER	737-	AR
-34	AN3-6A	•BOLT - (ROLLER FITTING ATTACHING)	371-	8
	2W18-10	•WASHER - FLAT (NAA)	371-	12
	AN365-1032	•NUT -	371-	8
-35	227-14532-2	•FITTING ASSY - SLAT TRACK FWD SIDE LOAD ROLLER RH (PORT WING) (LE STA 76 & 131 & 186 & 241)	371-	4
	227-14532-1	•FITTING ASSY - SLAT TRACK FWD SIDE LOAD ROLLER LH (STBD WING) (LE STA 76 & 131 & 186 & 241)	371-	4
-36	227-14530-2	••FITTING - SLAT TRACK FORWARD SIDE LOAD ROLLER RH (PORT WING)	371-	1
	227-14530-1	••FITTING - SLAT TRACK FORWARD SIDE LOAD ROLLER LH (STARBOARD WING)	371-	1
-37	3NBF512YJ	••NEEDLE-BEARING - AIRCRAFT (TOR)	371-	1
	4B20S3-009	••BUSHING - FLANGED PRESS-FIT (NAA)	371-	1
-38	NAS221-19	••SCREW - (BEARING ATTACHING)	371-	1
	AN365-1032	••NUT -	371-	1
	227-14534-3	•SHIM - WING LEADING EDGE SLAT TRACK FORWARD SIDE LOAD ROLLER	371-736	AR
	227-14534-5	•SHIM - WING LEADING EDGE SLAT TRACK FORWARD SIDE LOAD ROLLER	371-736	AR
	227-14534-7	•SHIM - WING LEADING EDGE SLAT TRACK FORWARD SIDE LOAD ROLLER	371-736	AR
	227-14534-803	•SHIM - WING LEADING EDGE SLAT TRACK FORWARD SIDE LOAD ROLLER	737-	AR
-39	AN3-6A	•BOLT - (ROLLER FITTING ATTACHING)	371-	8
	2W18-10	•WASHER - FLAT (NAA)	371-	12
	AN365-1032	•NUT -	371-	8
-40	227-14533-1	•FITTING ASSY - SLAT TRACK REAR SIDE LOAD ROLLER LH (PORT WING) (LE STA 74 & 129 & 184 & 238)	371-	4
	227-14533-2	•FITTING ASSY - SLAT TRACK REAR SIDE LOAD ROLLER RH (STBD WING) (LE STA 74 & 129 & 184 & 238)	371-	4
-41	227-14531-1	••FITTING - SLAT TRACK REAR SIDE LOAD ROLLER LH (PORT WING LE)	371-	1
	227-14531-2	••FITTING - SLAT TRACK REAR SIDE LOAD ROLLER RH (STARBOARD WING LE)	371-	1
-42	3NBF512YJ	••NEEDLE-BEARING - AIRCRAFT (TOR)	371-	1
	4B20S3-009	••BUSHING - FLANGED PRESS-FIT (NAA)	371-	1
-43	NAS221-19	••SCREW - (BEARING ATTACHING)	371-	1
	AN365-1032	••NUT -	371-	1
	227-14535-3	•SHIM - WING LEADING EDGE SLAT TRACK REAR SIDE LOAD ROLLER	371-736	AR
	227-14535-5	•SHIM - WING LEADING EDGE SLAT TRACK REAR SIDE LOAD ROLLER	371-736	AR
	227-14535-7	•SHIM - WING LEADING EDGE SLAT TRACK REAR SIDE LOAD ROLLER	371-736	AR
	227-14535-803	•SHIM - WING LEADING EDGE SLAT TRACK REAR SIDE LOAD ROLLER	737-	AR

FIGURE AND INDEX NUMBER	GROUP WING MAJOR ASSEMBLY OUTER WING SLATTED LEADING EDGE PART NUMBER	1234567 NOMENCLATURE	CODE	UNITS PER ASSY
18 -44	AN3-6A	•BOLT - (ROLLER FITTING ATTACHING)	371-	8
	2W18-10	•WASHER - FLAT (NAA)	371-	8
	AN365-1032	•NUT -	371-	8
-45	227-14533-2	•FITTING ASSY - SLAT TRACK REAR SIDE LOAD ROLLER RH (PORT WING) (LE STA 76 & 131 & 186 & 241)	371-	4
	227-14533-1	•FITTING ASSY - SLAT TRACK REAR SIDE LOAD ROLLER LH (STBD WING) (LE STA 76 & 131 & 186 & 241)	371-	4
-46	227-14531-2	••FITTING - SLAT TRACK REAR SIDE LOAD ROLLER RH (PORT WING LE)	371-	1
	227-14531-1	••FITTING - SLAT TRACK REAR SIDE LOAD ROLLER LH (STARBOARD WING LE)	371-	1
-47	3NBF512YJ	•••NEEDLE-BEARING - AIRCRAFT (TOR)	371-	1
	4B20S3-009	••BUSHING - FLANGED PRESS-FIT (NAA)	371-	1
-48	NAS221-19	••SCREW - (BEARING ATTACHING)	371-	1
	AN365-1032	••NUT -	371-	1
	227-14535-3	•SHIM - WING LEADING EDGE SLAT TRACK REAR SIDE LOAD ROLLER	371-736	AR
	227-14535-5	•SHIM - WING LEADING EDGE SLAT TRACK REAR SIDE LOAD ROLLER	371-736	AR
	227-14535-7	•SHIM - WING LEADING EDGE SLAT TRACK REAR SIDE LOAD ROLLER	371-736	AR
	227-14535-803	•SHIM - WING LEADING EDGE SLAT TRACK REAR SIDE LOAD ROLLER	737-	AR
-49	AN3-6A	•BOLT - (ROLLER FITTING ATTACHING)	371-	8
	2W18-10	•WASHER - FLAT (NAA)	371-	8
	AN365-1032	•NUT -	371-	8
-50	227-14451-21	•DOOR ASSY - WING EXTN LE OUTBD CTR OUTBD SLAT OPENING (LE STA 154)	371-	1
-51	AN515-8R14	•SCREW - (DOOR TO TRACK ATTACHING)	371-	2
	2W18-8L	•WASHER - FLAT (NAA)	371-	2
	AN365-832	•NUT -	371-	2
-52	227-14451-31	•DOOR ASSY - WING EXTN LE OUTBD CTR OUTBD SLAT OPENING (LE STA 185)	371-	1
-53	AN515-8R14	•SCREW - (DOOR TO TRACK ATTACHING)	371-	2
	2W18-8L	•WASHER - FLAT (NAA)	371-	2
	AN365-832	•NUT -	371-	2
-54	227-14451-41	•DOOR ASSY - WING EXTN LE OUTBD CTR OUTBD SLAT OPENING (LE STA 209)	371-	1
-55	AN515-8R14	•SCREW - (DOOR TO TRACK ATTACHING)	371-	2
	2W18-8L	•WASHER - FLAT (NAA)	371-	2
	AN365-832	•NUT -	371-	2
-56	227-14451-51	•DOOR ASSY - WING EXTN LE OUTBD CTR OUTBD SLAT OPENING (LE STA 240)	371-	1
-57	7S14CN832-15A	•SCREW - CRE ROUND HEAD (NAA) (DOOR TO TRACK ATTACHING PORT WING)	371-	2
	AN515-8R14	•SCREW - (DOOR TO TRACK ATT STARBOARD WING)	371-	2
	2W18-8L	•WASHER - FLAT (NAA)	371-	2
	AN363C832	•NUT - (PORT)	371-	2
	AN365-832	•NUT - (STARBOARD)	371-	2
		(CONTINUED SEE FIG. 19)		

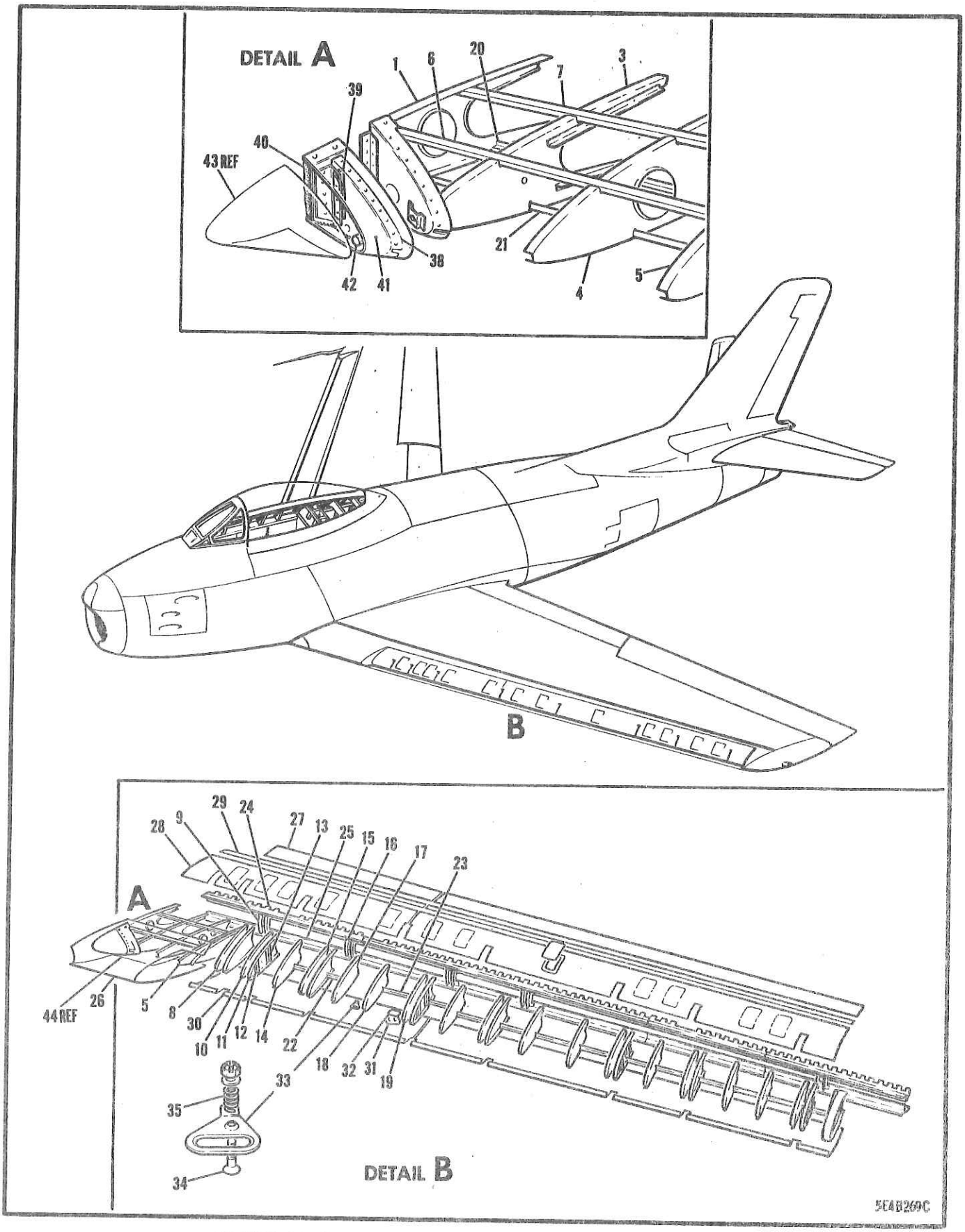

FIGURE 19 OUTER WING SLATTED LEADING EDGE STRUCTURE
(EFFECTIVE AIRCRAFT 23371 & SUBS)

FIGURE AND INDEX NUMBER	GROUP WING MAJOR ASSEMBLY OUTER WING SLATTED LEADING EDGE STRUCTURE PART NUMBER	1234567 NOMENCLATURE	CODE	UNITS PER ASSY
19 -	13B-13007-1	LEADING EDGE ASSY - PORT WING EXTN SLATTED (SEE FIG. 18)		REF
	13B-13007-2	LEADING EDGE ASSY - STBD WING EXTN SLATTED (SEE FIG. 18)		REF
- 1	172-14712-3	•RIB ASSY - PORT WOP EXTN SLATTED LE INBD CLOSE-OUT CANTED	371-	1
	172-14712-4	•RIB ASSY - STARBOARD WOP EXTN SLATTED LE INBOARD CLOSE-OUT CANTED	371-	1
	AN7510-2	•PLATE -	737-	1
	165-14339-1	•CLIP - PORT WOP LE CANTED WING STA 46	371-	1
	165-14339-2	•CLIP - STBD WOP LE CANTED WING STA 46	371-	1
	5W1-9-22-0	•SEAL - WEATHER (NAA) (UPPER)	371-	1
	5W1-9-15-0	•SEAL - WEATHER (NAA) (LOWER)	371-	1
- 2	172-14712-109	•INTERCOSTAL - PORT WOP EXTN SLATTED LE INBOARD CLOSE-OUT CANTED	371-	1
	172-14712-110	•INTERCOSTAL - STBD WOP EXTN SLATTED LE INBOARD CLOSE-OUT CANTED	371-	1
- 3	172-14712-965	•RIB ASSY - PORT WOP EXTENDED SLATTED LEADING EDGE STA 29 CANTED	371-	1
	172-14712-966	•RIB ASSY - STARBOARD WOP EXTENDED SLATTED LEADING EDGE STA 29 CANTED	371-	1
	191-14339-1	•CLIP - PORT WOP LE CANTED STA 47 UPPER	371-	1
	191-14339-2	•CLIP - STBD WOP LE CANTED STA 47 UPPER	371-	1
	AN3-5A	•BOLT - (CLIP ATTACHING)	371-	2
	NAS221-10	•SCREW - (CLIP ATTACHING)	371-	2
	2W18-10	•WASHER - FLAT (NAA)	371-	6
	AN365-1032	•NUT -	371-	4
- 4	172-14712-7	•RIB ASSY - PORT WOP EXTENDED SLATTED LEADING EDGE STA 40 CANTED	371-	1
	172-14712-8	•RIB ASSY - STARBOARD WOP EXTENDED SLATTED LEADING EDGE STA 40 CANTED	371-	1
	172-14712-69	••WEB - PORT WOP EXTENDED SLATTED LEADING EDGE STA 40 CANTED RIB	371-	1
	172-14712-70	••WEB - STARBOARD WOP EXTENDED SLATTED LEADING EDGE STA 40 CANTED RIB	371-	1
	13A-50018	••BRACKET - PLUG MOUNTING ELECTRICAL WING STA 56 CANTED RIB (WING TANK LIQUIDOMETER SUPPORT)	371-	1
	172-14712-103	••ANGLE - PORT WOP EXTN SLATTED LE WING STA 56 CANTED RIB	371-	1
	172-14712-104	••ANGLE - STBD WOP EXTN SLATTED LE WING STA 56 CANTED RIB	371-	1
- 5	202-14826-53	•RIB ASSY - PORT WING SLATTED LEADING EDGE STA 50 CANTED	371-	1
	202-14826-54	•RIB ASSY - STARBOARD WING SLATTED LEADING EDGE STA 50 CANTED	371-	1
	170-14244-11	•STIFFENER - WING OUTER PANEL LE STA 56	371-	1
	NAS221-10	•SCREW - (STIFFENER ATTACHING)	371-	2
	2W18-10	•WASHER - FLAT (NAA)	371-	2
	AN365-1032	•NUT -	371-	2
- 6	13B-13007-21	•STRINGER - PORT WING LE INBD UPPER FORWARD CANTED STA 38-66	371-	1
	13B-13007-22	•STRINGER - STBD WING LE INBD UPPER FORWARD CANTED STA 38-66	371-	1
- 7	13B-13007-19	•STRINGER - PORT WING LE INBOARD UPPER REAR CANTED STA 38-66	371-	1
	13B-13007-20	•STRINGER - STBD WING LE INBOARD UPPER REAR CANTED STA 38-66	371-	1
- 8	202-14826-953	•RIB ASSY - PORT WING SLATTED LE STA 59	371-	1
	202-14826-954	•RIB ASSY - STBD WING SLATTED LE STA 59	371-	1

FIGURE AND INDEX NUMBER	GROUP WING MAJOR ASSEMBLY OUTER WING SLATTED LEADING EDGE STRUCTURE PART NUMBER	1234567 NOMENCLATURE	CODE	UNITS PER ASSY
19 -	202-14826-5	•RIB ASSY - PORT WING SLATTED LE STA 61	371-	1
	202-14826-6	•RIB ASSY - STBD WING SLATTED LE STA 61	371-	1
- 9	151-14239-1	•STIFFENER - WOP LE TRACK RIB LE STA 59	371-	1
	NAS221-10	•SCREW - (STIFFENER ATTACHING)	371-	4
	2W18-10	•WASHER - FLAT (NAA)	371-	4
	AN365-1032	•NUT -	371-	4
	151-14536-3	•STIFFENER - WING OUTER PANEL LE STA 61	371-	1
	NAS221-10	•SCREW - (STIFFENER ATTACHING)	371-	4
	2W18-10	•WASHER - FLAT (NAA)	371-	4
	AN365-1032	•NUT -	371-	4
	227-14380-1	•DOUBLER - WOP EXTN SLATTED LEADING EDGE STA 59-61 (UPPER) (PORT)	371-	1
	227-14380-2	•DOUBLER - WOP EXTN SLATTED LEADING EDGE STA 59-61 (UPPER) (STARBOARD)	371-	1
-10	202-14826-7	•RIB - PORT WING SLATTED LE STA 74	371-	1
	202-14826-8	•RIB - STARBOARD WING SLATTED LE STA 74	371-	1
-11	202-14826-9	•RIB ASSY - PORT WING SLATTED LE STA 76	371-	1
	202-14826-10	•RIB ASSY - STBD WING SLATTED LE STA 76	371-	1
	227-14434-5	•STIFFENER - PORT WING SIDE ROLLER FORWARD BACK-UP LEADING EDGE STA 74	371-	1
	227-14434-6	•STIFFENER - STBD WING SIDE ROLLER FORWARD BACK-UP LEADING EDGE STA 74	371-	1
-12	227-14434-3	•STIFFENER - PORT WING SIDE ROLLER FORWARD BACK-UP LEADING EDGE STA 76	371-	1
	227-14434-4	•STIFFENER - STBD WING SIDE ROLLER FORWARD BACK-UP LEADING EDGE STA 76	371-	1
	227-14443-2	•CLIP - SIDE ROLLER FORWARD BACK-UP LEADING EDGE STA 74 RH (PORT WING)	371-	1
	227-14443-1	•CLIP - SIDE ROLLER FORWARD BACK-UP LEADING EDGE STA 74 LH (STARBOARD WING)	371-	1
	227-14443-1	•CLIP - SIDE ROLLER FORWARD BACK-UP LEADING EDGE STA 76 RH (PORT WING)	371-	1
	227-14443-2	•CLIP - SIDE ROLLER FORWARD BACK-UP LEADING EDGE STA 76 RH (STARBOARD WING)	371-	1
	227-14437-1	•STIFFENER - PORT WING SIDE ROLLER REAR BACK-UP LEADING EDGE STA 74	371-	1
	227-14437-2	•STIFFENER - STBD WING SIDE ROLLER REAR BACK-UP LEADING EDGE STA 74	371-	1
-13	227-14438-1	•STIFFENER - PORT WING SIDE ROLLER REAR BACK-UP LEADING EDGE STA 76	371-	1
	227-14438-2	•STIFFENER - STBD WING SIDE ROLLER REAR BACK-UP LEADING EDGE STA 76	371-	1
	227-14446-1	•CLIP - PORT WING SIDE ROLLER REAR BACK-UP LEADING EDGE STA 76	371-	1
	227-14446-2	•CLIP - STBD WING SIDE ROLLER REAR BACK-UP LEADING EDGE STA 76	371-	1
	151-14536-5	•STIFFENER - WING O/PNL LEADING EDGE STA 74	371-	1
	NAS221-10	•SCREW - (STIFFENER ATTACHING)	371-	4
	2W18-10	•WASHER - FLAT (NAA)	371-	4
	AN365-1032	•NUT -	371-	4
	151-14536-7	•STIFFENER - WING O/PNL LEADING EDGE STA 76	371-	1
	NAS221-10	•SCREW - (STIFFENER ATTACHING)	371-	4
	2W18-10	•WASHER - FLAT (NAA)	371-	4
	AN365-1032	•NUT -	371-	4
	227-14381-1	•DOUBLER - PORT WOP SLATTED LE STA 74-76	371-	1
	227-14381-2	•DOUBLER - STBD WOP SLATTED LE STA 74-76	371-	1
-14	202-14826-11	•RIB ASSY - PORT WING SLATTED LE STA 86	371-	1
	202-14826-12	•RIB ASSY - STBD WING SLATTED LE STA 86	371-	1
	151-14240-13	•STIFFENER - SLATTED LEADING EDGE STA 86	371-	1
	NAS221-10	•SCREW - (STIFFENER ATTACHING)	371-	2

FIGURE AND INDEX NUMBER	GROUP WING MAJOR ASSEMBLY OUTER WING SLATTED LEADING EDGE STRUCTURE PART NUMBER	1234567 NOMENCLATURE	CODE	UNITS PER ASSY
19 -	2W18-10	•WASHER - FLAT (NAA)	371-	2
	AN365-1032	•NUT -	371-	2
-15	202-14826-13	•RIB ASSY - PORT WING SLATTED LE STA 96	371-	1
	202-14826-14	•RIB ASSY - STBD WING SLATTED LE STA 96	371-	1
	202-14826-15	•RIB ASSY - PORT WING SLATTED LE STA 99	371-	1
	202-14826-16	•RIB ASSY - STBD WING SLATTED LE STA 99	371-	1
-16	151-14239-11	•STIFFENER - PORT WING SLATTED LEADING EDGE TRACK RIB STA 96	371-	1
	151-14239-12	•STIFFENER - STBD WING SLATTED LEADING EDGE TRACK RIB STA 96	371-	1
	NAS221-13	•SCREW - (STIFFENER ATTACHING)	371-	4
	2W18-10	•WASHER - FLAT (NAA)	371-	4
	AN365-1032	•NUT -	371-	4
	151-14239-7	•STIFFENER - PORT WING SLATTED LEADING EDGE TRACK RIB STA 99	371-	1
	151-14239-8	•STIFFENER - STBD WING SLATTED LEADING EDGE TRACK RIB STA 99	371-	1
	NAS221-13	•SCREW - (STIFFENER ATTACHING)	371-	4
	2W18-10	•WASHER - FLAT (NAA)	371-	4
	AN365-1032	•NUT -	371-	4
	227-14382-1	•DOUBLER - PORT WOP SLATTED LE STA 96-99	371-	1
	227-14382-2	•DOUBLER - STBD WOP SLATTED LE STA 96-99	371-	1
-17	202-14826-17	•RIB ASSY - PORT WING SLATTED LE STA 109	371-	1
	202-14826-18	•RIB ASSY - STBD WING SLATTED LE STA 109	371-	1
	140-48207	•FAIRLEAD - DROP TANK FUEL LINE WING STA 108 (INSTALLED ON 202-14826-17 & -18 RIB)	371-	1
	151-14240-3	•STIFFENER - SLATTED LEADING EDGE STA 109	371-	1
	AN509-10R10	•SCREW - (STIFFENER ATTACHING)	371-	1
	NAS221-10	•SCREW - (STIFFENER ATTACHING)	371-	1
	2W18-10	•WASHER - FLAT (NAA)	371-	2
	AN365-1032	•NUT -	371-	2
-18	202-14826-19	•RIB ASSY - PORT WING SLATTED LE STA 117	371-	1
	202-14826-20	•RIB ASSY - STBD WING SLATTED LE STA 117	371-	1
	151-14240-11	•STIFFENER - SLATTED LEADING EDGE STA 117	371-	1
	NAS221-10	•SCREW - (STIFFENER ATTACHING)	371-	2
	2W18-10	•WASHER - FLAT (NAA)	371-	2
	AN365-1032	•NUT -	371-	2
	13B-13007-200	•SPACER - WING EXTN SLATTED LE (STA 118)	371-	2
-19	202-14826-21	•RIB ASSY - PORT WING SLATTED LE STA 129	371-	1
	202-14826-22	•RIB ASSY - STBD WING SLATTED LE STA 129	371-	1
-20	13B-13007-25	•STRINGER - PORT LEADING EDGE INBD LWR REAR WING STA 38 TO LEADING EDGE STA 74	371-	1
	13B-13007-26	•STRINGER - STARBOARD LE INBOARD LOWER REAR WING STA 38 TO LEADING EDGE STA 74	371-	1
-21	13B-13007-23	•STRINGER - PORT LE INBD LWR FORWARD WING CANTED STA 38-66	371-	1
	13B-13007-24	•STRINGER - STBD LE INBD LWR FORWARD WING CANTED STA 38-66	371-	1
-22	13B-13007-135	•STRINGER - PORT WING LE STA 86-109	371-	1
	13B-13007-136	•STRINGER - STARBOARD WING LE STA 86-109	371-	1
-23	13B-13007-27	•STRINGER - PORT WING LE STA 117-131	371-	1
	13B-13007-28	•STRINGER - STARBOARD WING LE STA 117-131	371-	1
	13B-13007-29	•STRINGER - PORT WING LE STA 129-145	371-	1
	13B-13007-30	•STRINGER - STARBOARD WING LE STA 129-145	371-	1
-24	140-14014-5	•JOINT - PORT WOP LE FWD SPAR INBOARD UPPER	371-	1
	140-14014-6	•JOINT - STBD WOP LE FWD SPAR INBOARD UPPER	371-	1
-25	151-14545-5	•JOINT - PORT WOP LE FWD SPAR INBOARD LOWER	371-	1
	151-14545-6	•JOINT - STBD WOP LE FWD SPAR INBOARD LOWER	371-	1
-26	13B-13007-7	•SKIN - PORT WING LE INBOARD STA 38-50	371-	1

FIGURE AND INDEX NUMBER	GROUP / MAJOR ASSEMBLY / PART NUMBER	WING / OUTER WING SLATTED LEADING EDGE STRUCTURE / 1234567 NOMENCLATURE	CODE	UNITS PER ASSY
19 -	13B-13007-8	•SKIN - STARBOARD WING LE INBOARD STA 38-50	371-	1
-27	13B-13007-11	•SKIN - PORT WING LEADING EDGE CENTRE UPPER	371-	1
	13B-13007-12	•SKIN - STARBOARD WING LE CENTRE UPPER	371-	1
-28	13B-13007-5	•SKIN - PORT WING LE STA 50 CANTED TO 130	371-	1
	13B-13007-6	•SKIN - STBD WING LE STA 50 CANTED TO 130	371-	1
-29	13B-13007-35	•STRIP - PORT WING LEADING EDGE RUBBING STA 50 CANTED TO 130	371-	1
	13B-13007-36	•STRIP - STBD WING LEADING EDGE RUBBING STA 50 CANTED TO 130	371-	1
-30	13B-13007-15	•SKIN - PORT WING LEADING EDGE STA 50 CANTED TO 130 LOWER	371-	1
	13B-13007-16	•SKIN - STARBOARD WING LEADING EDGE STA 50 CANTED TO 130 LOWER	371-	1
	2J-1	•JACK ASSY - FUEL NOZZLE GROUNDING (NAA)	371-	1
	191-14242-5	•DOUBLER ASSY - PORT WOP LEADING EDGE STA 81 ACCESS DOOR	371-	1
	191-14242-6	•DOUBLER ASSY - STARBOARD WOP LEADING EDGE STA 81 ACCESS DOOR	371-	1
-31	13B-64012-1	•BASE-PLATE - DROP FUEL TANK & AIR LINE DISC. FITTING (PORT WING)	371-	1
	13B-64012-2	•BASE-PLATE - DROP FUEL TANK & AIR LINE DISC. FITTING (STARBOARD WING)	371-	1
	13B-13007-321	•PIN ASSY - LEFT HAND DROP TANK		1
	13B-13007-322	•PIN ASSY - RIGHT HAND DROP TANK		1
-32	13B-13007-243	•DOOR - WING EXTN LE ELEC PLUG ACCESS	371-	1
	AN509-8R8	•SCREW - (DOOR ATTACHING)	371-	8
-33	170-14691-1	•COVER - PORT WOP LE ELEC JACK ACCESS HOLE	371-	4
	170-14691-2	•COVER - STBD WOP LE ELEC JACK ACCESS HOLE	371-	4
-34	7S13-1032-13	•SCREW - CORROSION-RESISTANT RD/HD (NAA)	371-	4
-35	157-318101	•SPRING - SEAL INFLATION PLUNGER	371-	4
	2W1AL13-16-64	•WASHER - PLAIN (NAA)	371-	4
	AN310-3	•NUT -	371-	4
	AN380-2-2	•COTTER-PIN -	371-	4
	191-14230-1	•BRACKET - PORT WOP INTER ELEC RECP MTG	371-	1
	191-14230-2	•BRACKET - STBD WOP INTER ELEC RECP MTG	371-	1
-36	191-14261-5	•ANGLE ASSY - PORT WOP EXTN REMOVABLE LE OR	371-	1
	191-14261-801	•ANGLE ASSY - PORT WOP EXTN REMOVABLE LE	371-	
	191-14261-6	•ANGLE ASSY - STBD WOP EXTN REMOVABLE LE OR	371-	1
	191-14261-802	•ANGLE ASSY - STBD WOP EXTN REMOVABLE LE	371-	
-37		•DELETED		
	191-14262-805	•BRACKET ASSY - EXTENDED REMOVABLE LE LOCK (AS PER EO 05-5E-6A/160)	371-736	1
	191-14262-801	•BRACKET ASSY - EXTENDED REMOVABLE LE LOCK	737-	1
	13B-13026-1	•WEDGE ASSY - WOP EXTENDED INBOARD PORT (AS PER EO 05-5E-6A/160)	737-	1
	13B-13026-2	•WEDGE ASSY - WOP EXTENDED INBOARD STBD (AS PER EO 05-5E-6A/160)	737-	1
-38	13B-13026-7	••RIB - PORT WOP EXTENDED WEDGE	737-	1
	13B-13026-8	••RIB - STARBOARD WOP EXTENDED WEDGE	737-	1
	13B-13026-5	••INTERCOSTAL - PORT WOP EXTENDED WEDGE	737-	1
	13B-13026-6	••INTERCOSTAL - STBD WOP EXTENDED WEDGE	737-	1
	13B-13026-9	••STIFFENER - PORT WEDGE INTERCOSTAL	737-	1
	13B-13026-10	••STIFFENER - STARBOARD WEDGE INTERCOSTAL	737-	1
-39	191-14261-1	••ANGLE - PORT WOP EXTENDED REMOVABLE LE	737-	1
	191-14261-2	••ANGLE - STBD WOP EXTENDED REMOVABLE LE	737-	1
-40	191-14236	••SEAL - WOP EXTENDED REM LEADING EDGE INBD	737-	1
-41	13B-13026-3	••SKIN - PORT WING O/PNL EXTENDED WEDGE	737-	1
	13B-13026-4	••SKIN - STARBOARD WOP EXTENDED WEDGE	737-	1
-42	AN4-5A	•BOLT - (WEDGE ATTACHING) (AS PER EO 05-5E-6A/160)	737-	1
	AN960C416	•WASHER -	737-	1
-43	13B-13025-1	LEADING EDGE ASSY - PORT WOP EXTN INBOARD (REMOVABLE) (SEE SECTION 1)		REF

FIGURE AND INDEX NUMBER	GROUP / MAJOR ASSEMBLY / PART NUMBER	WING / OUTER WING SLATTED LEADING EDGE STRUCTURE / 1234567 NOMENCLATURE	CODE	UNITS PER ASSY
19 -44	191-14244-11	DOOR ASSY - PORT WOP EXTENDED LE LINE ACC (SEE FIG. 7) (CONTINUED SEE FIG. 19A)		REF

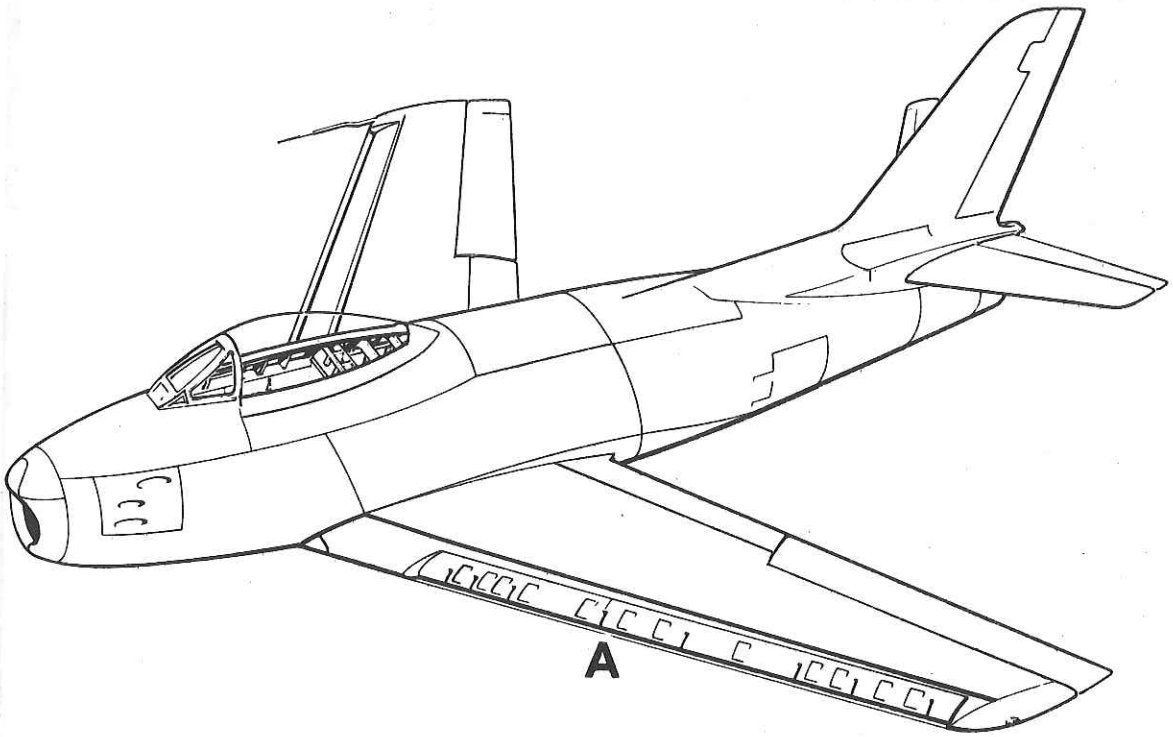

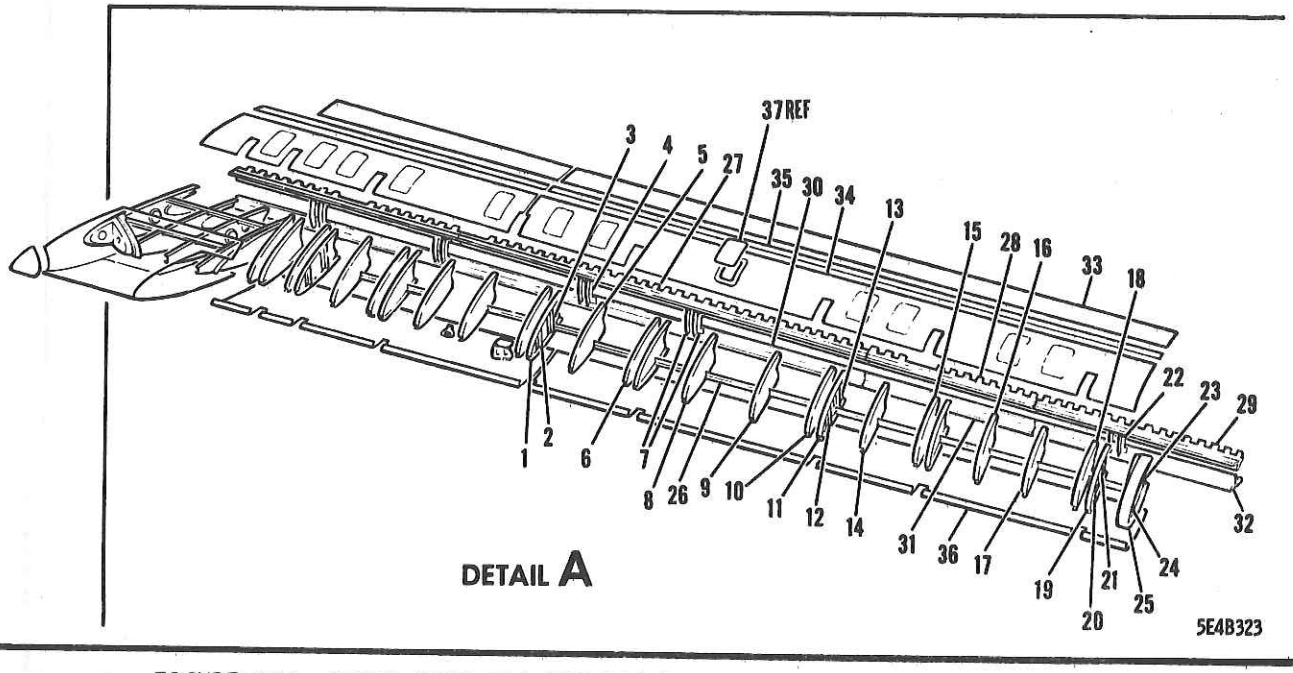

FIGURE 19A OUTER WING STA 130-248 SLATTED LEADING EDGE STRUCTURE
(EFFECTIVE AIRCRAFT 23371 & SUBS)

FIGURE AND INDEX NUMBER	GROUP WING MAJOR ASSEMBLY OUTER WING SLATTED LEADING EDGE STRUCTURE PART NUMBER	1234567 NOMENCLATURE	CODE	UNITS PER ASSY
19A-	13B-13007-1	LEADING EDGE ASSY - PORT WING EXTENDED SLATTED (SEE FIG. 18)		REF
	13B-13007-2	LEADING EDGE ASSY - STARBOARD WING EXTENDED SLATTED (SEE FIG. 18)		REF
- 1	202-14826-23	•RIB ASSY - PORT WING SLATTED LE STA 131	371-	1
	202-14826-24	•RIB ASSY - STBD WING SLATTED LE STA 131	371-	1
	227-14449-2	•STIFFENER - SIDE ROLLER FORWARD BACK-UP LE STA 129 RH (PORT WING)	371-	1
	227-14449-1	•STIFFENER - SIDE ROLLER FORWARD BACK-UP LE STA 129 LH (STARBOARD WING)	371-	1
- 2	227-14449-1	•STIFFENER - SIDE ROLLER FORWARD BACK-UP LE STA 131 LH (PORT WING)	371-	1
	227-14449-2	•STIFFENER - SIDE ROLLER FORWARD BACK-UP LE STA 131 RH (STARBOARD WING)	371-	1
	227-14444-2	•CLIP - SIDE ROLLER FORWARD BACK-UP LE STA 129 RH (PORT WING)	371-	1
	227-14444-1	•CLIP - SIDE ROLLER FORWARD BACK-UP LE STA 129 LH (STARBOARD WING)	371-	1
	227-14444-1	•CLIP - SIDE ROLLER FORWARD BACK-UP LE STA 131 LH (PORT WING)	371-	1
	227-14444-2	•CLIP - SIDE ROLLER FORWARD BACK-UP LE STA 131 RH (STARBOARD WING)	371-	1
	9E1-1-12	•EXTRUSION - PLASTIC (NAA)	650-	2
	227-14439-1	•STIFFENER - PORT WING SIDE ROLLER REAR BACK-UP LEADING EDGE STA 129	371-	1
	227-14439-2	•STIFFENER - STBD WING SIDE ROLLER REAR BACK-UP LEADING EDGE STA 129	371-	1
- 3	227-14440-1	•STIFFENER - PORT WING SIDE ROLLER REAR BACK-UP LEADING EDGE STA 131	371-	1
	227-14440-2	•STIFFENER - STBD WING SIDE ROLLER REAR BACK-UP LEADING EDGE STA 131	371-	1
	9E1-1-12	•EXTRUSION - PLASTIC (NAA)	650-	2
- 4	227-14238-1	•STIFFENER - WOP EXTENDED SLATTED LEADING EDGE STA 129 LH (PORT WING)	371-	1
	227-14238-2	•STIFFENER - WOP EXTENDED SLATTED LEADING EDGE STA 129 RH (STARBOARD WING)	371-	1
	NAS221-10	•SCREW - (STIFFENER ATTACHING)	371-	4
	2W18-10	•WASHER - FLAT (NAA)	371-	4
	AN365-1032	•NUT -	371-	4
	227-14238-2	•STIFFENER - WOP EXTENDED SLATTED LEADING EDGE STA 131 RH (PORT WING)	371-	1
	227-14238-1	•STIFFENER - WOP EXTENDED SLATTED LEADING EDGE STA 131 RH (STARBOARD WING)	371-	1
	NAS221-10	•SCREW - (STIFFENER ATTACHING)	371-	4
	2W18-10	•WASHER - FLAT (NAA)	371-	4
	AN365-1032	•NUT -	371-	4
	227-14383-3	•DOUBLER - PORT WOP SLATTED LE STA 129-131	371-	1
	227-14383-4	•DOUBLER - STBD WOP SLATTED LE STA 129-131	371-	1
- 5	202-14826-75	•RIB - PORT WING SLATTED LE STA 145	371-	1
	202-14826-76	•RIB - STARBOARD WING SLATTED LE STA 145	371-	1
	151-14240-7	•STIFFENER - SLATTED LEADING EDGE STA 145	371-	1
	NAS221-10	•SCREW - (STIFFENER ATTACHING)	371-	2
	2W18-10	•WASHER - FLAT (NAA)	371-	2
	AN365-1032	•NUT -	371-	2
- 6	202-14826-77	•RIB - PORT WING SLATTED LE STA 153	371-	1
	202-14826-78	•RIB - STARBOARD WING SLATTED LE STA 153	371-	1
	202-14826-29	•RIB ASSY - PORT WING SLATTED LE STA 156	371-	1
	202-14826-30	•RIB ASSY - STBD WING SLATTED LE STA 156	371-	1
- 7	227-14239	•STIFFENER - WOP SLATTED LE STA 153 & 156	371-	2
	NAS221-10	•SCREW - (STIFFENER ATTACHING)	371-	8

FIGURE AND INDEX NUMBER	GROUP WING MAJOR ASSEMBLY OUTER WING SLATTED LEADING EDGE STRUCTURE PART NUMBER	1234567 NOMENCLATURE	CODE	UNITS PER ASSY
19A-	2W18-10	•WASHER - FLAT (NAA)	371-	8
	AN365-1032	•NUT -	371-	8
	227-14383-3	•DOUBLER - PORT WOP SLATTED LE STA 153-156	371-	1
	227-14383-4	•DOUBLER - STBD WOP SLATTED LE STA 153-156	371-	1
- 8	202-14826-31	•RIB - PORT WING SLATTED LE STA 165	371-	1
	202-14826-32	•RIB - STARBOARD WING SLATTED LE STA 165	371-	1
	151-14240-9	•STIFFENER - SLATTED LEADING EDGE STA 165	371-	1
	NAS221-10	•SCREW - (STIFFENER ATTACHING)	371-	2
	2W18-10	•WASHER - FLAT (NAA)	371-	2
	AN365-1032	•NUT -	371-	2
- 9	202-14826-33	•RIB - PORT WING SLATTED LE STA 174	371-	1
	202-14826-34	•RIB - STARBOARD WING SLATTED LE STA 174	371-	1
	151-14240-5	•STIFFENER - SLATTED LEADING EDGE STA 174	371-	1
	NAS221-10	•SCREW - (STIFFENER ATTACHING)	371-	2
	2W18-10	•WASHER - FLAT (NAA)	371-	2
	AN365-1032	•NUT -	371-	2
-10	202-14826-35	•RIB ASSY - PORT WING SLATTED LE STA 184	371-	1
	202-14826-36	•RIB ASSY - STBD WING SLATTED LE STA 184	371-	1
-11	202-14826-37	•RIB ASSY - PORT WING SLATTED LE STA 186	371-	1
	202-14826-38	•RIB ASSY - STBD WING SLATTED LE STA 186	371-	1
	227-14435-5	•STIFFENER - PORT WING SIDE ROLLER FORWARD BACK-UP LEADING EDGE STA 184	371-	1
	227-14435-6	•STIFFENER - STBD WING SIDE ROLLER FORWARD BACK-UP LEADING EDGE STA 184	371-	1
-12	227-14435-3	•STIFFENER - PORT WING SIDE ROLLER FORWARD BACK-UP LEADING EDGE STA 186	371-	1
	227-14435-4	•STIFFENER - STBD WING SIDE ROLLER FORWARD BACK-UP LEADING EDGE STA 186	371-	1
	227-14445-1	•CLIP - SIDE ROLLER FORWARD BACK-UP LEADING EDGE STA 184 LH (PORT WING)	371-	1
	227-14445-2	•CLIP - SIDE ROLLER FORWARD BACK-UP LEADING EDGE STA 184 RH (STARBOARD WING)	371-	1
	227-14445-2	•CLIP - SIDE ROLLER FORWARD BACK-UP LEADING EDGE STA 186 RH (PORT WING)	371-	1
	227-14445-1	•CLIP - SIDE ROLLER FORWARD BACK-UP LEADING EDGE STA 186 LH (STARBOARD WING)	371-	1
	227-14448-2	•STIFFENER - SIDE ROLLER REAR BACK-UP LE STA 184 RH (PORT WING)	371-	1
	227-14448-1	•STIFFENER - SIDE ROLLER REAR BACK-UP LE STA 184 LH (STARBOARD WING)	371-	1
-13	227-14448-1	•STIFFENER - SIDE ROLLER REAR BACK-UP LE STA 186 LH (PORT WING)	371-	1
	227-14448-2	•STIFFENER - SIDE ROLLER REAR BACK-UP LE STA 184 RH (STARBOARD WING)	371-	1
	227-14447-2	•CLIP - SIDE ROLLER REAR BACK-UP LEADING EDGE STA 184 RH (PORT WING)	371-	1
	227-14447-1	•CLIP - SIDE ROLLER REAR BACK-UP LEADING EDGE STA 184 LH (STARBOARD WING)	371-	1
	227-14447-1	•CLIP - SIDE ROLLER REAR BACK-UP LEADING EDGE STA 186 LH (PORT WING)	371-	1
	227-14447-2	•CLIP - SIDE ROLLER REAR BACK-UP LEADING EDGE STA 186 RH (STARBOARD WING)	371-	1
	227-14424-1	•STIFFENER - WOP SLATTED LEADING EDGE RIB STA 184 LH (PORT WING)	371-	1
	227-14424-2	•STIFFENER - WOP SLATTED LEADING EDGE RIB STA 184 RH (STARBOARD WING)	371-	1
	NAS221-12	•SCREW - (STIFFENER ATTACHING)	371-	4
	2W18-10	•WASHER - FLAT (NAA)	371-	4
	AN365-1032	•NUT -	371-	4
	227-14424-2	•STIFFENER - WOP SLATTED LEADING EDGE RIB STA 186 RH (PORT WING)	371-	1

FIGURE AND INDEX NUMBER	GROUP WING MAJOR ASSEMBLY OUTER WING SLATTED LEADING EDGE STRUCTURE PART NUMBER	1234567 NOMENCLATURE	CODE	UNITS PER ASSY
19A-	227-14424-1	•STIFFENER - WOP SLATTED LEADING EDGE RIB STA 186 LH (STARBOARD WING)	371-	1
	NAS221-12	•SCREW - (STIFFENER ATTACHING)	371-	4
	2W18-10	•WASHER - FLAT (NAA)	371-	4
	AN365-1032	•NUT -	371-	4
-14	202-14826-39	•RIB - PORT WING SLATTED LE STA 197	371-	1
	202-14826-40	•RIB - STARBOARD WING SLATTED LE STA 197	371-	1
	170-14424-3	•STIFFENER - SLATTED LEADING EDGE STA 197	371-	1
	NAS221-10	•SCREW - (STIFFENER ATTACHING)	371-	2
	2W18-10	•WASHER - FLAT (NAA)	371-	2
	AN365-1032	•NUT -	371-	2
-15	202-14826-41	•RIB - PORT WING SLATTED LE STA 208	371-611	1
	202-14826-957	•RIB - PORT WING SLATTED LE STA 208	612-	1
	202-14826-42	•RIB - STARBOARD WING SLATTED LE STA 208	371-611	1
	202-14826-958	•RIB - STARBOARD WING SLATTED LE STA 208	612-	1
	202-14826-43	•RIB ASSY - PORT WING SLATTED LE STA 211	371-	1
	202-14826-44	•RIB ASSY - STBD WING SLATTED LE STA 211	371-	1
	227-14423-1	•STIFFENER - WOP SLATTED LEADING EDGE STA 208 LH (PORT WING)	371-	1
	227-14423-2	•STIFFENER - WOP SLATTED LEADING EDGE STA 208 RH (STARBOARD WING)	371-	1
	NAS221-10	•SCREW - (STIFFENER ATTACHING)	371-	4
	2W18-10	•WASHER - FLAT (NAA)	371-	4
	AN365-1032	•NUT -	371-	4
	227-14423-2	•STIFFENER - WOP SLATTED LEADING EDGE STA 211 RH (PORT WING)	371-	1
	227-14423-1	•STIFFENER - WOP SLATTED LEADING EDGE STA 211 LH (STARBOARD WING)	371-	1
	NAS221-10	•SCREW - (STIFFENER ATTACHING)	371-	4
	2W18-10	•WASHER - FLAT (NAA)	371-	4
	AN365-1032	•NUT -	371-	4
	227-14383-801	•DOUBLER - PORT WOP SLATTED LE STA 208-211	371-	1
	227-14383-802	•DOUBLER - STBD WOP SLATTED LE STA 208-211	371-	1
-16	202-14826-45	•RIB - PORT WING SLATTED LE STA 240	371-	1
	202-14826-46	•RIB - STARBOARD WING SLATTED LE STA 240	371-	1
	170-14421-3	•STIFFENER - PORT WING SLATTED LE STA 218	371-	1
	170-14421-4	•STIFFENER - STBD WING SLATTED LE STA 218	371-	1
	NAS221-10	•SCREW - (STIFFENER ATTACHING)	371-	2
	2W18-10	•WASHER - FLAT (NAA)	371-	2
	AN365-1032	•NUT -	371-	2
-17	202-14826-955	•RIB - PORT WING SLATTED LE STA 229	371-	1
	202-14826-956	•RIB - STARBOARD WING SLATTED LE STA 229	371-	1
	151-14237-5	•STIFFENER - SLATTED LEADING EDGE STA 229	371-	1
	NAS221-10	•SCREW - (STIFFENER ATTACHING)	371-	2
	2W18-10	•WASHER - FLAT (NAA)	371-	2
	AN365-1032	•NUT -	371-	2
-18	202-14826-49	•RIB - PORT WING SLATTED LE STA 238	371-	1
	202-14826-50	•RIB - STARBOARD WING SLATTED LE STA 238	371-	1
-19	202-14826-51	•RIB ASSY - PORT WING SLATTED LE STA 241	371-	1
	202-14826-52	•RIB ASSY - STBD WING SLATTED LE STA 241	371-	1
	227-14436-2	•STIFFENER - SIDE ROLLER FORWARD BACK-UP LE STA 238 RH (PORT WING)	371-	1
	227-14436-1	•STIFFENER - SIDE ROLLER FORWARD BACK-UP LE STA 238 LH (STARBOARD WING)	371-	1
-20	227-14436-1	•STIFFENER - SIDE ROLLER FORWARD BACK-UP LE STA 241 LH (PORT WING)	371-	1
	227-14436-2	•STIFFENER - SIDE ROLLER FORWARD BACK-UP LE STA 241 RH (STARBOARD WING)	371-	1
	227-14445-1	•CLIP - SIDE ROLLER FORWARD BACK-UP LEADING EDGE STA 238 LH (PORT SIDE)	371-	1

FIGURE AND INDEX NUMBER	GROUP WING MAJOR ASSEMBLY OUTER WING SLATTED LEADING EDGE STRUCTURE PART NUMBER	1234567 NOMENCLATURE	CODE	UNITS PER ASSY
19A-	227-14445-2	•CLIP - SIDE ROLLER FORWARD BACK-UP LEADING EDGE STA 238 RH (STARBOARD WING)	371-	1
	227-14445-2	•CLIP - SIDE ROLLER FORWARD BACK-UP LEADING EDGE STA 241 RH (PORT WING)	371-	1
	227-14445-1	•CLIP - SIDE ROLLER FORWARD BACK-UP LEADING EDGE STA 241 LH (STARBOARD WING)	371-	1
	227-14441-5	•STIFFENER - PORT WING SIDE ROLLER REAR BACK-UP LEADING EDGE STA 238	371-	1
	227-14441-6	•STIFFENER - STBD WING SIDE ROLLER REAR BACK-UP LEADING EDGE STA 238	371-	1
-21	227-14441-3	•STIFFENER - PORT WING SIDE ROLLER REAR BACK-UP LEADING EDGE STA 241	371-	1
	227-14441-4	•STIFFENER - STBD WING SIDE ROLLER REAR BACK-UP LEADING EDGE STA 241	371-	1
	227-14447-2	•CLIP - SIDE ROLLER REAR BACK-UP LEADING EDGE STA 238 RH (PORT WING)	371-	1
	227-14447-1	•CLIP - SIDE ROLLER REAR BACK-UP LEADING EDGE STA 238 LH (STARBOARD WING)	371-	1
	227-14447-1	•CLIP - SIDE ROLLER REAR BACK-UP LEADING EDGE STA 241 LH (PORT WING)	371-	1
	227-14447-2	•CLIP - SIDE ROLLER REAR BACK-UP LEADING EDGE STA 241 RH (STARBOARD WING)	371-	1
	227-14832-6	•STIFFENER - WOP EXTENDED SLATTED LEADING EDGE STA 238 RH (PORT WING)	371-	1
	227-14832-5	•STIFFENER - WOP EXTENDED SLATTED LEADING EDGE STA 238 LH (STARBOARD SIDE)	371-	1
	NAS221-10	•SCREW - (STIFFENER ATTACHING)	371-	4
	2W18-10	•WASHER - FLAT (NAA)	371-	4
	AN365-1032	•NUT -	371-	4
-22	227-14832-3	•STIFFENER - PORT WOP EXTENDED SLATTED LEADING EDGE STA 241	371-	1
	227-14832-4	•STIFFENER - STBD WOP EXTENDED SLATTED LEADING EDGE STA 241	371-	1
	NAS221-10	•SCREW - (STIFFENER ATTACHING)	371-	4
	2W18-10	•WASHER - FLAT (NAA)	371-	4
	AN365-1032	•NUT -	371-	4
	227-14383-9	•DOUBLER - PORT WOP SLATTED LE STA 238-241	371-	1
	227-14383-10	•DOUBLER - STBD WOP SLATTED LE STA 238-241	371-	1
-23	13B-13011-1	•RIB ASSY - PORT WING SLATTED LEADING EDGE STA 248 OUTBOARD	371-	1
	13B-13011-2	•RIB ASSY - STARBOARD WING SLATTED LEADING EDGE STA 248 OUTBOARD	371-	1
-24	227-14616	••FITTING - WOP EXTENDED LEADING EDGE TO 12-IN. EXTENDED WING TIP INBOARD	371-	1
	7S16-10-10	••SCREW - 100-DEG CRE ROUNDHEAD (NAA)	371-	3
	2W18-10	••WASHER - FLAT (NAA)	371-	3
	AN365-1032	••NUT -	371-	3
	5W1-6-16-0	••SEAL - WEATHER (NAA)	371-	2
	13B-13011-31	••RETAINER - PORT WING SLATTED LE SEAL	371-	1
	13B-13011-32	••RETAINER - STARBOARD WING SLATTED LE SEAL	371-	1
	13B-13011-33	••RETAINER - PORT WING SLATTED LE SEAL	371-	1
	13B-13011-34	••RETAINER - STARBOARD WING SLATTED LE SEAL	371-	1
-25	13B-13011-5	••SKIN - PORT WING SLATTED LEADING EDGE STA 248 OUTBOARD RIB	371-	1
	13B-13011-6	••SKIN - STBD WING SLATTED LEADING EDGE STA 248 OUTBOARD RIB	371-	1
-26	13B-13007-31	•STRINGER - PORT WING LE STA 145-249	371-	1
	13B-13007-32	•STRINGER - STARBOARD WING LE STA 145-249	371-	1
-27	151-14546-5	•JOINT - PORT WOP LE FWD SPAR CENTRE UPPER	371-	1
	151-14546-6	•JOINT - STBD WOP LE FWD SPAR CENTRE UPPER	371-	1

FIGURE AND INDEX NUMBER	GROUP WING MAJOR ASSEMBLY OUTER WING SLATTED LEADING EDGE STRUCTURE PART NUMBER	1234567 NOMENCLATURE	CODE	UNITS PER ASSY
19A-28	191-14548-5	•JOINT - PORT WOP LE FORWARD SPAR OUTBOARD UPPER STA 183-224	371-	1
	191-14548-6	•JOINT - STBD WOP LE FORWARD SPAR OUTBOARD UPPER STA 183-224	371-	1
-29	191-14548-951	•JOINT - PORT WOP LE FORWARD SPAR OUTBOARD UPPER STA 224-249	371-	1
	191-14548-952	•JOINT - STBD WOP LE FORWARD SPAR OUTBOARD UPPER STA 224-249	371-	1
	227-14811	•DECALCOMANIA - WOP SLAT ROLLER BOLT TORQUE	371-	8
-30	151-14547-5	•JOINT - PORT WOP LE FWD SPAR CENTRE LOWER	371-	1
	151-14547-6	•JOINT - STBD WOP LE FWD SPAR CENTRE LOWER	371-	1
-31	191-14549-5	•JOINT - PORT WOP LE FORWARD SPAR OUTBOARD LOWER STA 183-224	371-	1
	191-14549-6	•JOINT - STBD WOP LE FORWARD SPAR OUTBOARD LOWER STA 183-224	371-	1
-32	191-14549-951	•JOINT - PORT WOP LE FORWARD SPAR OUTBOARD LOWER STA 224-249	371-	1
	191-14549-952	•JOINT - STBD WOP LE FORWARD SPAR OUTBOARD LOWER STA 224-249	371-	1
-33	13B-13007-9	•SKIN - PORT WING LEADING EDGE OUTBOARD UP•	371-	1
	13B-13007-10	•SKIN - STARBOARD WING LE OUTBOARD UPPER	371-	1
-34	13B-13007-3	•SKIN - PORT WING LEADING EDGE STA 130-248	371-	1
	13B-13007-4	•SKIN - STARBOARD WING LE STA 130-248	371-	1
	227-14562	•DOUBLER ASSY - WOP EXTENDED SLAT LE ACCESS	371-691	12
	227-14562	•DOUBLER ASSY - WOP EXTENDED SLAT LE ACCESS	692-	11
	227-14562-803	•DOUBLER ASSY - WOP EXTENDED SLAT LE ACCESS (LEADING EDGE STA 108-117)	692-	1
	227-14564-1	•DOUBLER ASSY - PORT WOP EXTENDED SLAT ACCESS LEADING EDGE STA 145	371-	1
	227-14564-2	•DOUBLER ASSY - STBD WOP EXTENDED SLAT ACCESS LEADING EDGE STA 145	371-	1
	193-48222	•BRACKET ASSY - FUEL DROP TANK FUEL AIR IND	371-	1
	AN509-10R7	•SCREW - (BRACKET ATTACHING)	371-	3
	2W18-10M	•WASHER - FLAT (NAA)	371-	3
	AN365-1032	•NUT -	371-	3
-35	13B-13007-33	•STRIP - PORT WING LE RUBBING STA 138-248	371-	1
	13B-13007-34	•STRIP - STBD WING LE RUBBING STA 138-248	371-	1
-36	13B-13007-13	•SKIN - PORT WING LE STA 130-248 LOWER	371-	1
	13B-13007-14	•SKIN - STARBOARD WING LE STA 130-248 LOWER	371-	1
-37	227-14561	DOOR - WING OUTER PANEL EXTN SLATTED LE ACC (SEE FIG. 7)		REF
		-000-		

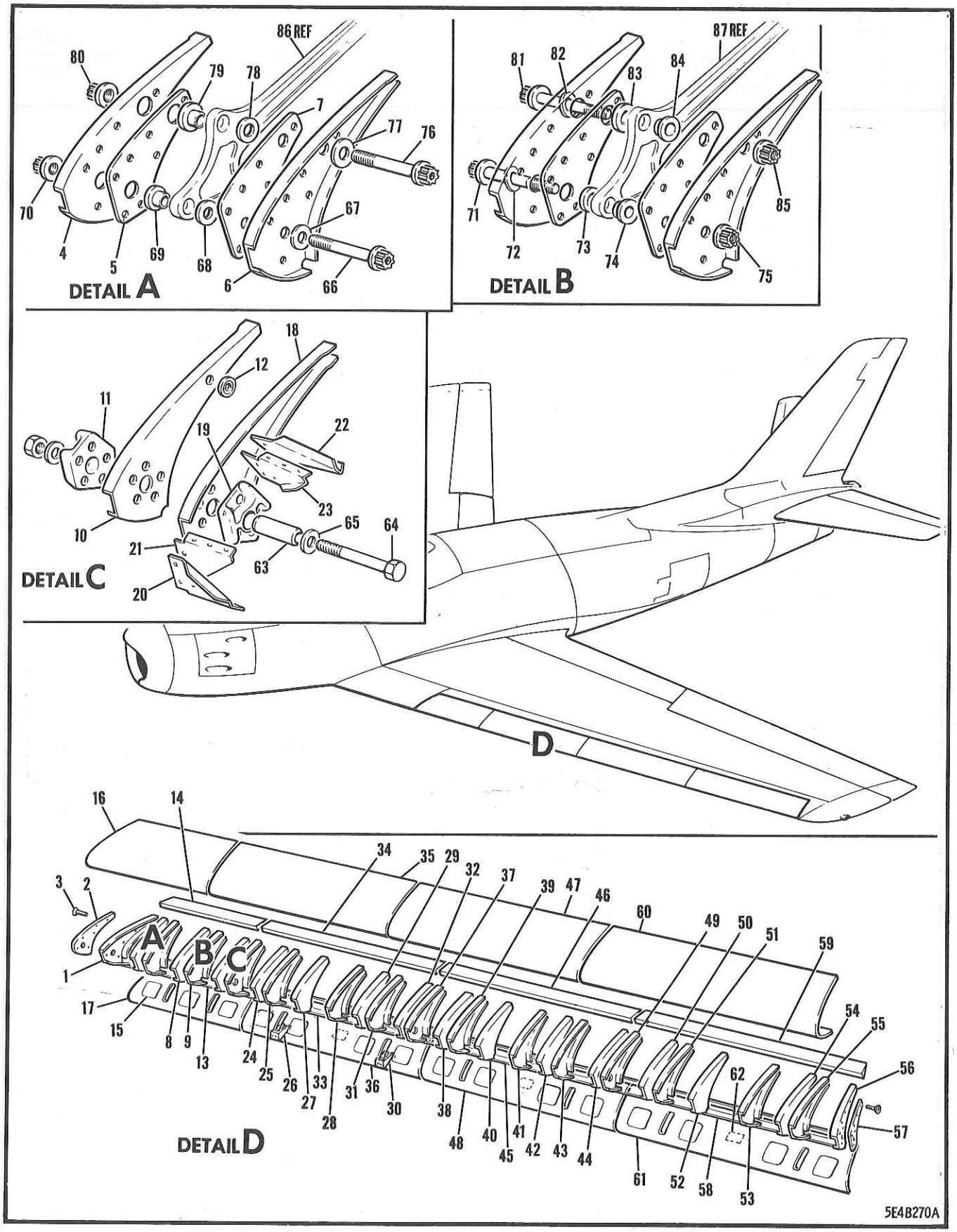

FIGURE 20 OUTER WING SLATS
(EFFECTIVE AIRCRAFT 23371 & SUBS)

FIGURE AND INDEX NUMBER	GROUP WING MAJOR ASSEMBLY OUTER WING SLATS PART NUMBER	1234567 NOMENCLATURE	CODE	UNITS PER ASSY
20 -	170-14001	WING ASSY - O/PNL COMPL PORT (SEE FIG. 6) (AS PER EO 05-5E-6B/9)	371-	REF
	13B-10010-1	•SLAT ASSY - PORT WING INBOARD	371-669	1
		OR		
	13B-10010-805	•SLAT ASSY - PORT WING INBOARD	371-669	
	13B-10010-805	•SLAT ASSY - PORT WING INBOARD	670-691	1
		OP		
	13B-10010-801	•SLAT ASSY - PORT WING INBOARD	371-691	
	13B-10010-801	•SLAT ASSY - PORT WING INBOARD	692-	1
	13B-10010-2	•SLAT ASSY - STARBOARD WING INBOARD	371-669	1
		OR		
	13B-10010-806	•SLAT ASSY - STARBOARD WING INBOARD	371-669	
	13B-10010-806	•SLAT ASSY - STARBOARD WING INBOARD	670-691	1
		OR		
	13B-10010-802	•SLAT ASSY - STARBOARD WING INBOARD	371-691	
	13B-10010-802	•SLAT ASSY - STARBOARD WING INBOARD	692-	1
- 1	13B-10010-19	••RIB - PORT WING INBOARD SLAT LE STA 46	371-691	1
	13B-10010-67	••RIB - PORT WING INBOARD SLAT LE STA 46	692-	1
	13B-10010-20	••RIB - STBD WING INBOARD SLAT LE STA 46	371-691	1
	13B-10010-68	••RIB - STBD WING INBOARD SLAT LE STA 46	692-	1
- 2	13B-10010-37	••PLATE - PORT WING INBOARD SLAT REINF	371-	1
	13B-10010-38	••PLATE - STARBOARD WING INBOARD SLAT REINF	371-	1
- 3	AN509-8R7	••SCREW - (PLATE ATTACHING)	371-	6
- 4	13B-10010-17	••RIB - PORT WING INBOARD SLAT STA 59	371-	1
	13B-10010-18	••RIB - STARBOARD WING INBOARD SLAT STA 59	371-	1
- 5	13B-10010-27	••DOUBLER - INBOARD SLAT	371-	1
	13B-10010-43	••SHIM - INBOARD SLAT	371-	4
- 6	13B-10010-15	••RIB - PORT WING INBOARD SLAT STA 61	371-	1
	13B-10010-16	••RIB - STARBOARD WING INBOARD SLAT STA 61	371-	1
- 7	13B-10010-25	••DOUBLER - INBOARD SLAT	371-	1
- 8	13B-10010-13	••RIB - PORT WING INBOARD SLAT STA 74	371-	1
	13B-10010-14	••RIB - STARBOARD WING INBOARD SLAT STA 74	371-	1
	13B-10010-23	••DOUBLER - INBOARD SLAT	371-	1
- 9	13B-10010-11	••RIB - PORT WING INBOARD SLAT STA 76	371-	1
	13B-10010-12	••RIB - STARBOARD WING INBOARD SLAT STA 76	371-	1
	13B-10010-21	••DOUBLER - INBOARD SLAT	371-	1
-10	13B-10010-9	••RIB - PORT WING INBOARD SLAT LE STA 86	371-691	1
	13B-10010-65	••RIB - PORT WING INBOARD SLAT LE STA 86	692-	1
	13B-10010-10	••RIB - STBD WING INBOARD SLAT LE STA 86	371-691	1
	13B-10010-66	••RIB - STBD WING INBOARD SLAT LE STA 86	692-	1
-11	13B-10014-3	••FITTING - PORT WING SLAT INTERCONNECTOR	371-	1
	13B-10014-4	••FITTING - STARBOARD WING SLAT INTERCONN	371-	1
	13B-10010-29	••CLIP - PORT WING INBOARD SLAT REINFORCING	371-	1
	13B-10010-30	••CLIP - STARBOARD WING INBOARD SLAT REINF	371-	1
	13B-10010-31	••CLIP - PORT WING INBOARD SLAT REINFORCING	371-	1
	13B-10010-32	••CLIP - STARBOARD WING INBOARD SLAT REINF	371-	1
	13B-10010-33	••CLIP - PORT WING INBOARD SLAT REINFORCING	371-	1
	13B-10010-34	••CLIP - STARBOARD WING INBOARD SLAT REINF	371-	1
	13B-10010-35	••CLIP - PORT WING INBOARD SLAT REINFORCING	371-	1
	13B-10010-36	••CLIP - STARBOARD WING INBOARD SLAT REINF	371-	1
-12	140-17115	••WASHER - WING SLAT BUMPER	371-746	1
	140-17115-801	••WASHER - WING SLAT BUMPER	747-	1
	AN507-1032R7	••SCREW - (BUMPER WASHER ATTACHING)	747-	1
-13	13B-10010-7	••ANGLE - PORT WING INBOARD SLAT	371-	1
	13B-10010-8	••ANGLE - STARBOARD WING INBOARD SLAT	371-	1
-14	13B-10010-39	••STRIP - PORT WING INBD SLAT TRAILING EDGE	371-	1
	13B-10010-40	••STRIP - STARBOARD WING INBOARD SLAT TE	371-	1
	13B-10010-41	••SHIM - INBOARD SLAT	371-	1
-15	13B-10021-1	••DOOR ASSY - WOP EXTENDED LEADING EDGE ACCESS (AS PER EO 05-5E-6A/144)	371-	3

FIGURE AND INDEX NUMBER	GROUP WING MAJOR ASSEMBLY OUTER WING SLATS PART NUMBER	1234567 NOMENCLATURE	CODE	UNITS PER ASSY
20 -	13B-10022-3	••DOUBLER - INBOARD SLAT LE STA 76-86 REINF	670-	1
	13B-10022-5	••DOUBLER - PORT WING INBOARD SLAT LE STA 46 TO 59 REINFORCEMENT	670-	1
	13B-10022-6	••DOUBLER - STBD WING INBOARD SLAT LE STA 46 TO 59 REINFORCEMENT	670-	1
	13B-10023-3	••DOUBLER - INBOARD SLAT LE STA 61-74 REINF	670-	1
	AN509-10R7	••SCREW - (DOOR ATTACHING)	371-669	48
	AN509-10R10	••SCREW - (DOOR ATTACHING)	670-	33
	AN509-10R10	••SCREW - (DOOR ATTACHING)	670-691	15
	AN509-10R11	••SCREW - (DOOR ATTACHING)	692-	15
	2C28	••CLIP - BALL CHAIN ATTACHING (NAA)	371-	3
-16	13B-10010-3	••SKIN - PORT WING INBOARD SLAT UPPER	371-	1
	13B-10010-4	••SKIN - STARBOARD WING INBOARD SLAT UPPER	371-	1
-17	13B-10010-5	••SKIN - PORT WING INBOARD SLAT LOWER	371-691	1
	13B-10010-63	••SKIN - PORT WING INBOARD SLAT LOWER	692-	1
	13B-10010-6	••SKIN - STARBOARD WING INBOARD SLAT LOWER	371-691	1
	13B-10010-64	••SKIN - STARBOARD WING INBOARD SLAT LOWER	692-	1
	AN7510-1	••PLATE -	371-	1
	13B-10011-1	•SLAT ASSY - PORT WING INBOARD CENTRE	371-669	1
		OR		
	13B-10011-803	•SLAT ASSY - PORT WING INBOARD CENTRE	371-669	
	13B-10011-803	•SLAT ASSY - PORT WING INBOARD CENTRE	670-691	1
		OR		
	13B-10011-801	•SLAT ASSY - PORT WING INBOARD CENTRE	371-691	
	13B-10011-801	•SLAT ASSY - PORT WING INBOARD CENTRE	692-	1
	13B-10011-2	•SLAT ASSY - STARBOARD WING INBOARD CENTRE	371-669	1
		OR		
	13B-10011-804	•SLAT ASSY - STARBOARD WING INBOARD CENTRE	371-669	
	13B-10011-804	•SLAT ASSY - STARBOARD WING INBOARD CENTRE	670-691	1
		OR		
	13B-10011-802	•SLAT ASSY - STARBOARD WING INBOARD CENTRE	371-691	
	13B-10011-802	•SLAT ASSY - STARBOARD WING INBOARD CENTRE	692-	1
-18	13B-10011-7	••RIB - PORT WING INBD CTR SLAT LE STA 87	371-691	1
	13B-10011-65	••RIB - PORT WING INBD CTR SLAT LE STA 87	692-	1
	13B-10011-8	••RIB - STBD WING INBD CTR SLAT LE STA 87	371-691	1
	13B-10011-66	••RIB - STBD WING INBD CTR SLAT LE STA 87	692-	1
-19	13B-10014-4	••FITTING - SLAT INTERCONN RH (PORT WING)	371-	1
	13B-10014-3	••FITTING - SLAT INTERCONN LH (STBD WING)	371-	1
-20	13B-10011-37	••CLIP - PORT WING INBOARD CTR SLAT REINF	371-	1
	13B-10011-38	••CLIP - STARBOARD WING INBD CTR SLAT REINF	371-	1
-21	13B-10011-39	••CLIP - PORT WING INBOARD CTR SLAT REINF	371-	1
	13B-10011-40	••CLIP - STARBOARD WING INBD CTR SLAT REINF	371-	1
-22	13B-10011-45	••CLIP - PORT WING INBOARD CTR SLAT REINF	371-	1
	13B-10011-46	••CLIP - STARBOARD WING INBD CTR SLAT REINF	371-	1
-23	13B-10011-47	••CLIP - PORT WING INBOARD CTR SLAT REINF	371-	1
	13B-10011-48	••CLIP - STARBOARD WING INBD CTR SLAT REINF	371-	1
	140-17115	••WASHER - WING SLAT BUMPER	371-746	2
	140-17115-801	••WASHER - WING SLAT BUMPER	747-	1
	AN507-1032R7	••SCREW - (BUMPER WASHER ATTACHING)	747-	1
-24	13B-10011-9	••RIB - PORT WING INBOARD CTR SLAT STA 96	371-	1
	13B-10011-10	••RIB - STARBOARD WING INBD CTR SLAT STA 96	371-	1
	13B-10011-27	••DOUBLER - INBOARD CENTRE SLAT	371-	1
-25	13B-10011-11	••RIB - PORT WING INBOARD CTR SLAT STA 98	371-	1
	13B-10011-12	••RIB - STARBOARD WING INBD CTR SLAT STA 98	371-	1
	13B-10011-25	••DOUBLER - INBOARD CENTRE SLAT	371-	1
-26	13B-10011-33	••SUPPORT - INBOARD CENTRE SLAT STA 97	371-	1
-27	13B-10011-13	••RIB - PORT WING INBOARD CTR SLAT STA 108	371-	1
	13B-10011-14	••RIB - STBD WING INBOARD CTR SLAT STA 108	371-	1
	13B-10011-55	••SHIM - INBOARD CENTRE SLAT	371-	4
-28	13B-10011-15	••RIB - PORT WING INBOARD CTR SLAT STA 118	371-	1

FIGURE AND INDEX NUMBER	GROUP WING MAJOR ASSEMBLY OUTER WING SLATS PART NUMBER	1234567 NOMENCLATURE	CODE	UNITS PER ASSY
20 -	13B-10011-16	••RIB - STBD WING INBOARD CTR SLAT STA 118	371-	1
-29	13B-10011-17	••RIB - PORT WING INBOARD CTR SLAT STA 129	371-	1
	13B-10011-18	••RIB - STBD WING INBOARD CTR SLAT STA 129	371-	1
	13B-10011-31	••DOUBLER - INBOARD CENTRE SLAT	371-	1
-30	13B-10011-35	••SUPPORT - INBOARD CENTRE SLAT STA 130	371-	1
-31	13B-10011-19	••RIB - PORT WING INBOARD CTR SLAT STA 131	371-	1
	13B-10011-20	••RIB - STBD WING INBOARD CTR SLAT STA 131	371-	1
	13B-10011-29	••DOUBLER - INBOARD CENTRE SLAT	371-	1
-32	13B-10011-21	••RIB - PORT WING INBD CTR SLAT LE STA 142	371-691	1
	13B-10011-67	••RIB - PORT WING INBD CTR SLAT LE STA 142	692-	1
	13B-10011-22	••RIB - STBD WING INBD CTR SLAT LE STA 142	371-691	1
	13B-10011-68	••RIB - STBD WING INBD CTR SLAT LE STA 142	692-	1
	13B-10014-3	••FITTING - PORT WING SLAT INTERCONNECTOR	371-	1
	13B-10014-4	••FITTING - STARBOARD WING SLAT INTERCONN	371-	1
	13B-10011-41	••CLIP - PORT WING INBOARD CTR SLAT REINF	371-	1
	13B-10011-42	••CLIP - STBD WING INBOARD CTR SLAT REINF	371-	1
	13B-10011-43	••CLIP - PORT WING INBOARD CTR SLAT REINF	371-	1
	13B-10011-44	••CLIP - STBD WING INBOARD CTR SLAT REINF	371-	1
	13B-10011-49	••CLIP - PORT WING INBOARD CTR SLAT REINF	371-	1
	13B-10011-50	••CLIP - STBD WING INBOARD CTR SLAT REINF	371-	1
	13B-10011-51	••CLIP - PORT WING INBOARD CTR SLAT REINF	371-	1
	13B-10011-52	••CLIP - STBD WING INBOARD CTR SLAT REINF	371-	1
-33	13B-10011-23	••ANGLE - PORT WING INBOARD CENTRE SLAT	371-	1
	13B-10011-24	••ANGLE - STARBOARD WING INBOARD CTR SLAT	371-	1
-34	13B-10011-53	••STRIP - PORT WING INBOARD CENTRE SLAT TE	371-	1
	13B-10011-54	••STRIP - STARBOARD WING INBD CTR SLAT TE	371-	1
	13B-10021-1	••DOOR ASSY - WOP EXTENDED SLAT LE ACCESS (AS PER EO 05-5E-6A/144)	371-	4
	13B-10023-3	••DOUBLER - INBOARD LEADING EDGE SLAT REINF	692-	2
	13B-10023-5	••DOUBLER - INBOARD LEADING EDGE SLAT REINF	692-	1
	13B-10023-6	••DOUBLER - INBOARD LEADING EDGE SLAT REINF	692-	1
	AN509-10R7	••SCREW - (DOOR ATTACHING)	371-691	64
	AN509-10R10	••SCREW - (DOOR ATTACHING)	692-	44
	AN509-10R11	••SCREW - (DOOR ATTACHING)	692-	20
	2C28	••CLIP - BALL CHAIN ATTACHING (NAA)	371-	4
-35	13B-10011-3	••SKIN - PORT WING INBOARD CTR SLAT UPPER	371-	1
	13B-10011-4	••SKIN - STARBOARD WING INBD CTR SLAT UPPER	371-	1
-36	13B-10011-5	••SKIN - PORT WING INBOARD CTR SLAT LOWER	371-691	1
	13B-10011-63	••SKIN - PORT WING INBD CENTRE SLAT LOWER	692-	1
	13B-10011-6	••SKIN - STARBOARD WING INBD CTR SLAT LOWER	371-691	1
	13B-10011-64	••SKIN - STBD WING INBD CENTRE SLAT LOWER	692-	1
	AN7510-1	••PLATE -	371-	1
	13B-10012-1	•SLAT ASSY - PORT WING INTERMEDIATE OUTBD	371-669	1
		OR		
	13B-10012-803	•SLAT ASSY - PORT WING INTERMEDIATE OUTBD	371-669	
	13B-10012-803	•SLAT ASSY - PORT WING INTERMEDIATE OUTBD	670-691	1
		OR		
	13B-10012-801	•SLAT ASSY - PORT WING INTERMEDIATE OUTBD	371-691	
	13B-10012-801	•SLAT ASSY - PORT WING INTERMEDIATE OUTBD	692-	1
	13B-10012-2	•SLAT ASSY - STBD WING INTERMEDIATE OUTBD	371-669	1
		OR		
	13B-10012-804	•SLAT ASSY - STBD WING INTERMEDIATE OUTBD	371-669	
	13B-10012-804	•SLAT ASSY - STBD WING INTERMEDIATE OUTBD	670-691	1
		OR		
	13B-10012-802	•SLAT ASSY - STBD WING INTERMEDIATE OUTBD	371-691	
	13B-10012-802	•SLAT ASSY - STBD WING INTERMEDIATE OUTBD	692-	1
-37	13B-10012-9	••RIB - PORT WING INTERMEDIATE OUTBOARD SLATTED LEADING EDGE STA 142	371-691	1
	13B-10012-65	••RIB - PORT WING INTERMEDIATE OUTBOARD SLATTED LEADING EDGE STA 142	692-	1

FIGURE AND INDEX NUMBER	GROUP WING MAJOR ASSEMBLY OUTER WING SLATS PART NUMBER	1234567 NOMENCLATURE	CODE	UNITS PER ASSY
20 -	13B-10012-10	••RIB - STBD WING INTERMEDIATE OUTBOARD SLATTED LEADING EDGE STA 142	371-691	1
	13B-10012-66	••RIB - STBD WING INTERMEDIATE OUTBOARD SLATTED LEADING EDGE STA 142	692-	1
	13B-10014-4	••FITTING - SLAT INTERCONN RH (PORT WING)	371-	1
	13B-10014-3	••FITTING - SLAT INTERCONN LH (STBD WING)	371-	1
	13B-10012-39	••CLIP - PORT WING INTER OUTBD SLAT REINF	371-	1
	13B-10012-40	••CLIP - STBD WING INTER OUTBD SLAT REINF	371-	1
	13B-10012-43	••CLIP - PORT WING INTER OUTBD SLAT REINF	371-	1
	13B-10012-44	••CLIP - STBD WING INTER OUTBD SLAT REINF	371-	1
	13B-10012-47	••CLIP - PORT WING INTER OUTBD SLAT REINF	371-	1
	13B-10012-48	••CLIP - STBD WING INTER OUTBD SLAT REINF	371-	1
	13B-10012-51	••CLIP - PORT WING INTER OUTBD SLAT REINF	371-	1
	13B-10012-52	••CLIP - STBD WING INTER OUTBD SLAT REINF	371-	1
	140-17115	••WASHER - WING SLAT BUMPER	371-746	2
	140-17115-801	••WASHER - WING SLAT BUMPER	747-	1
	AN507-1032R7	••SCREW - (BUMPER WASHER ATTACHING)	747-	1
-38	13B-10012-11	••RIB - PORT WING INTER OUTBD SLAT STA 153	371-	1
	13B-10012-12	••RIB - STBD WING INTER OUTBD SLAT STA 153	371-	1
	13B-10012-27	••PLATE - INTERMEDIATE OUTBOARD SLAT	371-	1
-39	13B-10012-13	••RIB - PORT WING INTER OUTBD SLAT STA 155	371-	1
	13B-10012-14	••RIB - STBD WING INTER OUTBD SLAT STA 155	371-	1
	13B-10012-25	••PLATE - INTERMEDIATE OUTBOARD SLAT	371-	1
-40	13B-10012-15	••RIB - PORT WING INTER OUTBD SLAT STA 165	371-	1
	13B-10012-16	••RIB - STBD WING INTER OUTBD SLAT STA 165	371-	1
	13B-10012-57	••SHIM - INTER OUTBOARD SLAT STA 165 & 173	371-	4
-41	13B-10012-17	••RIB - PORT WING INTER OUTBD SLAT STA 174	371-	1
	13B-10012-18	••RIB - STBD WING INTER OUTBD SLAT STA 174	371-	1
-42	13B-10012-19	••RIB - PORT WING INTER OUTBD SLAT STA 184	371-	1
	13B-10012-20	••RIB - STBD WING INTER OUTBD SLAT STA 184	371-	1
	13B-10012-31	••PLATE - INTERMEDIATE OUTBOARD SLAT	371-	1
-43	13B-10012-21	••RIB - PORT WING INTER OUTBD SLAT STA 185	371-	1
	13B-10012-22	••RIB - STBD WING INTER OUTBD SLAT STA 185	371-	1
	13B-10012-29	••PLATE - INTERMEDIATE OUTBOARD SLAT	371-	1
-44	13B-10012-23	••RIB - PORT WING INTERMEDIATE OUTBOARD SLATTED LEADING EDGE STA 197	371-691	1
	13B-10012-67	••RIB - PORT WING INTERMEDIATE OUTBOARD SLATTED LEADING EDGE STA 197	692-	1
	13B-10012-24	••RIB - STBD WING INTERMEDIATE OUTBOARD SLATTED LEADING EDGE STA 197	371-691	1
	13B-10012-68	••RIB - STBD WING INTERMEDIATE OUTBOARD SLATTED LEADING EDGE STA 197	692-	1
	13B-10014-3	••FITTING - PORT WING SLAT INTERCONNECTOR	371-	1
	13B-10014-4	••FITTING - STARBOARD WING SLAT INTERCONN	371-	1
	13B-10012-41	••CLIP - PORT WING INTER OUTBD SLAT REINF	371-	1
	13B-10012-42	••CLIP - STBD WING INTER OUTBD SLAT REINF	371-	1
	13B-10012-45	••CLIP - PORT WING INTER OUTBD SLAT REINF	371-	1
	13B-10012-46	••CLIP - STBD WING INTER OUTBD SLAT REINF	371-	1
	13B-10012-49	••CLIP - PORT WING INTER OUTBD SLAT REINF	371-	1
	13B-10012-50	••CLIP - STBD WING INTER OUTBD SLAT REINF	371-	1
	13B-10012-53	••CLIP - PORT WING INTER OUTBD SLAT REINF	371-	1
	13B-10012-54	••CLIP - STBD WING INTER OUTBD SLAT REINF	371-	1
-45	13B-10012-7	••ANGLE - PORT WING INTERMEDIATE OUTBD SLAT	371-	1
	13B-10012-8	••ANGLE - STARBOARD WING INTER OUTBD SLAT	371-	1
-46	13B-10012-55	••STRIP - PORT WING INTER OUTBOARD SLAT TE	371-	1
	13B-10012-56	••STRIP - STBD WING INTER OUTBOARD SLAT TE	371-	1
	13B-10021-1	••DOOR ASSY - WOP EXTENDED SLAT LE ACCESS (AS PER EO 05-5E-6A/144)	371-	4
	13B-10023-3	••DOUBLER - LEADING EDGE OUTBD SLAT REINF	692-	2
	13B-10023-5	••DOUBLER - LEADING EDGE OUTBD SLAT REINF	692-	1

~~Stamper~~ Bellian

ROYAL CANADIAN AIR FORCE

.EO 05-5E-4
17 Feb 58

ADVANCE REVISION

Serial #7 dated 4 Dec 58
(Sheet 1 of 1)

The sheet of this Advance Revision is to be inserted in the EO as follows:-

Sheet 1 facing page 135

FIGURE and INDEX NUMBER	GROUP WING MAJOR ASSEMBLY WING EXTENDED LEADING EDGE PART NUMBER 1 2 3 4 5 6 7 NOMENCLATURE	Units Per Assy	Usage on Code
22	170-14001 Wing Assembly - Outer panel complete	Ref	
	172-14713-1 Tip Assembly - Port wing extended leading edge	1	001-370
	172-14713-801 Tip Assembly - Port wing extended leading edge S/S by 807 and 809		
	172-14713-807 Tip Assembly - Port wing extended leading edge Effectivity - 23611 to 23760 inclusive plus 23404 23432 23436 23437 23442 23446 23449 23492 23496 23503 23506 23511 23512 23513 23514 23515 23516 23526 23530 23532 23535 23537 23538 23546 23547 23548 23549 23550 23552 23554 23557	1	
	172-14713-809 Tip Assembly - Port wing extended leading edge Effectivity - 23371 to 23610 less above 31 aircraft		
	172-14713-2 Tip Assembly - Stbd wing extended leading edge	1	001-370
	172-14713-801 Tip Assembly - Stbd wing extended leading edge S/S by 808 and 810		
	172-14713-808 Tip Assembly - Stbd wing extended leading edge Effectivity - 23611 to 23760 inclusive plus 23404 23432 23436 23437 23442 23446 23449 23492 23496 23503 23506 23511 23512 23513 23514 23515 23516 23526 23530 23532 23535 23537 23538 23546 23547 23548 23549 23550 23552 23554 23557	1	
	172-14713-810 Tip Assembly - Stbd wing extended leading edge Effectivity - 23371 to 23610 less above 31 aircraft	1	

ISSUED ON AUTHORITY OF THE CHIEF OF THE AIR STAFF

FIGURE AND INDEX NUMBER	GROUP WING MAJOR ASSEMBLY OUTER WING SLATS PART NUMBER	1234567 NOMENCLATURE	CODE	UNITS PER ASSY
20 -	13B-10023-6	••DOUBLER - LEADING EDGE OUTBD SLAT REINF	692-	1
	AN509-10R7	••SCREW - (DOOR ATTACHING)	371-691	64
	AN509-10R10	••SCREW - (DOOR ATTACHING)	692-	44
	AN509-10R11	••SCREW - (DOOR ATTACHING)	692-	20
	2C28	••CLIP - BALL CHAIN ATTACHING (NAA)	371-	4
-47	13B-10012-5	••SKIN - PORT WING INTER OUTBD SLAT UPPER	371-	1
	13B-10012-6	••SKIN - STBD WING INTER OUTBD SLAT UPPER	371-	1
-48	13B-10012-3	••SKIN - PORT WING INTER OUTBD SLAT LOWER	371-691	1
	13B-10012-63	••SKIN - PORT WING INTER OUTBD SLAT LOWER	692-	1
	13B-10012-4	••SKIN - STBD WING INTER OUTBD SLAT LOWER	371-691	1
	13B-10012-64	••SKIN - STBD WING INTER OUTBD SLAT LOWER	692-	1
	AN7510-1	••PLATE -	371-	1
	13B-10013-1	•SLAT ASSY - PORT WING OUTBOARD	371-669	1
		OR		
	13B-10013-803	•SLAT ASSY - PORT WING OUTBOARD	371-669	
	13B-10013-803	•SLAT ASSY - PORT WING OUTBOARD	670-691	1
		OR		
	13B-10013-801	•SLAT ASSY - PORT WING OUTBOARD	371-691	
	13B-10013-801	•SLAT ASSY - PORT WING OUTBOARD	692-	1
	13B-10013-2	•SLAT ASSY - STARBOARD WING OUTBOARD	371-669	1
		OR		
	13B-10013-804	•SLAT ASSY - STARBOARD WING OUTBOARD	371-669	
	13B-10013-804	•SLAT ASSY - STARBOARD WING OUTBOARD	670-691	1
		OR		
	13B-10013-802	•SLAT ASSY - STARBOARD WING OUTBOARD	371-691	
	13B-10013-802	•SLAT ASSY - STARBOARD WING OUTBOARD	692-	1
-49	13B-10013-23	••RIB - PORT WING OUTBOARD SLAT LE STA 197	371-691	1
	13B-10013-67	••RIB - PORT WING OUTBOARD SLAT LE STA 197	692-	1
	13B-10013-24	••RIB - STBD WING OUTBOARD SLAT LE STA 197	371-691	1
	13B-10013-68	••RIB - STBD WING OUTBOARD SLAT LE STA 197	692-	1
	13B-10014-4	••FITTING - SLAT INTERCONN RH (PORT WING)	371-	1
	13B-10014-3	••FITTING - SLAT INTERCONN LH (STBD WING)	371-	1
	13B-10013-39	••CLIP - PORT WING OUTBD SLAT REINFORCING	371-	1
	13B-10013-40	••CLIP - STARBOARD WING OUTBOARD SLAT REINF	371-	1
	13B-10013-41	••CLIP - PORT WING OUTBD SLAT REINFORCING	371-	1
	13B-10013-42	••CLIP - STARBOARD WING OUTBOARD SLAT REINF	371-	1
	13B-10013-43	••CLIP - PORT WING OUTBD SLAT REINFORCING	371-	1
	13B-10013-44	••CLIP - STARBOARD WING OUTBOARD SLAT REINF	371-	1
	13B-10013-45	••CLIP - PORT WING OUTBD SLAT REINFORCING	371-	1
	13B-10013-46	••CLIP - STARBOARD WING OUTBOARD SLAT REINF	371-	1
	140-17115	••WASHER - WING SLAT BUMPER	371-746	1
	140-17115-801	••WASHER - WING SLAT BUMPER	747-	1
	AN507-1032R7	••SCREW - (BUMPER WASHER ATTACHING)	747-	1
-50	13B-10013-21	••RIB - PORT WING OUTBOARD SLAT STA 208	371-	1
	13B-10013-22	••RIB - STARBOARD WING OUTBD SLAT STA 208	371-	1
	13B-10013-31	••DOUBLER - OUTBOARD SLAT	371-	1
-51	13B-10013-19	••RIB - PORT WING OUTBOARD SLAT STA 210	371-	1
	13B-10013-20	••RIB - STARBOARD WING OUTBD SLAT STA 210	371-	1
	13B-10013-29	••DOUBLER - OUTBOARD SLAT	371-	1
-52	13B-10013-17	••RIB - PORT WING OUTBOARD SLAT STA 219	371-	1
	13B-10013-18	••RIB - STARBOARD WING OUTBD SLAT STA 219	371-	1
	13B-10013-49	••SHIM - OUTBOARD SLAT	371-	4
-53	13B-10013-15	••RIB - PORT WING OUTBOARD SLAT STA 229	371-	1
	13B-10013-16	••RIB - STARBOARD WING OUTBD SLAT STA 229	371-	1
-54	13B-10013-13	••RIB - PORT WING OUTBOARD SLAT STA 239	371-	1
	13B-10013-14	••RIB - STARBOARD WING OUTBD SLAT STA 239	371-	1
	13B-10013-27	••DOUBLER - OUTBOARD SLAT	371-	1
-55	13B-10013-11	••RIB - PORT WING OUTBOARD SLAT STA 240	371-	1
	13B-10013-12	••RIB - STARBOARD WING OUTBD SLAT STA 240	371-	1
	13B-10013-25	••DOUBLER - OUTBOARD SLAT	371-	1

FIGURE AND INDEX NUMBER	GROUP WING MAJOR ASSEMBLY OUTER WING SLATS PART NUMBER	1234567 NOMENCLATURE	CODE	UNITS PER ASSY
20 -56	13B-10013-9	••RIB - PORT WING OUTBD SLAT LE STA 249	371-691	1
	13B-10013-65	••RIB - PORT WING OUTBD SLAT LE STA 249	692-	1
	13B-10013-10	••RIB - STBD WING OUTBD SLAT LE STA 249	371-691	1
	13B-10013-66	••RIB - STBD WING OUTBD SLAT LE STA 249	692-	1
-57	13B-10013-37	••PLATE - PORT WING OUTBD SLAT REINFORCING	371-	1
	13B-10013-38	••PLATE - STARBOARD WING OUTBD SLAT REINF	371-	1
	AN509-8R7	••SCREW -	371-	5
-58	13B-10013-7	••ANGLE - PORT WING OUTBOARD SLAT	371-	1
	13B-10013-8	••ANGLE - STARBOARD WING OUTBOARD SLAT	371-	1
-59	13B-10013-47	••STRIP - PORT WING OUTBOARD SLAT TE	371-	1
	13B-10013-48	••STRIP - STARBOARD WING OUTBOARD SLAT TE	371-	1
	13B-10021-1	••DOOR ASSY - WOP EXTENDED SLAT LE ACCESS (AS PER EO 05-5E-6A/144)	371-	4
	13B-10022-3	••DOUBLER - LEADING EDGE OUTBD SLAT REINF	692-	1
	13B-10023-3	••DOUBLER - LEADING EDGE OUTBD SLAT REINF	692-	2
	13B-10023-5	••DOUBLER - PORT WING LE OUTBD SLAT REINF	692-	1
	13B-10023-6	••DOUBLER - STBD WING LE OUTBD SLAT REINF	692-	1
	AN509-10R7	••SCREW - (DOOR ATTACHING)	371-691	64
	AN509-10R10	••SCREW - (DOOR ATTACHING)	692-	44
	AN509-10R11	••SCREW - (DOOR ATTACHING)	692-	20
	2C28	••CLIP - BALL CHAIN ATTACHING (NAA)	371-	4
-60	13B-10013-3	••SKIN - PORT WING OUTBOARD SLAT UPPER	371-	1
	13B-10013-4	••SKIN - STARBOARD WING OUTBOARD SLAT UPPER	371-	1
-61	13B-10013-5	••SKIN - PORT WING OUTBOARD SLAT LOWER	371-691	1
	13B-10013-63	••SKIN - PORT WING OUTBOARD SLAT LOWER	692-	1
	13B-10013-6	••SKIN - STARBOARD WING OUTBOARD SLAT LOWER	371-691	1
	13B-10013-64	••SKIN - STARBOARD WING OUTBOARD SLAT LOWER	692-	1
-62	AN7510-1	••PLATE -	371-	1
-63	161-17170	•SPACER - WING SLAT INTERCONNECTOR (AS PER EO 05-5E-6B/9)	371-	3
-64	AN5-22A	•BOLT - (SLAT INTERCONNECTING)	371-	3
-65	2W1-21-28-64	•WASHER - PLAIN (NAA)	371-	6
	2W18-516M	•WASHER - FLAT (NAA) (FOR ADJUSTMENT)	371-	AR
	AN365-524	•NUT -	371-	3
-66	5B24-5-24	•BOLT - 12-POINT EXT WRH (NAA) (STA 60 & 97 & 154 & 209) (HEAD OUTWARD) FWD	371-	4
		OR		
	EWB-18-5-24	•BOLT - 12-POINT EXTERNAL WRENCHING (SPS)	371-	
-67	2W10-5	•WASHER - COUNTERSUNK (NAA)	371-	4
-68	202-14829-5	•WASHER - O/W LE SLAT TO TRACK ATTACHING	371-	4
		OR		
	202-14829-9	•WASHER - O/W LE SLAT TO TRACK ATTACHING	371-	
-69	180-17123	•BUSHING - WOP 15-DEG SLAT TO TRACK ATT	371-	4
-70	EB-054	•NUT - DOUBLE HEX HIGH TENSILE (ESN)	371-	4
-71	5B24-5-24	•BOLT - 12-POINT EXT WRH (NAA) (STA 75 & 130 & 185 & 240) (HEAD INWARD) FWD	371-	4
		OR		
	EWB-18-5-24	•BOLT - 12-POINT EXTERNAL WRENCHING (SPS)	371-	
-72	2W10-5	•WASHER - COUNTERSUNK (NAA)	371-	4
-73	202-14829-5	•WASHER - O/W LE SLAT TO TRACK ATTACHING	371-	4
		OR		
	202-14829-9	•WASHER - WOP LE SLAT TO TRACK ATTACHING	371-	
-74	180-17123	•BUSHING - WOP 15-DEG SLAT TO TRACK ATT	371-	4
-75	EB-054	•NUT - DOUBLE HEX HIGH TENSILE (ESN)	371-	4
-76	5B24-6-24	•BOLT - 12-POINT EXT WRH (NAA) (STA 60 & 97 & 154 & 209) (HEAD OUTWARD) (REAR)	371-	4
		OR		
	EWB-18-6-24	•BOLT - 12-POINT EXTERNAL WRENCHING (SPS)	371-	
-77	2W10-6	•WASHER - COUNTERSUNK (NAA)	371-	4
-78	202-14829-3	•WASHER - WOP LE SLAT TO TRACK ATTACHING	371-	4
		OR		
	202-14829-7	•WASHER - WOP LE SLAT TO TRACK ATTACHING	371-	

FIGURE AND INDEX NUMBER	GROUP WING MAJOR ASSEMBLY OUTER WING SLATS PART NUMBER	1234567 NOMENCLATURE	CODE	UNITS PER ASSY
20 -79	180-17069-3	•BUSHING - SLAT TO TRACK ATTACHING	371-	4
-80	EB-064	•NUT - DOUBLE HEX HIGH TENSILE (ESN)	371-	4
-81	5B24-6-24	•BOLT - 12-POINT EXT WRH (NAA) (STA 75 & 130 & 185 & 240) (HEAD INWARD)(REAR)	371-	4
		OR		
	EWB-18-6-24	•BOLT - 12-POINT EXTERNAL WRENCHING (SPS)	371-	
-82	2W10-6	•WASHER - COUNTERSUNK (NAA)	371-	4
-83	202-14829-3	•WASHER - WOP LE SLAT TO TRACK ATTACHING	371-	4
		OR		
	202-14829-7	•WASHER - O/W LE SLAT TO TRACK ATTACHING	371-	
-84	180-17069-3	•BUSHING - SLAT TO TRACK ATTACHING	371-	4
-85	EB-064	•NUT - DOUBLE HEX HIGH TENSILE (ESN)	371-	4
-86	202-17070	TRACK ASSY - SLAT POSITIONING LE STA 60 (SEE FIG. 18)		REF
-87	202-17071	TRACK ASSY - SLAT POSITIONING LE STA 75 (SEE FIG. 18)		REF
		-000-		

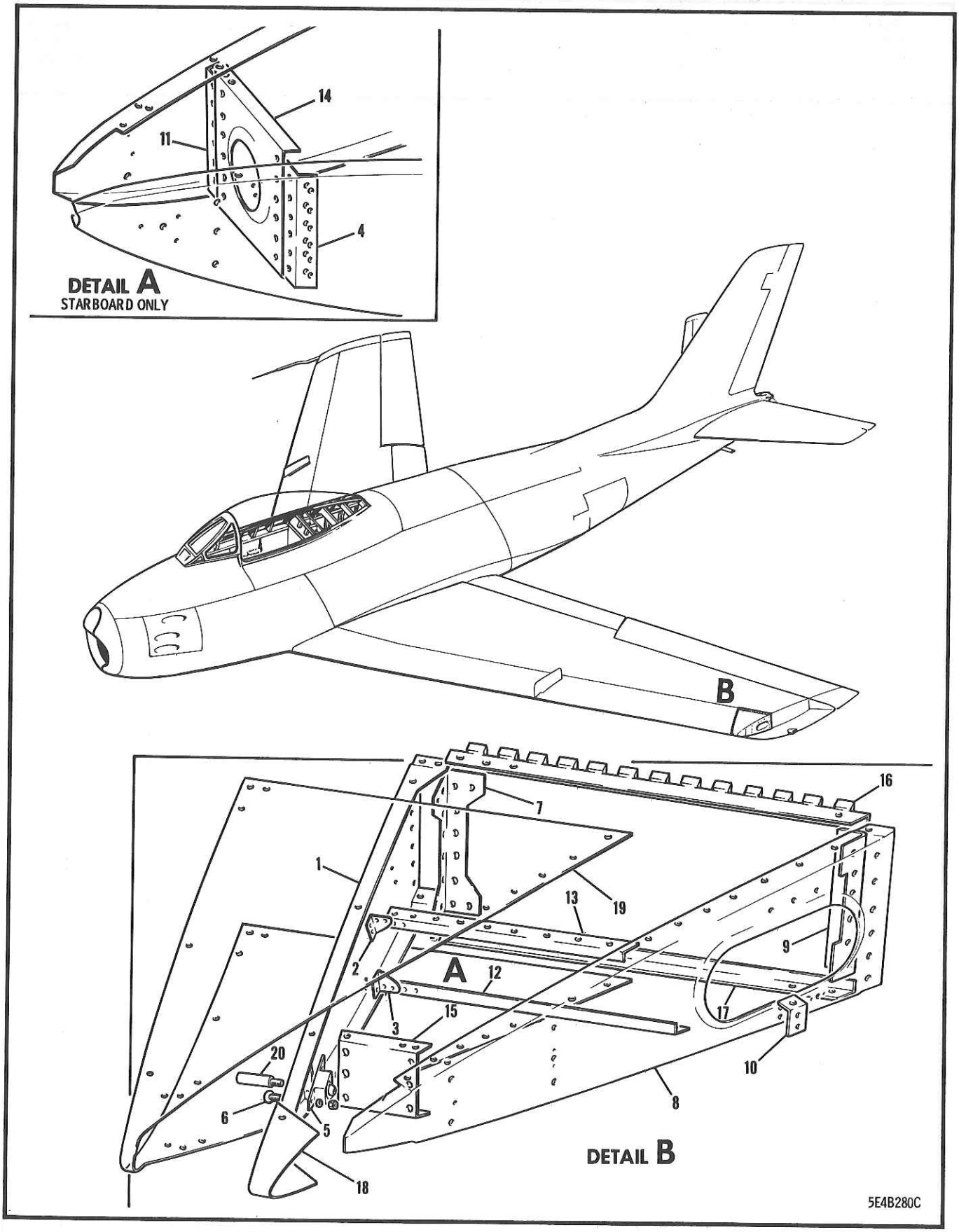

FIGURE 21 WEDGE EXTENDED SLATTED LEADING EDGE TO TIP
(EFFECTIVE AIRCRAFT 23371 & SUBS)

FIGURE AND INDEX NUMBER	GROUP WING MAJOR ASSEMBLY WEDGE EXTENDED SLATTED LEADING EDGE TO TIP PART NUMBER	1234567 NOMENCLATURE	CODE	UNITS PER ASSY
21 -	170-14601	WING ASSY - OUTER PANEL (SEE FIG. 6)		REF
	170-14002	.WING ASSY - OUTER PANEL INTERMEDIATE		REF
	13B-13024-20	..WEDGE ASSY - PORT EXTENDED SLATTED LEADING EDGE TO TIP (SEE FIG. 8) (AS PER EO 05-5E-6B/9)	371-	1
	13B-13024-21	..WEDGE ASSY - STARBOARD EXTENDED SLATTED LEADING EDGE TO TIP (SEE FIG. 8) (AS PER EO 05-5E-6B/9)	371-	1
- 1	13B-13010-3	...RIB - PORT EXTN SLATTED LE WEDGE STA 250	371-	1
	13B-13010-4	...RIB - STBD EXTN SLATTED LE WEDGE STA 250	371-	1
- 2	2C4	...CLIP - (NAA) (PORT WING)	371-	1
	2C4-1	...CLIP - (NAA) (STARBOARD WING)	371-	1
- 3	2C4-1	...CLIP - (NAA) (PORT WING)	371-	1
- 4	13B-13024-15	...ANGLE - EXTENDED SLATTED LEADING EDGE WEDGE (STARBOARD WING)	371-	1
- 5	227-14615	...FITTING ASSY - WOP EXTENDED LE TO WEDGE	371-	1
- 6	7S16-10-10	...SCREW - 100-DEG FLUSH HEAD CRE (NAA) (FITTING ATTACHING)	371-	3
	2W18-10	...WASHER - FLAT (NAA)	371-	3
	AN365-1032	...NUT -	371-	3
- 7	187-14520	...ANGLE - WOP EXTENDED LE RIB ATT STA 250	371-	1
- 8	13B-13024-2	...RIB - PORT EXTENDED SLATTED LE WEDGE	371-	1
	13B-13024-3	...RIB - STBD EXTENDED SLATTED LE WEDGE	371-	1
- 9	151-14242	...STIFFENER - WOP EXTN LE OUTBD CLOSE-OUT	371-	1
-10	2C31	...CLIP - (NAA)	371-	1
-11	13B-13024-19	...ANGLE - EXTENDED SLATTED LEADING EDGE WEDGE (STARBOARD WING)	371-	1
-12	13B-13024-8	...STIFFENER - PORT WING EXTENDED SLATTED LEADING EDGE WEDGE	371-	1
	13B-13024-9	...STIFFENER - STARBOARD WING EXTENDED SLATTED LEADING EDGE WEDGE	371-	1
-13	13B-13024-10	...STIFFENER - EXTENDED SLATTED LEADING EDGE WEDGE (PORT WING)	371-	1
-14	13B-13024-17	...BRACKET - EXTENDED SLATTED LEADING EDGE WEDGE (STARBOARD WING)	371-	1
-15	13B-13024-12	...BRACKET - PORT WING EXTENDED SLATTED LEADING EDGE WEDGE	371-	1
	13B-13024-13	...BRACKET - STARBOARD WING EXTENDED SLATTED LEADING EDGE WEDGE	371-	1
	13B-13024-30	...SHIM - EXTENDED SLATTED LE WEDGE	371-	2
-16	191-14548-953	...JOINT - PORT WOP LE OUTBOARD UPPER	371-	1
	191-14548-954	...JOINT - STARBOARD WOP LE OUTBOARD UPPER	371-	1
-17	191-14549-953	...JOINT - PORT WOP LE FWD SPAR OUTBD LOWER	371-	1
	191-14549-954	...JOINT - STBD WOP LE FWD SPAR OUTBD LOWER	371-	1
-18	13B-13024-4	...DOUBLER - EXTENDED SLATTED LEADING EDGE TO TIP WEDGE SKIN	371-	1
-19	13B-13024-6	...SKIN - PORT WING EXTENDED SLATTED LEADING EDGE TO TIP WEDGE SKIN	371-	1
	13B-13024-7	...SKIN - STARBOARD WING EXTENDED SLATTED LEADING EDGE TO TIP WEDGE	371-	1
-20	227-14617	.STUD - WOP EXTENDED LEADING EDGE TO WEDGE (AS PER EO 05-5E-6B/9).	371-	1

-000-

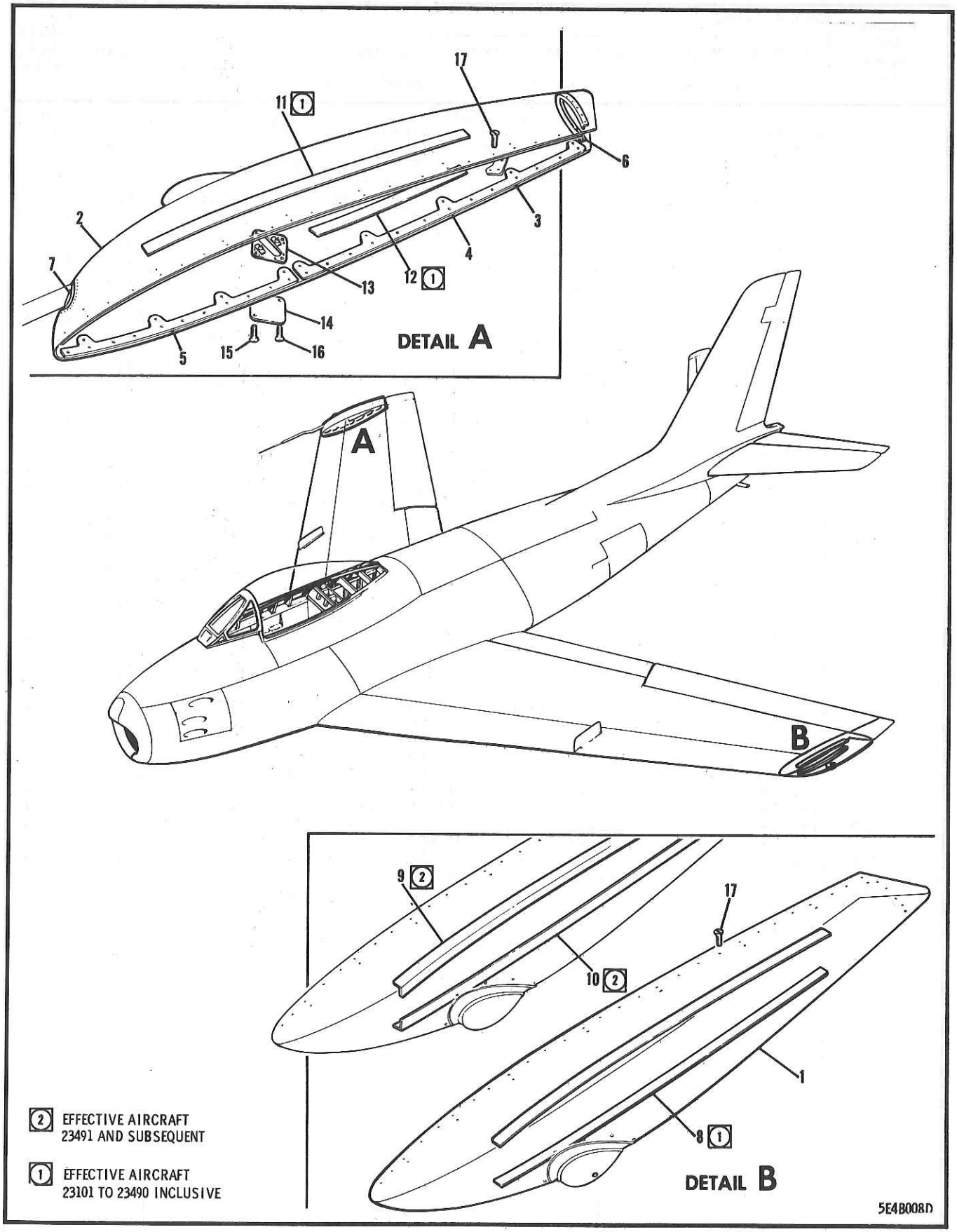

FIGURE 22 WING EXTENDED LEADING EDGE TIP

Fig. and Index Number	Wing Group Major Assembly Wing Extended Leading Edge Part Number	Nomenclature	Code	Units Per Assy
22	170-14001	Wing Assembly - Outer Panel Complete		
	172-14713-1	Tip Assembly - Port Wing Extended Leading Edge	001-370	1
	172-14713-801	Tip Assembly - Port Wing Extended Leading Edge S/S by 807 and 809		
	172-14713-807	Tip Assembly - Port Wing Extended Leading Edge Effectivity - 23611 - 23760 inclusive plus 23404, 23432, 23436, 23437, 23442, 23446, 23449 23492, 23496, 23503, 23506, 23511, 23512, 23513 23514, 23515, 23516, 23526, 23530, 23532, 23535 23537, 23538, 23546, 23547, 23548, 23549, 23550 23552, 23554, 23557		1
	172-14713-809	Tip Assembly - Port Wing Extended Leading Edge Effectivity - 23371 to 23610 less above 31 aircraft		
	172-14713-2	Tip Assembly - Stbd Wing Extended Leading Edge	001-370	1
	172-14713-802	Tip - Stbd Wing Extended Leading Edge S/S by - 808 and 810		
	172-14713-808	Tip Assembly - Stbd Wing Extended Leading Edge Effectivity - 23611 - 23760 inclusive plus 23404, 23432, 23436, 23437, 23442, 23446, 23449, 23492, 23496, 23503, 23506, 23511, 23512, 23513, 23514, 23515, 23516, 23526, 23530, 23532, 23535, 23537, 23538, 23546, 23547, 23548, 23549, 23550, 23552, 23554, 23557		1
	172-14713-810	Tip Assembly - Stbd Wing Extended Leading Edge Effectivity - 23371 to 23610 inclusive less above 31 aircraft.		1

FIGURE AND INDEX NUMBER	GROUP WING MAJOR ASSEMBLY WING EXTENDED LEADING EDGE TIP PART NUMBER	1234567 NOMENCLATURE	CODE	UNITS PER ASSY
				REF
22 -	170-14001	WING ASSY - OUTER PANEL COMPLETE	001-610	1
	172-14713-1	•TIP ASSY - PORT WING EXTENDED LEADING EDGE (SEE FIG. 6)	371-610	
	172-14713-809	•SPARE PART ASSY FOR 172-14713-1	611-	1
	172-14713-801	•TIP ASSY - PORT WING EXTENDED LEADING EDGE	001-610	1
	172-14713-2	•TIP ASSY - STBD WING EXTENDED LEADING EDGE (SEE FIG. 6)	371-610	
	172-14713-810	•SPARE PART ASSY FOR 172-14713-2	611-	1
	172-14713-802	•TIP ASSY - STBD WING EXTENDED LEADING EDGE	001-610	1
- 1	172-14713-3	••COVER - PORT WING EXTENDED LE TIP	611-	1
	172-14713-961	••COVER - PORT WING EXTENDED LE TIP	001-610	1
- 2	172-14713-4	••COVER - STARBOARD WING EXTENDED LE TIP	611-	1
	172-14713-962	••COVER - STARBOARD WING EXTENDED LE TIP		2
- 3	172-14713-5	••SHIM - WING EXTN LE TIP (UPPER & LOWER)	001-610	1
	172-14713-7	••SHIM - WING EXTENDED LE TIP (UPPER)	611-	1
	172-14713-963	••SHIM - WING EXTENDED LE TIP (UPPER)	001-610	1
- 4	172-14713-9	••SHIM - WING EXTENDED LE TIP (LOWER)	611-	1
	172-14713-965	••SHIM - WING EXTENDED LE TIP (LOWER)		1
	172-14713-11	••SHIM - PORT WING EXTN LE TIP (UPPER)		1
	172-14713-12	••SHIM - STARBOARD WING EXTN LE TIP (UPPER)		1
	172-14713-13	••SHIM - PORT WING EXTN LE TIP (LOWER)		1
- 5	172-14713-14	••SHIM - STARBOARD WING EXTN LE TIP (LOWER)		1
- 6	172-14713-15	••STIFFENER - WING EXTENDED LE TIP		1
- 7	172-14713-17	••SEAL - WING EXTENDED LEADING EDGE TIP PITOT TUBE (STARBOARD WING)		1
	172-14713-19	••RETAINER - WING EXTENDED LEADING EDGE TIP PITOT TUBE (STARBOARD WING)		1
- 8	172-14713-951	••STRIP - WING EXTENDED LEADING EDGE TIP (UPPER & LOWER) (PORT WING)	101-490	2
- 9	172-14713-959	••ANGLE - WING EXTN LE TIP (UP.)(PORT WING)	491-	1
-10	172-14713-955	••ANGLE - WING EXTN LE TIP (LWR)(PORT WING)	491-	1
-11	172-14713-951	••STRIP - WING EXTN LE TIP (UP.)(STBD WING)	101-490	1
	172-14713-969	••ANGLE - WING EXTN LE TIP (UP.)(STBD WING)	491-	1
-12	172-14713-953	••STRIP - WING EXTN LE TIP (LWR)(STBD WING)	101-490	1
	172-14713-957	••ANGLE - WING EXTN LE TIP (LWR)(STBD WING)	491-	1
-13	165-14200	••DOUBLER ASSY - WING TIP PITOT TUBE DRAIN ACCESS (STARBOARD WING)		1
-14	165-14199	••COVER - WING TIP PITOT TUBE DRAIN ACCESS (STARBOARD WING)		1
-15	7S16-10-9	••SCREW - 100-DEG FLUSH HEAD (NAA) (COVER ATTACHING STARBOARD WING)		1
-16	AN507C1032R16	••SCREW - (COVER ATTACHING STARBOARD WING)		1
	AN960D10	••WASHER - (STARBOARD WING)		1
	AN380C2-2	••PIN - (STARBOARD WING)		1
	AN7510-2	••PLATE -		1
-17	AN507C832R10	•SCREW - (WING TIP ATTACHING)	001-370	58
	AN507C832R10	•SCREW - (PORT WING TIP ATTACHING) (AS PER EO 05-5E-6B/9)	371-610	58
	7S13CN832-10A	•SCREW - 100-DEG FLUSH HEAD CRE (NAA) (STARBOARD WING TIP ATTACHING) (AS PER EO 05-5E-6B/9)	371-610	58
	7S13CN1032-8A	•SCREW - 100-DEG FLUSH HEAD CRE (NAA) (WING TIP ATTACHING)	611-	30
	7S13CN832-8A	•SCREW - 100-DEG FLUSH HEAD CRE (NAA) (WING TIP ATTACHING)	611-	28
	7S21-10-11	•SCREW - 100-DEG FLUSH HEAD CRE (NAA) (WING TIP ATTACHING)	611-	2

(CONTINUED SEE SECTION 10)

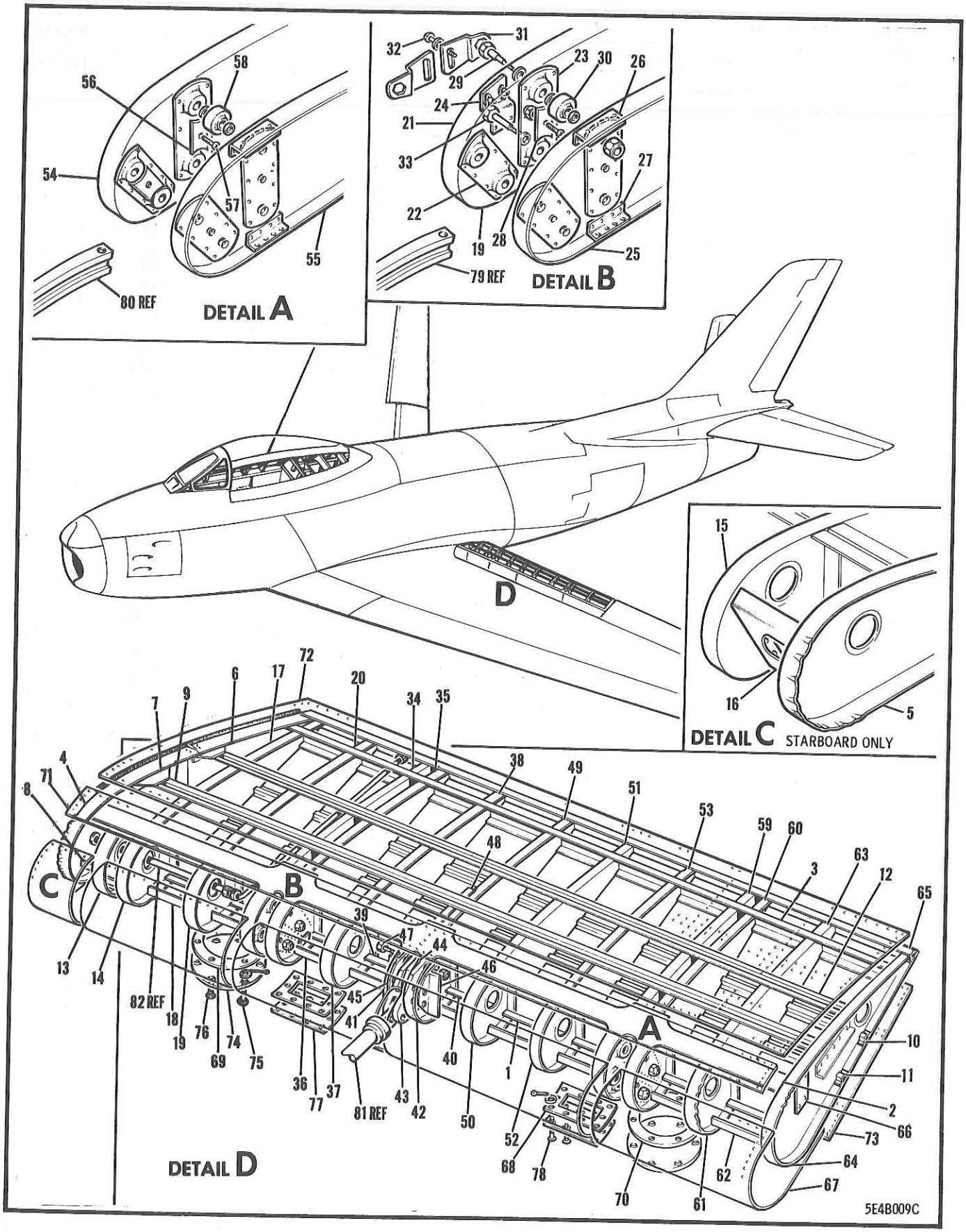

FIGURE 23 OUTER WING FLAP

FIGURE AND INDEX NUMBER	GROUP / MAJOR ASSEMBLY / PART NUMBER	WING / OUTER WING FLAP / 1234567 NOMENCLATURE	CODE	UNITS PER ASSY
23 -	177-18001-101	FLAP ASSY - PORT OUTER WING (SEE FIG. 6)	001-662	1
	177-18001-801	FLAP ASSY - PORT OUTER WING	663-	1
	177-18001-805	SPARE PART ASSY FOR 177-18001-801		
	177-18001-2	FLAP ASSY - STARBOARD OUTER WING (SEE FIG. 6)	001-662	1
	177-18001-802	FLAP ASSY - STARBOARD OUTER WING	663-	1
	177-18001-806	SPARE PART ASSY FOR 177-18001-802		
- 1	140-18004-21	.SPAR ASSY - PORT OUTER WING FLAP FORWARD		1
	140-18004-22	.SPAR ASSY - STARBOARD OUTER WING FLAP FWD		1
	140-18004-3	..WEB - PORT FLAP FRONT SPAR		1
	140-18004-4	..WEB - STARBOARD FLAP FRONT SPAR		1
	140-18004-5	..ANGLE - PORT FLAP FRONT SPAR		1
	140-18004-6	..ANGLE - STARBOARD FLAP FRONT SPAR		1
	140-18004-7	..ANGLE - PORT FLAP FRONT SPAR		1
	140-18004-8	..ANGLE - STARBOARD FLAP FRONT SPAR		1
	140-18004-23	..ANGLE - PORT FLAP FRONT SPAR		1
	140-18004-24	..ANGLE - STARBOARD FLAP FRONT SPAR		1
	140-18004-11	..ANGLE - FLAP FRONT SPAR		1
- 2	140-18026-3	.CAP - PORT FLAP FRONT SPAR UPPER		1
	140-18026-4	.CAP - STARBOARD FLAP FRONT SPAR UPPER		1
	140-18026-5	.CAP - PORT FLAP FRONT SPAR LOWER		1
	140-18026-6	.CAP - STARBOARD FLAP FRONT SPAR LOWER		1
- 3	177-18001-13	.SPAR ASSY - PORT OUTER WING FLAP REAR		1
	177-18001-14	.SPAR ASSY - STARBOARD OUTER WING FLAP REAR		1
- 4	177-18001-119	.RIB - PORT FLAP STA 6		1
- 5	177-18001-120	.RIB - STARBOARD FLAP STA 6		1
	177-18001-109	.REINFORCER - FLAP STA 6 TRAILING EDGE	001-200	1
	177-18001-145	.GUSSET - FLAP STA 6		1
	177-18001-61	.SPACER - PORT FLAP STA 7 TRAILING EDGE		1
	177-18001-62	.SPACER - STBD FLAP STA 7 TRAILING EDGE		1
- 6	177-18001-71	.SEAL - FLAP TRAILING EDGE STA 7		1
	177-18001-123	.CLIP - PORT FLAP TRAILING EDGE STA 7		1
	177-18001-124	.CLIP - STARBOARD FLAP TRAILING EDGE STA 7		1
	177-18001-73	.SUPPORT - PORT FLAP LEADING EDGE STA 7		1
	177-18001-74	.SUPPORT - STARBOARD FLAP LE STA 7		1
	177-18001-81	.SUPPORT - PORT FLAP TRAILING EDGE STA 7		1
	177-18001-82	.SUPPORT - STARBOARD FLAP TE STA 7		1
	177-18001-111	.CLIP - PORT FLAP TRAILING EDGE STA 7	001-200	1
	177-18001-112	.CLIP - STARBOARD FLAP TRAILING EDGE STA 7	001-200	1
	177-18001-127	.CLIP - PORT FLAP TRAILING EDGE STA 7	001-200	1
	177-18001-128	.CLIP - STARBOARD FLAP TRAILING EDGE STA 7	001-200	1
	177-18001-133	.CLIP - FLAP TRAILING EDGE STA 7	001-200	1
- 7	177-18001-141	.GUSSET - FLAP LEADING EDGE STA 10		1
	177-18001-143	.GUSSET - FLAP TRAILING EDGE STA 10		1
- 8	177-18001-27	.REINFORCER - PORT FLAP LE STA 6-11		1
	177-18001-29	.ANGLE - PORT FLAP LEADING EDGE STA 6-11		1
	177-18001-125	.CLIP - PORT FLAP TRAILING EDGE STA 11	001-200	1
	177-18001-126	.CLIP - STARBOARD FLAP TRAILING EDGE STA 11	001-200	1
	177-18001-121	.CLIP - PORT FLAP TRAILING EDGE STA 11	001-200	1
	177-18001-122	.CLIP - STARBOARD FLAP TRAILING EDGE STA 11	001-200	1
	177-18001-129	.CLIP - PORT FLAP TRAILING EDGE STA 11	001-200	1
	177-18001-130	.CLIP - STARBOARD FLAP TRAILING EDGE STA 11	001-200	1
- 9	177-18001-63	.STRINGER - PORT FLAP STA 7-95 UPPER		1
	177-18001-64	.STRINGER - STARBOARD FLAP STA 7-95 UPPER		1
-10	177-18001-15	.STRINGER - PORT FLAP STA 7-95 LOWER		1
	177-18001-16	.STRINGER - STARBOARD FLAP STA 7-95 LOWER		1
-11	177-18001-17	.STRINGER - STA 7-95 LOWER		1
-12	177-18001-59	.STRINGER - PORT FLAP STA 10-95 UPPER		1
	177-18001-60	.STRINGER - STARBOARD FLAP STA 10-95 UPPER		1
-13	177-18001-117	.RIB - PORT FLAP LEADING EDGE STA 12		1
-14	177-18001-33	.RIB - PORT FLAP LEADING EDGE STA 15		1
-15	177-18001-34	.RIB - STARBOARD FLAP LEADING EDGE STA 15		1

FIGURE AND INDEX NUMBER	GROUP WING MAJOR ASSEMBLY OUTER WING FLAP PART NUMBER	1234567 NOMENCLATURE	CODE	UNITS PER ASSY
23 -	140-18024-1	•DOUBLER - FLAP FOLLOW-UP CONTROL STA 12 (PORT) (HYDRAULIC DRAIN)		1
-16	140-18025-12	•REINFORCER ASSY - FLAP RIB STA 15 (STBD)		1
	140-18025-6	••ANGLE - STARBOARD FLAP STA 7-15 RIB REINF		1
	140-18025-8	••WEB - STARBOARD FLAP STA 7-15 RIB		1
-17	177-18001-55	•RIB - PORT FLAP TRAILING EDGE STA 15		1
	177-18001-56	•RIB - STARBOARD FLAP TRAILING EDGE STA 15		1
	177-18001-25	•ANGLE - FLAP STA 15		1
-18	177-18001-137	•STRINGER - PORT FLAP STA 15-25 LOWER		1
	177-18001-138	•STRINGER - STARBOARD FLAP STA 15-25 LOWER		1
-19	177-18001-35	•RIB - PORT FLAP LEADING EDGE STA 24		1
	177-18001-36	•RIB - STARBOARD FLAP LEADING EDGE STA 24		1
-20	177-18001-89	•FORMER - PORT FLAP TRAILING EDGE STA 24		1
	177-18001-90	•FORMER - STARBOARD FLAP TE STA 24		1
	177-18001-31	•ANGLE - FLAP LEADING EDGE STA 24		2
	177-18001-57	•RIB - PORT FLAP TRAILING EDGE STA 24		1
	177-18001-58	•RIB - STARBOARD FLAP TRAILING EDGE STA 24		1
	151-18032-1	•RIB ASSY - PORT FLAP STA 32 LEADING EDGE		1
	151-18032-2	•RIB ASSY - STARBOARD FLAP STA 24 LE		1
-21	151-18032-3	••RIB - PORT FLAP STA 32 LEADING EDGE		1
	151-18032-4	••RIB - STARBOARD FLAP STA 32 LEADING EDGE		1
	151-18035-1	••ANGLE - PORT FLAP LE RIB STA 34 UP• REINF		1
	151-18035-2	••ANGLE - STARBOARD FLAP LEADING EDGE RIB STA 34 UPPER REINFORCING		1
	151-18036-1	••ANGLE - PORT FLAP LE RIB LWR REINFORCING		1
	151-18036-2	••ANGLE - STARBOARD FLAP LE RIB LOWER REINF		1
-22	152-18020-9	••FITTING - FLAP TRACK ROLLER SUPPORT (FORWARD)		1
-23	152-18020-5	••FITTING - FLAP TRACK ROLLER SUP• (REAR)		1
-24	140-18046	••BRACKET ASSY - FLAP TRACK ROLLER ADJ LOCK		1
	177-18001-91	•FORMER - PORT FLAP TE STA 32 & 34		2
	177-18001-92	•FORMER - STARBOARD FLAP TE STA 32 & 34		2
	177-18001-37	•ANGLE - FLAP STA 32 & 34 LEADING EDGE		2
	151-18034-1	•RIB ASSY - PORT FLAP STA 34 LEADING EDGE		1
	151-18034-2	•RIB ASSY - STARBOARD FLAP STA 34 LE		1
-25	151-18034-3	••RIB - PORT FLAP STA 34 LEADING EDGE		1
	151-18034-4	••RIB - STARBOARD FLAP STA 34 LEADING EDGE		1
-26	151-18035-1	••ANGLE - PORT FLAP LE RIB STA 34 UP• REINF		1
	151-18035-2	••ANGLE - STARBOARD FLAP LE RIB STA 34 UPPER REINFORCING		1
-27	151-18036-1	••ANGLE - PORT FLAP LE RIB LWR REINFORCING		1
	151-18036-2	••ANGLE - STARBOARD FLAP LE RIB LOWER REINF		1
	152-18020-7	••FITTING - FLAP TRACK ROLLER SUPPORT FWD		1
	152-18020-3	••FITTING - FLAP TRACK ROLLER SUP• (REAR)		1
-28	151-18041	•STRIP - WING OUTER PANEL FLAP TRACK SIDE LOAD CHAFING (REAR)		2
	151-18042-3	•SHIM - WING OUTER PANEL FLAP TRACK SIDE LOAD CHAFING STRIP (REAR)		4
	151-18042-5	•SHIM - WING OUTER PANEL FLAP TRACK SIDE LOAD CHAFING STRIP (REAR)		2
	AN509-10R12	•SCREW - (SHIM ATTACHING)		2
	AN364-1032	•NUT -		2
-29	140-18015	•BOLT - FLAP ROLLER ADJUSTING MPI		2
	AN960D716L	•WASHER -		2
	2W1-25-20-71	•WASHER - PLAIN (NAA)		2
-30	LSS6B	•BEARING - UNIBAL SPHERICAL (HEC) (TRACK ROLLER) OR		4
	HA6R1	•BEARING - (HEC) OR		
	HA6R2	•BEARING - (HEC)		

FIGURE AND INDEX NUMBER	GROUP WING MAJOR ASSEMBLY OUTER WING FLAP PART NUMBER	1234567 NOMENCLATURE	CODE	UNITS PER ASSY
23 -	2W1-21-18-71	•WASHER - PLAIN (NAA)		2
	AN365-524	•NUT -		2
-31	140-18047	•LOCK - FLAP ROLLER ADJUSTING BOLT		2
-32	AN3-5A	•BOLT - (LOCK ATTACHING)		2
	2W1-12-16-64	•WASHER - PLAIN (NAA)		2
-33	AN6-21A	•BOLT - MPI (FLAP ROLLER ADJUSTING)		2
	AN960D616L	•WASHER - (UNDER BOLT HD)		4
	2W1-25-20-71	•WASHER - PLAIN (NAA)		2
	AN365-624	•NUT -		1
	151-18132-1	•RIB ASSY - PORT FLAP STA 32 TRAILING EDGE		1
	151-18132-2	•RIB ASSY - STARBOARD FLAP STA 32 TE		1
-34	151-18132-3	••RIB - PORT FLAP STA 32 TRAILING EDGE		1
	151-18132-4	••RIB - STARBOARD FLAP STA 32 TRAILING EDGE		1
	151-18135-3	••ANGLE - PORT FLAP TE RIB UP• REINFORCING		1
	151-18135-4	••ANGLE - STARBOARD FLAP TE RIB UPPER REINF		1
	151-18136-3	••ANGLE - PORT FLAP TE RIB LWR REINFORCING		1
	151-18136-4	••ANGLE - STARBOARD FLAP TE RIB LOWER REINF		1
	151-18137-3	••CHANNEL - PORT FLAP TRAILING EDGE RIB		1
	151-18137-4	••CHANNEL - STBD FLAP TRAILING EDGE RIB		1
	151-18134-1	•RIB ASSY - PORT FLAP STA 34 TRAILING EDGE		1
	151-18134-2	•RIB ASSY - STBD FLAP STA 34 TRAILING EDGE		1
-35	151-18134-3	••RIB - PORT FLAP STA 34 TRAILING EDGE		1
	151-18134-4	••RIB - STARBOARD FLAP STA 34 TRAILING EDGE		1
	151-18135-3	••ANGLE - PORT FLAP TE RIB UP• REINFORCING		1
	151-18135-4	••ANGLE - STARBOARD FLAP TE RIB UPPER REINF		1
	151-18136-3	••ANGLE - PORT FLAP TE RIB LWR REINFORCING		1
	151-18136-4	••ANGLE - STARBOARD FLAP TE RIB LOWER REINF		1
	151-18137-3	••CHANNEL - PORT FLAP TRAILING EDGE RIB		1
	151-18137-4	••CHANNEL - STARBOARD FLAP TE RIB		1
-36	177-18001-103	•STIFFENER - PORT FLAP STA 34-75 LOWER		1
	177-18001-104	•STIFFENER - STARBOARD FLAP STA 34-75 LOWER		1
-37	177-18011-1	•RIB - PORT FLAP STA 42 LEADING EDGE		1
	177-18011-2	•RIB - STARBOARD FLAP STA 42 LEADING EDGE		1
	177-18001-39	•ANGLE - FLAP LEADING EDGE STA 42 RIB		1
-38	177-18001-67	•RIB - PORT FLAP STA 42 TRAILING EDGE		1
	177-18001-68	•RIB - STARBOARD FLAP STA 42 TRAILING EDGE		1
	177-18001-105	•STIFFENER - PORT FLAP STA 42-51		1
	177-18001-106	•STIFFENER - STARBOARD FLAP STA 42-51		1
-39	177-18012-7	•INTERCOSTAL - PORT FLAP STA 42-52 LEADING EDGE (INBOARD)		1
-40	177-18012-5	•INTERCOSTAL - PORT FLAP STA 42-59 LEADING EDGE (OUTBOARD)		1
	177-18012-8	•INTERCOSTAL - STARBOARD FLAP STA 42-59 LEADING EDGE (INBOARD)		1
	177-18012-6	•INTERCOSTAL - STARBOARD FLAP STA 42-59 LEADING EDGE (OUTBOARD)		1
	177-18001-93	•FORMER - PORT FLAP STA 42 TRAILING EDGE		1
	177-18001-94	•FORMER - STBD FLAP STA 42 TRAILING EDGE		1
	173-18053-3	•ANGLE - FLAP STA 42-95 RIB LOWER FORWARD REINFORCING LH (PORT)		1
	173-18053-4	•ANGLE - FLAP STA 42-95 RIB LOWER FORWARD REINFORCING RH (STARBOARD)		1
	173-18053-4	•ANGLE - FLAP STA 42-95 RIB LOWER FORWARD REINFORCING RH (PORT)		1
	173-18053-3	•ANGLE - FLAP STA 42-95 RIB LOWER FORWARD REINFORCING LH (STARBOARD)		1
	173-18053-6	•ANGLE - FLAP STA 42-95 RIB LOWER FORWARD REINFORCING RH (PORT)		3
	173-18053-5	•ANGLE - FLAP STA 42-95 RIB LOWER FORWARD REINFORCING LH (STARBOARD)		3

FIGURE AND INDEX NUMBER	GROUP WING MAJOR ASSEMBLY OUTER WING FLAP PART NUMBER	1234567 NOMENCLATURE	CODE	UNITS PER ASSY
23 -	173-18054-3	•ANGLE - FLAP STA 42-95 RIB LOWER INTER REINFORCING		6
	173-18055-3	•ANGLE - FLAP STA 42-95 RIB LOWER REAR REINFORCING LH (PORT)		2
	173-18055-4	•ANGLE - FLAP STA 42-95 RIB LOWER REAR REINFORCING RH (STARBOARD)		2
	173-18055-3	•ANGLE - FLAP STA 42-95 RIB LOWER REAR REINFORCING LH (STARBOARD)		4
	173-18055-4	•ANGLE - FLAP STA 42-95 RIB LOWER REAR REINFORCING RH (PORT)		4
	177-18010-1	•RIB ASSY - PORT FLAP STA 51 LEADING EDGE		1
	177-18010-2	•RIB ASSY - STARBOARD FLAP STA 51 LE		1
-41	177-18010-3	••RIB - FLAP STA 51 LEADING EDGE (INBOARD)		1
-42	177-18010-4	••RIB - FLAP STA 51 LEADING EDGE (OUTBOARD)		1
	177-18010-7	••ANGLE - FLAP STA 51 LEADING EDGE		1
-43	177-18050	••FITTING - FLAP TO ACTUATOR ATTACHING		1
-44	177-18049	••SPACER - FLAP TO ACTUATOR ATTACHING		1
-45	177-18048-1	••TEE - FLAP LE RIB TO INTERCOSTAL ATT (INBOARD)		1
-46	177-18048-2	••TEE - FLAP LE RIB TO INTERCOSTAL ATT (OUTBOARD)		1
-47	AN3-14A	••BOLT - (TEE TO RIB ATTACHING)		5
	AN365-1032	••NUT -		5
	151-18150-1	•RIB ASSY - PORT FLAP STA 51 TRAILING EDGE		1
	177-18150-2	•RIB ASSY - STARBOARD FLAP STA 51 TE		1
-48	151-18150-3	••RIB - FLAP STA 51 TRAILING EDGE (INBOARD)		1
-49	151-18150-4	••RIB - FLAP STA 51 TRAILING EDGE (OUTBD)		1
	151-18135-7	••ANGLE - PORT FLAP TE RIB UPPER REINF		1
	151-18135-8	••ANGLE - STARBOARD FLAP RIB UPPER REINF		1
	151-18136-7	••ANGLE - PORT FLAP TE RIB LWR REINFORCING		1
	151-18136-8	••ANGLE - STARBOARD FLAP RIB LOWER REINF		1
	151-18137-1	••CHANNEL - PORT FLAP TRAILING EDGE RIB		1
	151-18137-2	••CHANNEL - STARBOARD FLAP TE RIB		1
	177-18001-85	•FORMER - PORT FLAP STA 51 TRAILING EDGE		1
	177-18001-86	•FORMER - STARBOARD FLAP STA 51 TE		1
	177-18001-41	•ANGLE - PORT FLAP STA 51 UPPER REINFORCING		1
-50	177-18011-3	•RIB - PORT FLAP STA 59 LEADING EDGE		1
	177-18011-4	•RIB - STARBOARD FLAP STA 59 LEADING EDGE		1
	177-18001-51	•ANGLE - FLAP STA 52 LEADING EDGE		1
	177-18001-95	•FORMER - PORT FLAP STA 59 TRAILING EDGE		1
	177-18001-96	•FORMER - STARBOARD FLAP STA 59 TE		1
-51	177-18001-75	•RIB - PORT FLAP STA 59 TRAILING EDGE		1
	177-18001-76	•RIB - STARBOARD FLAP STA 59 TRAILING EDGE		1
-52	177-18001-47	•RIB - PORT FLAP STA 67 LEADING EDGE		1
	177-18001-48	•RIB - STARBOARD FLAP STA 67 LEADING EDGE		1
-53	177-18001-77	•RIB - PORT FLAP STA 67 TRAILING EDGE		1
	177-18001-78	•RIB - STARBOARD FLAP STA 67 TRAILING EDGE		1
	177-18001-65	•ANGLE - FLAP STA 67 LEADING EDGE		1
	177-18001-87	•FORMER - FLAP STA 67 TRAILING EDGE		1
	177-18001-88	•FORMER - FLAP STA 67 TRAILING EDGE		1
	151-18076-1	•RIB ASSY - PORT FLAP STA 75 LEADING EDGE		1
	151-18076-2	•RIB ASSY - STARBOARD FLAP STA 75 LE		1
-54	151-18076-3	••RIB - PORT FLAP STA 75 LEADING EDGE		1
	151-18076-4	••RIB - STARBOARD FLAP STA 75 LEADING EDGE		1
	151-18078-1	••ANGLE - PORT FLAP LE RIB UP• REINFORCING		1
	151-18078-2	••ANGLE - STARBOARD FLAP LE RIB UPPER REINF		1
	151-18036-1	••ANGLE - PORT FLAP LE RIB LWR REINFORCING		1
	151-18036-2	••ANGLE - STARBOARD FLAP LE RIB LOWER REINF		1
	152-18020-7	••FITTING - FLAP TRACK ROLLER SUPPORT FWD		1
	152-18020-3	••FITTING - FLAP TRACK ROLLER SUP• (REAR)		1

FIGURE AND INDEX NUMBER	GROUP WING MAJOR ASSEMBLY OUTER WING FLAP PART NUMBER	1234567 NOMENCLATURE	CODE	UNITS PER ASSY
23 -	177-18001-69	•ANGLE - FLAP STA 75 LEADING EDGE		1
	151-18077-1	•RIB ASSY - PORT FLAP STA 77 LEADING EDGE		1
	151-18077-2	•RIB ASSY - STARBOARD FLAP STA 77 LE		1
-55	151-18077-3	••RIB - PORT FLAP STA 77 LEADING EDGE		1
	151-18077-4	••RIB - STARBOARD FLAP STA 77 LEADING EDGE		1
	151-18078-1	••ANGLE - PORT FLAP LE RIB UP• REINFORCING		1
	151-18078-2	••ANGLE - STARBOARD FLAP LE RIB UPPER REINF		1
	151-18036-1	••ANGLE - PORT FLAP LE RIB LWR REINFORCING		1
	151-18036-2	••ANGLE - STARBOARD FLAP LE RIB LOWER REINF		1
	152-18020-9	••FITTING - FLAP TRACK ROLLER SUPPORT (FORWARD)		1
	152-18020-5	••FITTING - FLAP TRACK ROLLER SUP• (REAR)		1
	140-18046	••BRACKET ASSY - FLAP TRACK ROLLER ADJ LOCK		1
	177-18001-69	•ANGLE - FLAP STA 77 LEADING EDGE		1
-56	151-18041	•STRIP - WING OUTER PANEL FLAP TRACK SIDE LOAD CHAFING (FORWARD)		2
	151-18042-3	•SHIM - WING OUTER PANEL FLAP TRACK SIDE LOAD CHAFING STRIP		2
	151-18042-5	•SHIM - WING OUTER PANEL FLAP TRACK SIDE LOAD CHAFING STRIP		4
-57	AN509-10R12	•SCREW - (SHIM ATTACHING)		2
	AN364-1032	•NUT -		2
	140-18015	•BOLT - FLAP ROLLER ADJUSTING MPI		2
	AN960D716L	•WASHER -		2
	2W1-25-20-71	•WASHER - PLAIN (NAA)		2
-58	LSS6B	•BEARING - UNIBAL SPHERICAL (HEC) OR		4
	HA6R1	•BEARING - (HEC) OR		
	HA6R2	•BEARING - (HEC)		
	2W1-21-18-71	•WASHER - PLAIN (NAA)		2
	AN365-524	•NUT -		2
	140-18047	•LOCK - FLAP ROLLER ADJUSTING BOLT		2
	AN3-5A	•BOLT - (FLAP ROLLER ADJUSTING)		2
	2W1-12-16-64	•WASHER - PLAIN (NAA)		2
	AN6-21A	•BOLT - MPI (FLAP ROLLER ADJUSTING)		2
	2W1-25-20-71	•WASHER - PLAIN (NAA)		4
	AN960D616L	•WASHER -		2
	AN365-624	•NUT -		2
	151-18175-1	•RIB ASSY - PORT FLAP STA 75 TRAILING EDGE		1
	151-18175-2	•RIB ASSY - STARBOARD FLAP STA 75 TE		1
-59	151-18175-3	••RIB - PORT FLAP STA 75 TRAILING EDGE		1
	151-18175-4	••RIB - STARBOARD FLAP STA 75 TRAILING EDGE		1
	151-18135-5	••ANGLE - PORT FLAP TE RIB UP• REINFORCING		1
	151-18135-6	••ANGLE - STARBOARD FLAP TE RIB UPPER REINF		1
	151-18136-5	••ANGLE - PORT FLAP TE RIB LWR REINFORCING		1
	151-18136-6	••ANGLE - STARBOARD FLAP TE RIB LOWER REINF		1
	151-18137-1	••CHANNEL - PORT FLAP TRALING EDGE RIB		1
	151-18137-2	••CHANNEL - STARBOARD FLAP TE RIB		1
	177-18001-97	•FORMER - PORT FLAP STA 75 TRAILING EDGE		1
	177-18001-98	•FORMER - STARBOARD FLAP STA 75 TE		1
	151-18177-1	•RIB ASSY - PORT FLAP STA 77 TRAILING EDGE		1
	151-18177-2	•RIB ASSY - STARBOARD FLAP STA 77 TE		1
-60	151-18177-3	••RIB - PORT FLAP STA 77 TRAILING EDGE		1
	151-18177-4	••RIB - STARBOARD FLAP STA 77 TRAILING EDGE		1
	151-18135-5	••ANGLE - PORT FLAP TE RIB UP• REINFORCING		1
	151-18135-6	••ANGLE - STARBOARD FLAP TE RIB UPPER REINF		1
	151-18136-5	••ANGLE - PORT FLAP TE RIB LWR REINFORCING		1
	151-18136-6	••ANGLE - STARBOARD FLAP TE RIB LOWER REINF		1
	151-18137-1	••CHANNEL - PORT FLAP TRAILING EDGE RIB		1

FIGURE AND INDEX NUMBER	GROUP WING MAJOR ASSEMBLY OUTER WING FLAP PART NUMBER	1234567 NOMENCLATURE	CODE	UNITS PER ASSY
23 -	151-18137-2	••CHANNEL - STARBOARD FLAP TE RIB		1
	177-18001-98	•FORMER - FLAP STA 77 TE RH (PORT SIDE)		1
	177-18001-97	•FORMER - FLAP STA 77 TE LH (STBD SIDE)		1
-61	177-18001-49	•RIB - PORT FLAP STA 86 LEADING EDGE		1
	177-18001-50	•RIB - STARBOARD FLAP STA 86 LEADING EDGE		1
	2C21-2	•CLIP - (NAA)		1
	177-18001-79	•ANGLE - FLAP STA 86 LEADING EDGE		1
-62	177-18001-135	•STRINGER - PORT FLAP STA 84-95 LOWER		1
	177-18001-136	•STRINGER - STARBOARD FLAP STA 84-95 LOWER		1
	2C21-2	•CLIP - (NAA)		1
-63	177-18001-83	•RIB - PORT FLAP STA 86 TRAILING EDGE		1
	177-18001-84	•RIB - STARBOARD FLAP STA 86 TRAILING EDGE		1
	2C21-2	•CLIP - (NAA)		12
	177-18001-99	•FORMER - PORT FLAP STA 86 TRAILING EDGE		1
	177-18001-100	•FORMER - STARBOARD FLAP STA 86 TE		1
-64	177-18001-53	•RIB - PORT FLAP STA 95		1
	177-18001-54	•RIB - STARBOARD FLAP STA 95		1
-65	177-18001-9	•TRAILING EDGE - OUTER WING FLAP		1
	177-18001-139	•ANGLE - FLAP STA 95 TRAILING EDGE		1
	165-18008	•SPACER - FLAP STA 95 TRAILING EDGE		1
-66	AN7510-1	•PLATE -		1
-67	177-18001-3	•SKIN - PORT FLAP LEADING EDGE		1
	177-18001-4	•SKIN - STARBOARD FLAP LEADING EDGE		1
-68	151-18031	•DOUBLER - FLAP TRACK ROLLER STA 36-40 & STA 69-74		2
-69	177-18001-19	•DOUBLER - PORT FLAP STA 28 LOWER INBOARD (FLAP ACCESS DOOR)		1
	177-18001-20	•DOUBLER - STARBOARD FLAP STA 28 LOWER INBD (FLAP ACCESS DOOR)		1
-70	177-18001-19	•DOUBLER - PORT FLAP STA 81 LOWER OUTBOARD (FLAP ACCESS DOOR)		1
	177-18001-20	•DOUBLER - STARBOARD FLAP STA 81 LWR OUTBD (FLAP ACCESS DOOR)		1
	177-18001-21	•SHIM - PORT FLAP STA 81		1
	177-18001-22	•SHIM - STARBOARD FLAP STA 81		1
-71	177-18001-107	•SKIN - PORT FLAP LEADING EDGE		1
	177-18001-108	•SKIN - STARBOARD FLAP LEADING EDGE		1
-72	177-18001-5	•SKIN - PORT FLAP UPPER	001-662	1
	177-18001-803	•SKIN - PORT FLAP UPPER	663-	1
	177-18001-6	•SKIN - STARBOARD FLAP UPPER	001-662	1
	177-18001-804	•SKIN - STARBOARD FLAP UPPER	663-	1
-73	177-18001-11	•SKIN - PORT FLAP LOWER		1
	177-18001-8	•SKIN - STARBOARD FLAP LOWER		1
-74	140-18021	•DOOR - FLAP ACCESS		2
-75	7S13-1032C16	•SCREW - 100-DEG FLUSH HEAD (NAA) (ACCESS DOOR ATTACHING)		2
	AN960D10	•WASHER -		2
	AN380-2-2	•COTTER-PIN -		2
-76	AN509-10-9	•SCREW - (FLAP ACCESS DOOR)		10
-77	151-18030	•DOOR - FLAP TRACK ROLLER ACCESS STA 38-71		2
-78	7S13-1032C16	•SCREW - 100-DEG FLUSH HEAD (NAA) (FLAP TRACK ROLLER ACCESS DOOR ATT)		2
	AN960D10	•WASHER -		2
	AN380-2-2	•COTTER-PIN -		2
	AN509-10R9	•SCREW - (FLAP TRACK ROLLER ACC DOOR ATT)		18
-79	151-18128-11	TRACK ASSY - FLAP INBOARD (SEE FIG. 6)		REF
-80	151-18011-11	TRACK ASSY - FLAP OUTBOARD (SEE FIG. 6)		REF
-81	M-3320	ACTUATOR - WING FLAP (AAI) (SEE SECT. 7)		REF
-82	170-58297	TUBE - SURFACE CONTROL HYDRAULIC VENT (SEE SECTION 11)		REF
		(CONTINUED SEE SECTION 11)		

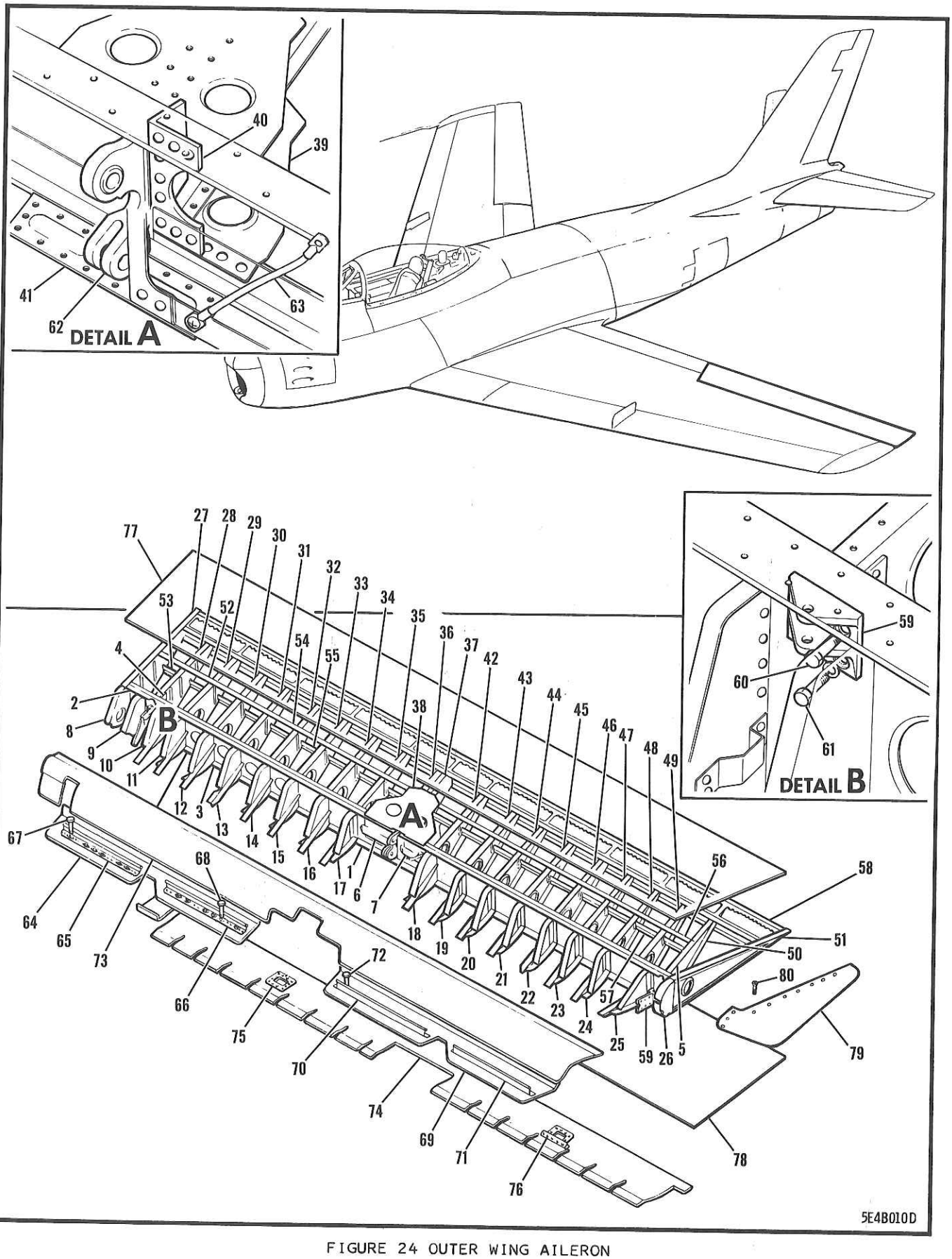

FIGURE 24 OUTER WING AILERON

FIGURE AND INDEX NUMBER	GROUP / MAJOR ASSEMBLY / PART NUMBER	WING / OUTER WING AILERON / 1234567 NOMENCLATURE	CODE	UNITS PER ASSY
24 -	165-16001-1	AILERON ASSY - COMPLETE PORT (SEE FIG. 6)	001-699	1
		OR		
	165-16001-805	AILERON ASSY - COMPLETE PORT	693-699	
		OR		
	165-16001-811	AILERON ASSY - COMPLETE PORT	693-699	
		OR		
	165-16001-813	AILERON ASSY - COMPLETE PORT	001-699	
	165-16001-807	AILERON ASSY - COMPLETE PORT (SERVICE EFFECTIVITY 001-699)	700-	1
		OR		
	165-16001-815	AILERON ASSY - COMPLETE PORT (165-16001-807 REIDENTIFIED AFTER REWORK)		
		OR		
	165-16001-903	AILERON ASSY - COMPLETE PORT	001-699	
	165-16001-2	AILERON ASSY - COMPLETE STBD (SEE FIG. 6)	001-699	1
		OR		
	165-16001-806	AILERON ASSY - COMPLETE STARBOARD	693-699	
		OR		
	165-16001-812	AILERON ASSY - COMPLETE STARBOARD	693-699	
		OR		
	165-16001-814	AILERON ASSY - COMPLETE STARBOARD	001-699	
	165-16001-808	AILERON ASSY - COMPLETE STARBOARD (SERVICE EFFECTIVITY 001-699)	700-	1
		OR		
	165-16001-816	AILERON ASSY - COMPLETE STARBOARD		
		OR		
	165-16001-904	AILERON ASSY - COMPLETE STARBOARD	001-699	
	165-16003-1	.SEAL INSTL - PORT AILERON COUNTERBALANCE & (SEE FIG. 25)		REF
	165-16003-2	.SEAL INSTL - STBD AILERON COUNTERBALANCE & (SEE FIG. 25)		REF
	165-16002-1	.AILERON ASSY - COVERED PORT	001-699	1
	165-16002-815	.AILERON ASSY - COVERED PORT	700-	1
		OR		
	165-16002-817	.AILERON ASSY - COVERED PORT		
		OR		
	165-16002-903	.AILERON ASSY - COVERED PORT	001-699	
	165-16002-2	.AILERON ASSY - COVERED STARBOARD	001-699	1
	165-16002-816	.AILERON ASSY - COVERED STARBOARD	700-	1
		OR		
	165-16002-818	.AILERON ASSY - COVERED STARBOARD		
		OR		
	165-16002-904	.AILERON ASSY - COVERED STARBOARD	001-699	
	165-16005-1	..SPAR ASSY - PORT AILERON FORWARD		1
	165-16005-2	..SPAR ASSY - STARBOARD AILERON FORWARD		1
- 1	165-16005-7	...WEB - AILERON FORWARD SPAR		1
- 2	165-16005-3	...CAP - PORT AILERON FWD SPAR (UPPER)		1
	165-16005-4	...CAP - STARBOARD AILERON FWD SPAR (UPPER)		1
- 3	165-16005-5	...CAP - PORT AILERON FORWARD SPAR (LOWER)		1
	165-16005-6	...CAP - STARBOARD AILERON FWD SPAR (LOWER)		1
	165-16005-101	...DOUBLER - AILERON FORWARD SPAR		1
- 4	165-16005-97	...FITTING ASSY - FORWARD SPAR (INBOARD HINGE TEE)		1
	165-16005-93	....TEE - FORWARD SPAR (INBD HINGE FITTING)		1
- 5	165-16005-99	...FITTING ASSY - FORWARD SPAR (OUTBOARD HINGE TEE)		1
	165-16005-83	....TEE - FORWARD SPAR (OUTBD HINGE FTG)		1
	165-16005-89	...ANGLE - PORT AILERON FWD SPAR STA 49-63		1
	165-16005-90	...ANGLE - STBD AILERON FWD SPAR STA 49-63		1
	165-16005-91	...ANGLE - PORT AILERON FWD SPAR STA 49-63		1
	165-16005-92	...ANGLE - STBD AILERON FWD SPAR STA 49-63		1
	165-16005-87	...ANGLE - AILERON FORWARD SPAR STA 52-61		2
	165-16005-11	...ANGLE - AILERON FORWARD SPAR STA 116		1
	165-16005-15	...ANGLE - AILERON FORWARD SPAR STA 116		1
- 6	165-16002-53	..INTERCOSTAL - PORT AILERON (FWD INBOARD)		1
	165-16002-54	..INTERCOSTAL - STBD AILERON (FWD INBOARD)		1
- 7	165-16002-55	..INTERCOSTAL - PORT AILERON (FWD OUTBOARD)		1

FIGURE AND INDEX NUMBER	GROUP / MAJOR ASSEMBLY / PART NUMBER	WING / OUTER WING AILERON / 1234567 NOMENCLATURE	CODE	UNITS PER ASSY
24 -	165-16002-56	••INTERCOSTAL - STBD AILERON (FWD OUTBOARD)		1
- 8	165-16413-1	••RIB - PORT AILERON LE CANTED STA 1		1
	165-16413-2	••RIB - STARBOARD AILERON LE CANTED STA 1		1
- 9	165-16410-1	••RIB ASSY - PORT AILERON LE STA 5		1
	165-16410-2	••RIB ASSY - STARBOARD AILERON LE STA 5		1
	165-16002-35	••ANGLE - AILERON LEADING EDGE STA 5 (PORT)		1
-10	165-16409-1	••RIB ASSY - PORT AILERON LE STA 9		1
	165-16409-2	••RIB ASSY - STARBOARD AILERON LE STA 9		1
	165-16409-5	•••ANGLE - PORT AILERON LEADING EDGE STA 9		1
	165-16409-6	•••ANGLE - STARBOARD AILERON LE STA 9		1
-11	165-16408-1	••RIB ASSY - PORT AILERON LE STA 13		1
	165-16408-2	••RIB ASSY - STARBOARD AILERON LE STA 13		1
	165-16408-5	•••ANGLE - PORT AILERON LEADING EDGE STA 13		1
	165-16408-6	•••ANGLE - STBD AILERON LEADING EDGE STA 13		1
-12	165-16411-1	••RIB ASSY - PORT AILERON LE STA 19		1
	165-16411-2	••RIB ASSY - STARBOARD AILERON LE STA 19		1
	165-16411-3	•••RIB - PORT AILERON LEADING EDGE STA 19		1
	165-16411-4	•••RIB - STBD AILERON LEADING EDGE STA 19		1
	165-16411-5	•••ANGLE - PORT AILERON LE STA 19 RIB		1
	165-16411-6	•••ANGLE - STARBOARD AILERON LE STA 19 RIB		1
-13	165-16407-1	••RIB ASSY - PORT AILERON LE STA 25		1
	165-16407-2	••RIB ASSY - STARBOARD AILERON LE STA 25		1
	165-16407-3	•••RIB - PORT AILERON LEADING EDGE STA 25		1
	165-16407-4	•••RIB - STBD AILERON LEADING EDGE STA 25		1
	165-16407-7	•••TEE - PORT AIL. LEADING EDGE STA 25 RIB		1
	165-16407-8	•••TEE - STBD AIL. LEADING EDGE STA 25 RIB		1
-14	165-16406-1	••RIB ASSY - PORT AILERON LE STA 31		1
	165-16406-2	••RIB ASSY - STARBOARD AILERON LE STA 31		1
-15	165-16405-1	••RIB ASSY - PORT AILERON LE STA 37		1
	165-16405-2	••RIB ASSY - STARBOARD AILERON LE STA 37		1
-16	165-16414-1	••RIB ASSY - PORT AILERON LE STA 43		1
	165-16414-2	••RIB ASSY - STARBOARD AILERON LE STA 43		1
	165-16414-3	•••RIB - PORT AILERON LEADING EDGE STA 43		1
	165-16414-4	•••RIB - STBD AILERON LEADING EDGE STA 43		1
	165-16414-5	•••RIB - PORT AIL. LEADING EDGE STA 43		1
	165-16414-6	•••RIB - STBD AIL. LEADING EDGE STA 43		1
-17	165-16415-11	••RIB ASSY - PORT AILERON LE STA 49		1
	165-16415-12	••RIB ASSY - STARBOARD AILERON LE STA 49		1
-18	165-16402-11	••RIB ASSY - PORT AILERON LE STA 64		1
	165-16402-12	••RIB ASSY - STARBOARD AILERON LE STA 64		1
-19	165-16412-1	••RIB ASSY - PORT AILERON LE STA 70		1
	165-16412-2	••RIB ASSY - STARBOARD AILERON LE STA 70		1
-20	165-16416-1	••RIB ASSY - PORT AILERON LE STA 76		1
	165-16416-2	••RIB ASSY - STARBOARD AILERON LE STA 76		1
-21	165-16417-1	••RIB ASSY - PORT AILERON LE STA 83		1
	165-16417-2	••RIB ASSY - STARBOARD AILERON LE STA 83		1
-22	165-16418-1	••RIB ASSY - PORT AILERON LE STA 89		1
	165-16418-2	••RIB ASSY - STARBOARD AILERON LE STA 89		1
-23	165-16419-1	••RIB ASSY - PORT AILERON LE STA 95		1
	165-16419-2	••RIB ASSY - STARBOARD AILERON LE STA 95		1
	165-16419-3	•••RIB - PORT AILERON LEADING EDGE STA 95		1
	165-16419-4	•••RIB - STBD AILERON LEADING EDGE STA 95		1
	165-16419-5	•••ANGLE - PORT AILERON LE STA 95 RIB		1
	165-16419-6	•••ANGLE - STARBOARD AILERON LE STA 95 RIB		1
-24	165-16420-1	••RIB ASSY - PORT AILERON LE STA 102		1
	165-16420-2	••RIB ASSY - STARBOARD AILERON LE STA 102		1
	165-16420-3	•••RIB - PORT AILERON LEADING EDGE STA 102		1
	165-16420-4	•••RIB - STBD AILERON LEADING EDGE STA 102		1
	165-16420-5	•••ANGLE - PORT AILERON LE STA 102 RIB		1
	165-16420-6	•••ANGLE - STARBOARD AILERON LE STA 102 RIB		1
-25	165-16401-1	••RIB ASSY - PORT AILERON LE CANTED STA 112		1
	165-16401-2	••RIB ASSY - STBD AILERON LE CANTED STA 112		1
	165-16401-3	•••RIB - PORT AILERON LE CANTED STA 112		1
	165-16401-4	•••RIB - STBD AILERON LE CANTED STA 112		1
	165-16401-5	•••ANGLE - PORT AIL. LE CANTED STA 112 RIB		1
	165-16401-6	•••ANGLE - STBD AIL. LE CANTED STA 112 RIB		1
	165-16401-7	...CLIP - PORT AIL. LE CANTED STA 112 RIB		1

FIGURE AND INDEX NUMBER	GROUP / MAJOR ASSEMBLY / PART NUMBER	WING / OUTER WING AILERON / 1234567 NOMENCLATURE	CODE	UNITS PER ASSY
24 -	165-16401-8	•••CLIP - STBD AIL• LE CANTED STA 112 RIB		1
-26	165-16421-1	••RIB - PORT AILERON LEADING EDGE STA 116		1
	165-16421-2	••RIB - STBD AILERON LEADING EDGE STA 116		1
-27	165-16128-1	••RIB ASSY - PORT AILERON REAR CANTED STA 1		1
	165-16128-2	••RIB ASSY - STBD AILERON REAR CANTED STA 1		1
	165-16002-5	••DOUBLER - AILERON REAR CANTED STA 1		2
-28	165-16112-1	••RIB - PORT AILERON STA 7 (REAR)		1
	165-16112-2	••RIB - STARBOARD AILERON STA 7 (REAR)		1
-29	165-16141-1	••RIB - PORT AILERON STA 13 (REAR)		1
	165-16141-2	••RIB - STARBOARD AILERON STA 13 (REAR)		1
-30	165-16140-1	••RIB - PORT AILERON STA 19 (REAR)		1
	165-16140-2	••RIB - STARBOARD AILERON STA 19 (REAR)		1
-31	165-16139-1	••RIB - PORT AILERON STA 25 (REAR)		1
	165-16139-2	••RIB - STARBOARD AILERON STA 25 (REAR)		1
-32	165-16130-1	••RIB - PORT AILERON STA 31 (REAR)		1
	165-16130-2	••RIB - STARBOARD AILERON STA 31 (REAR)		1
-33	165-16126-1	••RIB - PORT AILERON STA 37 (REAR)		1
	165-16126-2	••RIB - STARBOARD AILERON STA 37 (REAR)		1
-34	165-16127-1	••RIB - PORT AILERON STA 43 (REAR)		1
	165-16127-2	••RIB - STARBOARD AILERON STA 43 (REAR)		1
-35	165-16119-1	••RIB - PORT AILERON STA 49 (REAR)		1
	165-16119-2	••RIB - STARBOARD AILERON STA 49 (REAR)		1
-36	165-16114-1	••RIB - PORT AILERON STA 56 HINGE (REAR)		1
	165-16114-2	••RIB - STBD AILERON STA 56 HINGE (REAR)		1
-37	165-16115-1	••RIB - PORT AILERON STA 57 HINGE (REAR)		1
	165-16115-2	••RIB - STBD AILERON STA 57 HINGE (REAR)		1
-38	165-16422	••DOUBLER - AILERON CENTRE HINGE UP• STA 56		1
-39	165-16423	••DOUBLER - AILERON CENTRE HINGE LWR STA 56		1
	165-16002-21	••SPACER - AILERON STA 56 (REAR RIB)		2
-40	165-16014	••DOUBLER - AIL• CTR HINGE CUT-OUT LWR SKIN		1
	165-16424-3	••ANGLE - AILERON CENTRE HINGE ATTACHING	001-699	1
		OR		
	165-16424-807	••ANGLE - AILERON CENTRE HINGE ATTACHING	001-699	
	165-16424-803	••ANGLE - AILERON CENTRE HINGE ATTACHING	700-	1
-41	165-16424-5	••ANGLE - AILERON CENTRE HINGE ATTACHING	001-699	1
		OR		
	165-16424-809	••ANGLE - AILERON CENTRE HINGE ATTACHING	001-699	
	165-16424-805	••ANGLE - AILERON CENTRE HINGE ATTACHING	700-	1
	NAS464P3-11A	••SHEAR-BOLT - (ATT HINGE ANGLE TO RIB)	700-	7
	NAS464P3-7A	••SHEAR-BOLT - (ATT HINGE ANGLE TO RIB)	700-	6
	AN960D10	••WASHER -	700-	13
	AN365-1032	••NUT -	700-	13
-42	165-16129-1	••RIB - PORT AILERON STA 64 (REAR)		1
	165-16129-2	••RIB - STARBOARD AILERON STA 64 (REAR)		1
-43	165-16131-1	••RIB - PORT AILERON STA 70 (REAR)		1
	165-16131-2	••RIB - STARBOARD AILERON STA 70 (REAR)		1
-44	165-16132-1	••RIB - PORT AILERON STA 76 (REAR)		1
	165-16132-2	••RIB - STARBOARD AILERON STA 76 (REAR)		1
-45	165-16133-1	••RIB - PORT AILERON STA 83 (REAR)		1
	165-16133-2	••RIB - STARBOARD AILERON STA 83 (REAR)		1
-46	165-16138-1	••RIB - PORT AILERON STA 89 (REAR)		1
	165-16138-2	••RIB - STARBOARD AILERON STA 89 (REAR)		1
-47	165-16135-1	••RIB - PORT AILERON STA 95 (REAR)		1
	165-16135-2	••RIB - STARBOARD AILERON STA 95 (REAR)		1
-48	165-16136-1	••RIB - PORT AILERON STA 102 (REAR)		1
	165-16136-2	••RIB - STARBOARD AILERON STA 102 (REAR)		1
-49	165-16137-1	••RIB - PORT AILERON STA 108 (REAR)		1
	165-16137-2	••RIB - STARBOARD AILERON STA 108 (REAR)		1
-50	165-16116-1	••RIB - PORT AILERON STA 114 (REAR)		1
	165-16116-2	••RIB - STARBOARD AILERON STA 114 (REAR)		1
-51	165-16117-1	••RIB ASSY - PORT AIL• STA 114 CANTED(REAR)		1

FIGURE AND INDEX NUMBER	GROUP WING MAJOR ASSEMBLY OUTER WING AILERON PART NUMBER	1234567 NOMENCLATURE	CODE	UNITS PER ASSY
24 -	165-16117-2	••RIB ASSY - STBD AIL• STA 114 CANTED(REAR)		1
	165-16002-37	••CLIP - AILERON STA 114 (REAR)		1
-52	165-16002-31	••STRINGER - PORT AIL• STA 1-7 (REAR UPPER) (MAKE FROM 1S3 X 4-15/16 (NAA))		1
	165-16002-32	••STRINGER - STBD AIL• STA 1-7 (REAR LOWER) (MAKE FROM 1S3 X 4-15/16 (NAA))		1
-53	165-16002-33	••STRINGER - PORT AIL• STA 1-7 (REAR LOWER) (MAKE FROM 1S3 X 51 (NAA))		1
	165-16002-34	••STRINGER - STBD AIL• STA 1-7 (REAR LOWER) (MAKE FROM 1S3 X 51 (NAA))		1
	165-16002-49	••CLIP - AILERON LH (PORT WING)		2
	165-16002-50	••CLIP - AILERON RH (STARBOARD WING)		2
	165-16002-50	••CLIP - AILERON RH (PORT WING)		6
	165-16002-49	••CLIP - AILERON LH (STARBOARD WING)		6
	165-16002-51	••CLIP - PORT AILERON STA 56		4
	165-16002-52	••CLIP - STARBOARD AILERON STA 56		4
-54	165-16002-27	••STRINGER - PORT AIL• STA 7-56 (REAR UP•) (MAKE FROM 1S3 X 50 (NAA))		1
	165-16002-28	••STRINGER - STBD AIL• STA 7-56 (REAR UP•) (MAKE FROM 1S3 X 50 (NAA))		1
-55	165-16002-29	••STRINGER - PORT AIL• STA 7-56 (REAR LWR) (MAKE FROM 1S3 X 50 (NAA))		1
	165-16002-30	••STRINGER - STBD AIL• STA 7-56 (REAR LWR) (MAKE FROM 1S3 X 50 (NAA))		1
-56	165-16002-25	••STRINGER - PORT AIL• STA 56-114(REAR UP•) (MAKE FROM 1S3 X 57-17/32 (NAA))		1
	165-16002-26	••STRINGER - STBD AIL• STA 56-114(REAR UP•) (MAKE FROM 1S3 X 57-17/32 (NAA))		1
-57	165-16002-23	••STRINGER - PORT AIL• STA 56-114(REAR LWR) (MAKE FROM 1S3 X 57-17/32 (NAA))		1
	165-16002-24	••STRINGER - STBD AIL• STA 56-114(REAR LWR) (MAKE FROM 1S3 X 57-17/32 (NAA))		1
-58	165-16113	••TRAILING EDGE - WING AILERON		1
-59	203-16008	••FITTING - AILERON OUTBD & INBD REAR HINGE (AS PER EO 05-5E-6A/158)		2
-60	AN4-6A	••BOLT - MPI (HINGE FITTING ATTACHING)		2
-61	AN4-7A	••BOLT - MPI (HINGE FITTING ATTACHING)		2
	AN960D416	••WASHER -		2
-62	165-16169-5	••FITTING - AILERON SPAR CENTRE HINGE	001-699	1
	165-16169-805	••FITTING - AILERON SPAR CENTRE HINGE MPI (MAKE FROM 165-16169-800)	700-	1
-63	6043-3-3-5	••JUMPER - (JNI) (BONDING)		1
-64	165-16515-1	••PADDLE - PORT AILERON LEADING EDGE INBD		1
	165-16515-2	••PADDLE - STBD AILERON LEADING EDGE INBD		1
-65	165-16517-3	••STIFFENER - PORT AILERON PADDLE LE (INBOARD STA 9-25)		1
	165-16517-4	••STIFFENER - STARBOARD AILERON PADDLE LE (INBOARD STA 9-25)		1
-66	165-16517-5	••STIFFENER - PORT AILERON PADDLE LE (OUTBOARD STA 31-49)		1
	165-16517-6	••STIFFENER - STARBOARD AILERON PADDLE LE (OUTBOARD STA 31-49)		1
-67	AN3-5A	••BOLT - (ON 165-16517-3 & -4)	001-490	5
	6800-02	••RETAINER - TWO-LUG BOLT (NSC)	001-490	5
-68	AN3-5A	••BOLT - (ON 165-16517-5 & -6) (FOR UPPER CODE SEE FIG• 25)	001-490	6
	6820-02	••RETAINER - CORNER TYPE BOLT (NSC)	001-490	6
-69	165-16516-1	••PADDLE - PORT AILERON LEADING EDGE OUTBD		1
	165-16516-2	••PADDLE - STARBOARD AILERON LE OUTBOARD		1
-70	165-16517-7	••STIFFENER - PORT AILERON PADDLE LE (OUTBOARD STA 64-82)		1

FIGURE AND INDEX NUMBER	GROUP / MAJOR ASSEMBLY / PART NUMBER	WING / OUTER WING AILERON / 1234567 NOMENCLATURE	CODE	UNITS PER ASSY
24 -	165-16517-8	••STIFFENER - STARBOARD AILERON PADDLE LE (OUTBOARD STA 64-82)		1
-71	165-16517-9	••STIFFENER - PORT AILERON PADDLE LE (OUTBOARD STA 89-111)		1
	165-16517-10	••STIFFENER - STARBOARD AILERON PADDLE LE (OUTBOARD STA 89-111)		1
-72	5B17C5A	••BOLT - CORROSION-RESISTANT (10-32) (NAA) (FOR UPPER CODE SEE FIG. 25)	001-490	12
	5800-02	••RETAINER - TWO-LUG BOLT (NSC)	001-490	12
		OR		
	6800D-02	••RETAINER - TWO-LUG BOLT (NSC)	001-490	
	AN960D10	••WASHER -		1
	NAS221-8	••SCREW -		1
	AN315-3	••NUT -		1
		OR		
	AN365-1032	••NUT -		
-73	165-16002-9	••SKIN - PORT AIL. LE TO SPAR PLANE UPPER		1
	165-16002-10	••SKIN - STBD AIL. LE TO SPAR PLANE UPPER		1
-74	165-16002-11	••SKIN - PORT AILERON LE TO SPAR PLANE LWR		1
	165-16002-955	••SPARE PART FOR 165-16002-11		
	165-16002-12	••SKIN - STBD AIL. LE TO SPAR PLANE LOWER		1
	165-16002-956	••SPARE PART FOR 165-16002-12		
-75	165-16002-13	••DOUBLER - AILERON LEADING EDGE TO SPAR PLANE LOWER STA 28		1
-76	165-16002-15	••DOUBLER - AILERON LEADING EDGE TO SPAR PLANE LOWER STA 88		1
-77	165-16002-3	••SKIN - PORT AIL. SPAR PLANE TO TEE UPPER		1
	165-16002-4	••SKIN - STBD AIL. SPAR PLANE TO TEE UPPER		1
-78	165-16002-7	••SKIN - PORT AIL. SPAR PLANE TO TEE LOWER		1
	165-16002-8	••SKIN - STBD AIL. SPAR PLANE TO TEE LOWER		1
-79	165-16218-1	••TIP ASSY - PORT AILERON		1
	165-16218-2	••TIP ASSY - STARBOARD AILERON		1
	165-16218-3	•••SKIN - PORT AILERON TIP UPPER		1
	165-16218-4	•••SKIN - STARBOARD AILERON TIP UPPER		1
	165-16218-5	•••SKIN - PORT AILERON TIP LOWER		1
	165-16218-6	•••SKIN - STARBOARD AILERON TIP LOWER		1
-80	7S16-8-7	••SCREW - 100-DEG FLUSH HEAD (NAA) (ATTACHING AILERON TIP)		20
		OR		
	AN509P8-7	••SCREW -		
	2W10-4	••WASHER - COUNTERSUNK (NAA)		4
	AN363C832	••NUT -		6
	AN7510-1	••PLATE -	371-	1
	AN7510-1	•PLATE -	001-370	1

-000-

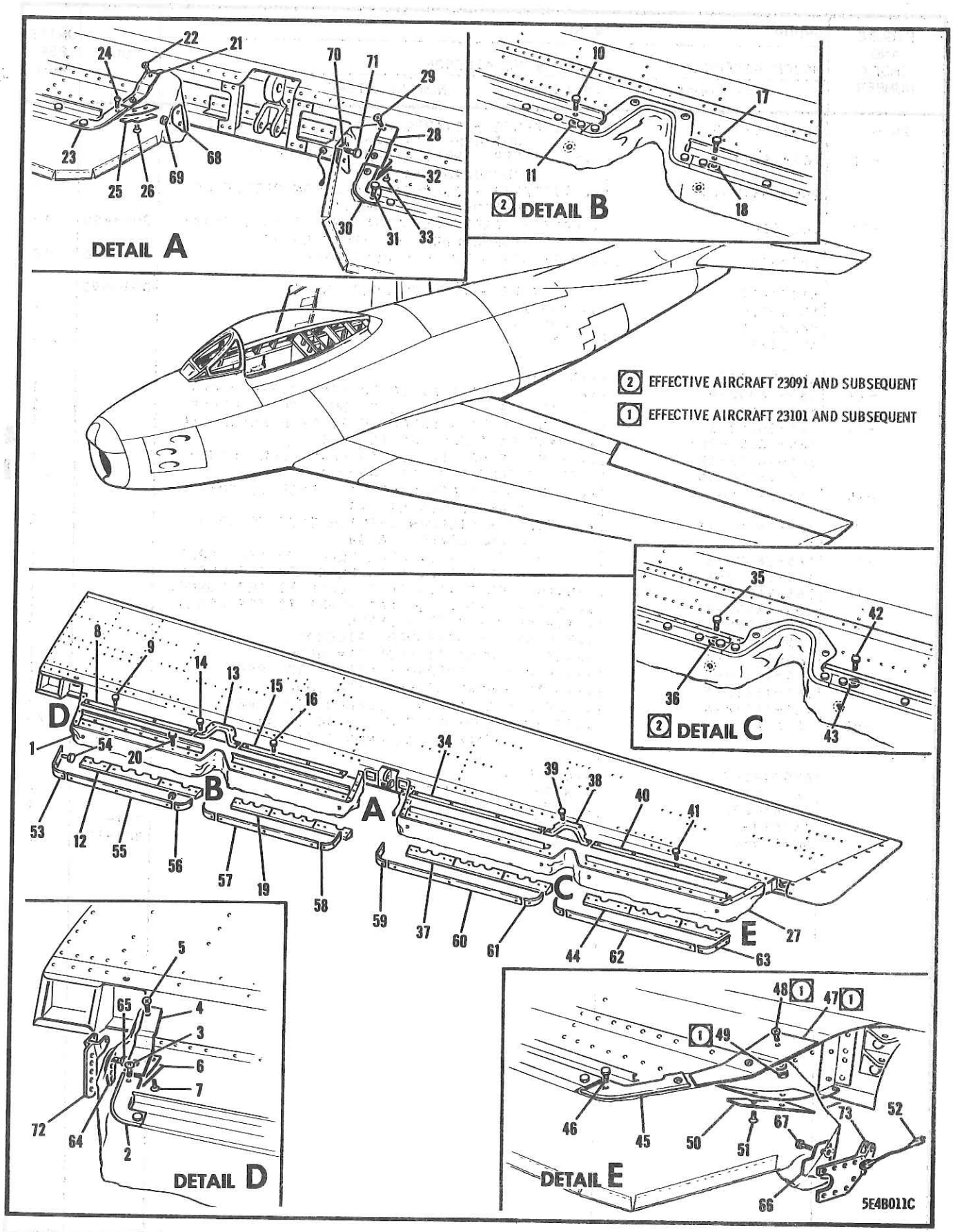

FIGURE 25 AILERON COUNTERBALANCE & SEAL

FIGURE AND INDEX NUMBER	GROUP / MAJOR ASSEMBLY / PART NUMBER	WING / AILERON COUNTERBALANCE & SEAL / 1234567 NOMENCLATURE	CODE	UNITS PER ASSY
25 -	165-16003-1	COUNTERBALANCE & SEAL INSTL - PORT AILERON (SEE FIG. 24)	001-699	NP
	165-16003-821	COUNTERBALANCE & SEAL INSTL - PORT AILERON	700-	NP
		OR		
	165-16003-823	COUNTERBALANCE & SEAL INSTL - PORT AILERON		
	165-16003-2	COUNTERBALANCE & SEAL INSTL - STBD AILERON (SEE FIG. 24)	001-699	NP
	165-16003-822	COUNTERBALANCE & SEAL INSTL - STBD AILERON	700-	NP
		OR		
	165-16003-824	COUNTERBALANCE & SEAL INSTL - STBD AILERON		
- 1	165-16004-1	•SEAL ASSY - PORT AILERON INBOARD		1
	165-16004-2	•SEAL ASSY - STARBOARD AILERON INBOARD		1
	165-16004-3	••SEAL - AILERON INBOARD	371-	2
	165-16004-4	••SEAL - AILERON INBOARD	371-	2
- 2	165-16015-1	•RETAINER ASSY - AILERON STA 8 PADDLE SEAL PORT SIDE		1
	165-16015-2	•RETAINER ASSY - AILERON STA 8 PADDLE SEAL STARBOARD SIDE		1
- 3	NAS221-8	•SCREW -		1
	AN3-10A	•BOLT -		1
	AN960D10L	•WASHER - (UNDER BOLT HEAD)		1
	S-1246AL13-16-32	•WASHER - PLAIN (CAN) (UNDER NUT) (AS PER EO 05-5E-6A/136)		1
	AN364-1032	•NUT -		1
- 4	165-16056-1	•RETAINER - PORT AILERON STA 8 RIB UPPER		1
	165-16056-2	•RETAINER - STARBOARD AILERON STA 8 RIB UP.		1
- 5	7S16-10-8	•SCREW - 100-DEG FLUSH HEAD CRE (NAA)		2
- 6	165-16055-1	•RETAINER - PORT AILERON STA 8 RIB LOWER		1
	165-16055-2	•RETAINER - STARBOARD AILRON STA 8 RIB LWR		1
- 7	7S16-10-8	•SCREW - 100-DEG FLUSH HEAD CRE (NAA)		2
- 8	165-16019-3	•RETAINER - PORT AILERON PADDLE SEAL	001-699	1
	165-16019-801	•RETAINER - PORT AILERON PADDLE SEAL	700-	1
	165-16019-4	•RETAINER - STARBOARD AILERON PADDLE SEAL	001-699	1
	165-16019-802	•RETAINER - STARBOARD AILERON PADDLE SEAL	700-	1
- 9	AN3-10A	•BOLT -		2
	AN960D10L	•WASHER - (UNDER BOLT HEAD)		1
	S-1246AL13-16-32	•WASHER - PLAIN (CAN) (UNDER NUT) (AS PER EO 05-5E-6A/136)		2
	AN364-1032	•NUT -		2
	AN3-3A	•BOLT -		2
	AN365-1032	•NUT -		2
-10	AN3-5A	•BOLT - (FOR LOWER CODE SEE FIG. 24)	491-	5
-11	2W16	•WASHER - BALANCE WEIGHT (NAA)		AR
	AN960D10	•WASHER -		AR
	AN960D10L	•WASHER -		5
	AN364-1032	•NUT -		5
-12	165-16023-1	•WEIGHT - PORT AILERON INBD INNER BALANCE	001-699	1
	165-16023-801	•WEIGHT - PORT AILERON INBOARD INNER BALANCE NAVY-L-16 LEAD	700-	1
		OR		
	165-16023-803	•WEIGHT - PORT AILERON INBD INNER BALANCE		
	165-16023-2	•WEIGHT - STARBOARD AIL. INBD INNER BALANCE	001-699	1
	165-16023-802	•WEIGHT - STARBOARD AILERON INBOARD INNER BALANCE NAVY-L-16 LEAD	700-	1
		OR		
	165-16023-804	•WEIGHT - STBD AILERON INBD INNER BALANCE		
	AN509-10R15	•SCREW -		2
	S-1246AL13-24-63	•WASHER - PLAIN (CAN) (UNDER PADDLE) (AS PER EO 05-5E-6A/136)		2
	S-1246AL13-16-32	•WASHER - PLAIN (CAN) (UNDER NUT) (AS PER EO 05-5E-6A/136)		2
	AN365-1032	•NUT -		2
-13	165-16016	•RETAINER - AILERON STA 28 PADDLE SEAL		1

FIGURE AND INDEX NUMBER	GROUP WING MAJOR ASSEMBLY AILERON COUNTERBALANCE & SEAL PART NUMBER	1234567 NOMENCLATURE	CODE	UNITS PER ASSY
25 -	NAS221-8	•SCREW -		2
	AN960D10	•WASHER -		2
	AN365-1032	•NUT -		2
-14	AN3-10A	•BOLT -		1
	AN3-6A	•BOLT -		1
	AN960D10L	•WASHER - (UNDER BOLT HEAD)		2
	S-1246AL13-16-32	•WASHER - PLAIN (CAN) (UNDER NUT) (AS PER EO 05-5E-6A/136)		2
	AN364-1032	•NUT -		2
-15	165-16019-5	•RETAINER - PORT AILERON PADDLE SEAL	001-699	1
	165-16019-803	•RETAINER - PORT AILERON PADDLE SEAL	700-	1
	165-16019-6	•RETAINER - STARBOARD AILERON PADDLE SEAL	001-699	1
	165-16019-804	•RETAINER - STARBOARD AILERON PADDLE SEAL	700-	1
	AN3-3A	•BOLT -		2
	AN365-1032	•NUT -		2
-16	AN3-6A	•BOLT -		2
	AN960D10	•WASHER - (UNDER HEAD)		2
	S-1246AL13-16-32	•WASHER - PLAIN (CAN) (UNDER NUT) (AS PER EO 05-5E-6A/136)		2
	AN364-1032	•NUT -		2
-17	AN3-5A	•BOLT - (FOR LOWER CODE SEE FIG. 24)	491-	6
-18	2W16	•WASHER - BALANCE WEIGHT (NAA)		AR
	AN960D10	•WASHER -		12
	AN960D10L	•WASHER -		6
	AN364-1032	•NUT -		6
-19	165-16024-1	•WEIGHT - PORT AILERON INBD OUTER BALANCE	001-699	1
	165-16024-801	•WEIGHT - PORT AILERON INBD OUTER BALANCE NAVY-L-16 LEAD	700-	1
	165-16024-2	•WEIGHT - STARBOARD AIL. INBD OUTER BALANCE	001-699	1
	165-16024-802	•WEIGHT - STARBOARD AILERON INBOARD OUTER BALANCE NAVY-L-16 LEAD	700-	1
-20	AN509-10R11	•SCREW -		3
	S-1246AL13-24-63	•WASHER - PLAIN (CAN) (UNDER PADDLE) (AS PER EO 05-5E-6A/136)		3
	S-1246AL13-16-32	•WASHER - PLAIN (CAN) (UNDER NUT) (AS PER EO 05-5E-6A/136)		3
	AN365-1032	•NUT -		3
-21	165-16058-1	•RETAINER - PORT AIL. STA 49 & 63 RIB UPPER		1
	165-16058-2	•RETAINER - STBD AIL. STA 49 & 63 RIB UPPER		1
-22	7S16-10-8	•SCREW - 100-DEG FLUSH HEAD CRE (NAA)		2
-23	165-16018-1	•RETAINER ASSY - PORT AILERON STA 49 & 63 PADDLE SEAL		1
	165-16018-2	•RETAINER ASSY - STARBOARD AILERON STA 49 & STA 63 PADDLE SEAL		1
-24	NAS221-8	•SCREW -		1
	AN3-6A	•BOLT -		1
	AN960D10	•WASHER - (UNDER HEAD)		1
	S-1246AL13-16-32	•WASHER - PLAIN (CAN) (UNDER NUT) (AS PER EO 05-5E-6A/136)		1
	AN364-1032	•NUT -		1
-25	165-16057-2	•RETAINER - PORT AILERON STA 49 & 63 RIB LOWER RH		1
	165-16057-1	•RETAINER - STARBOARD AILERON STA 49 & 63 RIB LOWER LH		1
-26	7S16-10-8	•SCREW - 100-DEG FLUSH HEAD CRE (NAA)		2
-27	165-16006-1	•SEAL ASSY - PORT AILERON OUTBOARD		1
	165-16006-2	•SEAL ASSY - STARBOARD AILERON OUTBOARD		1
	165-16006-3	••SEAL - PORT AILERON OUTBOARD	371-	1
	165-16006-4	••SEAL - STARBOARD AILERON OUTBOARD	371-	1
	165-16061-15	••STRIP - AILERON SEAL RUBBING		1

FIGURE AND INDEX NUMBER	GROUP / MAJOR ASSEMBLY / PART NUMBER	WING / AILERON COUNTERBALANCE & SEAL / 1234567 NOMENCLATURE	CODE	UNITS PER ASSY
25 -	165-16061-17	••STRIP - AILERON SEAL RUBBING		1
	165-16061-11	••STRIP - AILERON SEAL RUBBING		1
	165-16061-13	••STRIP - AILERON SEAL RUBBING		1
-28	165-16058-2	•RETAINER - PORT AILERON STA 49 & 63 RIB UPPER RH		1
	165-16058-1	•RETAINER - STARBOARD AILERON STA 49 & 63 RIB UPPER LH		1
-29	7S16-10-8	•SCREW - 100-DEG FLUSH HEAD CRE (NAA)		2
-30	165-16018-2	•RETAINER ASSY - PORT AILERON STA 49 & 63 PADDLE SEAL RH		1
	165-16018-1	•RETAINER ASSY - STARBOARD AILERON STA 49 & STA 63 PADDLE SEAL LH		1
	7S14-1032C8A	•SCREW - ROUNDHEAD CRE (NAA)		1
-31	5B17C5A	•BOLT - CORROSION-RESISTANT (10-32) (NAA)		1
	S-1246AL13-16-32	•WASHER - PLAIN (CAN) (UNDER NUT) (AS PER EO 05-5E-6A/136)		1
	AN364-1032	•NUT -		1
-32	165-16057-1	•RETAINER - PORT AIL• STA 49 & 63 RIB LOWER		1
	165-16057-2	•RETAINER - STBD AIL• STA 49 & 63 RIB LOWER		1
-33	7S16-10-8	•SCREW - 100-DEG FLUSH HEAD CRE (NAA)		2
-34	165-16019-7	•RETAINER - PORT AILERON PADDLE SEAL	001-699	1
	165-16019-805	•RETAINER - PORT AILERON PADDLE SEAL	700-	1
	165-16019-8	•RETAINER - STARBOARD AILERON PADDLE SEAL	001-699	1
	165-16019-806	•RETAINER - STARBOARD AILERON PADDLE SEAL	700-	1
	5B17C3A	•BOLT - CORROSION-RESISTANT (10-32) (NAA) OR		2
	5B17C4A	•BOLT - CORROSION-RESISTANT (10-32) (NAA)		
	5B17C5A	•BOLT - CORROSION-RESISTANT (10-32) (NAA) OR		2
	5B17C4A	•BOLT - CORROSION-RESISTANT (10-32) (NAA)		
	S-1246AL13-16-32	•WASHER - PLAIN (CAN) (UNDER NUT) (EFFECTIVE 23001-23662 AS PER EO 05-5E-6A/136)	663-	2
	AN363C1032	•NUT -		2
	AN364-1032	•NUT -		2
-35	5B17C5A	•BOLT - CORROSION-RESISTANT (10-32) (NAA) (FOR LOWER CODE SEE FIG• 24)	491-	6
-36	2W16	•WASHER - BALANCE WEIGHT (NAA)		AR
	AN960D10	•WASHER -		12
	AN960D10L	•WASHER -		6
	AN364-1032	•NUT -		6
-37	165-16025-1	•WEIGHT - PORT AILERON OUTBD INNER BALANCE	001-699	1
	165-16025-803	•WEIGHT - PORT AILERON OUTBD INNER BALANCE NAVY-L-16 LEAD	700-	1
	165-16025-2	•WEIGHT - STBD AILERON OUTBD INNER BALANCE	001-699	1
	165-16025-804	•WEIGHT - STARBOARD AILERON OUTBOARD INNER BAL NAVY-L-16 LEAD	700-	1
	7S16-10-10	•SCREW - 100-DEG FLUSH HEAD CRE (NAA)		3
	S-1246AL13-24-63	•WASHER - PLAIN (CAN) (1 UNDER PADDLE) (AS PER EO 05-5E-6A/136)		3
	S-1246AL13-16-32	•WASHER - PLAIN (CAN) (1 UNDER NUT) (AS PER EO 05-5E-6A/136)		3
	AN364-1032	•NUT -		3
-38	165-16120	•RETAINER - AILERON STA 85 PADDLE SEAL		1
-39	7S14-1032C8A	•SCREW - ROUNDHEAD CRE (NAA) OR		2
	7S14-1032C9A	•SCREW - ROUNDHEAD CRE (NAA)		
	AN960D10	•WASHER -		2
	AN365-1032	•NUT -		2
	5B17C5A	•BOLT - CORROSION-RESISTANT (10-32) (NAA)		2
	AN960D10L	•WASHER -		1
	S-1246AL13-24-32	•WASHER - PLAIN (CAN) (UNDER BOLT HEAD) (AS PER EO 05-5E-6A/136)		2
	AN364-1032	•NUT -		1
-40	165-16019-9	•RETAINER - PORT AILERON PADDLE SEAL	001-699	1
	165-16019-807	•RETAINER - PORT AILERON PADDLE SEAL	700-	1

FIGURE AND INDEX NUMBER	GROUP / MAJOR ASSEMBLY / PART NUMBER	WING / AILERON COUNTERBALANCE & SEAL / 1234567 NOMENCLATURE	CODE	UNITS PER ASSY
25 -	165-16019-10	•RETAINER - STARBOARD AILERON PADDLE SEAL	001-699	1
	165-16019-808	•RETAINER - STARBOARD AILERON PADDLE SEAL	700-	1
	5B17C3A	•BOLT - CORROSION-RESISTANT (10-32) (NAA)		2
-41	5B17C5A	•BOLT - CORROSION-RESISTANT (10-32) (NAA)		2
	AN960D10L	•WASHER - (UNDER BOLT HEAD)		2
	S-1246AL13-24-32	•WASHER - PLAIN (CAN) (UNDER NUT) (AS PER EO 05-5E-6A/136)		2
	AN363C1032	•NUT -		2
	AN364-1032	•NUT -		2
-42	5B17C5A	•BOLT - CORROSION-RESISTANT (10-32) (NAA) (FOR LOWER CODE SEE FIG. 24)	491-	6
-43	2W16	•WASHER - BALANCE WEIGHT (NAA)		AR
	AN960D10	•WASHER -		12
	AN960D10L	•WASHER -		6
	AN364-1032	•NUT -		6
-44	165-16028-1	•WEIGHT - PORT AILERON OUTBD OUTER BALANCE	001-699	1
	165-16028-801	•SPARE PART ASSY FOR 165-16028-1	001-699	
	165-16028-803	•WEIGHT - PORT AILERON OUTBD OUTER BALANCE NAVY-L-16 LEAD	700-	1
	165-16028-2	•WEIGHT - STBD AILERON OUTBD OUTER BALANCE	001-699	1
	165-16028-802	•SPARE PART ASSY FOR 165-16028-2	001-699	
	165-16028-804	•WEIGHT - STBD AILERON OUTBD OUTER BALANCE NAVY-L-16 LEAD	700-	1
	13B-15011	•SHIM INSTL - AILERON BALANCE WEIGHT OR	700-	NP
	13B-15011-800	•SHIM INSTL - AILERON BALANCE WEIGHT		
	13B-15011-21	••SHIM - AILERON BALANCE WEIGHT (ON 165-16023-801 & -802)		1
	13B-15011-23	••SHIM - AILERON BALANCE WEIGHT (ON 165-16023-801 & -802)		1
	13B-15011-25	••SHIM - AILERON BALANCE WEIGHT (ON 165-16023-801 & -802)		1
	13B-15011-15	••SHIM - AILERON BALANCE WEIGHT (ON 165-16024-801 & -802)		1
	13B-15011-17	••SHIM - AILERON BALANCE WEIGHT (ON 165-16024-801 & -802)		1
	13B-15011-19	••SHIM - AILERON BALANCE WEIGHT (ON 165-16024-801 & -802)		1
	13B-15011-9	••SHIM - AILERON BALANCE WEIGHT (ON 165-16025-803 & -804)		1
	13B-15011-11	••SHIM - AILERON BALANCE WEIGHT (ON 165-16025-803 & -804)		1
	13B-15011-13	••SHIM - AILERON BALANCE WEIGHT (ON 165-16025-803 & -804)		1
	13B-15011-3	••SHIM - AILERON BALANCE WEIGHT (ON 165-16028-803 & -804)		1
	13B-15011-5	••SHIM - AILERON BALANCE WEIGHT (ON 165-16028-803 & -804)		1
	13B-15011-7	••SHIM - AILERON BALANCE WEIGHT (ON 165-16028-803 & -804)		1
	7S16-10-8	•SCREW - 100-DEG FLUSH HEAD CRE (NAA)		3
	S-1246AL13-24-63	•WASHER - PLAIN (CAN) (UNDER PADDLE) (AS PER EO 05-5E-6A/136)		3
	S-1246AL13-24-32	•WASHER - PLAIN (CAN) (UNDER NUT) (AS PER EO 05-5E-6A/136)		3
	AN364-1032	•NUT -		3
-45	165-16017-1	•RETAINER ASSY - PORT AILERON STA 114 CANTED PADDLE SEAL		1
	165-16017-2	•RETAINER ASSY - STARBOARD AILERON STA 114 CANTED PADDLE SEAL		1
	7S14-1032C8A	•SCREW - ROUNDHEAD CRE (NAA)		1
-46	5B17C5A	•BOLT - CORROSION-RESISTANT (10-32) (NAA)		1

FIGURE AND INDEX NUMBER	GROUP WING MAJOR ASSEMBLY AILERON COUNTERBALANCE & SEAL PART NUMBER	1234567 NOMENCLATURE	CODE	UNITS PER ASSY
25 -	S-1246AL13-24-32	•WASHER - PLAIN (CAN) (UNDER NUT) (AS PER EO 05-5E-6A/136)		1
	AN364-1032	•NUT -		1
-47	165-16060-1	•RETAINER - PORT AILERON STA 114 CANTED RIB UPPER		1
	165-16060-2	•RETAINER - STARBOARD AILERON STA 114 CANTED RIB UPPER		1
-48	7S16-10-8	•SCREW - 100-DEG FLUSH HEAD CRE (NAA)		2
	AN960D10L	•WASHER -	101-	1
-49	AN364-1032	•NUT -	101-	1
-50	165-16059-1	•RETAINER - PORT AILERON STA 114 CANTED RIB LOWER		1
	165-16059-2	•RETAINER - STARBOARD AILERON STA 114 CANTED RIB LOWER		1
-51	7S16-10-8	•SCREW - 100-DEG FLUSH HEAD CRE (NAA)		2
-52	6043-4-3-4	•JUMPER - (JNI) (BONDING)	001-200	1
	6043-4-3-5	•JUMPER - (JNI) (BONDING)	201-	1
	165-16003-11	SEAL INSTL - PORT AILERON COUNTERBALANCE & (SEE FIG. 6)		NP
	165-16003-12	SEAL INSTL - STBD AILERON COUNTERBALANCE & (SEE FIG. 6)		NP
-53	165-16022-1	•STRIP - PORT AILERON SEAL STA 6 END RTNR		1
	165-16022-2	•STRIP - STBD AILERON SEAL STA 6 END RTNR		1
-54	AN3-3A	•BOLT -		1
	AN3-4A	•BOLT -		2
	AN365-1032	•NUT -		1
-55	165-16021-3	•STRIP - AILERON SEAL REAR RETAINER		1
	AN3-4A	•BOLT -		3
-56	165-16045-1	•STRIP - PORT AILERON SEAL STA 28 END RTNR		1
	165-16045-2	•STRIP - STBD AILERON SEAL STA 28 END RTNR		1
	165-16045-2	•STRIP - PORT AIL. SEAL STA 28 END RTNR RH		1
	165-16045-1	•STRIP - STBD AIL. SEAL STA 28 END RTNR LH		1
	AN3-4A	•BOLT -		4
	AN365-1032	•NUT -		2
-57	165-16021-5	•STRIP - AILERON SEAL REAR RETAINER		1
	AN3-4A	•BOLT -		3
-58	165-16026-2	•STRIP - PORT AILERON SEAL STA 50 & 62 RETAINER RH		1
	165-16026-1	•STRIP - STARBOARD AILERON SEAL STA 50 & 62 RETAINER LH		1
	AN3-4A	•BOLT -		3
	AN960D10	•WASHER -		1
	AN365-1032	•NUT -		1
-59	165-16026-1	•STRIP - PORT AILERON SEAL STA 50 & 62 RTNR		1
	165-16026-2	•STRIP - STBD AILERON SEAL STA 50 & 62 RTNR		1
	5B17C4A	•BOLT - CORROSION-RESISTANT (10-32) (NAA)		3
	AN960D10	•WASHER -		1
	AN363C1032	•NUT -		1
-60	165-16021-7	•STRIP - AILERON SEAL REAR RETAINER		1
	5B17C4A	•BOLT - CORROSION-RESISTANT (10-32) (NAA)		3
-61	165-16048-1	•STRIP - PORT AIL. SEAL STA 85 END RTNR LH		1
	165-16048-2	•STRIP - STARBOARD AILERON SEAL STA 85 END RETAINER RH		1
	165-16048-2	•STRIP - PORT AILERON SEAL STA 85 END RETAINER RH		1
	165-16048-1	•STRIP - STARBOARD AILERON SEAL STA 85 END RETAINER LH		1
	5B17C4A	•BOLT - CORROSION-RESISTANT (10-32) (NAA)		4
	AN363C1032	•NUT -		2
-62	165-16021-9	•STRIP - AILERON SEAL REAR RETAINER		1

FIGURE AND INDEX NUMBER	GROUP WING MAJOR ASSEMBLY AILERON COUNTERBALANCE & SEAL PART NUMBER	1234567 NOMENCLATURE	CODE	UNITS PER ASSY
25 -	5B17C4A	•BOLT - CORROSION-RESISTANT (10-32) (NAA)		3
-63	165-16027-1	•STRIP - PORT AILERON STA 108 SEAL RETAINER		1
	165-16027-2	•STRIP - STBD AILERON STA 108 SEAL RETAINER		1
	5B17C4A	•BOLT - CORROSION-RESISTANT (10-32) (NAA)		3
-64	165-16051	•GUSSET - AILERON STA 6 SEAL RETAINER		1
-65	AN3-7A	•BOLT - MPI		4
	AN960D10	•WASHER -		8
	AN365-1032	•NUT -		4
-66	165-16054	•GUSSET - AILERON STA 114 CANTED SEAL RTNR		1
-67	AN3-7A	•BOLT - MPI		2
	AN960D10	•WASHER -		3
	AN365-1032	•NUT -		2
-68	165-16052	•GUSSET - AILERON SEAL STA 50 RETAINER		1
-69	AN3-6A	•BOLT -		2
	AN960D10	•WASHER -		4
	AN365-1032	•NUT -		2
-70	165-16053	•GUSSET - AILERON SEAL STA 62 RETAINER		1
-71	5B17C6A	•BOLT - CORROSION-RESISTANT (10-32) (NAA)		2
	AN960D10	•WASHER -		4
	AN363C1032	•NUT -		2
-72	165-16007-1	FITTING - PORT AILERON INBOARD FWD HINGE (SEE FIG. 9)		REF
-73	165-16020-1	FITTING - PORT AILERON OUTBOARD FWD HINGE (SEE FIG. 9)		REF
		-000-		

SECTION 2

EMPENNAGE

TABLE OF CONTENTS

FIGURE	TITLE	PAGE
26	COMPLETE EMPENNAGE	164
26A	ELEVATOR & RUDDER MECHANISM	168
27	HORIZONTAL STABILIZER	172
28	EMPENNAGE ELEVATOR	178
28A	EMPENNAGE ELEVATOR	1808
29	VERTICAL STABILIZER	182
30	COMPLETE RUDDER	186
31	EMPENNAGE FILLET	192

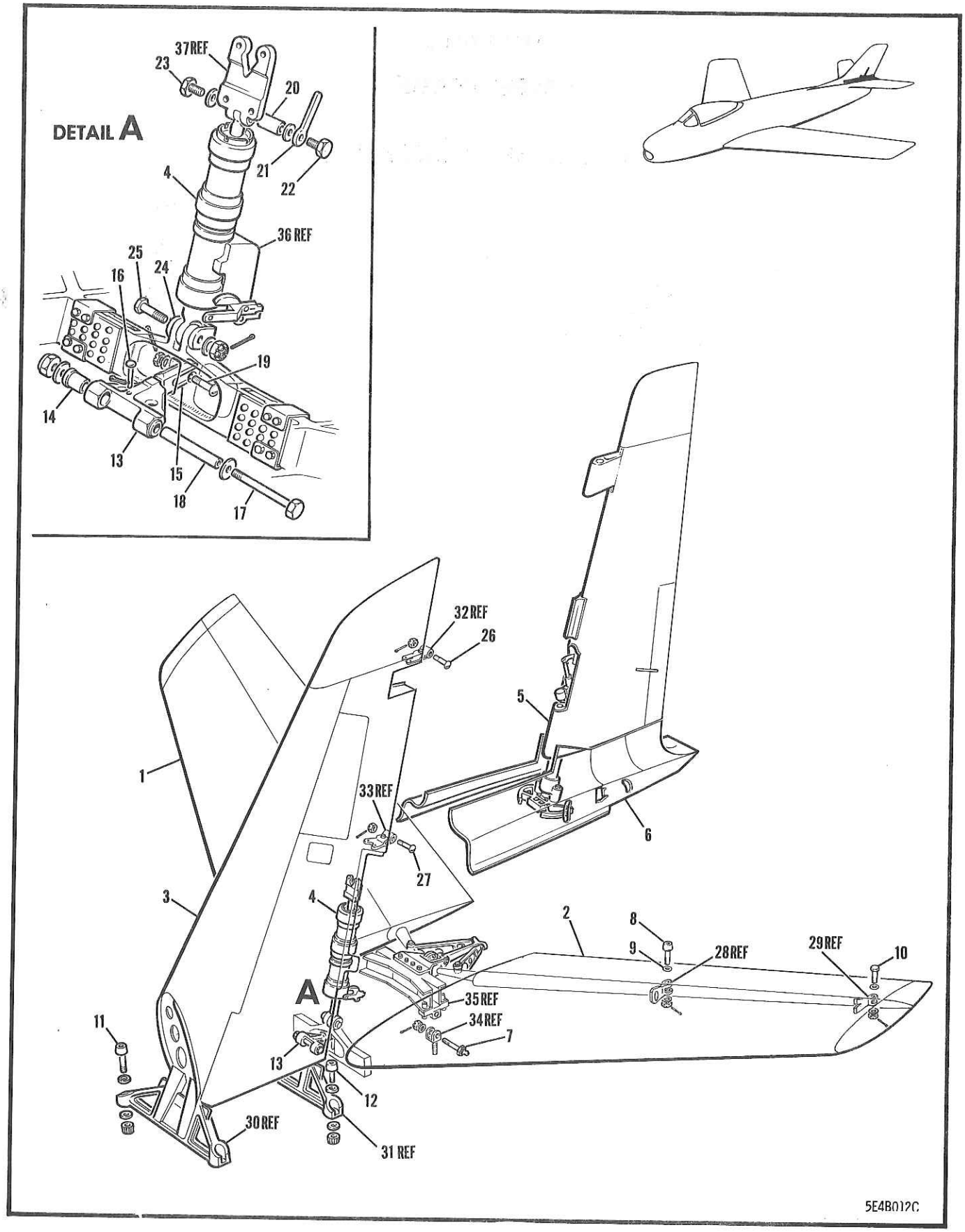

FIGURE 26 COMPLETE EMPENNAGE

FIGURE AND INDEX NUMBER	GROUP / MAJOR ASSEMBLY / PART NUMBER	EMPENNAGE / COMPLETE EMPENNAGE / 1234567 NOMENCLATURE	CODE	UNITS PER ASSY
26 -	170-20001	EMPENNAGE INSTL - COMPLETE (SEE FIG. 1)		NP
- 1	170-21001	•STABILIZER ASSY - HORIZONTAL COMPLETE (SEE FIG. 27)		REF
- 2	170-22001-51	•ELEVATOR ASSY - COMPLETE (SEE FIG. 28)		REF
	13B-21022	•ELEVATOR ASSY - COMPLETE (SEE FIG. 28A)		REF
- 3	170-23001-801	•STABILIZER ASSY - VERTICAL (SEE FIG. 29)		REF
- 4	176-58706-151	•CYLINDER ASSY - HYDRAULIC STAB. ACTUATOR (SEE SECTION 11)		REF
- 5	151-24001	•RUDDER ASSY - COMPLETE (SEE FIG. 30)		REF
- 6	170-25001	•FILLET INSTL - EMPENNAGE (SEE FIG. 31)		REF
- 7	170-21430-801	•BOLT ASSY - HORIZONTAL STABILIZER TO FUS ATTACHING MPI(AS PER EO 05-5E-6A/18)		2
	170-21430-803	••BOLT - HORIZONTAL STAB. TO FUS ATTACHING		1
	AN944-101	••FITTING -		1
	13A-20031	•WASHER - HORIZONTAL STAB. TO FUS ATT BOLT (AS PER EO 05-5E-6A/18)		2
	AN960-716L	•WASHER - (AS PER EO 05-5E-6A/18)		2
	13B-30006	•RETAINER ASSY - HOR/STAB TO FUSELAGE ATT (AS PER EO 05-5E-6A/268)		2
	AN310-7	•NUT - MPI		2
	AN380-3-3	•COTTER-PIN -		2
- 8	NAS144-41A	•BOLT - (ELEVATOR CENTRE HINGE ATTACHING)		2
- 9	2W10-4	•WASHER - COUNTERSUNK (NAA)		2
	AN960D416	•WASHER -		4
	AN310-4	•NUT - MPI		2
	AN380-2-3	•COTTER-PIN -		2
-10	NAS464-4-19	•SHEAR-BOLT - (ELEVATOR OUTER HINGE ATT)		2
	AN960D416	•WASHER -		4
	AN310-4	•NUT - MPI		2
	AN380-2-3	•COTTER-PIN -		2
-11	NAS150-31	•BOLT - MPI (VERT/STAB FORWARD ATTACHING)		2
	NAS143-10C	•WASHER -		2
	NAS143-10	•WASHER -		4
	EB-108	•NUT - DOUBLE HEX HIGH TENSILE (ESN)		2
-12	NAS149-29	•BOLT - MPI (VERT/STAB REAR ATTACHING)		2
	NAS143-9C	•WASHER -		2
	NAS143-9	•WASHER -		4
	EB-098	•NUT - DOUBLE HEX HIGH TENSILE (ESN)		2
	170-21418-950	•FITTING ASSY - HORIZONTAL STABILIZER FWD BEAM SNUBBER(AS PER EO 05-5E-6A/225)		1
	170-21418-802	•SPARE PART ASSY FOR 170-21418-950		
	170-21415-800	••FITTING ASSY - HORIZONTAL STAB. FWD BEAM SNUBBER FORK(AS PER EO 05-5E-6A/225)		1
-13	170-21415-950	•••FITTING - HORIZONTAL STAB. FORWARD BEAM SNUBBER FORK(AS PER EO 05-5E-6A/225)		1
-14	4B16RF7-12	•••BEARING - SINTERED OIL IMPREGNATED (NAA)		2
-15	170-21416	••FITTING - HORIZONTAL STABILIZER FORWARD BEAM SNUBBER SLIDE		1
-16	AN393-29	••PIN -		1
	AN381-2-8	••COTTER-PIN -		1
	170-20001-805	•DECALCOMANIA - SNUBBER ARRANGEMENT (AS PER EO 05-5E-6A/225)		1
-17	AN174-44A	•BOLT - MPI (SNUBBER TO FITTING ATTACHING)		1
-18	170-21419-800	•BUSHING - HORIZONTAL STAB. FWD BEAM SNBR FORK MPI (AS PER EO 05-5E-6A/225)	260-	1
	170-20001-807	•WASHER - (BETWEEN SNUBBER & BRACKET) (AS PER EO 05-5E-6A/225)		2
	AN960D416	•WASHER -		1
	AN365-428	•NUT -		1
-19	AN25-25	•BOLT - MPI (SNUBBER TO STABILIZER FORWARD CENTRE BEAM ATTACHING)		1

FIGURE AND INDEX NUMBER	GROUP / MAJOR ASSEMBLY / PART NUMBER	EMPENNAGE / COMPLETE EMPENNAGE / 1234567 NOMENCLATURE	CODE	UNITS PER ASSY
26 -	AN960D516	•WASHER -		1
	AN320-5	•NUT - MPI		1
	AN380-2-3	•COTTER-PIN -		1
-20	170-23420	•PIN - HOR/STAB ACTUATOR UPPER ATTACHING		1
-21	176-52261	•STRAP - HOR/STAB CTL ARTL FEEL AT SURFACE		1
	2W2B21-28-125	•WASHER - PLAIN (NAA)		1
-22	AN5H5A	•BOLT - MPI (ACTUATOR TO UP• FITTING ATT)		1
	2W2B21-28-125	•WASHER - PLAIN (NAA)		1
-23	AN5H4A	•BOLT - MPI (ACTUATOR TO UP• FITTING ATT)		1
-24	170-58786	•GUIDE - HORIZONTAL STABILIZER CYLINDER MPI		1
-25	AN180-25	•BOLT - (GUIDE TO ACTUATOR ATTACHING)		1
	2W1C41-38-16	•WASHER - PLAIN (NAA)		8
	AN310-10	•NUT - MPI		1
	AN380-4-4	•COTTER-PIN -		1
-26	AN24-30	•BOLT - MPI (RUDDER UPPER HINGE ATTACHING)		1
-27	AN24-32	•BOLT - MPI (RUDDER CENTRE HINGE ATTACHING)		1
	AN320-4	•NUT - MPI		2
	AN380-2-2	•COTTER-PIN -		2
-28	170-21408	FITTING - HOR/STAB TO ELEVATOR INTERHINGE ATT (SEE FIG• 27)		REF
-29	165-21410	FITTING - HOR/STAB TO ELEVATOR OUTBD HINGE ATT (SEE FIG• 27)		REF
-30	151-23402-3	FITTING - VERTICAL STAB• FWD BEAM TO FUS ATT (SEE FIG• 29)		REF
-31	151-23404-3	FITTING - VERTICAL STAB• REAR BEAM TO FUS ATT (SEE FIG• 29)		REF
-32	11B1-5	LINK ASSY - BEARING (NAA) (SEE FIG• 29)		REF
-33	11B1-3	LINK ASSY - BEARING (NAA) (SEE FIG• 29)		REF
-34	13-21015-7	BOLT - HOR/STAB HINGE FUSELAGE STA 398 MPI (SEE SECTION 7)		REF
-35	170-21404-3	FITTING ASSY - HOR/STAB REAR BEAM TO SUP• ATT STBD MPI (SEE FIG• 27)		REF
-36	172-58707-3	VALVE ASSY - HYDRAULIC STAB• SURFACE CTL (SEE SECTION 11)		REF
-37	170-23416-7	FITTING - HOR/STAB ACTUATOR UPPER ATT (SEE FIG• 29)		REF
		(CONTINUED SEE FIG• 26A)		

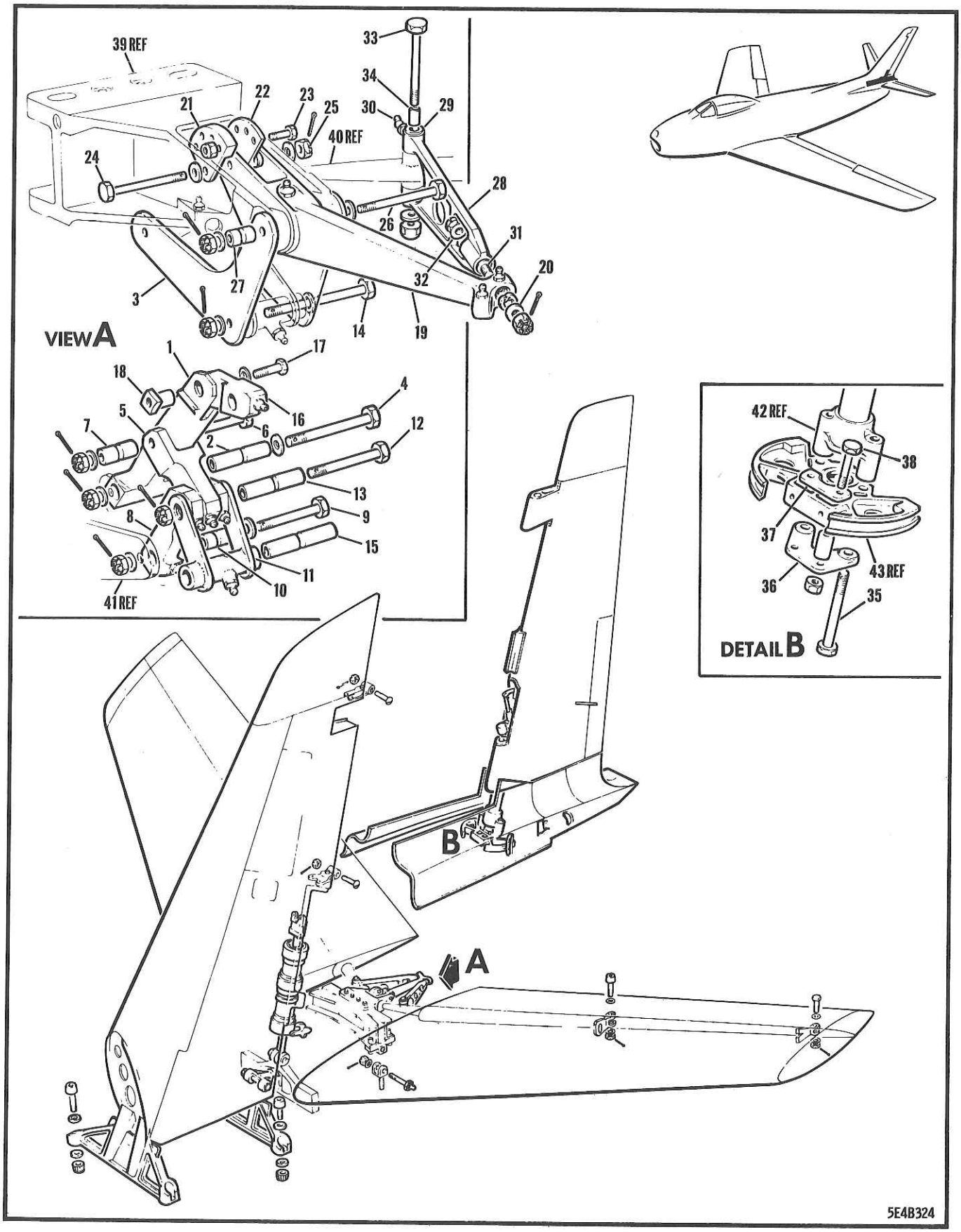

FIGURE 26A ELEVATOR & RUDDER MECHANISM

Stanyar

ROYAL CANADIAN AIR FORCE

EO 05-5E-4
16 Jan 59

ADVANCE REVISION

Serial #2 dated 15 Jun 59
(Sheet 1 of 7)

The sheets of this Advance Revision are to be inserted in the EO as follows:

Sheet 1 facing page 169
Sheet 2 facing page 179
Sheet 3 facing page 837
Sheet 4 facing page 838
Sheet 5 facing page 839
Sheet 6 facing page 840
Sheet 7 facing page 938

Top of page after Part 170-20001 insert the following:

K13-120 Kit - Elevator Linkage Assembly.

ISSUED ON AUTHORITY OF THE CHIEF OF THE AIR STAFF

FIGURE AND INDEX NUMBER	GROUP EMPENNAGE MAJOR ASSEMBLY ELEVATOR & RUDDER MECHANISM PART NUMBER	1234567 NOMENCLATURE	CODE	UNITS PER ASSY
26A-	170-20001	EMPENNAGE INSTL - COMPLETE (SEE FIG. 26)		REF
- 1	170-21447	•BELL-CRANK ASSY - HOR/STAB CENTRE SECTION		1
	170-21447-3	••BELL-CRANK - STABILIZER CTR SECTION MPI		1
	AN944-301	••FITTING -		1
	AN535-2-2	••SCREW -		1
- 2	170-21446-17	•BUSHING - ELEVATOR CENTRE SECTION CTL MPI		1
- 3	170-21440-800	•PLATE - ELEVATOR CONTROL CENTRE HINGE ATT	001-300	2
	170-21440	•PLATE - ELEVATOR CONTROL CENTRE HINGE ATT	301-	2
- 4	AN175-33	•BOLT - MPI (HINGE TO BELCRK & PLATE ATT)	001-020	1
	170-20001-951	•BOLT - EMP MPI (MAKE FROM AN175-33A)	021-	1
	AN960C516	•WASHER -	001-020	2
	AN960C516L	•WASHER -	021-	AR
	AN310-5	•NUT - MPI		1
	AN380-2-3	•COTTER-PIN -		1
- 5	170-21448	•LINK ASSY - ELEVATOR FORWARD DRIVING		1
	170-21448-3	••LINK - ELEVATOR FORWARD DRIVING MPI		1
	AN944-101	••FITTING -		1
- 6	AN174-13	•BOLT - MPI		1
- 7	170-21446-19	•BUSHING - ELEVATOR CENTRE SECTION CTL MPI		1
		OR		
	170-21446-801	•BUSHING - ELEVATOR CENTRE SECTION CTL MPI		
	AN310-4	•NUT - MPI		1
	AN380-2-3	•COTTER-PIN -		1
- 8	170-21441	•LINK ASSY - HORIZONTAL STABILIZER CENTRE HINGE SECTION		1
	170-21441-3	••LINK - HORIZONTAL STAB. CTR HINGE SECTION		1
	AN944-101	••FITTING -		2
	AN944-201	••FITTING -		1
- 9	AN175-17	•BOLT - MPI (LINK TO SUPPORT ATTACHING)		1
-10	170-21446-13	•BUSHING - ELEVATOR CENTRE SECTION CTL MPI		1
	AN960C516	•WASHER -		2
	AN310-5	•NUT - MPI		1
	AN380-2-3	•COTTER-PIN -		1
-11	170-21443	•LINK ASSY - ELEVATOR REAR DRIVING MPI		1
	AN944-101	••FITTING -		1
-12	NAS464-5-26	•SHEAR-BOLT -		1
-13	170-21446-3	•BUSHING - ELEVATOR CENTRE SECTION CTL MPI		1
	AN320-5	•NUT - MPI		1
	AN380-2-3	•COTTER-PIN -		1
-14	AN175-33	•BOLT - MPI (REAR DRIVING LINK & PLATE ATT)	001-020	1
	170-20001-951	•BOLT - EMP MPI (MAKE FROM AN175-33A)	021-	1
-15	170-21446-11	•BUSHING - ELEVATOR CENTRE SECTION CTL MPI		1
	AN960C516	•WASHER -	001-020	2
	AN960C516L	•WASHER -	021-	AR
	AN310-5	•NUT - MPI		1
	AN380-2-3	•COTTER-PIN -		1
-16	170-21445-800	•LINK ASSY - ELEVATOR CONTROL ARM (AS PER EO 05-5E-6A/22)		1
	170-21445-802	••LINK - ELEVATOR CONTROL ARM (AS PER EO 05-5E-6A/22)		1
	AN944-101	••FITTING -		1
-17	AN174H5A	•BOLT - MPI (ELEVATOR CTL ARM LINK TO BELL-CRANK ATTACHING)		1
-18	170-21449	•BUSHING - ELEVATOR GEARING MPI	001-712	1
	170-21449-950	•BUSHING - ELEVATOR GEARING MPI	713-	1
	170-21434-800	•ARM ASSY - ELEVATOR CONTROL (AS PER EO 05-5E-6A/22)		1
-19	170-21434-950	••ARM - ELEVATOR CTL(AS PER EO 05-5E-6A/22)		1
	4B19B8-013	••BUSHING - PRESS-FIT PLAIN (NAA) (AS PER EO 05-5E-6A/22)		2

FIGURE AND INDEX NUMBER	GROUP EMPENNAGE MAJOR ASSEMBLY ELEVATOR & RUDDER MECHANISM PART NUMBER	1234567 NOMENCLATURE	CODE	UNITS PER ASSY
26A-	AN944-101	••FITTING -		3
	LSS4	••BEARING - UNIBAL SPHERICAL (HEC)		2
-20	NAS50-68	••RING -		2
-21	170-21450	•PLATE - HORIZONTAL STABILIZER TO ELEVATOR ADJUSTMENT LOCKING	001-100	1
	170-21450-51	•PLATE - HORIZONTAL STABILIZER TO ELEVATOR ADJUSTMENT LOCKING	101-	1
-22	170-21451	•BUSHING - ELEVATOR CONTROL ADJUSTMENT LKG		1
-23	AN515C8R9	•SCREW -		1
		OR		
	AN515-8R9	•SCREW -		
	AN365-832	•NUT -		1
-24	NAS464-4-19	•SHEAR-BOLT - MPI (ELEVR ARM TO LINK ATT)		1
	AN960D516	•WASHER -	001-020	2
	AN960C516L	•WASHER -	021-	AR
-25	AN310-4	•NUT -		1
	AN380-2-3	•COTTER-PIN -		1
-26	AN175-33	•BOLT - MPI (ARM & PLATE TO HINGE ATT)	001-020	1
	170-20001-951	•BOLT - EMP MPI (MAKE FROM AN175-33A)	021-	1
-27	170-21446-21	•BUSHING - ELEVATOR CENTRE SECTION CTL MPI		1
	AN960C516	•WASHER -	001-020	2
	AN960C516L	•WASHER -	021-	AR
	AN310-5	•NUT - MPI		1
	AN380-2-3	•COTTER-PIN -		1
	170-21433-5	•HORN ASSY - ELEVATOR CONTROL MPI		2
-28	170-21433-3	••HORN - ELEVATOR CONTROL		2
-29	4B20B7-006	••BUSHING - PRESS-FIT FLANGED (NAA)	001-712	4
	4B20S7-006	••BUSHING - PRESS-FIT FLANGED (NAA)	713-	4
-30	AN944-201	••FITTING -		2
-31	170-21435	•SCREW - ELEVATOR CONTROL ADJUSTMENT MPI		2
-32	AN320-5	•NUT -		2
	AN320-4	•NUT -		2
	AN380-2-3	•COTTER-PIN -		2
-33	AN175-31	•BOLT - MPI (HORN TO ELEVR TORQUE TUBE ATT)		2
	2W2S20-22-062	•WASHER - THRUST (NAA) (AS PER EO 05-5E-6A/22)		2
-34	4B21S5-019	•BUSHING - SPACER (NAA)		4
	2W2S20-22-062	•WASHER - THRUST (NAA) (AS PER EO 05-5E-6A/22)		2
	AN310-5	•NUT - MPI		2
	AN380-2-3	•COTTER-PIN -		2
	AN960C516L	•WASHER - (ELEVATOR TORQUE TUBE TO CENTRE HINGE ATTACHING)		12
	AN365-524	•NUT - (ELEVR TORQUE TUBE TO CTR HINGE ATT)		2
-35	NAS335-32	•BOLT - (RUDDER TORQUE TUBE TO SECTOR ATT)		2
-36	170-52407	•RETAINER - RUDDER CTL SECTOR BEARING LOWER		1
	AN960D516	•WASHER -		2
	AN310-5	•NUT - MPI		2
	AN380-2-2	•COTTER-PIN -		2
-37	170-52408	•RETAINER - RUDDER CTL SECTOR BEARING UPPER		1
-38	AN4-15A	•BOLT - MPI (RETAINER TO SECTOR ATTACHING)		2
	170-52406	•SPACER - RUDDER CTL SECTOR BEARING RTNR		2
	AN365-428	•NUT -		2
-39	170-21422-51	HINGE ASSY - ELEVATOR CONTROL CENTRE (SEE FIG. 27)		REF
-40	170-22434	TORQUE TUBE - ELEVATOR MPI (SEE FIG. 28)		REF
-41	170-52010	SUPPORT ASSY - SURFACE CTL EMPENNAGE (SEE SECTION 7)		REF
-42	151-24402	TORQUE TUBE ASSY - RUDDER (SEE FIG. 30)		REF
-43	170-52403	SECTOR ASSY - RUDDER CONTROL REAR (SEE SECTION 7)		REF

-000-

FIGURE AND INDEX NUMBER	GROUP	EMPENNAGE	CODE	UNITS PER ASSY
	MAJOR ASSEMBLY	ELEVATOR & RUDDER MECHANISM		
	PART NUMBER	1234567 NOMENCLATURE		
26A-	K13-120	KIT ASSY - ELEVATOR LINKAGE (SEE FIG. 1)		1
	170-20001-951	•BOLT - EMPENNAGE MPI (MAKE FROM AN175-33A)		3
	170-21433-5	•HORN ASSY - ELEVATOR CONTROL MPI		2
	170-21434-800	•ARM ASSY - ELEVATOR CONTROL		1
	170-21435	•SCREW - ELEVATOR CONTROL ADJUSTMENT MPI		2
	170-21440	•PLATE - ELEVATOR CONTROL CENTRE HINGE ATT		2
	170-21441	•LINK ASSY - HOR/STAB CENTRE HINGE SECTION		1
	170-21443	•LINK ASSY - ELEVATOR REAR DRIVING MPI		1
	170-21445-800	•LINK ASSY - ELEVATOR CONTROL ARM		1
	170-21446-3	•BUSHING - ELEVATOR CTR/SECT CONTROL MPI		1
	170-21446-11	•BUSHING - ELEVATOR CTR/SECT CONTROL MPI		1
	170-21446-13	•BUSHING - ELEVATOR CTR/SECT CONTROL MPI		1
	170-21446-17	•BUSHING - ELEVATOR CTR/SECT CONTROL MPI		1
	170-21446-21	•BUSHING - ELEVATOR CTR/SECT CONTROL MPI		1
	170-21446-801	•BUSHING - ELEVATOR CTR/SECT CONTROL MPI		1
	170-21447	•BELL-CRANK ASSY - HOR/STAB CENTRE SECTION		1
	170-21448	•LINK ASSY - ELEVATOR FORWARD DRIVING		1
	170-21449-950	•BUSHING - ELEVATOR GEARING MPI		1
	170-21450-51	•PLATE - HOR/STAB TO ELEVATOR ADJ LOCKING		1
	170-21451	•BUSHING - ELEVATOR CTL ADJUSTMENT LOCKING		1
	AN174H5A	•BOLT - MPI		1
	AN174-13	•BOLT - MPI		1
	AN175-17	•BOLT - MPI		1
	AN175-31	•BOLT - MPI		2
	AN310-4	•NUT - MPI		2
	AN310-5	•NUT - MPI		6
	AN320-4	•NUT - MPI		2
	AN320-5	•NUT - MPI		3
	AN365-832	•NUT -		1
	AN380-2-3	•COTTER-PIN -		8
	AN515C8R9	•SCREW -		1
	AN960D516	•WASHER -		2
	AN960C516	•WASHER -		8
	AN960C516L	•WASHER -		20
	NAS464-4-19	•SHEAR-BOLT - MPI		1
	NAS464-5-26	•SHEAR-BOLT - MPI		1
	2W2S20-22-062	•WASHER - THRUST (NAA)		4
	4B21S5-019	•BUSHING - SPACER (NAA)		4
		-000-		

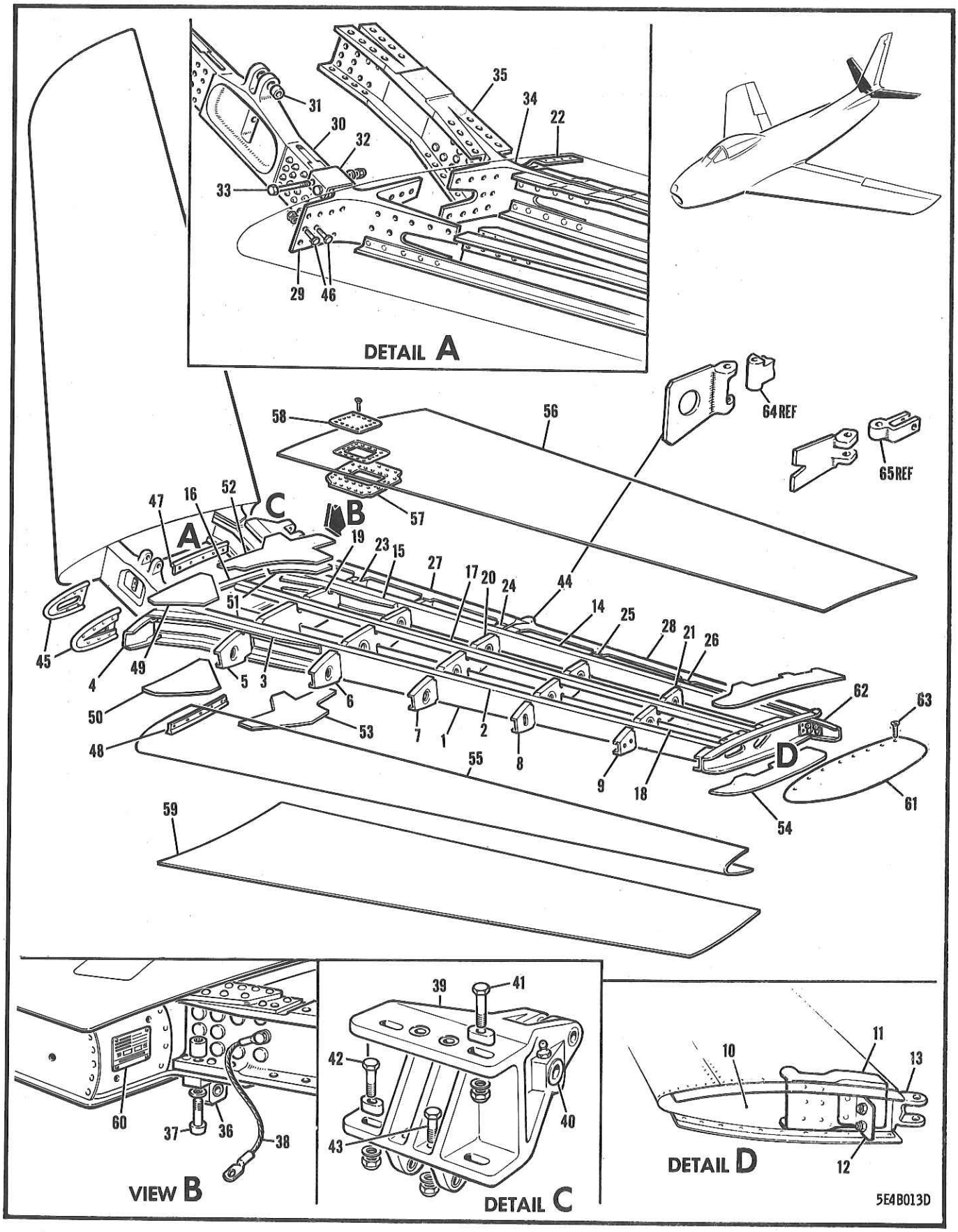

FIGURE 27 HORIZONTAL STABILIZER

FIGURE AND INDEX NUMBER	GROUP: EMPENNAGE MAJOR ASSEMBLY: HORIZONTAL STABILIZER PART NUMBER	1234567 NOMENCLATURE	CODE	UNITS PER ASSY
27 -	170-21001	STABILIZER ASSY - HORIZONTAL COMPLETE (SEE FIG. 26)		1
	170-21001-800	SPARE PART ASSY FOR 170-21001		
- 1	151-21301-1	.BEAM ASSY - HORIZONTAL STABILIZER FWD PORT		1
	151-21301-2	.BEAM ASSY - HORIZONTAL STABILIZER FWD STBD		1
- 2	151-21117-1	.STRIP - HOR/STAB FORWARD BEAM UP. PORT CAP		1
	151-21117-2	.STRIP - HOR/STAB FORWARD BEAM UP. STBD CAP		1
	151-21116-1	.STRIP - HOR/STAB FORWARD BEAM LWR PORT CAP		1
	151-21116-2	.STRIP - HOR/STAB FORWARD BEAM LWR STBD CAP		1
- 3	151-21119-1	.ANGLE - HOR/STAB FORWARD BEAM UPPER PORT		1
	151-21119-2	.ANGLE - HOR/STAB FORWARD BEAM UPPER STBD		1
	151-21118-1	.ANGLE - HOR/STAB FORWARD BEAM LOWER PORT		1
	151-21118-2	.ANGLE - HOR/STAB FORWARD BEAM LOWER STBD		1
- 4	151-21008-1	.RIB ASSY - HOR/STAB CANTED NOSE PORT		1
	151-21008-2	.RIB ASSY - HOR/STAB CANTED NOSE STARBOARD		1
- 5	151-21013	.RIB - HORIZONTAL STABILIZER STA 12 NOSE	001-746	2
	151-21013-3	.RIB - HORIZONTAL STABILIZER STA 12 NOSE	747-	1
	AN520-10-12	.SCREW - MPI (RIB TO BEAM ATTACHING)		2
- 6	151-21025	.RIB - HORIZONTAL STABILIZER STA 24 NOSE		2
	AN520-10-9	.SCREW - (RIB TO BEAM ATTACHING)		2
- 7	151-21038	.RIB - HORIZONTAL STABILIZER STA 36 NOSE		2
	AN520-10-7	.SCREW - (RIB TO BEAM ATTACHING)		2
	AN526-1032-6	.SCREW - (TO BLOCK ELEVR RIGGING FIXTURE ATTACHING HOLE)		4
	AN960-10L	.WASHER -		4
- 8	151-21047	.RIB - HORIZONTAL STABILIZER STA 47 NOSE		2
	AN520-10-7	.SCREW - (RIB TO BEAM ATTACHING)		2
- 9	151-21058	.RIB - HORIZONTAL STABILIZER STA 57 NOSE		2
	AN520-10-7	.SCREW - (RIB TO BEAM ATTACHING)		2
	13B-21020-5	.DOUBLER - HORIZONTAL STABILIZER (AS PER EO 05-5E-6A/188)		2
	13B-21020-7	.RIB ASSY - HORIZONTAL STABILIZER (STA 72) (AS PER EO 05-5E-6A/188)		2
-10	170-21072-951	..RIB - HORIZONTAL STABILIZER STA 72		1
-11	170-21071-800	..RIB - HORIZONTAL STABILIZER TE STA 72		1
-12	151-21133	..CLIP - HORIZONTAL STABILIZER TIP ATT		1
-13	165-21410	..FITTING - HORIZONTAL STABILIZER TO ELEVATOR INTERHINGE ATTACHING		1
	170-21302-1	.BEAM ASSY - HORIZONTAL STAB. REAR PORT		1
	170-21302-2	.BEAM ASSY - HORIZONTAL STAB. REAR STBD		1
-14	170-21120-1	..STRIP - HOR/STAB REAR BEAM UPPER PORT CAP		1
	170-21120-2	..STRIP - HOR/STAB REAR BEAM UPPER STBD CAP		1
	170-21121-1	..STRIP - HOR/STAB REAR BEAM LOWER PORT CAP		1
	170-21121-2	..STRIP - HOR/STAB REAR BEAM LOWER STBD CAP		1
-15	151-21122-1	..ANGLE - HOR/STAB REAR BEAM UPPER PORT		1
	151-21122-2	..ANGLE - HOR/STAB REAR BEAM UPPER STBD		1
	151-21123-1	..ANGLE - HOR/STAB REAR BEAM LOWER PORT		1
	151-21123-2	..ANGLE - HOR/STAB REAR BEAM LOWER STBD		1
-16	151-21007-1	.RIB - HORIZONTAL STAB. CANTED INTER PORT		1
	151-21007-2	.RIB - HORIZONTAL STAB. CANTED INTER STBD		1
	AN509-416-12	.SCREW - MPI		2
	AN960-416	.WASHER -		2
	AN365-428	.NUT -		2
-17	170-21001-13	.STRINGER - HOR/STAB UPPER STA 1-72 PORT		1
	170-21001-14	.STRINGER - HOR/STAB UPPER STA 1-72 STBD		1
-18	170-21001-15	.STRINGER - HOR/STAB LOWER STA 1-72 PORT		1
	170-21001-16	.STRINGER - HOR/STAB LOWER STA 1-72 STBD		1
-19	151-21012-1	.INTERRIB - HORIZONTAL STAB. STA 12 PORT		1
	151-21012-2	.INTERRIB - HORIZONTAL STAB. STA 12 STBD		1
	151-21024	.INTERRIB - HORIZONTAL STABILIZER STA 14		2
-20	151-21036	.INTERRIB ASSY - HORIZONTAL STAB. STA 36		2
	151-21046	.INTERRIB - HORIZONTAL STABILIZER STA 47		2
-21	170-21057	.INTERRIB - HORIZONTAL STABILIZER STA 57		2
-22	170-21009-1	.RIB - HOR/STAB OUTBOARD TE CANTED PORT		1

FIGURE AND INDEX NUMBER	GROUP / MAJOR ASSEMBLY / PART NUMBER	EMPENNAGE / HORIZONTAL STABILIZER / 1234567 NOMENCLATURE	CODE	UNITS PER ASSY
27 -	170-21009-2	•RIB - HOR/STAB OUTBOARD TE CANTED STBD		1
-23	170-21014	•RIB - HORIZONTAL STABILIZER STA 12 TE		2
	170-21026	•RIB - HORIZONTAL STABILIZER STA 24 TE		2
-24	170-21039	•RIB - HORIZONTAL STABILIZER STA 36 TE INBD		2
	170-21037	•RIB - HORIZONTAL STAB• STA 36 TE OUTBOARD		2
-25	170-21048	•RIB - HORIZONTAL STABILIZER STA 46 TE		2
-26	170-21049	•RIB - HORIZONTAL STABILIZER STA 57 TE		2
-27	170-21135-1	•CHANNEL - HOR/STAB TE SUPPORT INBD PORT		1
	170-21135-2	•CHANNEL - HOR/STAB TE SUPPORT INBD STBD		1
-28	170-21136	•CHANNEL - HORIZONTAL STAB• TE SUP• OUTBD		2
-29	151-21414-1	•FITTING - HORIZONTAL STABILIZER FWD BEAM TO CANTED RIB & CTR SECTION ATT PORT		1
	151-21414-2	•FITTING - HORIZONTAL STABILIZER FWD BEAM TO CANTED RIB & CTR SECTION ATT STBD		1
-30	170-21303-5	•BEAM ASSY - HORIZONTAL STAB• FORWARD CTR		1
-31	4B19S10-014	••BUSHING - PRESS-FIT PLAIN (NAA)		2
-32	170-21436-3	•CLIP - STAB• FORWARD BEAM COVER-PLATE PORT		2
	170-21436-4	•CLIP - STAB• FORWARD BEAM COVER-PLATE STBD		2
-33	AN4-17A	•BOLT - MPI (ATTACHING CLIP TO BEAM TO FTG)		8
	AN960C416	•WASHER -		16
	AN365-428	•NUT -		8
-34	151-21412-1	•FITTING - HORIZONTAL STABILIZER REAR BEAM TO CANTED RIB CTR SECTION ATT PORT		1
	151-21412-2	•FITTING - HORIZONTAL STABILIZER REAR BEAM TO CANTED RIB CTR SECTION ATT STBD		1
-35	170-21304	•BEAM - HORIZONTAL STAB• CENTRE SECT• REAR		1
	170-21431	•SPACER - HORIZONTAL STAB• CENTRE REAR BEAM (UNDER LOWER RIVET)		16
-36	170-21404-30	•FITTING ASSY - HORIZONTAL STAB• REAR BEAM TO SUPPORT ATTACHING STBD MPI		1
	170-21404-5	•FITTING ASSY - HORIZONTAL STAB• REAR BEAM TO SUPPORT ATTACHING PORT MPI		1
	170-21432-3	••BUSHING - HOR/STAB TO FUS ATT BOLT PORT		1
	170-21432-5	••BUSHING - HOR/STAB TO FUS ATT BOLT STBD		1
-37	NAS146-27	•BOLT -		4
	NAS143-6C	•WASHER -		4
	128-064	•NUT - (ESN) (DOUBLE HEX HIGH TENSILE)		4
-38	6043-3-8-6	•JUMPER - (JNI) (BONDING)	001-410	2
	6043-3-7-6	•JUMPER - (JNI) (BONDING)	411-	2
	AN3-12A	•BOLT -		2
	AN365-1032	•NUT -		2
	AN960D616	•WASHER -		4
-39	170-21422-51	•HINGE ASSY - ELEVATOR CONTROL CENTRE		1
	AN944-101	••FITTING -		2
	LSS5	••BEARING - UNIBAL SPHERICAL (HEC)		2
-40	5008-75	••RING - INTERNAL RETAINING (WKI)		2
-41	AN174-14A	•BOLT - (HINGE TO BEAM ATTACHING)		4
	170-21429-5	•SPACER - ELEVATOR CONTROL CENTRE HINGE		2
-42	AN174-13A	•BOLT - (HINGE TO BEAM ATTACHING)		2
	170-21429-3	•SPACER - ELEVATOR CONTROL CENTRE HINGE		2
-43	AN174-11A	•BOLT - (HINGE TO BEAM ATTACHING)		2
	AN960-416	•WASHER -		8
	AN365-428	•NUT -		8
-44	170-21408	•FITTING - HOR/STAB TO ELEVR INTER HNG ATT		2
-45	151-21115	•SEAL ASSY - HOR/STAB CANTED NOSE RIB		2
	AN509-10-11	•SCREW - (SEAL ATTACHING)		6
	151-21111-13	•SHIM - HIGH SHEAR TAPERED		4
	AN509-10-13	•SCREW - MPI (SEAL ATTACHING)		4
-46	AN3-6A	•BOLT - (FITTING TO RIB ATTACHING)		2
	AN3-7A	•BOLT - (FITTING TO RIB ATTACHING)		2
	AN960-10	•WASHER -		4
	AN365-1032	•NUT -		4
-47	151-21114-5	•SEAL ASSY - HOR/STAB INTER CANTED RIB PORT		1
	151-21114-6	•SEAL ASSY - HOR/STAB INTER CANTED RIB STBD		1

FIGURE AND INDEX NUMBER	GROUP / MAJOR ASSEMBLY / PART NUMBER	EMPENNAGE / HORIZONTAL STABILIZER / 1234567 NOMENCLATURE	CODE	UNITS PER ASSY
27 -	151-21111-7	•SHIM - HIGH SHEAR TAPERED		4
	AN509-416-16	•SCREW - MPI (ATTACHING SEAL & FTG TO RIB)		2
	AN509-416-20	•SCREW - MPI (ATTACHING SEAL & FTG TO RIB)		2
	AN365-428	•NUT -		4
	151-21108-21	•SHIM - HORIZONTAL STABILIZER RIB		4
	AN509-516-18	•SCREW - MPI (ATTACHING SEAL & FTG TO RIB)		4
	AN364-524	•NUT -		4
-48	151-21114-3	•SEAL ASSY - HOR/STAB INTER CANTED RIB PORT		1
	151-21114-4	•SEAL ASSY - HOR/STAB INTER CANTED RIB STBD		1
	151-21111-7	•SHIM - HIGH SHEAR TAPERED		4
	151-21111-17	•SHIM - HIGH SHEAR TAPERED		4
	151-21108-21	•SHIM - HORIZONTAL STABILIZER RIB		4
	AN509-416-16	•SCREW - MPI (ATTACHING SEAL & FTG TO RIB)		2
	AN509-416-20	•SCREW - MPI (ATTACHING SEAL & FTG TO RIB)		2
	AN365-428	•NUT -		4
	AN509-516-15	•SCREW - MPI (ATTACHING SEAL & FTG TO RIB)		4
	AN365-524	•NUT -		4
-49	151-21104-1	•DOUBLER - HORIZONTAL STABILIZER FWD BEAM REINF UPPER PORT		1
	151-21104-2	•DOUBLER - HORIZONTAL STABILIZER FWD BEAM REINF UPPER STBD		1
-50	151-21110-1	•DOUBLER - HORIZONTAL STABILIZER FWD BEAM REINF LOWER PORT		1
	151-21110-2	•DOUBLER - HORIZONTAL STABILIZER FWD BEAM REINF LOWER STBD		1
-51	170-21102-1	•DOUBLER - HOR/STAB REAR BEAM UPPER PORT		1
	170-21102-2	•DOUBLER - HOR/STAB REAR BEAM UPPER STBD		1
-52	170-21105-1	•FILLER - HOR/STAB REAR BEAM ATT UPPER PORT		1
	170-21105-2	•FILLER - HOR/STAB REAR BEAM ATT UPPER STBD		1
-53	170-21103-1	•DOUBLER - HOR/STAB REAR BEAM LOWER PORT		1
	170-21103-2	•DOUBLER - HOR/STAB REAR BEAM LOWER STBD		1
	AN509-10-15	•SCREW - MPI (UPPER SKIN ATTACHING)		6
	AN960-10	•WASHER -		6
	AN365-1032	•NUT -		6
	AN509-416-18	•SCREW - MPI (UPPER SKIN ATTACHING)		2
	AN509-416-17	•SCREW - MPI (UPPER SKIN ATTACHING)		2
	AN509-416-16	•SCREW - MPI (UPPER SKIN ATTACHING)		2
	AN960-416	•WASHER -		6
	AN365-428	•NUT -		6
-54	170-21107-1	•DOUBLER - HOR/STAB TIP ATT STA 72 PORT		2
	170-21107-2	•DOUBLER - HOR/STAB TIP ATT STA 72 STBD		2
-55	170-21001-3	•SKIN - LEADING EDGE TO BEAM PORT		1
	170-21001-4	•SKIN - LEADING EDGE TO BEAM STARBOARD		1
-56	170-21001-5	•SKIN - BEAM TO TRAILING EDGE UPPER PORT		1
	170-21001-6	•SKIN - BEAM TO TRAILING EDGE UPPER STBD		1
-57	151-21132-1	•DOUBLER - HORIZONTAL STAB. ACC COVER PORT		1
	151-21132-2	•DOUBLER - HORIZONTAL STAB. ACC COVER STBD		1
-58	151-21113-1	•COVER - HORIZONTAL STAB. INBD RIB ACC PORT		1
	151-21113-2	•COVER - HORIZONTAL STAB. INBD RIB ACC STBD		1
	AN509-10-9	•SCREW - MPI (COVER ATTACHING)		30
-59	170-21001-7	•SKIN - BEAM TO TRAILING EDGE LOWER PORT		1
	170-21001-8	•SKIN - BEAM TO TRAILING EDGE LOWER STBD		1
	AN509-10-12	•SCREW - MPI		8
	AN509-10-11	•SCREW - MPI		2
	AN509-10-14	•SCREW - MPI		5
	AN509-10-16	•SCREW - MPI		1
	AN960-10	•WASHER -		16
	AN365-1032	•NUT -		16
	AN509-416-12	•SCREW - MPI (SKIN ATTACHING)		2
	AN509-416-16	•SCREW - MPI (SKIN ATTACHING)		2
	AN509-416-13	•SCREW - MPI (SKIN ATTACHING)		2
	AN960-416	•WASHER -		6
	AN364-428	•NUT -		6
	AN509-416-16	•SCREW - MPI (SKIN ATTACHING)		2

FIGURE AND INDEX NUMBER	GROUP / MAJOR ASSEMBLY / PART NUMBER	EMPENNAGE / HORIZONTAL STABILIZER / 1234567 NOMENCLATURE	CODE	UNITS PER ASSY
27 -	AN960-416	•WASHER -		2
	AN365-428	•NUT - MPI		2
	AN509-416R16	•SCREW - MPI (SKIN ATTACHING)		2
	AN509-416R13	•SCREW - MPI		2
	AN960-416	•WASHER -		4
	AN364-428	•NUT -		4
-60	AN7510-1	•PLATE -		1
-61	170-21311	•TIP ASSY - HORIZONTAL STABILIZER		2
-62	170-21128	••RIB - HORIZONTAL STABILIZER TIP		1
-63	AN509-10-9	•SCREW - MPI (TIP TO RIB ATTACHING)		20
	NAS221-8	•SCREW - (TIP TO CLIP ATTACHING)		4
-64	170-22409	LINK - ELEVATOR ATTACHING (SEE FIG. 28)		REF
-65	165-22411	LINK - ELEVATOR HINGE OUTBD (SEE FIG. 28)		REF
		-000-		

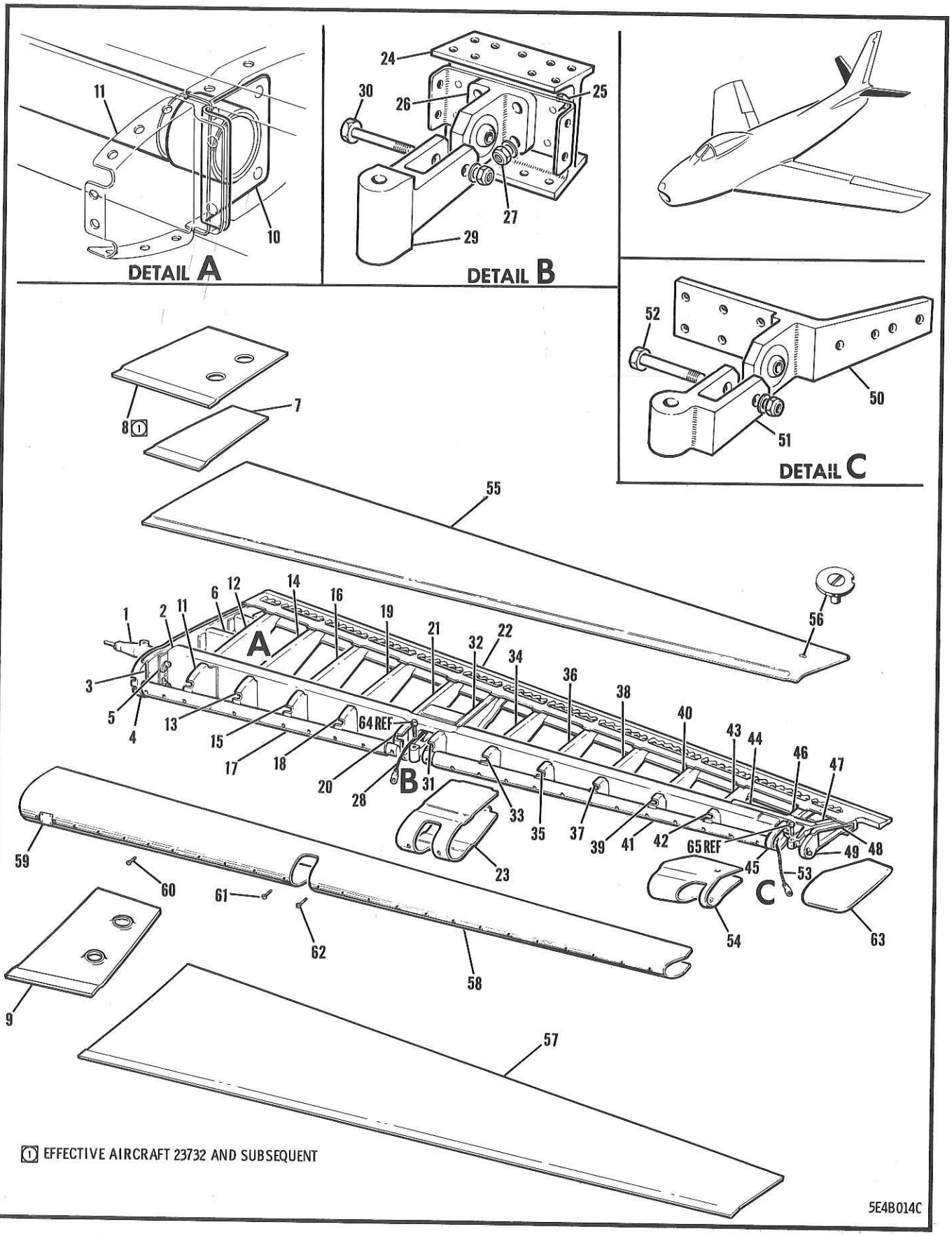

FIGURE 28 EMPENNAGE ELEVATOR

FIGURE AND INDEX NUMBER	GROUP / MAJOR ASSEMBLY / PART NUMBER	EMPENNAGE / EMPENNAGE ELEVATOR / 1234567 NOMENCLATURE	CODE	UNITS PER ASSY
28 -	170-22001-51	ELEVATOR ASSY - COMPLETE (SEE FIG. 26)	001-300	2
	170-22001-800	ELEVATOR ASSY - COMPLETE	D3	2
	170-22001-815	ELEVATOR ASSY - COMPLETE	G3	2
	170-22001-831	ELEVATOR ASSY - COMPLETE	G1	2
	170-22001-821	ELEVATOR ASSY - COMPLETE	732-	2
		OR		
	170-22001-823	ELEVATOR ASSY - COMPLETE		
		OR		
	170-22001-833	ELEVATOR ASSY - COMPLETE		
		OR		
	170-22001-841	SPARE PART ASSY FOR 170-22001-51 & -800 & -815 & -831 & -821 & -837		
- 1	170-22434	.TORQUE TUBE ASSY - ELEVATOR MPI	001-300	1
	170-22434-800	.TORQUE TUBE ASSY - ELEVATOR MPI	301-	1
- 2	170-22301-51	.BEAM - ELEVATOR		1
- 3	170-22007	.RIB - ELEVATOR STA 8 CANTED		1
- 4	170-22008	.RIB - ELEVATOR STA 8 CANTED		1
- 5	170-22101	.CLIP - ELEVATOR BEAM TO INBD RIB ATTACHING		1
	AN520-10R8	.SCREW -		2
- 6	170-22117	.INTERCOSTAL - ELEVATOR HINGE STA 8 INTER		1
	170-22118	.INTERCOSTAL - ELEVATOR HINGE STA 8 REAR		1
- 7	170-22001-7	.DOUBLER - ELEVATOR REINFORCING STA 14	001-731	1
- 8	170-22001-811	.DOUBLER - ELEVATOR REINFORCING STA 14	732-	1
- 9		.DELETED		
-10	170-22427	.COLLAR ASSY - ELEVATOR TORQUE TUBE MPI		1
-11	170-22014	.RIB ASSY - ELEVATOR STA 14 NOSE		1
-12	170-22015	.RIB - ELEVATOR STA 14		1
-13	170-22019	.RIB ASSY - ELEVATOR STA 19 NOSE		1
-14	170-22020	.RIB - ELEVATOR STA 19		1
	170-22102-3	.CLIP - ELEVATOR RIB TO BEAM ATT (STA 19)		1
		OR		
	170-22102-953	.CLIP - ELEVATOR RIB TO BEAM ATT (STA 19)		
-15	170-22024	.RIB ASSY - ELEVATOR STA 24 NOSE		1
-16	170-22025	.RIB - ELEVATOR STA 24		1
	170-22102-5	.CLIP - ELEVATOR RIB TO BEAM ATT (STA 24)		1
		OR		
	170-22102-955	.CLIP - ELEVATOR RIB TO BEAM ATT (STA 24)		
-17	170-22440	.WEIGHT ASSY - ELEVATOR STA 8-34	001-662	1
	170-22440-800	.WEIGHT ASSY - ELEVATOR STA 8-34	663-	1
	170-22440-801	..PLATE - ELEVATOR WEIGHT	663-	4
	170-22440-802	..PLATE - ELEVATOR WEIGHT	663-	1
	AN535-2-4	..SCREW -	001-662	12
	AN535-2-4	..SCREW -	663-	16
-18	170-22029	.RIB ASSY - ELEVATOR STA 29 NOSE		1
-19	170-22030	.RIB - ELEVATOR STA 29		1
	170-22102-7	.CLIP - ELEVATOR RIB TO BEAM ATT (STA 29)		1
		OR		
	170-22102-957	.CLIP - ELEVATOR RIB TO BEAM ATT (STA 29)		
-20	170-22034	.RIB ASSY - ELEVATOR STA 34 NOSE		1
-21	170-22035	.RIB - ELEVATOR STA 34		1
	170-22102-9	.CLIP - ELEVATOR RIB TO BEAM ATT (STA 34)		1
		OR		
	170-22102-959	.CLIP - ELEVATOR RIB TO BEAM ATT (STA 34)		
-22	170-22420	.STRIP - ELEVATOR TRAILING EDGE		1
-23	170-22111	.DOUBLER - ELEVATOR INTERHINGE REINFORCING		1
-24	170-22114	.SUPPORT ASSY - ELEVATOR HINGE STA 36		1
	AN3-5A	..BOLT - MPI		3
-25	AN3-6A	..BOLT - MPI		1
-26	170-22408	.FITTING ASSY - ELEVATOR HINGE INTERMEDIATE		1
	AN200KP4	..BEARING -		1
	AN960D10	.WASHER -		4
-27	AN365-1032	.NUT - MPI		4
-28	6043-4-4-6	.JUMPER - (JNI) (BONDING)		1

FIGURE AND INDEX NUMBER	GROUP	EMPENNAGE	CODE	UNITS PER ASSY
	MAJOR ASSEMBLY	EMPENNAGE ELEVATOR		
	PART NUMBER	1234567 NOMENCLATURE		
28 -29	170-22409	•LINK - ELEVATOR HINGE STA 36		1
-30	AN174-12A	•BOLT - MPI		1
	AN960D416	•WASHER -		1
	AN364-428	•NUT -		1
-31	170-22037	•RIB ASSY - ELEVATOR STA 37 NOSE	A3	1
	170-22037-803	•RIB ASSY - ELEVATOR STA 37 NOSE	G2	1
		OR		
	170-22037-809	•RIB ASSY - ELEVATOR STA 37 NOSE		
	13B-21021	•SPARE PART ASSY FOR 170-22037 & 170-22037-803 & -809		
-32	170-22038	•RIB - ELEVATOR STA 37		1
	170-22102-11	•CLIP - ELEVATOR RIB TO BEAM ATT (STA 37)		1
		OR		
	170-22102-961	•CLIP - ELEVATOR RIB TO BEAM ATT (STA 37)		
-33	170-22043	•RIB ASSY - ELEVATOR STA 43 NOSE		1
-34	170-22044	•RIB - ELEVATOR STA 43		1
	170-22102-13	•CLIP - ELEVATOR RIB TO BEAM ATT (STA 43)		1
		OR		
	170-22102-963	•CLIP - ELEVATOR RIB TO BEAM ATT (STA 34)		
-35	170-22048	•RIB ASSY - ELEVATOR STA 48 NOSE		1
-36	170-22049	•RIB - ELEVATOR STA 48		1
	170-22102-15	•CLIP - ELEVATOR RIB TO BEAM ATT (STA 48)		1
		OR		
	170-22102-965	•CLIP - ELEVATOR RIB TO BEAM ATT (STA 48)		
-37	170-22054	•RIB ASSY - ELEVATOR STA 54 NOSE		1
-38	170-22055	•RIB - ELEVATOR STA 54		1
	170-22102-17	•CLIP - ELEVATOR RIB TO BEAM ATT (STA 54)		1
		OR		
	170-22102-967	•CLIP - ELEVATOR RIB TO BEAM ATT (STA 54)		
-39	170-22059	•RIB ASSY - ELEVATOR STA 59 NOSE		1
-40	170-22060	•RIB - ELEVATOR STA 59		1
	170-22102-19	•CLIP - ELEVATOR RIB TO BEAM ATT (STA 59)		1
		OR		
	170-22102-969	•CLIP - ELEVATOR RIB TO BEAM ATT (STA 59)		
-41	170-22441	•WEIGHT ASSY - ELEVATOR STA 37-70	001-662	1
	170-22441-800	•WEIGHT ASSY - ELEVATOR STA 37-70	663-	1
	170-22441-803	••PLATE - ELEVATOR WEIGHT	663-	1
	170-22441-801	••PLATE - ELEVATOR WEIGHT	663-	6
	AN535-2-4	••SCREW -	001-662	14
	AN535-2-4	••SCREW -	663-	22
	170-22001-816	•WASHER - (MAKE FROM AN960D10L)	663-	24
-42	170-22065	•RIB ASSY - ELEVATOR STA 65 NOSE		1
-43	170-22066	•RIB - ELEVATOR STA 65		1
	170-22102-21	•CLIP - ELEVATOR RIB TO BEAM ATT (STA 65)		1
		OR		
	170-22102-971	•CLIP - ELEVATOR RIB TO BEAM ATT (STA 65)		
-44	170-22115	•INTERCOSTAL - ELEVATOR HINGE STA 72	001-731	1
	170-22115-800	•INTERCOSTAL - ELEVATOR HINGE STA 72	732-	1
-45	170-22069	•RIB ASSY - ELEVATOR STA 70 NOSE		1
-46	170-22070	•RIB - ELEVATOR STA 70		1
	170-22102-23	•CLIP - ELEVATOR RIB TO BEAM ATT (STA 70)		1
		OR		
	170-22102-973	•CLIP - ELEVATOR RIB TO BEAM ATT (STA 70)		
	172-22100	•CLIP - ELEVATOR STA 70 RIB TO INTERCOSTAL		1
		OR		
	172-22100-801	•CLIP - ELEVATOR STA 70 RIB TO INTERCOSTAL		
	170-22103	•CLIP - ELEVR STA 70 INTERCST TO NOSE RIB		1
		OR		
	170-22103-951	•CLIP - ELEVR STA 70 INTERCST TO NOSE RIB		
	170-22104	•CLIP - ELEVATOR STA 70 INTERCOSTAL TO RIB		1
		OR		
	170-22104-953	•CLIP - ELEVATOR STA 70 INTERCOSTAL TO RIB		

FIGURE and INDEX NUMBER	PART NUMBER	1 2 3 4 5 6 7 NOMENCLATURE	Units Per Assy	Usage on Code
	GROUP	EMPENNAGE		
	MAJOR ASSEMBLY	EMPENNAGE ELEVATOR		
28 -47	170-22071	Rib - Elevator Sta. 71		1
		or		
	170-22071-800	Rib - Elevator Sta. 71		
-48	170-22072	Rib - Elevator Sta. 72		1
		or		
	170-22072-951	Rib - Elevator Sta. 72		
-49	170-22073	Rib Assembly - Elevator Sta. 73 Nose		1
-50	165-22410	Fitting Assembly - Elevator Hinge Outboard Sta. 72		1
	AN200KS4	Bearing -		1
	165-22410-803	Fitting Assembly - Elevator hinge outboard		1
		Bearing (KAHR)		1
		Fitting - Lubrication		1
		For use with 170-22001-845 elevators		
-51	165-22411	Link - Elevator Hinge Outboard		1
	13B23028	Link - Elevator Hinge Outboard		
		For use with 170-22001-845 elevators		
-52	AN174-12A	Bolt - MP1		1
	AN174-11A	Bolt - MP1		1
		For use with 170-22001-845 elevators		
	AN960D416	Washer -		1
	AN364-428	Nut -		1
-53	6043-4-4-6	Jumper - (JN1) (Bonding)	001-100	1
	AN200KP4	Ball - Bearing - Elevator Hinge Fitting		1
	AN3-4A	Bolt - MP1		1
	AN960D10	Washer -		1
-54	170-22112	Doubler - Elevator Outboard Hinge Reinf		1
-55	170-22001-3	Skin - Elevator Upper		1
-56	A6912-832-1	Plate - Speed-Nut Patch (Tin)		1
-57	170-22001-4	Skin - Elevator Lower		1
-58	170-22001-5	Skin - Elevator Nose		1
-59	AN7510-2	Plate -		1
-60	AN509-10-13	Screw -	001-662	6
-61	AN509-10-14	Screw -	001-662	5
	AN509-10-13	Screw -	663-	11
	AN960C10L	Washer -		1
	AN365-1032	Nut - MP1		1
-62	AN509-10-14	Screw -	001-662	13
	AN509-10-14	Screw -	663-	6
	AN509-10-15	Screw -	663-	7
	AN960C10L	Washer -		1
	AN365-1032	Nut - MP1		1
-63	170-22311	Tip - Elevator		1
-64	NAS144-41A	Bolt - (Inbd Hinge Attaching) (See Figure 26)		Ref.
-65	NAS464-4-19	Shear-Bolt - (Outbd Hinge Att) (See Figure 26)		Ref.

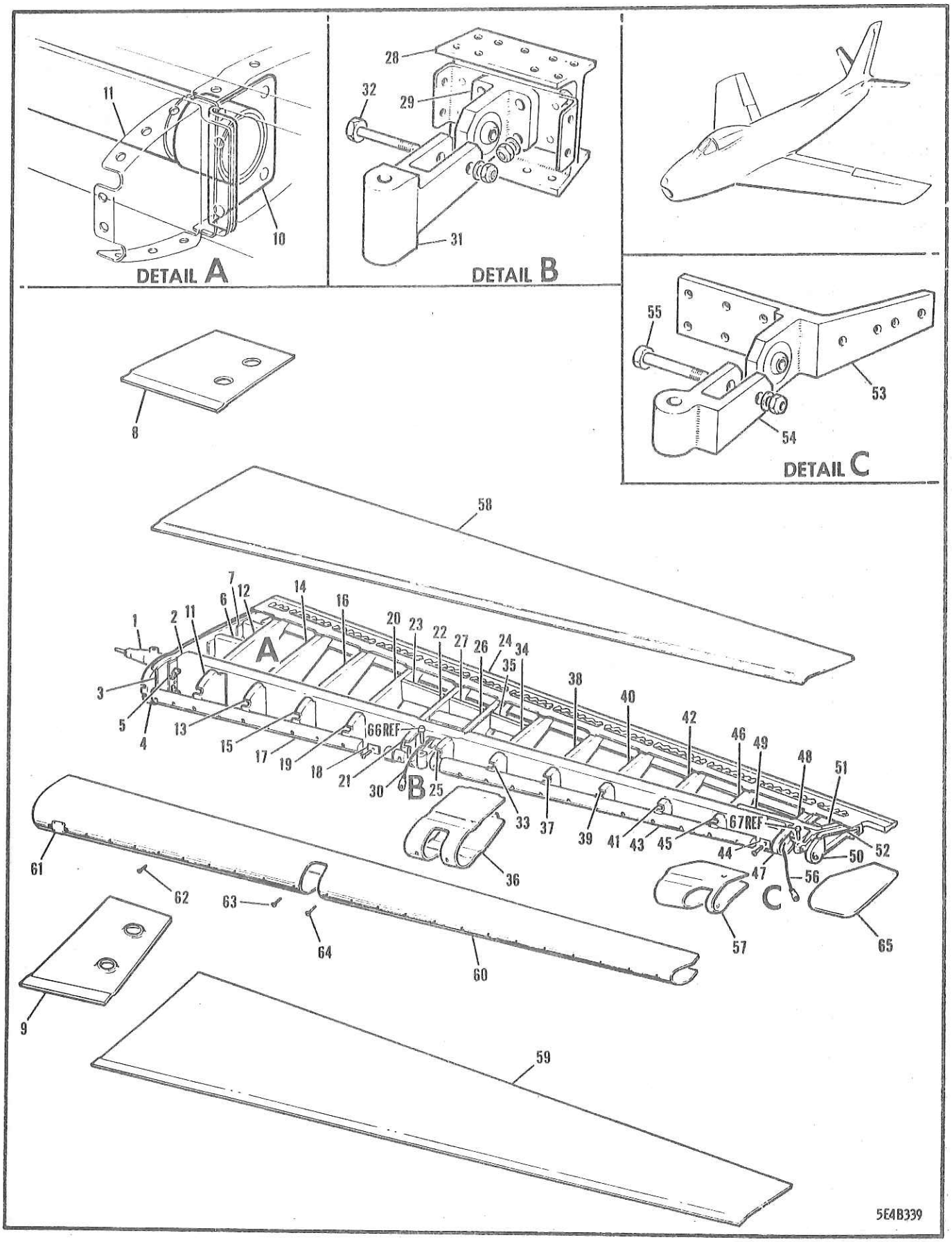

FIGURE 28A EMPENNAGE ELEVATOR

FIGURE AND INDEX NUMBER	GROUP	EMPENNAGE	CODE	UNITS PER ASSY
	MAJOR ASSEMBLY	EMPENNAGE ELEVATOR		
	PART NUMBER	1234567 NOMENCLATURE		
28A-	13B-21022	ELEVATOR ASSY - COMPLETE (SEE FIG. 26)		2
- 1	170-22434-801	.TORQUE TUBE ASSY - ELEVATOR MPI		1
- 2	13B-21032	.BEAM - ELEVATOR		1
- 3	170-22007-21	.RIB - ELEVATOR STA 8 CANTED		1
- 4	170-22008-21	.RIB - ELEVATOR STA 8 CANTED		1
- 5	170-22101	.CLIP - ELEVATOR BEAM TO INBD RIB		1
	AN520-10R8	.SCREW -		2
- 6	170-22117-21	.INTERCOSTAL - ELEVATOR HINGE STA 8 INTER		1
- 7	170-22118-21	.INTERCOSTAL - ELEVATOR HINGE STA 8 REAR		1
- 8	13B-21023-1	.DOUBLER - ELEVATOR (REINFORCING STA 14)		1
- 9	13B-21023-2	.DOUBLER - ELEVATOR (REINFORCING STA 14)		1
-10	170-22427	.COLLAR ASSY - ELEVATOR TORQUE TUBE(STA 14)		1
-11	170-22014-801	.RIB ASSY - ELEVATOR STA 14 NOSE		1
-12	170-22015-21	.RIB - ELEVATOR STA 14		1
-13	170-22019-801	.RIB ASSY - ELEVATOR STA 19 NOSE		1
-14	170-22020-21	.RIB - ELEVATOR STA 19		1
	170-22102-803	.CLIP - ELEVATOR RIB TO BEAM (STA 19)		1
-15	170-22024-801	.RIB ASSY - ELEVATOR STA 24 NOSE		1
-16	170-22025-21	.RIB - ELEVATOR STA 24		1
	170-22102-805	.CLIP - ELEVATOR RIB TO BEAM (STA 24)		1
	170-22440-803	.WEIGHT ASSY - ELEVATOR STA 8 TO STA 34		1
-17	170-22440-23	..WEIGHT - ELEVATOR		1
	170-22440-25	..PLATE - ELEVATOR (WEIGHT TO CANTED RIB ATTACHING STA 8)		1
-18	170-22440-801	..PLATE - ELEVATOR WEIGHT		4
	AN535-2-4	..SCREW - (170-22440-801 TO WEIGHT ATTACHING)		16
-19	170-22029-801	.RIB ASSY - ELEVATOR STA 29 NOSE		1
-20	170-22030-21	.RIB - ELEVATOR STA 29		1
	170-22102-807	.CLIP - ELEVATOR RIB TO BEAM (STA 29)		1
-21	13B-21039	.RIB ASSY - ELEVATOR STA 34 CAST NOSE		1
-22	170-22035-21	.RIB - ELEVATOR STA 34		1
	170-22102-809	.CLIP - ELEVATOR RIB TO BEAM (STA 34)		1
-23	13B-21034	.INTERCOSTAL - ELEVATOR STA 29 TO 34 INTER		1
	13B-21033-13	.CLIP - ELEVATOR CENTRE (STA 29)		1
	13B-21033-7	.CLIP - ELEVATOR CENTRE (STA 34)		1
-24	170-22420-21	.STRIP - ELEVATOR TRAILING EDGE		1
-25	13B-21038	.RIB ASSY - ELEVATOR STA 37 CAST NOSE		1
-26	170-22038-21	.RIB - ELEVATOR STA 37		1
	170-22102-811	.CLIP - ELEVATOR RIB TO BEAM (STA 37)		1
-27	13B-21036	.INTERCOSTAL - ELEVATOR STA 34 TO 37 INTER		1
	13B-21033-11	.CLIP - ELEVATOR CENTRE (STA 34)		1
	13B-21033-5	.CLIP - ELEVATOR CENTRE (STA 37)		1
-28	170-22114-801	.SUPPORT ASSY - ELEVATOR HINGE (STA 36)		1
	AN3-5A	..BOLT - (SUPPORT TO FITTING ATTACHING)		3
	AN3-6A	..BOLT - (SUPPORT TO FITTING ATTACHING)		1
-29	170-22408	.FITTING ASSY - ELEVATOR HINGE INTERMEDIATE (STA 35)		1
	AN200KP4	..BALL-BEARING - ELEVATOR HINGE INTER		1
	AN960D10	.WASHER -		4
	AN365-1032	.NUT -		4
-30	6043-4-4-6	.JUMPER - (JNI) (BONDING)		1
-31	170-22409	.LINK - ELEVATOR HINGE (STA 36)		1
-32	AN174-12A	.BOLT - (HINGE TO LINK ATTACHING)		1
	AN960D416	.WASHER -		1
	AN364-428	.NUT -		1
-33	170-22043-801	.RIB ASSY - ELEVATOR STA 43 NOSE		1
-34	170-22044-21	.RIB - ELEVATOR STA 43		1
	170-22102-813	.CLIP - ELEVATOR RIB TO BEAM (STA 43)		1
-35	13B-21035	.INTERCOSTAL - ELEVATOR STA 37 TO 43 INTER		1
	13B-21033-9	.CLIP - ELEVATOR CENTRE STA 37		1
	13B-21033-3	.CLIP - ELEVATOR CENTRE STA 43		1
-36	13B-21029	.DOUBLER - ELEVATOR CENTRE STA 29 TO STA 43		1
-37	170-22048-801	.RIB ASSY - ELEVATOR STA 48 NOSE		1

FIGURE and INDEX NUMBER	GROUP / MAJOR ASSEMBLY / PART NUMBER	1 2 3 4 5 6 7	EMPENNAGE / EMPENNAGE ELEVATOR / NOMENCLATURE	Units Per Assy	Usage on Code
28A -38	170-22049-21		Rib - Elevator Sta. 48		1
	170-22102-815		Clip - Elevator rib to beam (Sta. 48)		1
-39	170-22054-801		Rib Assembly - Elevator Sta. 54 nose		1
-40	170-22055-21		Rib - Elevator Sta. 54		1
	170-22102-817		Clip - Elevator rib to beam (Sta. 54)		1
-41	170-22059-801		Rib Assembly - Elevator Sta. 59 nose		1
-42	170-22060-21		Rib - Elevator Sta. 59		1
	170-22102-819		Clip - Elevator rib to beam (Sta. 59)		1
	170-22441-805		Weight Assembly - Elevator Sta. 37 to Sta. 70		1
-43	170-22441-23		Weight - Elevator Sta. 37 to Sta. 70		1
	170-22441-25		Plate - Elevator (Weight to rib attaching Sta. 70)		1
-44	170-22441-801		Plate - Elevator weight		6
	AN535-2-4		Screw - (170-22441-801 to weight attaching)		24
-45	170-22065-801		Rib Assembly - Elevator Sta. 65 nose		1
-46	170-22066-21		Rib - Elevator Sta. 65		1
	170-22102-821		Clip - Elevator rib to beam (Sta. 65)		1
-47	170-22069-23		Rib Assembly - Elevator Sta. 70		1
-48	170-22070-21		Rib - Elevator Sta. 70		1
-49	13B-21031		Intercostal Assembly - Elevator (Sta. 65 to 71)		1
	13B-21037		Clip - Elevator (Outboard) (Sta. 65)		2
	13B-21026		Clip - Elevator intercostal to rib (Sta. 70)		1
	13B-21027		Clip - Elevator intercostal to rib (Sta. 70)		1
	170-22102-825		Clip - Elevator rib to beam (Sta. 70)		1
-50	170-22073-801		Rib Assembly - Elevator Sta. 73 nose		1
-51	170-22072-21		Rib - Elevator Sta. 72		1
-52	170-22071-21		Rib - Elevator Sta. 73		1
-53	165-22410-801		Fitting Assembly - Elevator hinge outboard (Sta. 72)		1
	165-22410-803 *		Fitting Assembly - Elevator hinge outboard (Sta. 72)		1
	KWB4-G-6R *		Bearing (KOHR)		1
	NAS516-1		Fitting - Lubrication		1
			For use with 13B21022-801 and -901 elevators *		
	13B-21028-3		Clip - Elevator intercostal to rib (Sta. 70)		1
	13B-21028-5		Clip - Elevator intercostal to rib (Sta. 70)		1
-54	165-22411		Link - Elevator hinge outboard (Sta. 72)		1
	13B23028 *		Link - Elevator hinge outboard (Sta. 72)		1
			For use with 13B21022-801 and -901 elevators *		
-55	AN174-12A		Bolt - (fitting to link attaching)		1
	AN174-11A *		Bolt - Fitting to link attaching *		1
			For use with 13B21022-801 and -901 elevators *		
	AN960-D10		Washer -		1
	AN364-428		Nut -		1
-56	6043-4-4-5		Jumper - (JN1) (Bonding)		1
	AN3-4A		Bolt -		1

FIGURE and INDEX NUMBER	GROUP: EMPENNAGE MAJOR ASSEMBLY: EMPENNAGE ELEVATOR PART NUMBER	1 2 3 4 5 6 7 NOMENCLATURE	Units Per Assy	Usage on Code
28A -56	AN960D10	Washer -		1
-57	13B-21030	Doubler - Elevator outboard (Sta. 65 to 73)		1
-58	13B-21022-3	Skin - Elevator upper		1
-59	13B-21022-4	Skin - Elevator lower		1
-60	13B-21022-5	Skin - Elevator nose		1
-61	AN7510-2	Name plate - (Sta. 11)		1
-62	AN509-10R13	Screw - (Elevator nose skin and weight attaching)		4
-63	AN509-10R14	Screw - (Elevator nose skin and weight attaching)		12
-64	AN509-10R16	Screw - (Elevator nose skin and weight attaching)		8
-65	170-22311	Tip - Elevator (Sta. 73)		1
-66	NAS144-41A	Bolt - (Inboard hinge attaching) (See Figure 26)		Ref
-67	NAS464-4-19	Shear-Bolt - (Outboard hinge attaching) (See Figure 26)		Ref

FIGURE AND INDEX NUMBER	PART NUMBER	1234567 NOMENCLATURE	CODE	UNITS PER ASSY
		THIS PAGE DELETED		

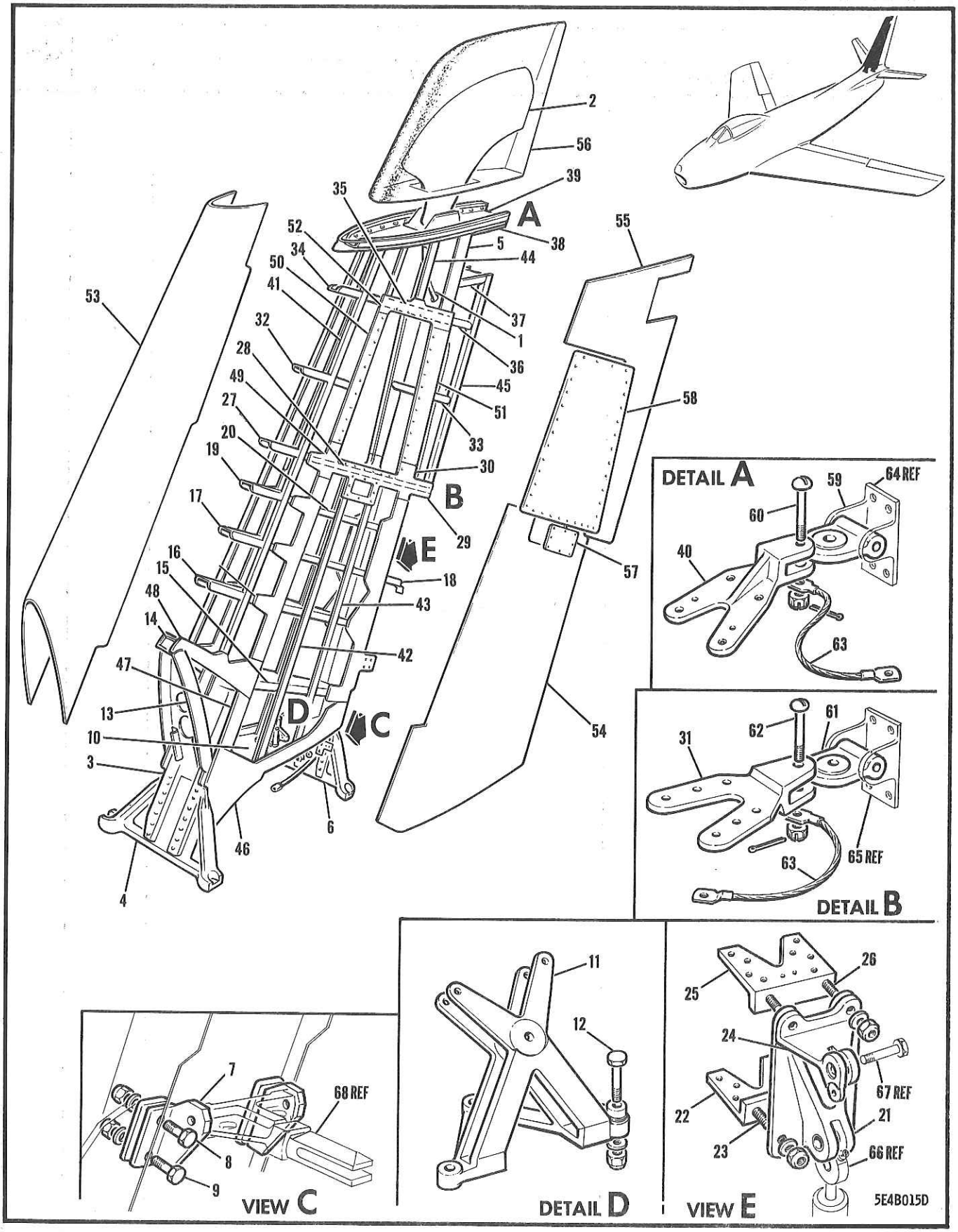

FIGURE 29 VERTICAL STABILIZER

FIGURE AND INDEX NUMBER	GROUP / MAJOR ASSEMBLY / PART NUMBER	EMPENNAGE / VERTICAL STABILIZER / 1234567 NOMENCLATURE	CODE	UNITS PER ASSY
29 -	170-23001-801	STABILIZER ASSY - VERTICAL COMPLETE (SEE FIG. 26)	001-160	1
	170-23001-805	STABILIZER ASSY - VERTICAL COMPLETE	161-662	1
	170-23001-807	STABILIZER ASSY - VERT COMPLETE	663-	1
- 1	170-71011	.RADIO EQUIP. INSTL - VERTICAL STABILIZER (SEE SECTION 18)		REF
- 2	151-71012-802	.ANTENNA ASSY - RADIO VHF-IFF COMBINATION (SEE SECTION 18)		REF
	151-23002-801	.FRAME ASSY - VERTICAL STABILIZER	001-160	1
	151-23002-803	.FRAME ASSY - VERTICAL STABILIZER	161-662	1
	151-23002-805	.FRAME ASSY - VERTICAL STABILIZER	663-	1
- 3	151-23301-53	..BEAM ASSY - VERTICAL STABILIZER FORWARD		1
	151-23115-3	...STRIP - VERTICAL STAB. FWD BEAM PORT CAP		1
	151-23115-4	...STRIP - VERTICAL STAB. FWD BEAM STBD CAP		1
- 4	151-23402-3	...FITTING - VERTICAL STAB. FORWARD BEAM TO FUSELAGE ATTACHING		1
- 5	151-23302-801	..BEAM ASSY - VERTICAL STABILIZER REAR		1
	151-23116-951	...STRIP - VERT/STAB REAR BEAM PORT CAP		1
	151-23116-952	...STRIP - VERT/STAB REAR BEAM STBD CAP		1
	AN174-7A	...BOLT -		4
	151-23302-951	...SHIM - VERTICAL STABILIZER REAR BEAM MPI		1
	151-23302-952	...SHIM - VERTICAL STABILIZER REAR BEAM MPI		1
- 6	151-23404-3	...FITTING - VERTICAL STAB. REAR BEAM TO FUSELAGE ATTACHING		1
	161-52008-1	...CLIP ASSY - FLIGHT CTL EMPENNAGE SHIELD		1
	161-52008-2	...CLIP ASSY - FLIGHT CTL EMPENNAGE SHIELD		1
- 7	170-21417-1	...FITTING - HORIZONTAL STABILIZER FWD BEAM SNUBBER ATTACHING ANGLE PORT		1
	170-21417-2	...FITTING - HORIZONTAL STABILIZER FWD BEAM SNUBBER ATTACHING ANGLE STARBOARD		1
	151-23302-15	...SPACER - VERTICAL STABILIZER BEAM		2
- 8	AN175-20A	...BOLT -		2
	AN960D516	...WASHER -		2
	AN365-524	...NUT -		2
- 9	AN176-21A	...BOLT -		2
	AN960D616	...WASHER -		2
	AN365-624	...NUT -		2
-10	140-23005	..RIB ASSY - VERTICAL STAB. STA 2 CANTED		1
	151-23119	..FAIRLEAD - VERTICAL STABILIZER STA 3		2
-11	151-52424-1	..BRACKET ASSY - RUDDER CTL FUS STA 377 LH		1
	151-52424-2	..BRACKET ASSY - RUDDER CTL FUS STA 377 RH		1
	AN392-35	...PIN -		2
	AN380-2-1	...COTTER-PIN -		2
-12	AN3-6A	..BOLT - MPI		6
	AN960D10L	..WASHER -		6
	AN365-1032	..NUT -		6
-13	151-23040-101	..RIB ASSY - VERTICAL STAB. DORSAL FIN ATT		1
-14	151-23007	..RIB ASSY - VERT/STAB STA 16 CANTED NOSE		1
-15	151-23006	..INTERRIB ASSY - VERT/STAB STA 6 CANTED		1
-16	151-23013	..RIB ASSY - VERTICAL STAB. STA 12 NOSE		1
	151-23012	..INTERRIB ASSY - VERTICAL STAB. STA 12		1
-17	170-23023	..RIB ASSY - VERTICAL STAB. STA 19 NOSE		1
	AN520-10-5	..SCREW -		1
	170-23022	..INTERRIB ASSY - VERTICAL STAB.		1
-18	172-23018	..RIB ASSY - VERTICAL STAB. STA 18 (TE)	001-160	1
	172-23018-801	..RIB ASSY - VERTICAL STAB. STA 18 (TE)	161-662	1
	172-23018-803	..RIB ASSY - VERTICAL STAB. STA 18 (TE)	663-	1
	172-23018-11	...RIB - VERTICAL STABILIZER		1
	172-23018-7	...ANGLE - VERTICAL STABILIZER RIB	001-160	1
	172-23018-951	...ANGLE - VERTICAL STABILIZER RIB	161-662	1

FIGURE AND INDEX NUMBER	GROUP EMPENNAGE MAJOR ASSEMBLY VERTICAL STABILIZER PART NUMBER	1234567 NOMENCLATURE	CODE	UNITS PER ASSY
29 -	172-23018-953	•••ANGLE - VERTICAL STABILIZER RIB	663-	1
	172-23018-9	•••ANGLE - VERTICAL STABILIZER		1
	NAS221-10	•••SCREW - (ANGLE TO RIB ATTACHING)		2
	NAS221-9	•••SCREW - (ANGLE TO RIB ATTACHING)		2
	172-23018-15	•••ANGLE - VERTICAL STABILIZER		1
	172-23018-16	•••ANGLE - VERTICAL STABILIZER		1
	AN3-4A	•••BOLT - (ANGLE TO RIB ATTACHING)		4
	AN365-1032	•••NUT -		4
	AN931-6-10	•••GROMMET - (AS PER EO 05-5E-6B/4)		1
-19	170-23026	••RIB ASSY - VERTICAL STAB. STA 25 NOSE		1
	AN520-10-5	••SCREW -		1
-20	170-23025	••INTERRIB ASSY - VERTICAL STAB. STA 25		1
-21	170-23416-7	••FITTING ASSY - HOR/STAB ACTUATOR UP. ATT		1
	4B19S10-013	•••BUSHING - PRESS-FIT PLAIN (NAA)		2
-22	170-23110	••CLIP ASSY - VERT/STAB STA 19 REAR BEAM		1
	6810-054	•••RETAINER - ONE-LUG BOLT (NSC)		2
-23	AN175-13A	•••BOLT - MPI		2
	AN960C516L	••WASHER -		2
	AN365-524	••NUT -		2
-24	176-52242	••BRACKET - HOR/STAB CTL ARTL FEEL ATT SUR	001-370	1
		OR		
	176-52242-10	••BRACKET - HOR/STAB CTL ARTL FEEL ATT SUR		
	176-52242-10	••BRACKET - HOR/STAB CTL ARTL FEEL ATT SUR	371-	1
-25	170-23111-51	••CLIP ASSY - VERT/STAB STA 25 REAR BEAM		1
	6810-054	•••RETAINER - ONE-LUG BOLT (NSC)		2
-26	AN175-15A	•••BOLT - MPI		2
	AN960C516L	••WASHER -		2
	AN365-524	••NUT -		2
-27	151-23035-10	••RIB ASSY - VERTICAL STAB. STA 33 NOSE		1
-28	151-23033	••INTERRIB - VERTICAL STABILIZER STA 33		1
-29	151-23036	••RIB - VERTICAL STAB. STA 33 TE (LOWER)	001-662	1
	151-23036-801	••RIB - VERTICAL STAB. STA 33 TE (LOWER)	663-	1
-30	140-23034	••RIB ASSY - VERTICAL STAB. STA 33 UP. (TE)	001-662	1
	140-23034-10	••RIB ASSY - VERTICAL STAB. STA 33 UP. (TE)	663-	1
-31	140-23408	••FITTING - VERTICAL STABILIZER INTERHINGE		1
-32	151-23045-10	••RIB - VERTICAL STABILIZER STA 45 NOSE		1
-33	151-23046	••RIB - VERTICAL STABILIZER STA 48 TE		1
	140-23100	••TEE - HORIZONTAL & VERT/STAB TE STIFF.		2
-34	151-23060	••RIB - VERTICAL STABILIZER STA 59 NOSE		1
-35	151-23059	••INTERRIB - VERTICAL STABILIZER STA 59		1
-36	151-23061	••RIB - VERTICAL STABILIZER STA 59 TE		1
	140-23100	••TEE - HORIZONTAL & VERT/STAB TE STIFF.		2
-37	140-23066	••RIB - VERTICAL STABILIZER STA 66 (TE)		1
-38	140-23073	••RIB ASSY - VERTICAL STAB. STA 74 (LOWER)		1
-39	151-23074	••RIB ASSY - VERTICAL STAB. STA 74 (UPPER)		1
		OR		
	151-23074-800	••RIB ASSY - VERTICAL STAB. STA 74 (UPPER)		
-40	161-23410	••FITTING - VERTICAL STABILIZER OUTBD HINGE		1
-41	151-23002-9	••STRINGER - VERTICAL STABILIZER PORT		1
	151-23002-10	••STRINGER - VERTICAL STABILIZER STARBOARD		1
-42	151-23002-11	••STRINGER - VERTICAL STABILIZER PORT		1
	151-23002-12	••STRINGER - VERTICAL STABILIZER STARBOARD		1
-43	151-23002-13	••STRINGER - VERTICAL STABILIZER PORT		1
	151-23002-14	••STRINGER - VERTICAL STABILIZER STARBOARD		1
-44	151-23002-15	••STRINGER - VERTICAL STABILIZER PORT		1
	151-23002-16	••STRINGER - VERTICAL STABILIZER STARBOARD		1
-45	151-23002-17	••STRINGER - VERTICAL STABILIZER PORT		1
	151-23002-18	••STRINGER - VERTICAL STABILIZER STARBOARD		1
-46	151-23100-1	••DOUBLER - VERTICAL STABILIZER FORWARD BEAM & CANTED RIB PORT		1

FIGURE AND INDEX NUMBER	GROUP	EMPENNAGE	CODE	UNITS PER ASSY
	MAJOR ASSEMBLY	VERTICAL STABILIZER		
	PART NUMBER	1234567 NOMENCLATURE		
29 -	151-23100-2	••DOUBLER - VERTICAL STABILIZER FORWARD BEAM & CANTED RIB STARBOARD		1
-47	151-23002-19	••DOUBLER - VERTICAL STABILIZER		1
	151-23002-20	••DOUBLER - VERTICAL STABILIZER		1
-48	151-23109	••DOUBLER - VERT/STAB CANTED NOSE RIB ATT		2
	151-23108	••SHIM - VERTICAL STABILIZER FRONT BEAM		2
	151-23107	••SHIM - VERTICAL STABILIZER REAR BEAM		2
-49	151-23101-1	••DOUBLER - VERTICAL STABILIZER STA 33 PORT		1
	151-23101-2	••DOUBLER - VERTICAL STABILIZER STA 33 STBD		1
-50	151-23102-1	••DOUBLER - VERTICAL STABILIZER FWD BEAM ANTENNA DOOR PORT		1
	151-23102-2	••DOUBLER - VERTICAL STABILIZER FWD BEAM ANTENNA DOOR STARBOARD		1
-51	151-23103-1	••DOUBLER - VERTICAL STABILIZER REAR BEAM ANTENNA DOOR PORT		1
	151-23103-2	••DOUBLER - VERTICAL STABILIZER REAR BEAM ANTENNA DOOR STARBOARD		1
-52	151-23106-1	••DOUBLER - VERTICAL STAB. STA 59 PORT		1
	151-23106-2	••DOUBLER - VERTICAL STAB. STA 59 STARBOARD		1
	151-23104-1	••DOUBLER - VERTICAL STAB. TIP ATT PORT		1
	151-23104-2	••DOUBLER - VERTICAL STAB. TIP ATT STBD		1
	151-23105	••CLIP - VERTICAL STAB TIP RIB ATTACHING		1
-53	151-23002-29	••SKIN - VERTICAL STABILIZER (LEADING EDGE)		1
-54	151-23002-31	••SKIN - VERTICAL STABILIZER PORT (LOWER)		1
	151-23002-32	••SKIN - VERTICAL STABILIZER STBD (LOWER)		1
-55	151-23002-7	••SKIN - VERTICAL STABILIZER PORT (UPPER)		1
	151-23002-8	••SKIN - VERTICAL STABILIZER STBD (UPPER)		1
	NAS221-10	•SCREW - (ANTENNA TO VERTICAL STAB ATT) (AS PER EO 05-5E-6A/198)		4
-56	140-23311-200	•TIP ASSY - VERTICAL STABILIZER		1
	AN509-10R9	•SCREW - (TIP ATTACHING)	001-691	18
	AN509-10R9	•SCREW - (TIP ATTACHING)	692-	20
	NAS221-9	•SCREW - (TIP ATTACHING)		6
	AN509-10R8	•SCREW - (TIP ATTACHING)		2
	AN960-10	•WASHER -		2
-57	151-23090	•DOOR ASSY - RADIO ANTENNA PLUG ACCESS		1
	9C1-1-5	••CHAIN - BEAD (NAA)		1
	AN509-10R9	•SCREW - (DOOR ATTACHING)		8
-58	151-23318-1	•DOOR ASSY - VERT/STAB RADIO ANT. ACC PORT		1
	151-23318-2	•DOOR ASSY - VERT/STAB RADIO ANT. ACC STBD		1
	NAS205-9	•SCREW - (DOOR ATTACHING)		72
-59	11B1-5	•LINK ASSY - BEARING (NAA) (UPPER)		1
-60	AN24-20	•BOLT - MPI (UPPER LINK ATTACHING)		1
-61	11B1-3	•LINK ASSY - BEARING (NAA) (LOWER)		1
-62	AN24-19	•BOLT - MPI (LOWER LINK ATTACHING)		1
	AN960D416	•WASHER -		2
-63	6043-4-4-4	•JUMPER - (JNI) (BONDING)		2
	AN320-4	•NUT -		2
	AN380-2-2	•PIN -		2
-64	73-22015	FITTING - ELEVATOR & RUDDER OUTBD UP. HINGE (SEE FIG. 30)		REF
-65	134-22405	FITTING - ELEVATOR & RUDDER INTERHINGE (SEE FIG. 30)		REF
-66	176-58706-151	CYLINDER ASSY - HYDRAULIC STABILIZER ACTE (SEE SECTION 11)		REF
-67	AN5H4A	BOLT - MPI (SEE FIG. 26)		REF
-68	170-21415-950	FITTING - FORWARD BEAM SNUBBER FORK (SEE FIG. 26)		REF

-000-

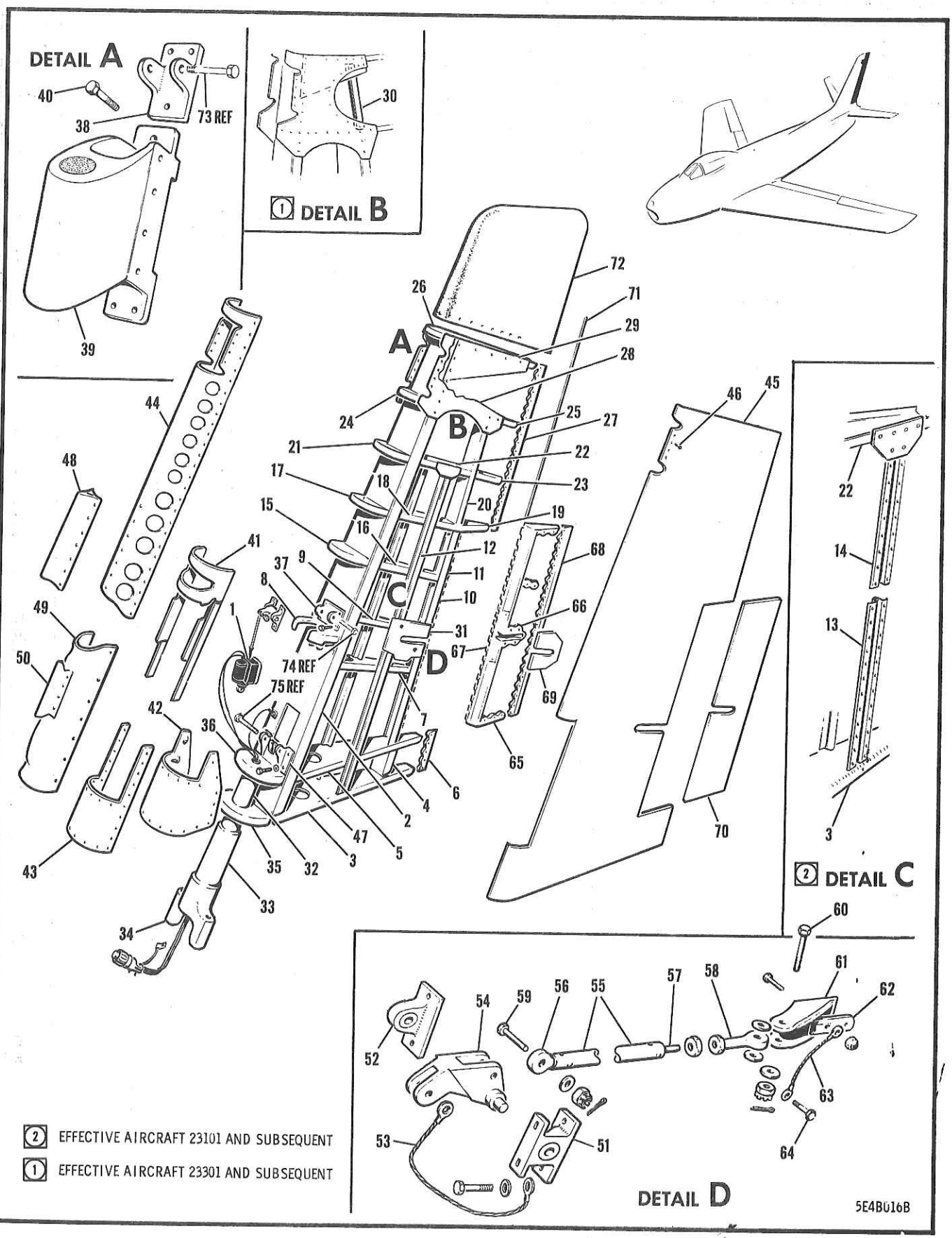

FIGURE 30 COMPLETE RUDDER

FIGURE AND INDEX NUMBER	GROUP EMPENNAGE MAJOR ASSEMBLY COMPLETE RUDDER PART NUMBER	1234567 NOMENCLATURE	CODE	UNITS PER ASSY
30 -	151-24001	RUDDER ASSY - COMPLETE (SEE FIG. 26)		1
- 1	151-54144	•ELECTRICAL EQUIP. INSTL - RUDDER (SEE SECTION 10)		REF
	151-24002	•FRAME ASSY - RUDDER		1
- 2	140-24301	••BEAM ASSY - RUDDER FORWARD		1
	140-24301-3	•••BEAM - RUDDER FORWARD		1
	140-24301-5	•••ANGLE - BEAM FORWARD STA 11-53 LH		1
	140-24301-6	•••ANGLE - BEAM FORWARD STA 11-53 RH		1
	140-24301-7	•••CHANNEL - BEAM FORWARD STA 15-24		1
	140-24301-17	•••ANGLE - BEAM FORWARD STA 15-24 LH (MAKE FROM 1E2 X 9-5/16) (NAA)		1
	140-24301-18	•••ANGLE - BEAM FORWARD STA 15-24 RH (MAKE FROM 1E2 X 9-5/16) (NAA)		1
	140-24301-23	•••SHIM - BEAM FORWARD STA 18		1
	140-24301-19	•••ANGLE - BEAM FORWARD STA 18		1
	140-24301-25	•••SHIM - BEAM FORWARD STA 22		1
	140-24301-21	•••ANGLE - BEAM FORWARD STA 22		1
	140-24085-1	•••DOUBLER - FORWARD BEAM REINFORCING STA 24-35 LH		1
	140-24085-2	•••DOUBLER - FORWARD BEAM REINFORCING STA 24-35 LH		1
	140-24301-11	•••ANGLE - BEAM FORWARD STA 26		1
	140-24301-13	•••ANGLE - BEAM FORWARD STA 34		1
	A3104-1	•••CLAMP - SPECIAL HARNESS (TIN)		1
	140-24301-9	•••CHANNEL - BEAM FORWARD STA 65-75		1
	140-24301-15	•••ANGLE - BEAM FORWARD STA 75		1
- 3	140-24011	••RIB - RUDDER STA 11		1
	151-24002-19	••SPACER - RUDDER RIB TO BEAM STA 11		1
	140-24082	••GUSSET - RUDDER & ELEVR STGR ATT STA 11		2
- 4	140-24302-3	••BEAM - RUDDER FALSE		1
- 5	140-24015	••RIB - RUDDER STA 15		1
	151-24002-27	••SPACER - RUDDER RIB TO BEAM STA 15		1
	140-24090-13	••ANGLE - RUDDER RIB ATTACHING STA 15		1
	140-24092	••ANGLE - RUDDER FALSE BEAM TO RIB ATT STA 15		1
	140-24086-3	••GUSSET - RUDDER TRIM TAB CUT-OUT REINF STA 15		1
	140-24086-5	••GUSSET - RUDDER TRIM TAB CUT-OUT REINF STA 15		1
- 6	151-24120-5	••STRIP - RUDDER TRAILING EDGE		1
- 7	140-24026	••RIB - RUDDER STA 26 CANTED		1
- 8	140-24032	••RIB - RUDDER STA 32 CANTED NOSE		1
- 9	140-24034	••RIB - RUDDER STA 34 CANTED		1
-10	140-24302-5	••BEAM - RUDDER FALSE		1
-11	151-24002-23	••HINGE - RUDDER TRIM TAB (MAKE FROM NAS40-10TT X 23-7/8)		1
	151-24125	••REINFORCEMENT - RUDDER TRIM TAB HINGE STA 17-40		1
	140-24089	••ANGLE - RUDDER RIB TO FALSE INTERMEDIATE BEAM ATTACHING STA 20 & 35		2
	140-24091	••ANGLE - RUDDER RIB TO FALSE BEAM REINF STA 27		1
-12	151-24002-13	••STRINGER - RUDDER STA 11 TO 55 PORT	001-300	1
-13	N151-24002-13	••STRINGER - RUDDER STA 11 TO 28 PORT	301-	1
-14	151-24002-33	••STRINGER - RUDDER STA 28 TO 55 PORT	301-	1
	151-24002-14	••STRINGER - RUDDER STA 11 TO 55 STARBOARD		1
-15	151-24041	••RIB - RUDDER STA 40 CANTED NOSE		1
	151-24002-31	••SPACER - RUDDER RIB TO BEAM STA 40		1
	140-24090-3	••ANGLE - RUDDER RIB ATTACHING STA 40		1
-16	151-24040	••RIB - RUDDER STA 40 CANTED INTERMEDIATE		1

FIGURE AND INDEX NUMBER	GROUP	EMPENNAGE	CODE	UNITS PER ASSY
	MAJOR ASSEMBLY	COMPLETE RUDDER		
	PART NUMBER	1234567 NOMENCLATURE		
30 -17	151-24048	..RIB - RUDDER STA 47 CANTED NOSE		1
-18	151-24047	..RIB - RUDDER STA 47 CANTED INTERMEDIATE		1
	151-24002-31	..SPACER - RUDDER RIB TO BEAM STA 47		1
	140-24090-5	••ANGLE - RUDDER RIB ATTACHING STA 47		1
	140-24090-11	••ANGLE - RUDDER RIB ATTACHING STA 56		1
-19	140-24043	••RIB - RUDDER STA 43 TRAILING EDGE		1
	140-24086-7	••GUSSET - RUDDER TRIM TAB CUT-OUT REINF STA 48		1
	140-24086-9	••GUSSET - RUDDER TRIM TAB CUT-OUT REINF STA 48		1
-20	140-24302-7	••BEAM - RUDDER FALSE		1
-21	151-24057	••RIB - RUDDER STA 56 CANTED NOSE		1
-22	151-24056	••RIB - RUDDER STA 56 CANTED INTERMEDIATE		1
	140-24090-7	••ANGLE - RUDDER RIB ATTACHING STA 56		1
	140-24082	••GUSSET - RUDDER & ELEVR STGR ATT STA 56		2
	140-24090-11	••ANGLE - RUDDER RIB ATTACHING STA 56		1
-23	151-24058	••RIB - RUDDER STA 56 CANTED TRAILING EDGE		1
-24	151-24066	••RIB - RUDDER STA 65 NOSE		1
	140-24090-9	••ANGLE - RUDDER RIB ATTACHING STA 65		1
-25	151-24065	••RIB - RUDDER STA 65 INTERMEDIATE		1
-26	151-24075	••RIB - RUDDER STA 75 CANTED		1
-27	151-24120-3	••STRIP - RUDDER TRAILING EDGE		1
-28	140-24080-1	••DOUBLER - RUDDER TIP REINFORCING LH		1
	140-24080-2	••DOUBLER - RUDDER TIP REINFORCING RH		1
-29	151-24002-950	••DOUBLER - RUDDER SKIN REINFORCING STA 72	001-100	2
-30	151-24002-29	••INTERCOSTAL - RUDDER SKIN REINF STA 70 LH	101-	1
	151-24002-30	••INTERCOSTAL - RUDDER SKIN REINF STA 70 RH	101-	1
-31	140-24081-3	••DOUBLER - RUDDER TAB REINFORCING PUSH-ROD CUT-OUT STA 28 LH		1
	140-24081-2	••DOUBLER - RUDDER TAB REINFORCING PUSH-ROD CUT-OUT STA 28 RH		1
	151-24402	••TORQUE TUBE ASSY - RUDDER		1
-32	151-24402-3	•••TORQUE TUBE - RUDDER		1
-33	151-24402-5	•••TUBE - RUDDER TORQUE PHENOLIC		1
-34	161-24404	•••FITTING - RUDDER TORQUE TUBE COUPLING		1
-35	151-24123	•••RIB - RUDDER TORQUE TUBE LOWER		1
-36	151-24122	•••RIB - RUDDER TORQUE TUBE UPPER		1
	151-24121	•••COLLAR - RUDDER TORQUE TUBE		1
	AN931-4-7	•••GROMMET -		1
-37	134-22405	••FITTING - ELEVATOR & RUDDER INTER HINGE		1
	AN3-6A	••BOLT - MPI		4
	AN960D10	••WASHER -		2
-38	73-22015	••FITTING - ELEVATOR & RUD OUTBD UP. HINGE		1
	AN3-6A	••BOLT - MPI		2
	AN960D10	••WASHER -		2
	140-24440-801	••WEIGHT ASSY - RUDDER BALANCE		1
-39	140-24440-803	•••WEIGHT - LEAD CAST RUDDER BALANCE		1
	140-24440-805	•••BOLT - RUDDER BALANCE (AS PER EO 05-5E-6A/264)		2
	165-16031	•••WASHER - RUDDER BALANCE WEIGHT (LEAD) (AS PER EO 05-5E-6A/264)	001-729	5
	140-24440-29	•••WASHER - RUDDER BALANCE WEIGHT (LEAD)	730-	5
	AN960-416	•••WASHER -		4
	AN365-428	•••NUT -		2
-40	AN3-7A	••BOLT - MPI		1
	AN3-6A	••BOLT - MPI		2
	AN960D10	••WASHER -	001-719	2
	2W18-10	••WASHER - FLAT (NAA)	720-	2

FIGURE AND INDEX NUMBER	GROUP EMPENNAGE MAJOR ASSEMBLY COMPLETE RUDDER PART NUMBER	1234567 NOMENCLATURE	CODE	UNITS PER ASSY
30 -41	151-24002-25	••DOUBLER ASSY - RUDDER INTERHINGE REINF		1
-42	140-24083	••DOUBLER - RUDDER TORQUE TUBE REINFORCING		1
	151-24002-17	••DOUBLER - RUDDER UPPER LE SKIN REINF		1
-43	151-24002-7	••SKIN - RUDDER LOWER LEADING EDGE		1
-44	151-24002-5	••SKIN - RUDDER UPPER LEADING EDGE		1
-45	151-24002-3	••SKIN - RUDDER MAIN LH		1
	151-24002-4	••SKIN - RUDDER MAIN RH		1
-46	NAS200-1032-10	••SCREW -	001-719	8
	AN507-1032R10	••SCREW -	720-	8
	2W18-10M	••WASHER - FLAT (NAA)	720-	4
	AN365-1032	••NUT -	720-	4
-47	140-24513-1	•BRACKET - RUDDER TRIM TAB ACTUATOR SUP• LH		1
	140-24513-2	•BRACKET - RUDDER TRIM TAB ACTUATOR SUP• RH		1
	AN3-5A	•BOLT - MPI		4
	AN960D10	•WASHER -		4
-48	140-24110	•PADDLE ASSY - RUDDER STATIC BALANCE		1
	140-24110-3	••FORMER - RUDDER STATIC BALANCE		1
	140-24110-5	••WEIGHT - LEAD ALLOY RUDDER STATIC BALANCE NAVY-L-16 LEAD		1
	NAS221-8	•SCREW - MPI		14
	140-24100	•DOOR ASSY - RUDDER TRIM TAB ACTUATOR ACC		1
-49	140-24100-3	••DOOR - RUDDER TRIM TAB ACTUATOR ACCESS		1
-50	140-24100-9	••DOOR ASSY - RUDDER TRIM TAB ACTUATOR ACCESS WEIGHT		1
	140-24100-5	•••HOUSING - RUDDER TRIM TAB ACTUATOR ACCESS WEIGHT		1
	140-24100-7	•••WEIGHT - LEAD CAST RUDDER TRIM TAB ACTE ACCESS DOOR NAVY-L-16 LEAD		1
	AN507-1032R8	•SCREW -		21
-51	172-24517	•BRACKET ASSY - RUDDER TRIM TAB BELL-CRANK SUPPORT LH		1
	172-24517-3	••BRACKET - RUDDER TRIM TAB BELCRK SUP• LH (MAKE FROM S-1170-0022 (CAN))		1
	AT6P	••NEEDLE-BEARING - AIRCRAFT (TOR)		1
-52	172-24518	•BRACKET ASSY - RUDDER TRIM TAB BELL-CRANK SUPPORT RH		1
	172-24518-3	••BRACKET - RUDDER TRIM TAB BELCRK SUP• RH (MAKE FROM S-1170-0022 (CAN))		1
	AT6P	••NEEDLE-BEARING - AIRCRAFT (TOR)		1
-53	6043-3-4-4	•JUMPER - (JNI) (BONDING)		1
	AN3-6A	•BOLT - MPI		4
	AN960-10L	•WASHER -		4
-54	172-24516	•FITTING ASSY - RUDDER TRIM TAB BELL-CRANK		1
	140-24514	•PUSH-ROD ASSY - RUDDER TRIM TAB		1
-55	140-24514-3	••TUBE - ROD		1
-56	RE3H5E4630	••ROD-END - (RBC) (AIRCRAFT HOLLOW SHANK)		1
-57	1R4-8	••ROD-END - THREADED (NAA)		1
	AN316-4R	••CHECK-NUT -		1
-58	REB3N-4630	••ROD-END - DOUBLE-ROW SELF-ALIGNING BEARING (FBC)		1
-59	AN173-12	•BOLT - MPI		1
	AN960-10	•WASHER -		1
	AN320-3	•NUT -		1
	AN380-2-2	•COTTER-PIN -		1
-60	AN173-10	•BOLT - MPI		1
	AN960D10L	•WASHER -		1
	AN310-3	•NUT -		1
	AN380-2-2	•COTTER-PIN -		1
-61	140-24504	•HORN - RUDDER TRIM TAB		1
-62	140-24515	•SHIM - RUDDER TRIM TAB HORN		1

FIGURE AND INDEX NUMBER	GROUP EMPENNAGE MAJOR ASSEMBLY COMPLETE RUDDER PART NUMBER	1234567 NOMENCLATURE	CODE	UNITS PER ASSY
30 -	NAS221-15	•SCREW - MPI		2
-63	AN749-2-3	•JUMPER -		1
	AN365-1032	•NUT -		2
-64	AN515-6-8	•SCREW -		1
	AN365-632	•NUT -		1
	140-24501	•TAB ASSY - RUDDER TRIM		1
-65	151-24506	••FITTING - RUDDER TRIM TAB LOWER FORMER		1
-66	151-24507	••FITTING - RUDDER TRIM TAB HORN FORMER		1
	151-24508	••FITTING - RUDDER TRIM TAB UP• INTER FORM•		1
	151-24509	••FITTING - RUDDER TRIM TAB UPPER FORMER		1
-67	140-24501-7	••HINGE - RUDDER TRIM TAB LEADING EDGE (MAKE FROM NAS40-6LL X 23-7/8)		1
	140-24501-9	••REINFORCEMENT - RUDDER TRIM TAB HINGE		1
-68	140-24501-17	••TRAILING EDGE - RUDDER TRIM TAB (MAKE FROM 5E28 X 29-7/16) (NAA)		1
	140-24501-12	••SUPPORT - RUDDER SKIN STA 17		1
	140-24501-14	••SUPPORT - RUDDER SKIN STA 21		1
	140-24501-16	••SUPPORT - RUDDER SKIN STA 25		1
	140-24501-15	••SUPPORT - RUDDER SKIN STA 29		1
	140-24501-13	••SUPPORT - RUDDER SKIN STA 33 & 37		2
	140-24501-11	••SUPPORT - RUDDER SKIN STA 42		1
-69	140-24501-5	••DOUBLER - RUDDER TRIM TAB HORN LH		1
	140-24501-6	••DOUBLER - RUDDER TRIM TAB HORN RH		1
-70	140-24501-3	••SKIN - RUDDER TRIM TAB LH		1
	140-24501-4	••SKIN - RUDDER TRIM TAB RH		1
-71	151-24001-3	•HINGE-PIN - TRIM TAB		1
	AN380-1-1	•COTTER-PIN -		2
	AN7510-1	•PLATE -		1
-72	151-24311	•TIP ASSY - RUDDER (PLASTIC)		1
-73	AN24-30	BOLT - MPI (SEE FIG• 26)		REF
-74	AN24-32	BOLT - MPI (SEE FIG• 26)		REF
-75	AN4-6	BOLT - (SEE SECTION 10)		REF

-000-

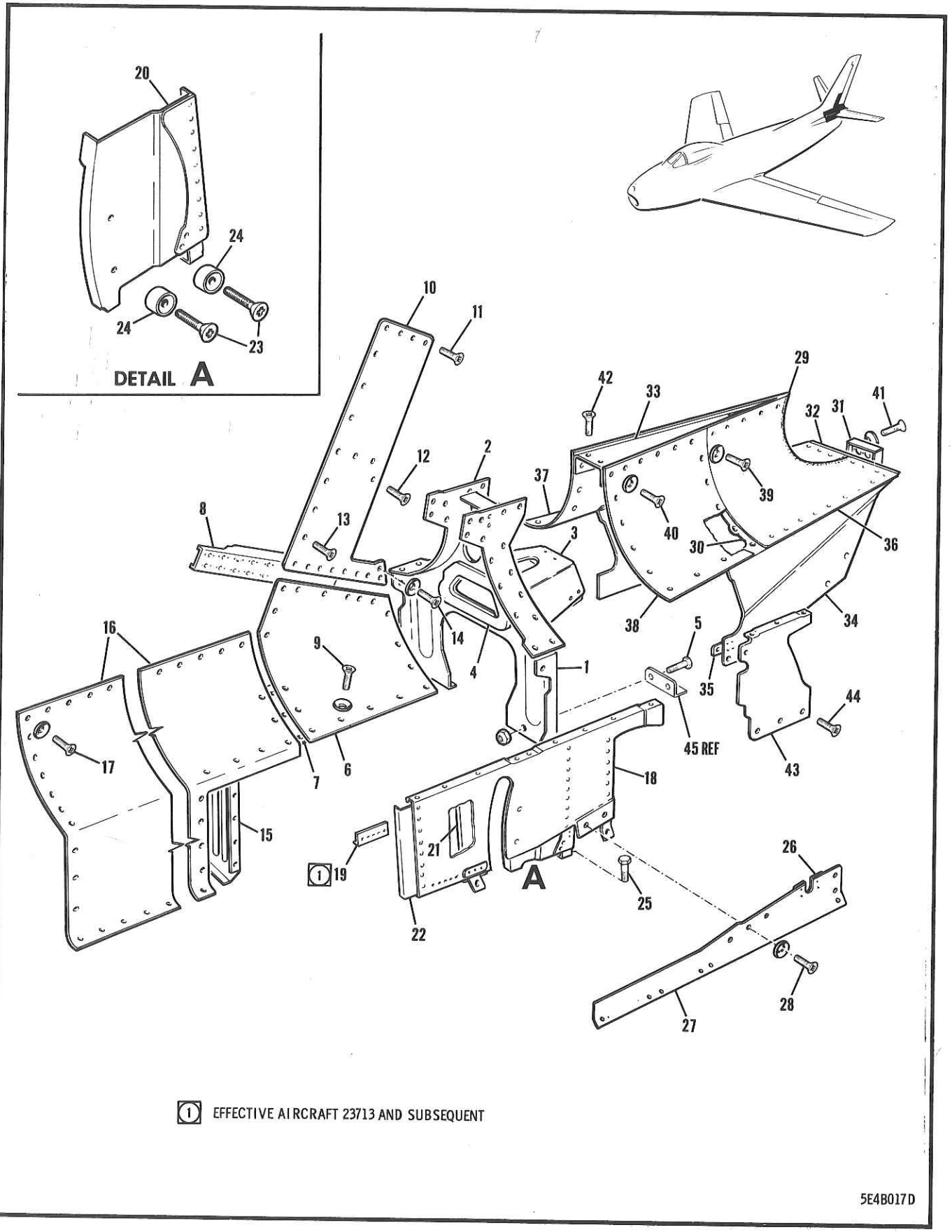

FIGURE 31 EMPENNAGE FILLET

FIGURE AND INDEX NUMBER	GROUP / MAJOR ASSEMBLY / PART NUMBER	EMPENNAGE / EMPENNAGE FILLET / 1234567 NOMENCLATURE	CODE	UNITS PER ASSY
31 -	170-25001	FILLET INSTL - EMPENNAGE (SEE FIG. 26)	001-210	NP
	170-25001-800	FILLET INSTL - EMPENNAGE	211-	NP
- 1	170-25004-101	.FRAME ASSY - EMPENNAGE FUS STA 101 FAIRING (AS PER EO 05-5E-6A/11)		1
- 2	170-25004-15	..WEB - EMPENNAGE FUS STA 401 FAIRING		1
	170-25004-9	..DOUBLER - EMPENNAGE FUS STA 401 LH		1
	170-25004-10	..DOUBLER - EMPENNAGE FUS STA 401 RH		1
	170-25004-12	..ANGLE - EMPENNAGE FRAME FUS STA 401 (AS PER EO 05-5E-6A/11)		1
	170-25004-5	..ANGLE - EMPENNAGE FRAME FUS STA 401		1
	170-25004-13	..ANGLE - EMPENNAGE FRAME FUS STA 401		2
- 3	170-58793	..SUPPORT - HYDRAULIC HORIZONTAL STABILIZER ACTUATING CYLINDER FLEXIBLE LINE (AS PER EO 05-5E-6A/11)		1
	170-25004-11	..CLIP - EMPENNAGE FAIRING FRAME		1
- 4	170-58794	..GUIDE-PLATE - HOR/STAB HYD CYLINDER HOSE		1
- 5	AN3-6A	.BOLT -		1
	AN3-3A	.BOLT - (AS PER EO 05-5E-6A/268)		1
	AN3-5A	.BOLT - (AS PER EO 05-5E-6A/268)		2
	S-1246AL-13-24-63	.WASHER - (CAN)		6
	AN365-1032	.NUT -		4
	170-25022-51	.FAIRING ASSY - FUS TO HOR/STAB STUB LH		1
- 6	170-25022-3	..PANEL - FUSELAGE TO HOR/STAB FAIRING (LH)		1
- 7	170-25022-5	..DOUBLER - FUSELAGE TO HOR/STAB FAIR. (LH)		1
	170-25022-2	.FAIRING ASSY - FUSELAGE TO HORIZONTAL STABILIZER STUB RH		1
- 8	170-25009-51	.CHANNEL ASSY - FAIRING SUPPORT LH		1
	170-25009-52	.CHANNEL ASSY - FAIRING SUPPORT RH		1
- 9	AN509-10R9	.SCREW -		40
	A3235-020-SS	.WASHER - FLAT-HEAD SCREW (TIN)		40
-10	170-23085-1	.DOOR ASSY - VERTICAL STABILIZER ACTUATOR ACCESS LH		1
	170-23085-52	.DOOR ASSY - VERTICAL STAB. ACTUATOR ACC RH	001-260	1
	170-23085-800	.DOOR ASSY - VERTICAL STAB. ACTUATOR ACC RH	261-	1
	170-23085-3	..SKIN - VERTICAL STAB. ACTUATOR ACCESS LH		1
	170-23085-12	..SKIN - VERTICAL STAB. ACTUATOR ACCESS RH	001-260	1
	170-23085-952	..SKIN - VERTICAL STAB. ACTUATOR ACCESS RH	261-	1
-11	AN509-10R9	.SCREW -		36
-12	AN509-10R10	.SCREW -		2
-13	AN520-10R10	.SCREW -		2
-14	AN509-10R9	.SCREW -		8
	A3235-020-SS	.WASHER - FLAT-HEAD SCREW (TIN)		8
-15	170-25012-1	.FORMER ASSY - EMPENNAGE FUSELAGE STA 362 FAIRING LH		1
	170-25012-2	.FORMER ASSY - EMPENNAGE FUSELAGE STA 362 FAIRING RH		1
	170-25011	.FORMER ASSY - EMPENNAGE FUSELAGE STA 374 FAIRING LH		1
	170-25010	.FORMER ASSY - EMPENNAGE FUSELAGE STA 374 FAIRING RH		1
	AN509-10R9	.SCREW -		14
	A3235-020-SS	.WASHER - FLAT-HEAD SCREW (TIN)		14
	AN3-4A	.BOLT -		8
	AN509-10R9	.SCREW -		14
	A3235-020-SS	.WASHER - FLAT-HEAD SCREW (TIN)		14
	AN3-4A	.BOLT -		2
	AN3-3A	.BOLT -		4
	AN3-5A	.BOLT -		2
	AN960D10L	.WASHER -		4
	AN365-1032	.NUT -		2
-16	170-25021-9	.FAIRING ASSY - VERT/STAB FWD SIDE LH		1
	170-25021-52	.FAIRING ASSY - VERT/STAB FWD SIDE RH		1

FIGURE AND INDEX NUMBER	GROUP EMPENNAGE MAJOR ASSEMBLY EMPENNAGE FILLET PART NUMBER	1234567 NOMENCLATURE	CODE	UNITS PER ASSY
31 -	170-25021-8	••SKIN - VERTICAL STABILIZER FWD FAIR. (RH)		1
	170-25021-6	••DOUBLER - VERTICAL STAB. FWD FAIRING (RH)		1
	EO 271651-1	••PLATE - VERTICAL STAB. FORWARD FAIR. (RH)		1
-17	AN509-10R9	•SCREW -		76
	A3235-020-SS	•WASHER - FLAT-HEAD SCREW (TIN)		76
	170-25042-101	•PANEL ASSY - EMPENNAGE INTER SIDE LH		1
	170-25042-102	•PANEL ASSY - EMPENNAGE INTER SIDE RH		1
-18	170-25042-3	••PANEL - EMPENNAGE INTERMEDIATE SIDE LH		1
	170-25042-4	••PANEL - EMPENNAGE INTERMEDIATE SIDE RH		1
-19	170-25042-801	••ANGLE - EMPENNAGE INTERMEDIATE SIDE (LH)	713-	1
-20	170-25034-51	••FRAME ASSY - HOR/STAB FORWARD BEAM COVER REAR GUIDE LH		1
	170-25034-7	•••FRAME - HOR/STAB FORWARD BEAM COVER REAR GUIDE LH		1
	170-25034-5	•••DOUBLER - HOR/STAB FORWARD BEAM COVER REAR GUIDE LH		1
	170-25034-52	••FRAME ASSY - HOR/STAB FORWARD BEAM COVER REAR GUIDE RH		1
	170-25034-8	•••FRAME - HOR/STAB FORWARD BEAM COVER REAR GUIDE RH		1
	170-25034-5	•••DOUBLER - HOR/STAB FORWARD BEAM COVER REAR GUIDE RH		1
-21	170-25035-51	••FRAME ASSY - HOR/STAB FORWARD BEAM COVER FORWARD GUIDE LH		1
	170-25035-7	•••FRAME - HOR/STAB FORWARD BEAM COVER FORWARD GUIDE LH		1
	170-25035-9	•••DOUBLER - HOR/STAB FORWARD BEAM COVER FORWARD GUIDE LH		1
	170-25035-52	••FRAME ASSY - HOR/STAB FORWARD BEAM COVER FORWARD GUIDE RH		1
	170-25035-8	•••FRAME - HOR/STAB FORWARD BEAM COVER FORWARD GUIDE RH		1
	170-25035-10	•••DOUBLER - HOR/STAB FORWARD BEAM COVER FORWARD GUIDE RH		1
-22	170-25043	••CHANNEL ASSY - EMPENNAGE INTERMEDIATE SIDE PANEL SUPPORT		1
	170-25044-1	••ANGLE - EMPENNAGE INTER SIDE FAIR. PANEL FUS STA 397 LH		1
	170-25044-2	••ANGLE - EMPENNAGE INTER SIDE FAIR. PANEL FUS STA 397 RH		1
	170-25036-1	••CLIP - FRAME TO FAIRING ATTACHING LH		1
	170-25036-2	••CLIP - FRAME TO FAIRING ATTACHING RH		1
-23	AN509-8-11	••SCREW -		2
-24	170-25039	••SPACER - HOR/STAB FWD BEAM COVER-PLATE		2
-25	AN3-4A	•BOLT -		4
	170-25041-951	•DOOR ASSY - HOR/STAB ATT LOWER ACCESS LH (AS PER EO 05-5E-6A/104)		1
	170-25041-952	•DOOR ASSY - HOR/STAB ATT LOWER ACCESS RH (AS PER EO 05-5E-6A/104)		1
-26	170-25041-955	••DOOR - STABILIZER LH		1
	170-25041-956	••DOOR - STABILIZER RH		1
-27	170-25041-953	••DOUBLER - STABILIZER		1
-28	AN509-10R9	•SCREW -		26
	A3235-020-SS	•WASHER - FLAT-HEAD SCREW (TIN)		26
-29	170-25026	•CONE ASSY - RUDDER & ELEVATOR FAIRING	001-210	1
	170-25026-800	•CONE ASSY - RUDDER & ELEVATOR FAIRING	211-	1
	170-25005	••FRAME ASSY - EMP TO FUS STA 412 FAIRING	001-746	1
	170-25005-800	••FRAME ASSY - EMPENNAGE TO FUSELAGE STA 412 FAIRING	747-	1
-30	170-25005-3	•••FRAME - EMPENNAGE TO FUS STA 412 FAIR.	001-746	1

FIGURE AND INDEX NUMBER	GROUP EMPENNAGE MAJOR ASSEMBLY EMPENNAGE FILLET PART NUMBER	1234567 NOMENCLATURE	CODE	UNITS PER ASSY
31 -	170-25005-803	•••FRAME - EMPENNAGE TO FUS STA 412 FAIRING	747-	1
	170-25005-801	•••ANGLE - EMPENNAGE TO FUSELAGE STA 412 FAIRING LH	747-	1
	170-25005-802	•••ANGLE - EMPENNAGE TO FUSELAGE STA 412 FAIRING RH	747-	1
	170-25005-7	•••ANGLE - EMPENNAGE TO FUS STA 412 FAIRING		2
	170-25040	••BULKHEAD ASSY - FUS STA 430 TAIL-LIGHT	001-210	1
	170-25040-800	••BULKHEAD ASSY - FUS STA 430 TAIL-LIGHT	211-	1
-31	170-25040-3	•••BULKHEAD - FUSELAGE STA 430 TAIL-LIGHT		1
	170-25040-951	•••COVER - FUSELAGE STA 430 TAIL-LIGHT	211-	1
	AN515-416R7	•••SCREW -	211-	2
	AN960-4C	•••WASHER -	211-	2
	151-25019	••SPACER - TAIL-CONE		1
-32	170-25026-11	••FILLER - RUDDER & ELEVATOR FAIRING (MAKE FROM 12E2 X 10 (NAA))		1
-33	170-25008	••PANEL ASSY - RUDDER STUB		1
-34	170-25006-1	••PANEL ASSY - ELEVATOR STUB LH		1
	170-25006-2	••PANEL ASSY - ELEVATOR STUB RH		1
-35	170-25006-5	•••DOUBLER - ELEVATOR STUB PANEL		1
	170-25026-9	••SKIN ASSY - RUDDER & ELEVATOR FAIR• CONE		1
-36	170-25026-3	•••SKIN - RUDDER & ELEVATOR FAIR• CONE TAIL		1
-37	170-25026-7	•••SKIN - RUDDER & ELEVATOR FAIRING CONE RH		1
-38	170-25026-5	•••SKIN - RUDDER & ELEVATOR FAIRING CONE LH		1
-39	AN509-1032R7	••SCREW -		7
	A3235-020-SS	••WASHER - FLAT-HEAD SCREW (TIN)		7
-40	AN509-10R9	•SCREW -		26
	A3235-020-SS	•WASHER - FLAT-HEAD SCREW (TIN)		26
-41	AN509-10R9	•SCREW -		3
	A3235-020-SS	•WASHER - FLAT-HEAD SCREW (TIN)		3
-42	AN520-1032R8	•SCREW -		2
-43	170-25027-1	•PANEL ASSY - FUSELAGE STA 401 LH		1
	170-25027-2	•PANEL ASSY - FUSELAGE STA 401 RH		1
-44	AN509-10R9	•SCREW -		10
	A3235-020-SS	•WASHER - FLAT-HEAD SCREW (TIN)		10
-45	13A-34035-53	CLIP - EMP FAIRING FRAME (SEE SECTION 3)		REF

-000-

SECTION 3

FUSELAGE

TABLE OF CONTENTS

FIGURE	TITLE	PAGE
32	COVERED FUSELAGE	198
33	GUN-BAY ACCESS DOOR	204
34	EQUIPMENT UPPER ACCESS DOOR	208
35	LOWER RADIO COMPARTMENT DOOR	212
36	COVERED FORWARD FUSELAGE STA 0-236	216
37	COCKPIT DECK & WINDSHIELD STRUCTURE	222
38	COCKPIT DECK & CANOPY MECHANISM	228
38A	COCKPIT WINDSHIELD STRUCTURE & COVER	234
39	NOSE FUSELAGE STA 0-63	238
39A	COCKPIT PRESSURE WEB	244
40	NOSE FUSELAGE STA 63-126	248
41	FUSELAGE STA 53 UPPER FRAME	254
42	FUSELAGE STA 0-126 LOWER FRAME	258
42A	FUSELAGE STA 53 LOWER FRAME	262
43	NOSE WHEEL & TRUNNION BEAMS	266
44	FUSELAGE STA 84-109 COMPLETE BOTTOM FRAME	270
45	FUSELAGE STA 0-131 AIR INTAKE DUCT	274
46	FUSELAGE STA 15-78 LOWER DUCT	278
47	FUSELAGE STA 15-78 UPPER DUCT	282
48	FUSELAGE STA 78-131 UPPER DUCT	286
49	FUSELAGE STA 78-128 LOWER DUCT	290
50	FUSELAGE STA 15 AIR DUCT NOSE FRAME & BALLASTS	294
51	FUSELAGE FRAME STA 84 TO CANTED STA 87	298
52	FUSELAGE STA 84-126 LOWER DOORS	304
53	COCKPIT PRESSURE WEB	308
54	AMMUNITION BOX ACCESS FAIRING DOOR	312
55	FUSELAGE STA 118 CANTED BULKHEAD	316
56	FUSELAGE STA 131-236 INTERMEDIATE SECTION	320
57	ENGINE MOUNT & FUSELAGE TO WING FILLET PLATE & ANGLE	326
58	FUSELAGE STA 131-183 AIR DUCT	330
59	FUSELAGE STA 131-183 UPPER AIR DUCT	332
60	FUSELAGE STA 178-236 UPPER FRAME	336
61	FUSELAGE LOWER FRAME & SHROUD	340
62	FUSELAGE STA 131-236 FRAME PORT SIDE	344
63	FUSELAGE STA 131-236 FRAME STARBOARD SIDE	350
64	ENGINE TO GROUND HYDRAULIC DISCONNECT	356
65	FUSELAGE STA 178-205 WHEEL WELL	358
65A	FUSELAGE STA 178 WHEEL WELL BULKHEAD	362
66	FUSELAGE STA 205 WHEEL WELL FRAME	364
67	COCKPIT ENCLOSURE WINDSHIELD	368
68	CANOPY EMERGENCY RELEASE (SABRE 5) (EFFECTIVE AIRCRAFT 23001 TO 23370 INCL)	372
69	CANOPY EMERGENCY RELEASE (SABRE 6) (EFFECTIVE AIRCRAFT 23371 & SUBS)	376
70	COCKPIT CANOPY & EMERGENCY RELEASE MECHANISM	380
71	COCKPIT ENCLOSURE SLIDING CANOPY	386
72	SABRE 5, 5A & 6 REAR FUSELAGE SPARES	392
73	COMPLETE REAR SECTION FUSELAGE	394
73A	SURFACE CONTROL PULLEY BRACKET	398
74	FUSELAGE STA 236-327 SIDE PANELS	402
75	REAR FUSELAGE STA 236-298 LOWER FRAME	410
76	REAR FUSELAGE UPPER FRAME	412
77	REAR FUSELAGE STA 327-430 FRAME	414
78	FUSELAGE TAIL-PIPE FAIRING	420
79	FUSELAGE SPEEDBRAKE WELL	422
80	FUSELAGE SPEEDBRAKES	426

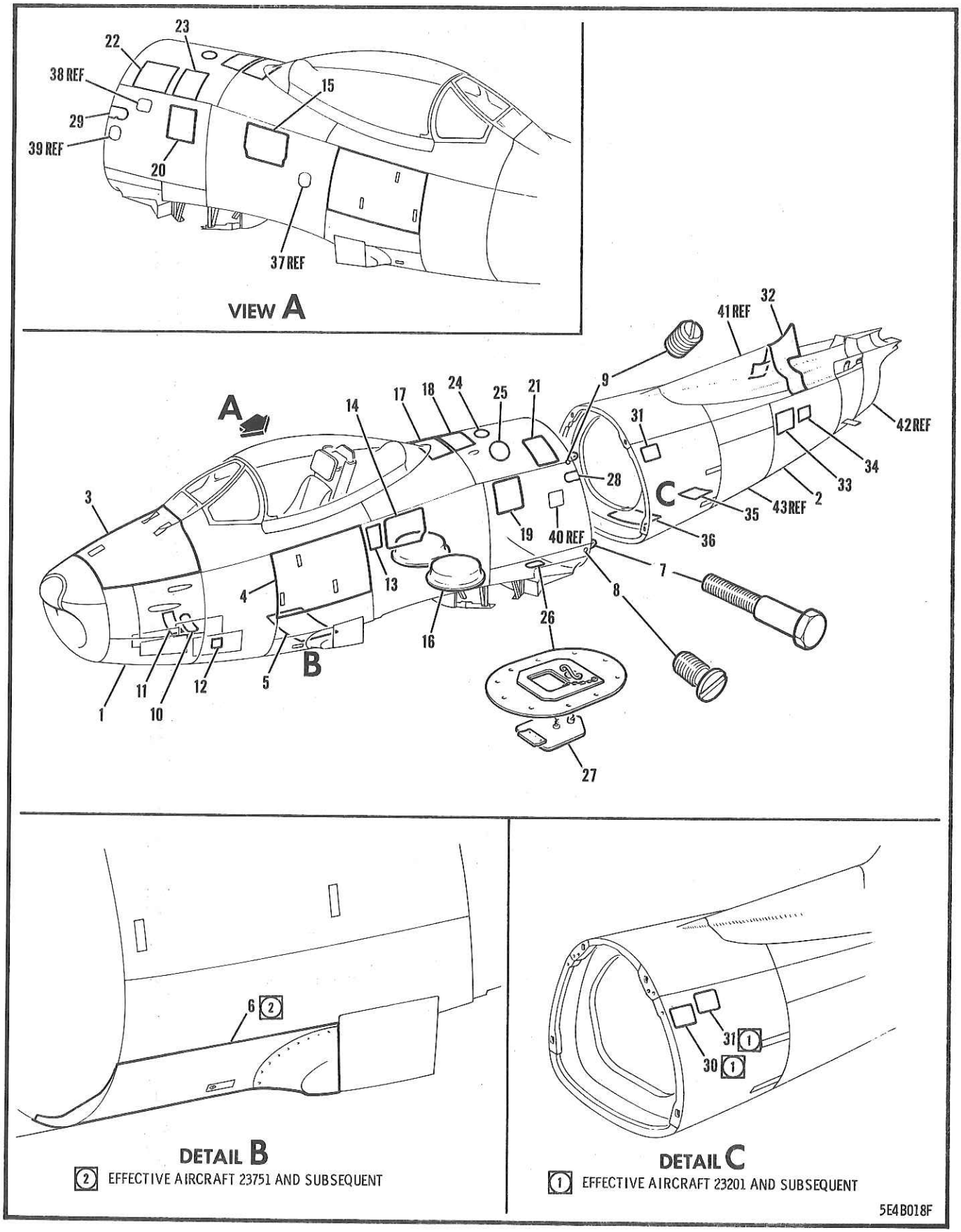

FIGURE 32 COVERED FUSELAGE

FIGURE AND INDEX NUMBER	GROUP / MAJOR ASSEMBLY / PART NUMBER	FUSELAGE / COVERED FUSELAGE / 1234567 NOMENCLATURE	CODE	UNITS PER ASSY
32 -	13A-30001	COVER INSTL - FUSELAGE COMPL (SEE FIG. 1)	001-030	NP
	13A-30001-803	COVER INSTL - FUSELAGE COMPLETE	031-100	NP
	13A-30001-20	COVER INSTL - FUSELAGE COMPLETE	101-200	NP
	13A-30001-801	COVER INSTL - FUSELAGE COMPLETE	201-210	NP
	13A-30001-802	COVER INSTL - FUSELAGE COMPLETE	211-300	NP
	13A-30001-804	COVER INSTL - FUSELAGE COMPLETE	301-370	NP
	13A-30001-805	COVER INSTL - FUSELAGE COMPLETE	371-736	NP
	13A-30001-806	COVER INSTL - FUSELAGE COMPLETE	737-	NP
- 1	13A-30010	.FUSELAGE ASSY - FORWARD SECTION (SEE FIG. 36)		REF
- 2	13A-30011	.FUSELAGE ASSY - REAR SECTION COMPLETE (SEE FIG. 73)		REF
- 3	172-31004-810	.DOOR ASSY - FUS STA 15-54 UPPER EQUIP. ACC (SEE FIG. 34)		REF
- 4	151-31006-801	.DOOR ASSY - GUN-BAY ACCESS PORT SIDE (SEE FIG. 33)		REF
	151-31006-802	.DOOR ASSY - GUN-BAY ACCESS STARBOARD SIDE (SEE FIG. 33)		REF
- 5	151-31020	.DOOR INSTL - LOWER RADIO COMPT ACCESS FUS STA 109-126 (SEE FIG. 35)		REF
- 6	191-31027-801	.DOOR ASSY - AMMUNITION BOX ACCESS FAIRING FUS STA 84-109 PORT SIDE(SEE FIG.54)		REF
	191-31027-802	.DOOR ASSY - AMMUNITION BOX ACCESS FAIRING FUS STA 84-109 STBD SIDE(SEE FIG.54)		REF
	NAS221-10	.SCREW - (AS PER EO 05-5E-6A/179)	737-	18
	AN960PD10	.WASHER - (AS PER EO 05-5E-6A/179)	737-	36
	AN365-1032	.NUT - (AMO BOX ATT)	737-	9
- 7	140-31024	.BOLT - FUSELAGE ATTACHING STA 236 MPI		4
- 8	151-31787	.PLUG - FUSELAGE STA 241 LWR FWD LONGN FTG		2
- 9	151-31788-801	.PLUG - FUSELAGE CANTED STA 236 LONGN FTG		2
	AN509-416R11	.SCREW -		2
-10	170-31026	.DOOR ASSY - FUSELAGE STA 67 GUN CHARGER AIR BOTTLE ACCESS		1
	9C1-3-7	..SAFETY-CHAIN - (NAA)		1
	99947-C.130	..RECEPTACLE - AIRLOC FASTENER FLOATING STUD (MKM)		4
	99836	..CROSS-PIN - AIRLOC FASTENER (MKM)		4
	98265-1-120	..STUD - FLUSH HEAD AIRLOC FASTENER (MKM)		4
	AN960D4	..WASHER -		3
	AN509-10R8	.SCREW - (AIR BOTTLE ACCESS DOOR ATT)		16
-11	172-31006	.PANEL ASSY - FUS STA 58 GUN CHGR COMPR ACC		1
	172-31006-3	..PANEL ASSY - FUSELAGE STA 58 GUN CHARGER COMPRESSOR ACCESS		1
	99833-C.130	...RECEPTACLE - AIRLOC FASTENER STUD (MKM)		8
	9C1-2-7	...SAFETY-CHAIN - (NAA)		8
	172-31006-5	..DOOR ASSY - FUSELAGE STA 58 GUN CHARGER COMPR ACC PANEL		1
	99836	...CROSS-PIN - AIRLOC FASTENER (MKM)		8
	98265-1-110	...STUD - FLUSH HEAD AIRLOC FASTENER (MKM)		8
	AN509-10R9	.SCREW - (GUN CHGR COMPR ACC PANEL ATT)		30
-12	161-31051	.DOOR - FUS STA 68 WHEEL WELL BEAM TYPE C1 FLASHER ACCESS (PORT SIDE)		1
	NAS221-8	.SCREW - (TYPE C1 FLASHER ACCESS DOOR ATT)		20
-13	170-31060	.DOOR - FUS STA 126-134 ACTE ACCESS (PORT)		1
	AN509-10R11	.SCREW - (ACTUATOR ACCESS DOOR ATT)		21
	AN509-10R12	.SCREW - (ACTUATOR ACCESS DOOR ATT)		13

FIGURE AND INDEX NUMBER	GROUP FUSELAGE MAJOR ASSEMBLY COVERED FUSELAGE PART NUMBER	1234567 NOMENCLATURE	CODE	UNITS PER ASSY
32 -14	151-31009	•DOOR ASSY - FUS STA 133-155 ACCESS (PORT)		1
	151-31009-21	••DOOR ASSY - FUS STA 133-155 ACCESS (PORT)		1
	151-31009-3	•••SKIN - FUSELAGE STA 133-155 ACCESS DOOR OUTER (PORT SIDE)		1
	151-31009-5	•••SKIN - FUSELAGE STA 133-155 ACCESS DOOR INNER (PORT SIDE)		1
	151-31009-27	•••PLATE - FUS STA 133-155 ACC DOOR (PORT)	101-	1
	AN530-4R6	•••SCREW - (PLATE TO INNER SKIN ATT)	101-	6
	FA5-45	•••FASTENER - FLUSH HEAD (DFC)		4
	98265-3-280	••STUD - FLUSH HEAD AIRLOC FASTENER (MKM)		1
	98265-3-300	••STUD - FLUSH HEAD AIRLOC FASTENER (MKM)		1
	99836	••CROSS-PIN - AIRLOC FASTENER (MKM)		2
-15	151-31017	•DOOR ASSY - FUS STA 145-167 ACCESS (STBD)		1
	151-31017-3	••SKIN - FUS STA 145-167 ACCESS DOOR (STBD)		1
	151-31017-5	••DOUBLER - FUS STA 145-167 ACC DOOR (STBD)		1
	151-31017-19	••PLATE - FUS STA 145-167 DOOR (STBD SIDE)		1
	AN530-4R6	••SCREW -		6
	FA5-50	••FASTENER - FLUSH HEAD (DFC)		4
	98265-3-300	••STUD - FLUSH HEAD AIRLOC FASTENER (MKM)		2
	99836	••CROSS-PIN - AIRLOC FASTENER (MKM)		2
-16	172-31273-21	•COVER ASSY - FUSELAGE STA 193 WHEEL LH		1
	172-31273-22	•COVER ASSY - FUSELAGE STA 193 WHEEL RH		1
	GA6-1/2-375	••GROMMET - FASTENER (DFC)		6
	A6-1/2-40	••FASTENER - OVAL HEAD (DFC)		6
-17	172-31053	•DOOR ASSY - FUS STA 167-178 UPPER ACCESS		1
	AN509-10R10	•SCREW - (FUS STA 167-178 UP• ACC DOOR ATT)		30
-18	172-31054	•DOOR ASSY - FUSELAGE STA 178-190 UPPER		1
	AN509-10R9	•SCREW - (FUS STA 178-190 UP• ACC DOOR ATT)		24
-19	151-31010-25	•DOOR ASSY - ENGINE ACC FUS STA 190-205 LH		1
	FA5-40	••FASTENER - FLUSH HEAD (DFC)		3
	99834-3-300	••STUD - FLUSH HEAD AIRLOC FASTENER (MKM)		2
	99834-3-340	••STUD - FLUSH HEAD AIRLOC FASTENER (MKM)		1
	99836	••CROSS-PIN - AIRLOC FASTENER (MKM)		3
-20	13A-32048	•DOOR ASSY - ENGINE ACC FUS STA 190-204 RH		1
	FA5-40	••FASTENER - FLUSH HEAD (DFC)		3
	98265-4-390	••STUD - FLUSH HEAD AIRLOC FASTENER (MKM) (STA 203)		1
	98265-4-340	••STUD - FLUSH HEAD AIRLOC FASTENER (MKM) (STA 192)		1
	99836	••CROSS-PIN - AIRLOC FASTENER (MKM)		2
-21	151-31025-1	•DOOR ASSY - FUS STA 215-226 UP• ACCESS LH		1
	FA5-35	••FASTENER - FLUSH HEAD (DFC)		2
	FA5-40	••FASTENER - FLUSH HEAD (DFC)		4
-22	13A-39109	•DOOR ASSY - HYDRAULIC PUMP ACCESS FUS STA 205-226 TOP (STARBOARD)		1
	FA5-40	••FASTENER - FLUSH HEAD (DFC)		14
	GF5-175	••GROMMET - FASTENER (DFC)		14
-23	13A-39108	•DOOR ASSY - HYDRAULIC PUMP ACCESS FUSELAGE STA 190-205 TOP (STARBOARD SIDE)		1
-24	13A-32093	•DOOR ASSY - UPPER ENGINE TRUN ACCESS TOP		1
	FA5-35	••FASTENER - FLUSH HEAD (DFC)		4
	S-1192-1-7	••CHAIN - BEAD (CAN)		1
	S-1191	••CLIP - BALL CHAIN ATTACHING (CAN)		1
-25	13A-32092	•DOOR ASSY - THROTTLE WARNING HORN U/SW ACC STA 196 TOP (PORT SIDE)		1

(CONTINUED)

FIGURE AND INDEX NUMBER	GROUP FUSELAGE MAJOR ASSEMBLY COVERED FUSELAGE PART NUMBER	1234567 NOMENCLATURE	CODE	UNITS PER ASSY
32 -	FA5-35	••FASTENER - FLUSH HEAD (DFC)		8
	S-1192-1-4	••CHAIN - BEAD (CAN)(AS PER EO 05-5E-6A/20)		1
	S-1191	••CLIP - BALL CHAIN ATTACHING (CAN)		1
	13A-64084-13	•DOOR ASSY - REAR FUS FUEL CELL BOOSTER PUMP ACCESS		1
-26	13A-64084-15	••DOOR ASSY - REAR FUS FUEL CELL BOOSTER PUMP ACCESS		1
	2C28	•••CLIP - BALL CHAIN ATTACHING (NAA)	001-300	1
	AN960-2L	•••WASHER -	301-	1
	S5-300	•••SPRING - FASTENER (DFC)		1
-27	13A-64084-17	••DOOR ASSY - REAR FUS FUEL CELL BOOSTER PUMP ACCESS		1
	2C28	•••CLIP - BALL CHAIN ATTACHING (NAA)	100-300	1
	AN960-2L	•••WASHER -	301-	1
	FA5-35	•••FASTENER - FLUSH HEAD (DFC)		1
	GF5-175	•••GROMMET - FASTENER (DFC)		1
	9C1-1-5	••CHAIN - BEAD (NAA)	001-300	1
	9C1-2-5	••SAFETY-CHAIN - (NAA)	301-	1
	AN509-8R6	•SCREW - (FUEL BOOSTER PUMP ACC DOOR ATT)		5
-28	13A-32167-1	•DOOR ASSY - FUSELAGE STA 232 ORENDA FTG ACCESS PORT SIDE		1
	AN509-10R10	•SCREW - (ORENDA FTG ACCESS DOOR ATT)		3
	AN509-10R8	•SCREW - (ORENDA FTG ACCESS DOOR ATT)		7
-29	13A-32167-2	•DOOR ASSY - FUSELAGE STA 232 ORENDA FTG ACCESS STBD SIDE		1
	AN509-10R11	•SCREW - (ORENDA FTG ACCESS DOOR ATT)		1
	AN509-10R13	•SCREW - (ORENDA FTG ACCESS DOOR ATT)		2
	AN509-10R8	•SCREW - (ORENDA FTG ACCESS DOOR ATT)		7
-30	13B-34101	•COVER ASSY - SPARK PLUG ACCESS FUS STA 240	201-	2
	13B-34101-3	••COVER - SPARK PLUG ACCESS FUS STA 240	201-	1
	FA5-35	••FASTENER - FLUSH HEAD (DFC)	201-	4
	GF5-175	••GROMMET - FASTENER (DFC)	201-	4
	2C1-1-7	••CHAIN - BEAD (NAA)	201-300	1
	2C1-2-7	••SAFETY-CHAIN - (NAA)	301-	1
	2C28	••CLIP - BALL CHAIN ATTACHING (NAA)	201-300	1
	AN960-2L	••WASHER -	301-	1
-31	151-31591	•COVER ASSY - SPARK PLUG ACCESS STA 249		2
	FA5-35	••FASTENER - FLUSH HEAD (DFC)		5
	GF5-175	••GROMMET - FASTENER (DFC)		5
	2C28	••CLIP - BALL CHAIN ATTACHING (NAA)	001-300	1
	AN960-2L	••WASHER -	301-	1
	9C1-1-7	••CHAIN - BEAD (NAA)	001-300	1
	9C1-2-7	••SAFETY-CHAIN - (NAA)	301-	1
-32	170-31380	•DOOR ASSY - DORSAL FIN ACCESS		1
	A3235-020-SS	•WASHER - FLAT-HEAD SCREW (TIN)		38
	AN509-10R9	•SCREW - (DORSAL FIN ACCESS DOOR ATT)		50
-33	170-31320-1	•DOOR - FUSELAGE STA 327-340 HYD ACCESS (PORT SIDE)		1
	170-31320-2	•DOOR - FUSELAGE STA 327-340 HYD ACCESS (STARBOARD SIDE)		1
	AN509-10R7	•SCREW - (HYD ACCESS DOOR ATT)		48
-34	13A-34117	•COVER ASSY - TURNBUCKLE ACCESS STA 340-352		2
	FA5-35	••FASTENER - FLUSH HEAD (DFC)		4
	S-1192-1-7	••CHAIN - BEAD (CAN)	001-300	1
	S-1192-2-7	••SAFETY-CHAIN - (CAN)	301-	1
	S-1191	••CLIP - BALL CHAIN ATTACHING (CAN)	001-300	1
	AN960-2L	••WASHER -	301-	1
-35	13A-34133	•DOOR ASSY - JET-PIPE LEVER ACC STA 308-315	001-200	1
	13A-34133-800	•DOOR ASSY - JET-PIPE LEVER ACC STA 308-315	201-	1
	FA5-35	••FASTENER - FLUSH HEAD (DFC)	001-200	6

FIGURE AND INDEX NUMBER	GROUP FUSELAGE MAJOR ASSEMBLY COVERED FUSELAGE PART NUMBER	1234567 NOMENCLATURE	CODE	UNITS PER ASSY
32 -	FA5-35	••FASTENER - FLUSH HEAD (DFC)	201-	8
	S-1192-1-7	••CHAIN - BEAD (CAN)	001-300	1
	S-1192-2-7	••SAFETY-CHAIN - (CAN)	301-	1
	S-1191	••CLIP - BALL CHAIN ATTACHING (CAN)	001-300	1
	AN960-2L	••WASHER -	301-	1
-36	13A-34136	•DOOR ASSY - FUSELAGE STA 263-275 BOTTOM		1
	FA5-40	••FASTENER - FLUSH HEAD (DFC)		4
	FA5-35	••FASTENER - FLUSH HEAD (DFC)		2
	S-1192-1-7	••CHAIN - BEAD (CAN)	001-300	1
	S-1192-2-7	••SAFETY-CHAIN - (CAN)	301-	1
	S-1191	••CLIP - BALL CHAIN ATTACHING (CAN)	001-300	1
	AN960-2L	••WASHER -	301-	1
-37	151-48061-11	DOOR ASSY - FORWARD FUS FUEL CELL FILLER (SEE SECTION 12)		REF
-38	13A-65002	DOOR ASSY - FUSELAGE STA 218 OIL TANK ACCESS STARBOARD (SEE FIG. 63)		REF
-39	13A-64016	DOOR ASSY - FUEL CELL FILLER (SEE SECT. 12)		REF
-40	172-54151-11	DOOR ASSY - ELECTRICAL EXTERNAL POWER RECEPTACLE PORT (SEE FIG. 62)		REF
-41	170-31300	FIN ASSY - FUSELAGE DORSAL (SEE FIG. 76)		REF
-42	13A-34035	FAIRING ASSY - FUS TAIL-PIPE (SEE FIG. 78)		REF
-43	151-39002-1	SPEEDBRAKE INSTL - FUSELAGE (PORT SIDE) (SEE FIG. 80)		REF
		-000-		

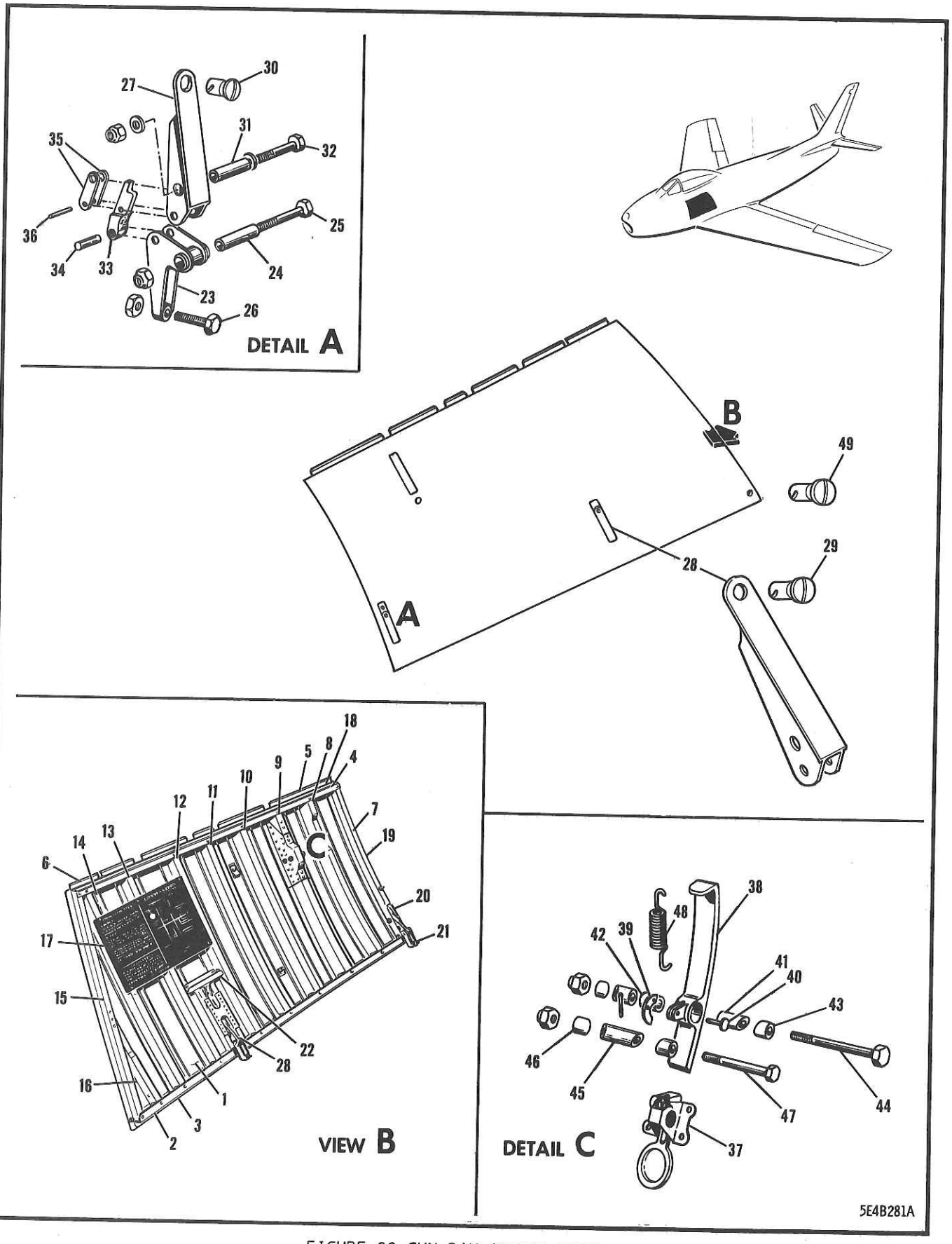

FIGURE 33 GUN-BAY ACCESS DOOR

FIGURE AND INDEX NUMBER	GROUP FUSELAGE MAJOR ASSEMBLY GUN-BAY ACCESS DOOR PART NUMBER	1234567 NOMENCLATURE	CODE	UNITS PER ASSY
33 -	151-31006-801	DOOR ASSY - GUN-BAY ACCESS (PORT SIDE) (SEE FIG. 32)	001-712	1
	151-31006-803	DOOR ASSY - GUN-BAY ACCESS (PORT SIDE)	713-	1
	151-31006-802	DOOR ASSY - GUN-BAY ACCESS (STARBOARD SIDE) (SEE FIG. 32)	001-712	1
	151-31006-804	DOOR ASSY - GUN-BAY ACCESS (STARBOARD SIDE)	713-	1
- 1	151-31006-3	.SKIN - GUN-BAY ACCESS DOOR OUTER PORT SIDE		1
	151-31006-4	.SKIN - GUN-BAY ACCESS DOOR OUTER STBD SIDE		1
- 2	151-31006-77	.ANGLE - GUN-BAY ACCESS DOOR LWR PORT SIDE		1
	151-31006-78	.ANGLE - GUN-BAY ACCESS DOOR LWR STBD SIDE		1
- 3	151-31006-49	.BEAM - GUN-BAY ACCESS DOOR LOWER PORT SIDE		1
	151-31006-50	.BEAM - GUN-BAY ACCESS DOOR LOWER STBD SIDE		1
- 4	151-31006-13	.CHANNEL - GUN-BAY ACC DOOR UPPER PORT SIDE		1
	151-31006-14	.CHANNEL - GUN-BAY ACC DOOR UPPER STBD SIDE		1
- 5	151-31006-15	.HINGE - GUN-BAY ACC DOOR UP. FWD PORT SIDE		1
	151-31006-16	.HINGE - GUN-BAY ACC DOOR UP. FWD STBD SIDE		1
- 6	151-31006-21	.HINGE - GUN-BAY ACCESS DOOR UP. REAR PORT		1
	151-31006-22	.HINGE - GUN-BAY ACCESS DOOR UP. REAR STBD		1
- 7	151-31006-9	.FRAME - GUN-BAY ACCESS DOOR PORT SIDE		1
	151-31006-10	.FRAME - GUN-BAY ACCESS DOOR STARBOARD SIDE		1
	151-31006-23	.CLIP - GUN-BAY DOOR FRAME LOWER ATT PORT		2
	151-31006-24	.CLIP - GUN-BAY DOOR FRAME LOWER ATT STBD		2
	151-31006-27	.CLIP - GUN-BAY DOOR FRAME UPPER ATT PORT		2
	151-31006-28	.CLIP - GUN-BAY DOOR FRAME UPPER ATT STBD		2
- 8	151-31006-29	.HAT - GUN-BAY ACCESS DOOR PORT SIDE		1
	151-31006-30	.HAT - GUN-BAY ACCESS DOOR STARBOARD SIDE		1
- 9	151-31006-31	.HAT - GUN-BAY ACCESS DOOR PORT SIDE		1
	151-31006-32	.HAT - GUN-BAY ACCESS DOOR STARBOARD SIDE		1
-10	151-31006-33	.HAT - GUN-BAY ACCESS DOOR PORT SIDE		1
	151-31006-34	.HAT - GUN-BAY ACCESS DOOR STARBOARD SIDE		1
-11	151-31006-35	.HAT - GUN-BAY ACCESS DOOR PORT SIDE		1
	151-31006-36	.HAT - GUN-BAY ACCESS DOOR STARBOARD SIDE		1
-12	151-31006-37	.HAT - GUN-BAY ACCESS DOOR PORT SIDE		1
	151-31006-38	.HAT - GUN-BAY ACCESS DOOR STARBOARD SIDE		1
-13	151-31006-39	.HAT - GUN-BAY ACCESS DOOR PORT SIDE		1
	151-31006-40	.HAT - GUN-BAY ACCESS DOOR STARBOARD SIDE		1
-14	151-31006-41	.HAT - GUN-BAY ACCESS DOOR PORT SIDE		1
	151-31006-42	.HAT - GUN-BAY ACCESS DOOR STARBOARD SIDE		1
-15	151-31006-11	.FRAME - GUN-BAY ACCESS DOOR PORT SIDE		1
	151-31006-12	.FRAME - GUN-BAY ACCESS DOOR STARBOARD SIDE		1
	151-31006-53	.CLIP - GUN-BAY DOOR REAR FRAME UPPER ATT		1
	151-31006-55	.CLIP - GUN-BAY DOOR REAR FRAME LOWER ATT		1
-16	151-31006-43	.CHANNEL - GUN-BAY ACCESS DOOR PORT SIDE		1
	151-31006-44	.CHANNEL - GUN-BAY ACCESS DOOR STBD SIDE		1
	151-31006-57	.CLIP - GUN-BAY ACC DOOR CHAN TO ANGLE ATT		1
	151-31006-18	.CLIP - GUN-BAY ACC DOOR CHAN TO FRAME ATT		1
-17	151-61090	.PLATE - .50 CAL GUN INSTRUCTION (PORT)		1
-18	151-31006-81	.SEAL - GUN-BAY ACCESS DOOR UPPER		1
	151-31006-83	.PLATE - GUN-BAY ACCESS DOOR UPPER SEAL		1
-19	151-31006-85	.SEAL - GUN-BAY ACCESS DOOR FORWARD UPPER		1
	151-31006-93	.STRIP - GUN-BAY ACCESS DOOR FWD UPPER SEAL		1
-20	151-31006-89	.SEAL - GUN-BAY ACCESS DOOR FORWARD INTER		1
	151-31006-91	.STRIP - GUN-BAY ACCESS DOOR FWD INTER SEAL		1
-21	151-31006-87	.SEAL - GUN-BAY ACCESS DOOR FORWARD LOWER		1
	151-31006-75	.STRIP - GUN-BAY ACCESS DOOR FWD LWR SEAL		1
-22	140-31020	.SUPPORT ASSY - GUN-BAY DOOR LATCH		1
	S5-225	..SPRING - FASTENER (DFC)		1
	AN960D4	..WASHER -		2
-23	140-31023	.LATCH ASSY - GUN-BAY DOOR		2
-24	4S4-8-26	.SPACER - RIVET (NAA)		2

FIGURE AND INDEX NUMBER	GROUP FUSELAGE MAJOR ASSEMBLY GUN-BAY ACCESS DOOR PART NUMBER	1234567 NOMENCLATURE	CODE	UNITS PER ASSY
33 -25	AN4-14A	•BOLT -		2
	AN365-428	•NUT -		2
-26	5B2-11	•BOLT - ADJUSTING (NAA)		2
	AN316-4R	•NUT -		2
-27	140-31021-21	•HANDLE ASSY - GUN-BAY DOOR FWD LATCH PORT		1
	140-31021-22	•HANDLE ASSY - GUN-BAY DOOR FWD LATCH STBD		1
-28	140-31021-23	•HANDLE ASSY - GUN-BAY DOOR REAR LATCH		1
	GA5-312	••GROMMET - FASTENER (DFC)		1
-29	A5-30	••FASTENER - OVAL HEAD (DFC)		1
-30	FJ5-190	•FASTENER - FLUSH HEAD (DFC)		1
	GSF5-T-250	•GROMMET - FASTENER (DFC)		1
-31	4S4-6-30	•SPACER - RIVET (NAA)		1
-32	AN3-14A	•BOLT -		2
	AN960-416L	•WASHER -		2
	AN960-416	•WASHER -		2
	AN365-1032	•NUT -		2
-33	170-31022	•LINK - FUSELAGE GUN-BAY DOOR LATCH		2
-34	151-31006-19	•PIN - GUN-BAY ACCESS DOOR LATCH LINK		2
-35	170-31024	•LINK - FUSELAGE GUN-BAY DOOR LATCH AUX		4
-36	170-31023	•PIN - FUSELAGE GUN-BAY DOOR LATCH		2
-37	KM610-64	•LATCH - PUSH-BUTTON (CFC) (UPPER)		1
-38	140-31026	•HANDLE - COCKPIT ACCESS		1
-39	151-31006-71	•CLIP - GUN-BAY ACC DOOR UPPER LATCH SPRING		1
-40	AN392-15	•PIN -		1
	AN380-2-2	•COTTER-PIN -		1
-41	140-31027-5	•BLOCK - COCKPIT ACCESS HANDLE		2
-42	NAS75-4-027	•BUSHING -		1
-43	140-31027-3	•BLOCK - COCKPIT ACCESS HANDLE		2
-44	AN4-26A	•BOLT -		1
	AN960-416	•WASHER -		1
	AN365-428	•NUT -		1
-45	140-31068	•SPACER - COCKPIT ACCESS HANDLE		1
-46	140-31027-3	•BLOCK - COCKPIT ACCESS HANDLE		2
-47	AN4-17A	•BOLT -		1
	AN365-428	•NUT -		1
-48	151-31703	•SPRING - COCKPIT ACCESS HANDLE		1
-49	FJ5-50	•FASTENER - FLUSH HEAD (DFC)		1
	GF5-175	•GROMMET - FASTENER (DFC)		1
		-000-		

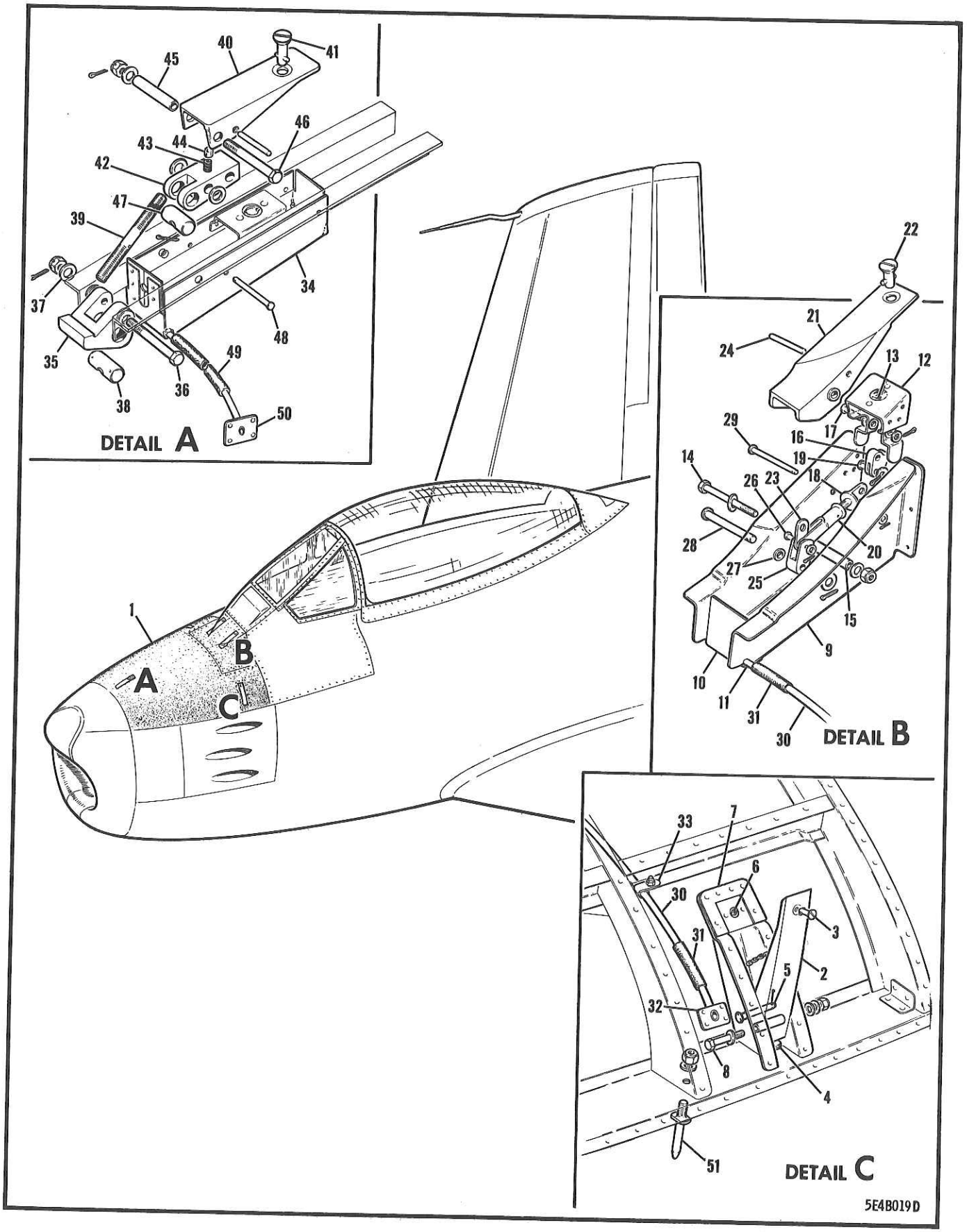

FIGURE 34 EQUIPMENT UPPER ACCESS DOOR

FIGURE AND INDEX NUMBER	GROUP FUSELAGE MAJOR ASSEMBLY EQUIPMENT UPPER ACCESS DOOR PART NUMBER	1234567 NOMENCLATURE	CODE	UNITS PER ASSY
34 -	172-31004-810	DOOR ASSY - FUSELAGE STA 15-54 UPPER EQUIPMENT ACCESS (SEE FIG. 32) (AS PER EO 05-5E-6A/85)		1
- 1	172-31004-953	•SKIN - UPPER ACCESS DOOR		1
	13B-30003-9	•LEVER ASSY - RADAR DOOR RELEASE		2
- 2	13B-30003-7	••LEVER - RADAR DOOR RELEASE		1
- 3	98264-2-150	••STUD - (MKM) (FLUSH HEAD)		1
	99785-2	••CROSS-PIN - AIRLOC FASTENER (MKM)		1
- 4	AN395-17	•PIN - (COVER LIFTING)		2
	4B18-5-290	•BUSHING - SHOULDER (5/16) (NAA)		2
	NAS43-7-16	•SPACER -		2
- 5	AN393-37	•PIN - (LEVER STOP)		2
	AN380-2-2	•PIN -		2
- 6	99871-P-.098	•RECEPTACLE - AIRLOC FASTENER STUD (MKM)		2
	172-31004-951	•RETAINER - RADAR DOOR RELEASE		2
	172-31004-952	•SHIM - RADAR DOOR RELEASE		2
- 7	13B-30004-3	•SUPPORT - RADAR DOOR RELEASE LEVER		2
- 8	AN3-14A	•BOLT -		2
	AN960-10	•WASHER -		2
	NAS43-3-68	•SPACER -		4
	AN960D516L	•WASHER -	371-	2
	AN365-1032	•NUT -		1
	172-31295-1	•LATCH ASSY - FUSELAGE STA 15-54 UPPER EQUIPMENT ACCESS DOOR LH		1
	172-31295-2	•LATCH ASSY - FUSELAGE STA 15-54 UPPER EQUIPMENT ACCESS DOOR RH		1
- 9	172-31295-3	••SUPPORT - EQUIP. UPPER ACC DOOR LATCH LH		1
	172-31295-4	••SUPPORT - EQUIP. UPPER ACC DOOR LATCH RH		1
-10	172-31295-7	••CLIP - EQUIP. UPPER ACC DOOR LATCH LH		1
	172-31295-8	••CLIP - EQUIP. UPPER ACC DOOR LATCH RH		1
-11	172-31295-9	••TUBE - UPPER EQUIP. ACC DOOR LATCH(DRAIN)		1
	172-31295-13	••SUPPORT ASSY - FUSELAGE STA 15-54 UPPER EQUIPMENT ACCESS DOOR LATCH		1
-12	172-31295-5	•••SUPPORT - EQUIPMENT ACCESS DOOR LATCH		1
	4B18B3-64	•••BUSHING - PRESS-FIT PLAIN (NAA)		2
-13	99833-P.130	•••RECEPTACLE - AIRLOC FASTENER STUD (MKM)		1
-14	AN3-20A	••BOLT -		1
	AN960C10L	••WASHER -		2
-15	NAS43DD3-97	••SPACER -		1
	AN365-1032	••NUT -		1
-16	172-31297	••LATCH - EQUIPMENT UP. ACC DOOR FUS STA 54		1
-17	AN393-29	••PIN - (LATCH TO SUPPORT ATT)		1
	AN960C10	••WASHER -		2
	AN381-2-6	••COTTER-PIN -		1
-18	AN43B7A	••BOLT - (CLEVIS TO LATCH ATTACHING)		1
-19	AN393-13	••PIN - (EYE-BOLT TO LATCH ATTACHING)		1
	AN960D10L	••WASHER -		1
	AN381-2-6	••COTTER-PIN -		1
-20	AN486-4	••CLEVIS -		1
	172-31294-1	••HANDLE ASSY - FUSELAGE STA 15-54 UPPER EQUIPMENT ACCESS DOOR REAR LH		1
	172-31294-2	••HANDLE ASSY - FUSELAGE STA 15-54 UPPER EQUIPMENT ACCESS DOOR REAR RH		1
-21	172-31296-1	•••HANDLE - EQUIP. UPPER ACC DOOR REAR LH		1
	172-31296-2	•••HANDLE - EQUIP. UPPER ACC DOOR REAR RH		1
-22	98265-2-210	•••STUD - FLUSH HEAD AIRLOC FASTENER (MKM)		1
	99836	•••CROSS-PIN - AIRLOC FASTENER (MKM)		1
-23	172-31294-5	•••LINK - EQUIP. UPPER ACC DOOR REAR HANDLE		1
	4B19S3-100	•••BUSHING - PRESS-FIT PLAIN (NAA)		1

FIGURE AND INDEX NUMBER	GROUP / MAJOR ASSEMBLY / PART NUMBER	FUSELAGE / EQUIPMENT UPPER ACCESS DOOR / 1234567 NOMENCLATURE	CODE	UNITS PER ASSY
34 -24	172-31294-3	•••STUD - EQUIP. UPPER ACC DOOR REAR HANDLE		1
-25	165-31328	••LINK - EQUIP. UPPER ACC DOOR FUS STA 3-54		1
-26	AN393-21	••PIN - (LINK TO CLEVIS ATTACHING)		1
	AN960C10L	••WASHER -		1
	AN381-2-6	••COTTER-PIN -		1
-27	4B18B5-51	••BUSHING - SHOULDER (NAA) (INBOARD)		2
-28	AN395-57	••PIN - (HANDLE HINGE)		1
	4B20S5-809	••BUSHING - PRESS-FIT FLANGED (NAA)		2
	AN960D516L	••WASHER -		1
	AN381-2-8	••PIN -		1
-29	AN393-53	••PIN -		1
	AN960C10L	••WASHER -		1
	AN381-2-6	••COTTER-PIN -		1
-30	172-31004-67	•TUBE - UPPER EQUIP. DOOR LATCH DRAIN LH		1
	172-31004-68	•TUBE - UPPER EQUIP. DOOR LATCH DRAIN RH		1
-31	172-31004-69	•TUBE - UP. EQUIP. DOOR LATCH DRAIN JOINING		1
-32	172-31004-91	•DRAIN ASSY - UPPER EQUIP. ACC DOOR LATCH		4
-33	AN742D5	•CLAMP - (DRAIN TUBE ATT PORT SIDE)		2
	NAS221-8	•SCREW -		2
	AN960-10	•WASHER -		2
	AN365-1032	•NUT -		2
-34	172-31024	•WELL ASSY - FUS STA 53 UPPER EQUIPMENT ACCESS DOOR LATCH DRAIN		2 1
-35	140-31057	•LATCH - RADIO COMPARTMENT DOOR FORWARD		1
-36	AN4-22	•BOLT -		1
	AN960-416L	•WASHER -		2
	AN960D416	•WASHER -		2
-37	AN960-416	•WASHER -		3
	AN310-4	•NUT -		1
	AN380-2-2	•COTTER-PIN -		1
-38	140-31058-3	•PIN - RADIO COMPARTMENT DOOR FORWARD LATCH		1
-39	140-31015-3	•SCREW - RADIO COMPT DOOR FORWARD LATCH ADJ		1
	99833-P.130	•RECEPTACLE - AIRLOC FASTENER STUD (MKM)		1
	170-31057-3	•HANDLE ASSY - FUSELAGE STA 17-54 UPPER EQUIPMENT ACCESS DOOR FORWARD		1
-40	170-31061	••HANDLE - EQUIPMENT UPPER ACC DOOR FORWARD		1
-41	98265-3-270	••STUD - FLUSH HEAD AIRLOC FASTENER (MKM)		1
	99836	••CROSS-PIN - AIRLOC FASTENER (MKM)		1
-42	170-31062	••LINK - FUS UP. EQUIP. ACC DOOR FWD HANDLE		1
-43	159-42074	••SPRING - COMPRESSION		1
-44	170-31064	••PLUG - EQUIPMENT UP. ACC DOOR FWD HANDLE		1
-45	NAS43C4-96	••SPACER -		1
	AN960D416	••WASHER -		1
-46	AN4-21	•BOLT -		1
	AN960-416	•WASHER -		1
	AN310-4	•NUT -		1
	AN380-2-2	•COTTER-PIN -		1
-47	140-31058-4	•PIN - RADIO COMPARTMENT DOOR FORWARD LATCH		1
-48	AN393-51	•PIN -		1
	AN380-2-2	•COTTER-PIN -		1
-49	172-31004-99	•TUBE - UPPER EQUIPMENT ACCESS DOOR FORWARD HANDLE WELL DRAIN		1
-50	172-31004-93	•DRAIN ASSY - UPPER EQUIPMENT ACCESS DOOR FORWARD HANDLE WELL		1
	316-5-6	•CLIP - INTEGRALLY BONDED SUPPORT (ADE)		1
	AN515-8R7	•SCREW -		1
	AN960PD8	•WASHER -		1
	AN679A08W	•NUT -		1
-51	140-31012-3	•STUD - DOOR SHEAR		6
	AN960-516	•WASHER -		6
	AN365-524	•NUT -		6

-000-

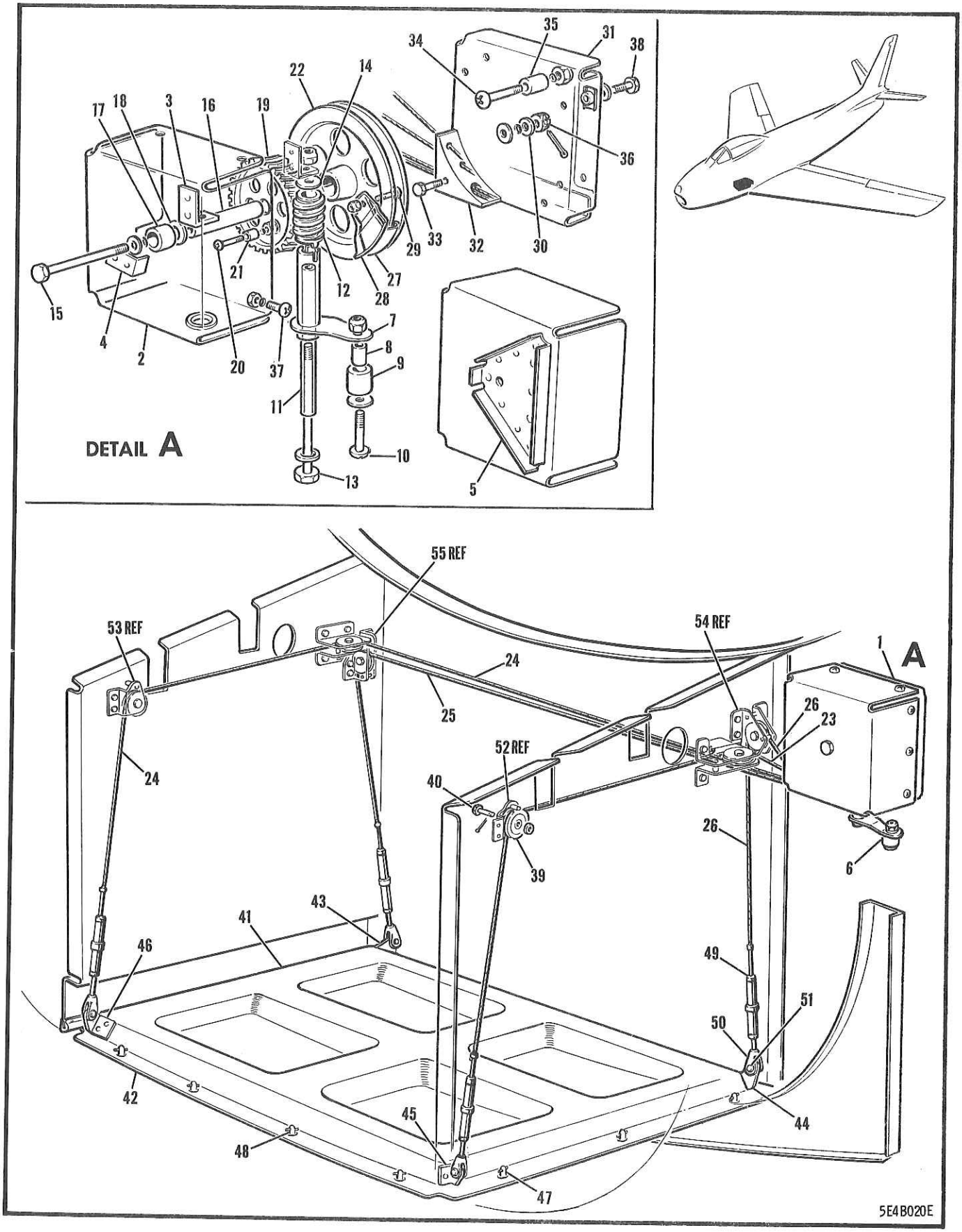

FIGURE 35 LOWER RADIO COMPARTMENT DOOR

FIGURE AND INDEX NUMBER	GROUP / MAJOR ASSEMBLY / PART NUMBER	FUSELAGE / LOWER RADIO COMPARTMENT DOOR / 1234567 NOMENCLATURE	CODE	UNITS PER ASSY
35 -	151-31020	DOOR INSTL - LOWER RADIO COMPT ACCESS FUS STA 109-126 (SEE FIG. 32)		NP
- 1	151-31710-800	•MECHANISM ASSY - FUSELAGE RADIO ACCESS DOOR (AS PER EO 05-5E-6A/50)		1
	151-31711-951	••HOUSING ASSY - FUSELAGE RADIO ACCESS DOOR		1
- 2	151-31711-3	•••HOUSING - LOWER RADIO COMPARTMENT DOOR		1
	4B18-8-40	•••BUSHING - PRESS-FIT SHOULDER (NAA)		1
- 3	151-31711-955	•••CLIP - (ANGLE)	001-430	1
	151-31711-953	•••CLIP - LOWER RADIO COMPT DOOR MECHANISM	431-	1
- 4	151-31711-9	•••CLIP - LOWER RADIO COMPT DOOR MECHANISM		1
- 5	151-31711-952	•••DOUBLER - LOWER RADIO COMPARTMENT DOOR MECHANICAL HOUSING		1
- 6	151-31712-800	••HANDLE ASSY - FUS RADIO ACCESS DOOR MECH		1
- 7	151-31712-951	•••HANDLE ASSY - MECHANISM		1
- 8	4S3-10-22	•••SPACER - BOLT (NAA)		1
- 9	4S3-616-20	•••SPACER - BOLT (NAA)		1
-10	NAS221-18	•••SCREW -		1
	AN960-10L	•••WASHER -		1
	AN365-1032	•••NUT -		1
-11	151-31710-951	••SPACER - RADIO COMPT ACCESS DOOR HANDLE		1
-12	140-54089	••WORM ASSY - CANOPY ACTUATING (RADIO COMPT ACCESS DOOR)		1
	140-54089-3	•••WORM - CANOPY ACTUATING (RADIO COMPT ACCESS DOOR)		1
	140-54089-5	•••BUSHING - CANOPY ACTUATING WORM (RADIO COMPARTMENT ACCESS DOOR)		1
-13	AN3-52	••BOLT -		1
	AN960-10	••WASHER -		2
-14	AN960-516	••WASHER -		1
	AN310-3	••NUT -		1
	AN380-2-2	••COTTER-PIN -		1
-15	AN4-24	••BOLT -		1
	AN960D416	••WASHER - (UNDER NUT)		1
-16	151-31710-5	••SPACER - LOWER RADIO COMPT ACC DOOR MECH		1
-17	4S3-616-20	••SPACER - BOLT (NAA)		1
-18	2W1AL24-20-32	••WASHER - PLAIN (NAA)		1
-19	140-54088-11	••WORM-GEAR ASSY - CANOPY ACTUATING (LOWER RADIO COMPARTMENT ACCESS DOOR)		1
	140-54088-7	•••WORM-GEAR - CANOPY ACTUATING (LOWER RADIO COMPARTMENT ACCESS DOOR)		1
	140-54088-5	•••BUSHING - CANOPY ACTUATING WORM-GEAR (LOWER RADIO COMPARTMENT ACC DOOR)		1
-20	NAS221-12	••SCREW -		1
-21	4S3-10-10	••SPACER - BOLT (NAA)		1
	AN365-1032	••NUT -		1
-22	151-31714	••DRUM - FUSELAGE RADIO ACCESS DOOR		1
-23	151-31716-21	••CABLE ASSY - FUSELAGE RADIO ACCESS DOOR		1
-24	151-31716-23	••CABLE ASSY - FUSELAGE RADIO ACCESS DOOR		1
-25	151-31716-25	••CABLE ASSY - FUSELAGE RADIO ACCESS DOOR		1
-26	151-31716-27	••CABLE ASSY - FUSELAGE RADIO ACCESS DOOR		1
	AN664C2	•••TERMINAL -		1

FIGURE AND INDEX NUMBER	GROUP FUSELAGE MAJOR ASSEMBLY LOWER RADIO COMPARTMENT DOOR PART NUMBER	1234567 NOMENCLATURE	CODE	UNITS PER ASSY
35 -	AN669S2	•••TERMINAL -		1
-27	161-31717	••CLAMP - FUSELAGE RADIO ACCESS DOOR CABLE		1
-28	161-31715	••GUARD - FUSELAGE RADIO ACCESS DOOR CABLE		1
-29	AN509-8-8	••SCREW - (CLAMP & GUARD TO DRUM ATTACHING)		2
	AN365-832	••NUT -		2
-30	2W1AL24-20-32	••WASHER - PLAIN (NAA)		1
	151-31711-17	••SUPPORT ASSY - LWR RADIO COMPT DOOR MECH		1
-31	151-31711-5	•••SUPPORT - LOWER RADIO COMPT DOOR MECH		1
&32	151-31711-19	•••FAIRLEAD - LOWER RADIO COMPT DOOR CABLE		1
-33	AN3-11A	•••BOLT - (FAIRLEAD TO SUPPORT ATTACHING)		1
	AN365-1032	•••NUT -		1
-34	NAS221-14	•••SCREW -		6
-35	4S3-10-17	•••SPACER - BOLT (NAA)		6
	AN365-1032	•••NUT -		6
-36	AN310-4	••NUT -		1
	AN380-2-3	••COTTER-PIN -		1
-37	NAS221-6	••SCREW - (HOUSING TO SUPPORT ATTACHING)		10
	AN365-1032	••NUT -		10
-38	AN3-4A	•BOLT - (SUPPORT ATTACHING)		6
	AN960-10	•WASHER -		4
	AN960-10L	•WASHER -		2
-39	AN210-1A	•PULLEY -		6
-40	AN3-6A	•BOLT - (PULLEY ATTACHING)		6
	AN960D10	•WASHER -		6
	AN365-1032	•NUT -		6
	151-31012	•DOOR ASSY - LOWER RADIO COMPARTMENT ACCESS FUS STA 109-126		1
-41	151-31012-5	••SKIN - LOWER RADIO COMPT ACC DOOR FUS STA 109-126 INNER		1
-42	151-31012-3	••SKIN - LOWER RADIO COMPT ACC DOOR FUS STA 109-126 OUTER		1
-43	151-31012-7	••CLIP - LOWER RADIO COMPT ACCESS DOOR		1
-44	151-31012-9	••CLIP - LOWER RADIO COMPT ACCESS DOOR		1
-45	151-31012-11	••CLIP - LOWER RADIO COMPT ACCESS DOOR		1
-46	151-31012-13	••CLIP - LOWER RADIO COMPT ACCESS DOOR		1
-47	99834-2-160	••STUD - FLUSH HEAD AIRLOC FASTENER (MKM)		10
-48	99834-2-170	••STUD - FLUSH HEAD AIRLOC FASTENER (MKM)		4
	99836	••CROSS-PIN - AIRLOC FASTENER (MKM)		14
-49	AN155-8S	•TURNBUCKLE -		4
-50	AN161-8RS	•FORK -		4
-51	AN393-9	•PIN -		4
	AN960-10L	•WASHER -		4
	AN380-2-2	•COTTER-PIN -		4
-52	151-31733-1	BRACKET - RADIO ACCESS DOOR FUS STA 109 PORT SIDE (SEE FIG. 42)		REF
-53	151-31733-2	BRACKET - RADIO ACCESS DOOR FUS STA 109 STBD SIDE (SEE FIG. 42)		REF
-54	151-31722	BRACKET ASSY - RADIO ACCESS DOOR FUS STA 125 PORT SIDE (SEE FIG. 42)		REF
-55	151-31735	BRACKET ASSY - RADIO ACCESS DOOR FUS STA 125 STBD SIDE (SEE FIG. 42)		REF

-000-

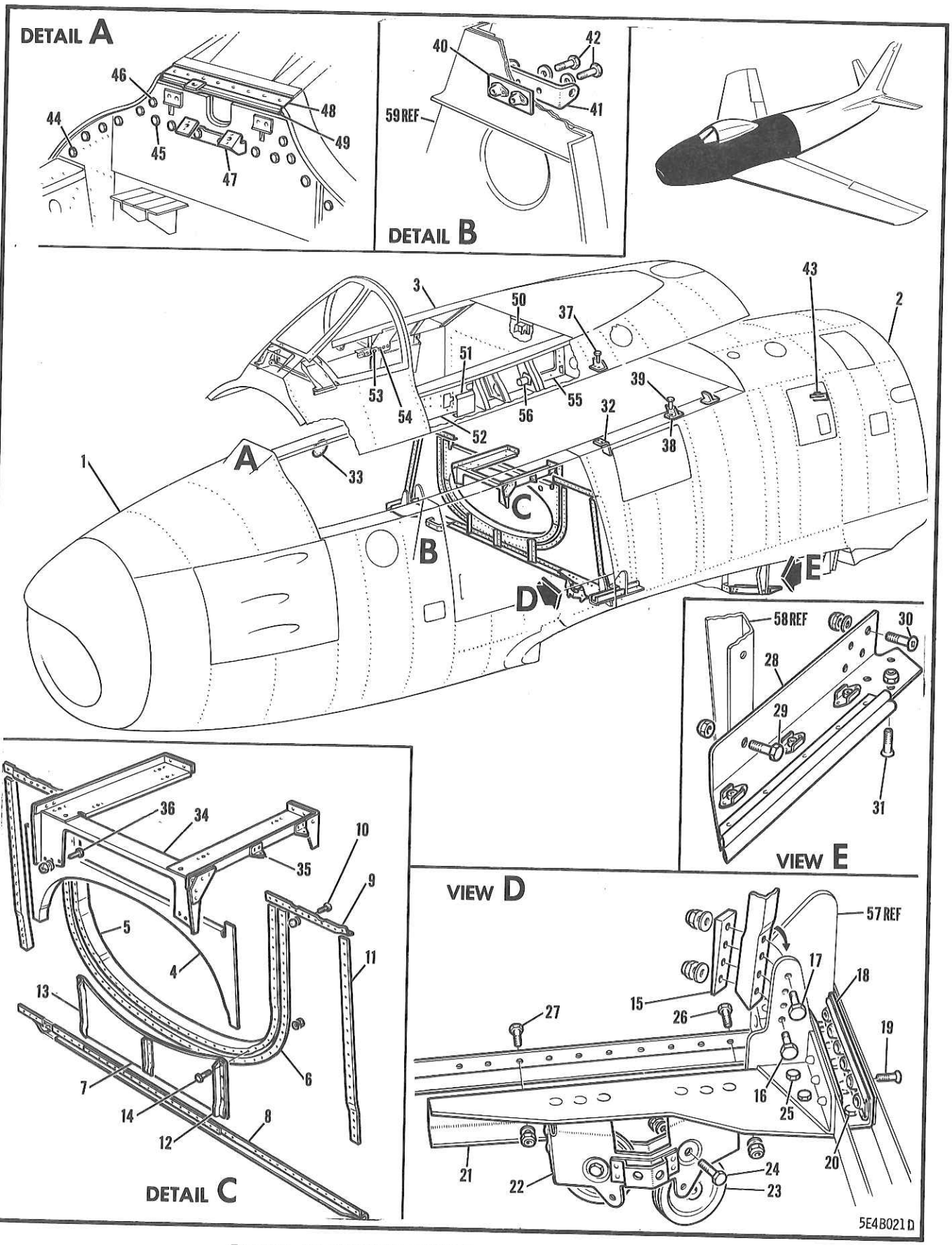

FIGURE 36 COVERED FORWARD FUSELAGE STA 0-236

FIGURE AND INDEX NUMBER	GROUP FUSELAGE MAJOR ASSEMBLY COVERED FORWARD FUSELAGE STA 0-236 PART NUMBER	1234567 NOMENCLATURE	CODE	UNITS PER ASSY
36 -	13A-30010	FUSELAGE ASSY - FORWARD SECTION (SEE FIG. 32)	001-100	1
	13A-30010-20	FUSELAGE ASSY - FORWARD SECTION	101-200	1
	13A-30010-60	FUSELAGE ASSY - FORWARD SECTION	201-210	1
	13A-30010-30	FUSELAGE ASSY - FORWARD SECTION	211-300	1
	13A-30010-40	FUSELAGE ASSY - FORWARD SECTION	301-370	1
	13A-30010-50	FUSELAGE ASSY - FORWARD SECTION	371-	1
	152-31801-40	•CANOPY INSTL - COCKPIT ENCL (SEE FIG. 68)		REF
	176-31801	•CANOPY INSTL - COCKPIT ENCLOSURE (SABRE 6) (SEE FIG. 69)		REF
	151-34001-10	•GEAR INSTL - NOSE (SEE SECTION 4)		REF
	170-53001-50	•FURNISHINGS INSTL - COMPLETE (SEE SECTION 6)		REF
	202-53001-801	•FURNISHINGS INSTL - COMPLETE (SEE SECTION 6)		REF
	176-52031	•SURFACE CONTROLS INSTL - FUSELAGE FORWARD (SEE SECTION 7)		REF
	13A-51031	•INSTRUMENT EQUIP. INSTL - FORWARD FUSELAGE (SEE SECTION 8)		REF
	172-31823-802	•SHROUD ASSY - COCKPIT ENCLOSURE INST PANEL (SEE SECTION 8)		REF
	191-54031	•ELECTRICAL EQUIP. INSTL - FORWARD FUSELAGE (SEE SECTION 10)		REF
	191-54231	•ELECTRICAL EQUIP. INSTL - INTERMEDIATE FUS (SEE SECTION 10)		REF
	172-58058	•HYDRAULIC EQUIP. INSTL - NOSE & STEERING FUS STA 0-84 (SEE SECTION 11)		REF
	172-58059	•HYDRAULIC EQUIP. INSTL - FUSELAGE STA 53-135 (SEE SECTION 11)		REF
	170-58060C	•HYDRAULIC EQUIP. INSTL - FUSELAGE STA 53-135 (SEE SECTION 11)		REF
	13A-71064	•HYDRAULIC INSTL - FUSELAGE STA 178-236 (SEE SECTION 11)		REF
	13A-74001	•HEAT & VENT SYS EQUIP. INSTL - COMPLETE (SEE SECTION 14)		REF
	172-53304	•CONTROLS INSTL - HEAT & VENT SYSTEM COMPL (SEE SECTION 14)		REF
	172-53307	•HEAT & VENT SYS EQUIP. INSTL - COCKPIT ENCLOSURE DEFROST (SEE SECTION 15)		REF
	176-73301	•OXYGEN SYSTEM EQUIP. INSTL - COMPLETE (SEE SECTION 17)		REF
	170-71031	•RADIO EQUIP. INSTL - FUSELAGE STA 0-236 (SEE SECTION 18)		REF
	172-74031	•RADAR EQUIP. INSTL - TYPE A4 GUNSIGHT & AN/APG30 (SEE SECTION 19)		REF
	151-73501-70	•PLATE INSTL - PILOT REAR ARMOUR (SEE SECTION 20)		REF
	13A-30002	•FUSELAGE ASSY - FORWARD STRUCTURE COMPLETE	001-100	1
	13A-30002-20	•FUSELAGE ASSY - FORWARD STRUCTURE COMPLETE	101-200	1
	13A-30002-60	•FUSELAGE ASSY - FORWARD STRUCTURE COMPLETE	201-210	1
	13A-30002-30	•FUSELAGE ASSY - FORWARD STRUCTURE COMPLETE	211-300	1
	13A-30002-40	•FUSELAGE ASSY - FORWARD STRUCTURE COMPLETE	301-370	1
	13A-30002-50	•FUSELAGE ASSY - FORWARD STRUCTURE COMPLETE	371-	1
- 1	151-31731-806	••FUSELAGE ASSY - NOSE SECTION STA 0-126 (SEE FIG. 39)		REF
- 2	13A-32001	••FUSELAGE ASSY - INTERMEDIATE SECTION STA 131-236 (SEE FIG. 56)		REF
- 3	172-31151-35	••DECK & WINDSHIELD ASSY - COCKPIT STRUCT (SEE FIG. 37)		REF
- 4	151-31523-15	••FRAME ASSY - FUSELAGE STA 126 DUCT UPPER		1

FIGURE AND INDEX NUMBER	GROUP FUSELAGE MAJOR ASSEMBLY COVERED FORWARD FUSELAGE STA 0-236 PART NUMBER	1234567 NOMENCLATURE	CODE	UNITS PER ASSY
36 - 5	151-31520-3	••FRAME - FUSELAGE CANTED STA 126 DUCT LWR		1
- 6	151-31525-3	••ANGLE - FUSELAGE CANTED STA 126 SUP•OUTER		1
- 7	151-31524-10	••WEB ASSY - FUSELAGE CANTED STA 126 LOWER		1
- 8	151-31756-10	••BEAM - FUSELAGE CANTED STA 126 LOWER		1
- 9	151-31526-3	••ANGLE - FUSELAGE CANTED STA 126 UPPER PORT SIDE		1
	151-31526-2	••ANGLE - FUSELAGE CANTED STA 126 UPPER STARBOARD SIDE		1
-10	AN3-4A	••BOLT - (ANGLE TO STIFFENER ATT)		4
	AN960-10L	••WASHER -		4
	AN365-1032	••NUT -		4
-11	151-31545-3	••ANGLE - FUSELAGE CANTED STA 126 FRAME TO FITTING PORT SIDE		1
	151-31545-4	••ANGLE - FUSELAGE CANTED STA 126 FRAME TO FITTING STARBOARD SIDE		1
-12	151-31761	••ANGLE - FUSELAGE CANTED STA 126 LOWER WEB SPLICE PORT SIDE		1
-13	151-31758	••ANGLE - FUSELAGE CANTED STA 126 LOWER WEB SPLICE STARBOARD SIDE		1
14	AN3-5A	••BOLT - (ANGLE TO FRAME ATT)		2
	AN960-10	••WASHER -		2
	AN365-1032	••NUT -		2
-15	13A-30002-3	••SHIM - FUSELAGE FORWARD FRAME LH		1
	13A-30002-4	••SHIM - FUSELAGE FORWARD FRAME RH		1
-16	AN5-10A	••BOLT - (ANGLE TO FITTING ATT)		6
-17	AN5-11A	••BOLT - (ANGLE TO FITTING ATT)		2
	AN960-516	••WASHER -		8
	AN365-524	••NUT -		8
-18	151-31530-1	••CHANNEL - FUSELAGE STA 131 LONGERON ATT FITTING PORT SIDE		1
	151-31530-2	••CHANNEL - FUSELAGE STA 131 LONGERON ATT FITTING STARBOARD SIDE		1
-19	AN509-416R13	••SCREW - (CHANNEL TO LONGERON ATT)		12
-20	AN4-11A	••BOLT -		6
	AN960-416	••WASHER -		6
	AN960-416L	••WASHER -		2
	AN365-428	••NUT -		6
-21	151-31753-1	••CHANNEL - FITTING TO CROSS-TIE STA 126 PORT SIDE		1
	151-31753-2	••CHANNEL - FITTING TO CROSS-TIE STA 126 STARBOARD SIDE		1
	151-31768	••SHIM - LOWER CROSS-BEAM BOLTING CANTED FUS STA 126		2
	151-31532	••SHIM - LONGERON TO WING ATT FUS STA 131		2
	170-68721	••BRACKET ASSY - EMERGENCY JETTISON PULLEY FUS STA 128 (PORT SIDE)	001-210	1
-22	170-68721-11	•••BRACKET - EMERGENCY JETT PUL FUS STA 128	001-210	1
-23	AN210-2B	•••PULLEY -	001-210	2
-24	AN3-7A	•••BOLT - MPI (PULLEY ATT)	001-210	2
	AN960D10	•••WASHER -	001-210	2
	AN365-1032	•••NUT -	001-210	2
-25	AN3-5A	••BOLT - (FITTING TO CHANNEL ATT)		4
	AN960-10	••WASHER -		4
	AN365-1032	••NUT -		4
-26	AN4-7A	••BOLT - (CHANNEL TO FITTING TO BEAM ATT)		8
	AN365-428	••NUT -		8
-27	AN3-5A	••BOLT - (CHANNEL TO BEAM ATT)		16
	AN960-10	••WASHER -		28
	AN365-1032	••NUT -		16
-28	151-31533-1	••ANGLE ASSY - LDG/GR DOOR FUS STA 178 PORT		1

FIGURE AND INDEX NUMBER	GROUP FUSELAGE MAJOR ASSEMBLY COVERED FORWARD FUSELAGE STA 0-236 PART NUMBER	1234567 NOMENCLATURE	CODE	UNITS PER ASSY
36 -	151-31533-2	••ANGLE ASSY - LDG/GR DOOR FUS STA 178 STBD		1
-29	AN3-4A	••BOLT - (ANGLE TO BRACKET ATT)		2
	AN365-1032	••NUT -		2
-30	NAS220-9	••SCREW -		8
	AN960-8L	••WASHER -		8
	AN365-832	••NUT -		8
-31	NAS204-8	••SCREW -		6
	AN365-832	••NUT -		6
-32	151-31782-1	••CLIP - UPPER LONGN ATT LWR FUS STA 133 PORT SIDE		1
	151-31782-2	••CLIP - UPPER LONGN ATT LWR FUS STA 133 STARBOARD SIDE		1
-33	161-31006	••COVER - FUSELAGE STA 96 PRESRZTN ACC HOLE (STARBOARD SIDE)	001-300	1
-34	151-71037-10	••SUPPORT ASSY - RADIO COMPASS RECEIVER		1
-35	2C29-8	•••CLIP - (NAA)		2
-36	NAS220-7	••SCREW -		12
	AN960-8	••WASHER -		12
	AN365-832	••NUT -		12
-37	AN4-10A	••BOLT - (LONGERON TO CLIP STA 133)		4
	AN960-416	••WASHER -		4
	AN365-428	••NUT -		4
-38	161-31226-1	••FITTING - FUSELAGE TO CANOPY TOP DECK ATTACHING PORT SIDE (STA 156 & 167)		2
	161-31226-2	••FITTING - FUSELAGE TO CANOPY TOP DECK ATTACHING STBD SIDE (STA 156 & 167)		2
	13A-30002-6	••SHIM - (TO BE USED ONLY WHEN GAP OCCURS BETWEEN FRAMES & FITTINGS)		AR
	13A-30002-7	••SHIM - (TO BE USED ONLY WHEN GAP OCCURS BETWEEN FRAMES & FITTINGS)		AR
	AN3-5A	••BOLT - (4 REQD WHEN SHIM USED)		AR
	AN960PD10L	••WASHER -		AR
	AN960PD10	••WASHER -		AR
	AN365-1032	••NUT - (4 REQD WHEN SHIM USED)		AR
-39	AN4-6A	••BOLT - (FITTING TO LONGERON ATT)		8
	AN960-416	••WASHER -		8
	AN365-428	••NUT -		8
	13A-30004	••FIXTURE INSTL - FIXED .50 CAL GUN BORE-SIGHT TARGET ALIGNING		NP
-40	140-61123	•••PLATE ASSY - FIXED GUN BORE-SIGHT TARGET ALIGNING FIXTURE (FORWARD)		1
-41	140-61122	•••CHANNEL - FIXED GUN BORE-SIGHT TARGET ALIGNING FIXTURE (FORWARD)		1
-42	AN3H5A	•••BOLT - (CHANNEL TO FRAME ATT)		2
	AN960D10	•••WASHER -		2
-43	13A-32046	•••ANGLE ASSY - FIXED GUN BORE-SIGHT REAR ALIGNING FIXTURE		1
	99947-P.130	••••RECEPTACLE - AIRLOC FASTENER FLOATING STUD (MKM)		1
	NAS221-12	•••SCREW -		3
	NAS221-13	•••SCREW -		2
	AN960-10	•••WASHER -		5
	AN364-1032	•••NUT -		5
-44	AN4-12A	••BOLT - (UPPER FRAME TO WINDSHIELD FRAME ATT STA 53)		2
	AN960-416	••WASHER -		2
	AN365-428	••NUT -		2
-45	AN3-10A	••BOLT - (UPPER FRAME TO WINDSHIELD FRAME ATT STA 53)		6
-46	AN3-14A	••BOLT - (UPPER FRAME TO WINDSHIELD FRAME ATT STA 53)		10

FIGURE AND INDEX NUMBER	GROUP / MAJOR ASSEMBLY / PART NUMBER	FUSELAGE / COVERED FORWARD FUSELAGE STA 0-236 / 1234567 NOMENCLATURE	CODE	UNITS PER ASSY
36 -	AN960D10	••WASHER -		16
	AN365-1032	••NUT -		16
-47	172-53328	••SUPPORT ASSY - HEAT & VENT SYSTEM WNDSHLD ANTI-ICING NOZZLE		1
	AN520-10R8	••SCREW - (SUPPORT ATT)		2
	172-31293	••ANGLE ASSY - RADIO DOOR SEAL FUS STA 53		1
-48	172-31293-11	•••ANGLE - (RADIO DOOR SEAL)		1
	172-31293-13	•••SEAL - (RADIO DOOR)		1
-49	172-31293-15	•••RETAINER - (RADIO DOOR SEAL)		1
	172-31293-9	•••SEAL - (RADIO DOOR)		1
	5B17C5A	••BOLT - CORROSION RESISTANT (10-32) (NAA)		6
-50	151-58383	••BRACKET ASSY - HYDRAULIC EMY SPEEDBRAKE DUMP VALVE SUPPORT	001-030	1
-51	151-54191	••INSULATOR - ELECTRICAL PROJECTOR RELEASE	001-200	1
	152-31412-801	••WEB ASSY - FUSELAGE STA 81-96 INTERNAL (PORT SIDE)	491-	1
-52	152-31412-803	•••WEB - FUSELAGE STA 81-96 INTERNAL (AS PER EO 05-5E-6A/65)	491-	1
	151-48143-800	•••PLATE - FUEL SERVICE INFORMATION (AS PER EO 05-5E-6A/217)		1
	151-48143-800	•••PLATE - (REPLACES 151-48143 AS PER EO 05-5E-6A/217)		1
	AN530-6R4	•••SCREW - (PLATE ATTACHING)		4
	S-1264-2	•••NAME-PLATE - AIRPLANE IDENT (CAN)	663-	1
	AN530-6R6	•••SCREW - (PLATE ATTACHING)	663-	4
	NAS202-832-8	••SCREW - (WEB ATT PORT SIDE)		10
-53	AN3-10A	••BOLT - (MAP CASE TO LONGN ATT STBD SIDE)		1
	AN960D10	••WASHER - (STARBOARD SIDE)		1
	AN365-1032	••NUT - (STARBOARD SIDE)		1
-54	AN509-10-13	••SCREW - (STARBOARD SIDE)		2
	AN509-10-15	••SCREW - (STARBOARD SIDE)		1
	AN960D10	••WASHER - (STARBOARD SIDE)		3
	AN365-1032	••NUT - (STARBOARD SIDE)		3
-55	151-54053-11	••PANEL ASSY - PRESSURE ELEC DISCONNECT PORT SIDE		1
	151-54053-12	••PANEL ASSY - PRESSURE ELEC DISCONNECT STARBOARD SIDE		1
	140-53374	••GASKET - HEAT & VENT OUTLET FUSELAGE STA 113 PRESSURE (PORT SIDE)		1
-56	151-53493	••TUBE ASSY - HEAT & VENT OUTLET FUSELAGE STA 113 PRESSURE (PORT SIDE)		1
	151-53492	•••PLATE - HEAT & VENT OUTLET FUS STA 113 PRESSURE TUBE (PORT SIDE)		1
	151-53491	•••TUBE - HEAT & VENT OUTLET FUS STA 113 PRESSURE (PORT SIDE)		1
	AN520-10R10	••SCREW - (TUBE & GASKET ATT PORT SIDE)		4
	AN960-10	••WASHER -		4
	AN365-1032	••NUT -		4
-57	151-31216-1	FITTING - FUSELAGE STA 131-133 WING FWD ATTACHING PORT SIDE (SEE FIG. 62)		REF
-58	151-31276-1	BRACKET ASSY - LONGERON LDG/GR TO DOOR JAMB FORWARD (SEE FIG. 56)		REF
-59	151-31127-1	FRAME ASSY - FUS STA 84 SIDE (SEE FIG. 51)		REF
		(CONTINUED SEE FIG. 67)		

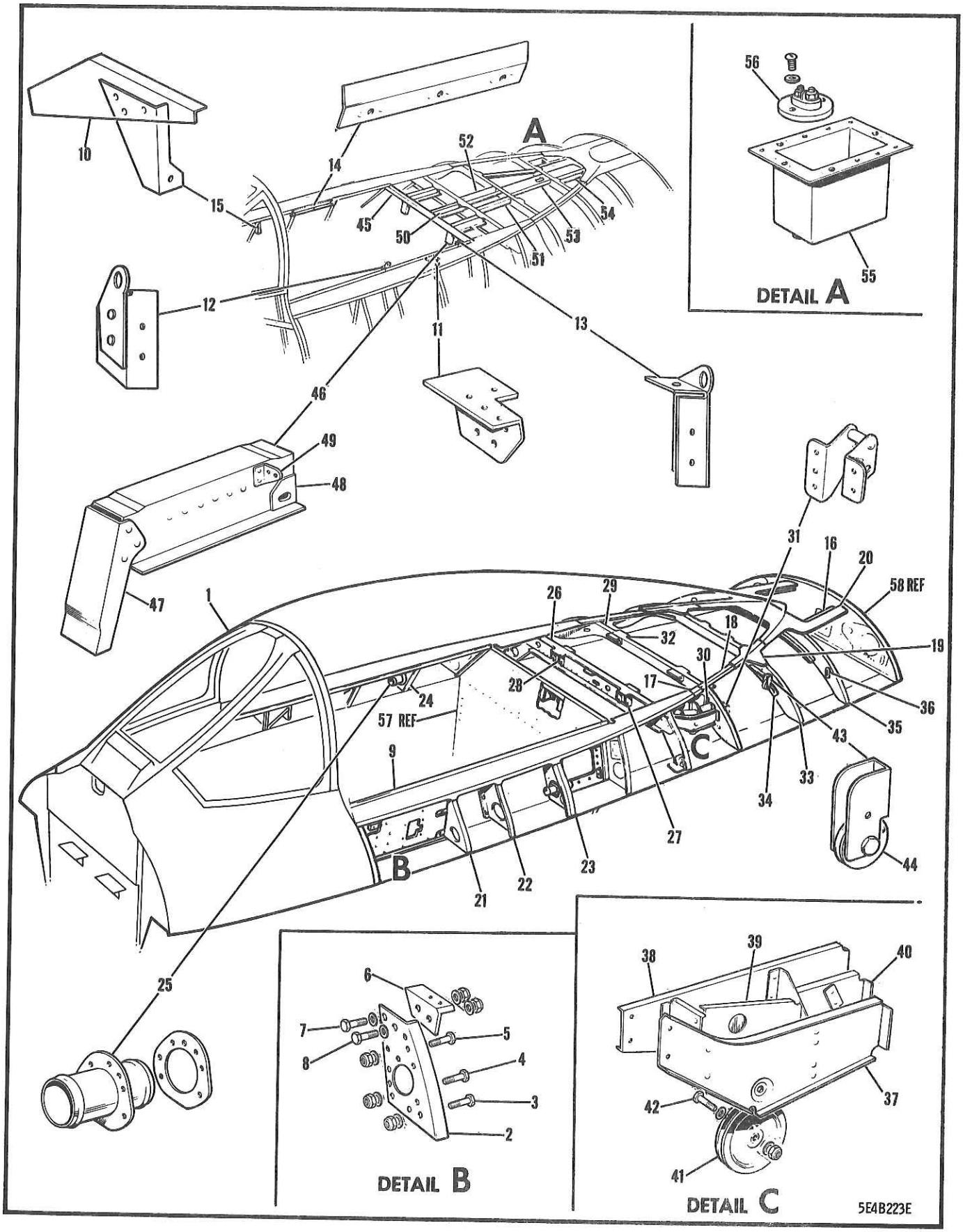

FIGURE 37 COCKPIT DECK & WINDSHIELD STRUCTURE

FIGURE AND INDEX NUMBER	GROUP FUSELAGE MAJOR ASSEMBLY COCKPIT DECK & WINDSHIELD STRUCTURE PART NUMBER	1234567 NOMENCLATURE	CODE	UNITS PER ASSY
37 -	172-31151-35	DECK & WINDSHIELD ASSY - FUSELAGE STA 53-178 (SEE FIG. 36)	001-210	1
	172-31151-800	DECK & WINDSHIELD ASSY - FUSELAGE STA 53-178	211-370	1
	172-31151-805	DECK & WINDSHIELD ASSY - FUS STA 53-178	371-	1
- 1	172-31861-40	•WINDSHIELD ASSY - COCKPIT ENCLOSURE (COMPLETE) (SEE FIG. 67)		REF
	172-31403-1	•FRAME ASSY - FUSELAGE STA 81 UPPER DECK LONGERON PORT SIDE		1
- 2	172-31403-3	••FRAME - FUSELAGE STA 81 UPPER DECK LONGERON PORT SIDE		1
	2C12	••CLIP - (NAA) (PORT SIDE)		1
	172-31403-2	•FRAME - FUSELAGE STA 81 UPPER DECK LONGERON STARBOARD SIDE		1
- 3	AN4-6A	•BOLT -		6
- 4	5B18C6A	•BOLT - CORROSION RESISTANT - 1/4-28 (NAA)		6
	AN960D416	•WASHER -		24
	AN363C428	•NUT -		12
- 5	5B17C4A	•BOLT - CORROSION RESISTANT - 10-32 (NAA)		10
	AN960D10L	•WASHER -		20
	AN363C1032	•NUT -		10
- 6	172-31856-1	•CLIP - COCKPIT ENCLOSURE FUS STA 81 CANOPY DECK ATTACHING PORT SIDE		1
	172-31856-2	•CLIP - COCKPIT ENCLOSURE FUS STA 81 CANOPY DECK ATTACHING STARBOARD SIDE		1
- 7	AN5-6A	•BOLT -		2
- 8	5B19C6A	•BOLT - CORROSION RESISTANT - 5/16-24 (NAA)		2
	AN960D516	•WASHER -		8
	AN363C524	•NUT -		4
	152-31415-41	•LONGERON ASSY - CANOPY DECK FUSELAGE STA 81-141 PORT SIDE		1
	152-31415-40	•LONGERON ASSY - CANOPY DECK FUSELAGE STA 81-141 STARBOARD SIDE		1
9	152-31415-17	••LONGERON - CANOPY DECK FUS STA 81-141 PORT SIDE		1
	152-31415-18	••LONGERON - CANOPY DECK FUS STA 81-141 STARBOARD SIDE		1
	152-31415-5	••ANGLE - CANOPY DECK FUS STA 104 (PORT)		1
	152-31415-9	••ANGLE - CANOPY DECK FUS STA 82-89 (STBD)		1
	152-31415-11	••ANGLE - CANOPY DECK FUS STA 90-96 (STBD)		1
-10	152-31415-15	••CLIP - CANOPY DECK FUS STA 96		1
	151-31413-1	••CLIP - CANOPY LONGERON TO FUS STA 96 FRAME (PORT SIDE)		1
-11	151-31414-1	••CLIP - CANOPY LONGN TO FUS STA 113 FRAME PORT SIDE		1
	151-31414-2	••CLIP - CANOPY LONGN TO FUS STA 113 FRAME STARBOARD SIDE		1
-12	172-53413-3	••SUPPORT ASSY - HEAT & VENT SYSTEM COCKPIT ENCLOSURE DEFROST DUCT PORT SIDE		1
	172-53413-6	••SUPPORT ASSY - HEAT & VENT SYSTEM COCKPIT ENCLOSURE DEFROST DUCT STBD SIDE		1
	172-53413-5	••SUPPORT ASSY - HEAT & VENT SYSTEM COCKPIT ENCLOSURE DEFROST DUCT PORT SIDE		1
-13	172-53414-3	••CLIP ASSY - HEAT & VENT SYS COCKPIT ENCL DEFROST DUCT PORT SIDE		1
	172-53414-6	••CLIP ASSY - HEAT & VENT SYS COCKPIT ENCL DEFROST DUCT STARBOARD SIDE		2
	172-54113-1	••ANGLE ASSY - CKT/BKR PANEL TOP ATT PORT		1
-14	172-54113-2	••ANGLE ASSY - CKT/BKR PANEL TOP ATT STBD		1
-15	172-54116	••CLIP ASSY - COCKPIT LIGHT RHEOSTAT PANEL MTG FORWARD (STBD)		1

FIGURE AND INDEX NUMBER	GROUP FUSELAGE MAJOR ASSEMBLY COCKPIT DECK & WINDSHIELD STRUCTURE PART NUMBER	1234567 NOMENCLATURE	CODE	UNITS PER ASSY
37 -	S4-225	••SPRING - FASTENER (DFC)		4
-16	172-31416-1	•STIFFENER - FUSELAGE STA 150-176 UPPER SKIN PORT SIDE		1
	172-31416-2	•STIFFENER - FUSELAGE STA 150-176 UPPER SKIN STARBOARD SIDE		1
-17	172-31418-1	•LONGERON - FUSELAGE STA 133-167 UP. DECK PORT SIDE		1
	172-31418-2	•LONGERON - FUSELAGE STA 133-167 UP. DECK STARBOARD SIDE		1
-18	172-31419-1	•STIFFENER - FUSELAGE STA 133-167 UPPER DECK PORT SIDE		1
	172-31419-2	•STIFFENER - FUSELAGE STA 133-167 UPPER DECK STARBOARD SIDE		1
	AN4-7A	•BOLT -		2
	AN960-416	•WASHER -		2
	AN365-428	•NUT -		2
-19	172-31417-1	•GUSSET - FUSELAGE STA 156 UPPER DECK LONGERON PORT SIDE		1
	172-31417-2	•GUSSET - FUSELAGE STA 156 UPPER DECK LONGERON STARBOARD SIDE		1
	AN509-10R10	•SCREW -	201-	6
	AN509-10R13	•SCREW -	201-	2
	2W18-10	•WASHER - PLAIN (NAA)	201-	8
	AN365-1032	•NUT -	201-	8
-20	172-31424	•GUSSET - CANOPY LONGN SPLICE FUS STA 167		1
-21	151-31404-51	•FRAME ASSY - FUSELAGE STA 96 UPPER PORT		1
	151-31404-13	••FRAME - FUSELAGE STA 96 UPPER PORT SIDE		1
	151-31404-15	••DOUBLER - UPPER FRAME FUS STA 96 PORT		1
	151-31404-17	••DOUBLER - UPPER FRAME FUS STA 96 PORT		1
	152-31429	•ANGLE - UPPER SIDE FRAME FUS STA 96 STBD		1
-22	151-31405-11	•FRAME ASSY - FUSELAGE STA 104 UPPER PORT		1
	151-31405-5	••FRAME - FUSELAGE STA 104 UPPER PORT SIDE		1
	152-31405-20	•FRAME ASSY - FUSELAGE STA 104 UPPER STBD		1
	152-31405-11	••FRAME - FUSELAGE STA 104 UPPER STBD SIDE		1
	152-31405-13	••DOUBLER - FUSELAGE STA 104 UPPER STARBOARD SIDE FRAME		1
	S4-225	••SPRING - FASTENER (DFC)		1
	151-31406-11	•FRAME ASSY - FUSELAGE STA 113 UPPER PORT		1
	151-31406-12	•FRAME ASSY - FUSELAGE STA 113 UPPER STBD		1
-23	151-31406-9	••FRAME - FUSELAGE STA 113 UPPER PORT SIDE		1
-24	151-31406-10	••FRAME - FUSELAGE STA 113 UPPER STBD SIDE		1
	151-31406-5	••DOUBLER - FUSELAGE STA 113 PORT UP. FRAME		1
	151-31406-6	••DOUBLER - FUSELAGE STA 113 STBD UP. FRAME		1
	151-31406-7	••ANGLE - UPPER FRAME FUS STA 113 PORT		1
	151-31406-8	••ANGLE - FRAME UPPER FUS STA 113 STARBOARD		1
-25	151-53481	••TUBE ASSY - HEAT & VENT SYSTEM PRESSURE & VENT BULKHEAD SEAL (STARBOARD)		1
	140-53386	••GASKET - HEAT & VENT SYSTEM PRESSURE & VENT BULKHEAD SEAL STA 113 (STBD)		1
	AN515-8R8	••SCREW - (STARBOARD)		7
	AN515-8R10	••SCREW - (STARBOARD)		1
	AN960-8L	••WASHER - (STARBOARD)		7
	AN960-8	••WASHER - (STARBOARD)		1
	AN365-832	••NUT - (STARBOARD SIDE)		8
-26	152-31407-100	•FRAME ASSY - FUSELAGE STA 133 UPPER		1
	152-31407-5	••FRAME - FUSELAGE STA 133 UPPER (PORT)		1
	152-31407-7	••FRAME - FUSELAGE STA 133 UPPER (STBD)		1
	152-31407-9	••CLIP - FUSELAGE STA 133 UP. FRAME (PORT)		1
	152-31407-11	••ANGLE - FUSELAGE STA 133 UP. FRAME (STBD)		1
	152-31407-13	••CLIP - FUSELAGE STA 133 UP. FRAME (PORT)		1

FIGURE AND INDEX NUMBER	GROUP FUSELAGE MAJOR ASSEMBLY COCKPIT DECK & WINDSHIELD STRUCTURE PART NUMBER	1234567 NOMENCLATURE	CODE	UNITS PER ASSY
37 -	152-31407-15	••CLIP - FUSELAGE STA 133 UP. FRAME (PORT)		1
-27	152-31407-17	••CHANNEL - FUSELAGE STA 133 UP. FRA (PORT)		1
	152-31407-19	••EXTRUSION - FUSELAGE STA 133 UP. FRA STBD		2
	152-31407-21	••CHANNEL - FUSELAGE STA 133 UPPER FRAME		1
-28	152-31407-23	••CHANNEL - FUSELAGE STA 133 UP. FRA (STBD)		1
	152-31407-25	••CLIP - FUSELAGE STA 133 UP. FRAME (PORT)		1
	152-31407-27	••ANGLE - FUSELAGE STA 133 UP. FRAME (STBD)		1
	152-31407-31	••ANGLE - FUSELAGE STA 133 UPPER FRAME		1
	152-31407-33	••CHANNEL - FUSELAGE STA 133 UPPER FRAME		1
	152-31875	••FAIRLEAD - CANOPY OUTER EMY RELEASE CABLE		1
	176-52230	••FAIRLEAD - HORIZONTAL STABILIZER CONTROL FUS STA 133 CABLE		2
	AN42-4A	•BOLT -		1
	AN960D10	•WASHER -		1
	AN365-1032	•NUT -		1
	170-31408-35	•FRAME ASSY - FUSELAGE STA 145 UPPER		1
-29	170-31408-3	••FRAME - FUSELAGE STA 145 UPPER		1
	170-31408-5	••ANGLE - FUSELAGE STA 145 UP. FRAME (PORT)		1
	170-31408-7	••ANGLE - FUSELAGE STA 145 UPPER FRAME		1
	170-31408-9	••ANGLE - FUSELAGE STA 145 UP. FRAME (STBD)		1
	170-31408-11	••DOUBLER - FUSELAGE STA 145 UPPER FRAME		1
	170-31408-13	••CLIP - FUSELAGE STA 145 UP. FRAME (PORT)		1
	170-31408-19	••CLIP - FUSELAGE STA 145 UPPER FRAME		2
	170-31408-21	••CLIP - FUSELAGE STA 145 UP. FRAME (STBD)		1
	170-31408-23	••ANGLE - FUSELAGE STA 145 UPPER FRAME		2
-30	170-52256	••FAIRLEAD - HORIZONTAL STAB. FUS STA 145 LH CONTROL CABLE		1
	170-52216	••FAIRLEAD - HORIZONTAL STAB. FUS STA 145 RH CONTROL CABLE		1
-31	151-43034	••BRACKET ASSY - ENGINE CTL FUS STA 145 PUL		1
	4S4D4-20	•••SPACER - (NAA)		1
-32	152-31833	••ANGLE - CANOPY TRACK SUPPORT FUS STA 145		2
	172-31409	•FRAME ASSY - FUSELAGE STA 156 UPPER SIDE		1
-33	172-31409-3	••FRAME - FUSELAGE STA 156 UPPER SIDE		1
	172-31409-5	••ANGLE - FUSELAGE STA 156 UPPER FRAME		1
	172-31409-7	••CLIP - FUSELAGE STA 156 UPPER FRAME PORT		1
	172-31409-8	••CLIP - FUSELAGE STA 156 UPPER FRAME STBD		1
	172-31409-9	••SHIM - FUSELAGE STA 156 UPPER FRAME		2
	172-31409-11	••STRAP - FUSELAGE STA 156 UPPER FRAME		1
	172-31415	••CLIP - FUSELAGE STA 156 STIFFENER TO ANGLE TIE		1
-34	170-43033	••FAIRLEAD - ENGINE CONTROL FUS STA 156 CABLE (PORT SIDE)		1
	2F4	••FAIRLEAD - (NAA) (PORT)		1
	172-31410	•FRAME ASSY - FUSELAGE STA 167 UPPER SIDE		1
-35	172-31410-3	••FRAME - FUSELAGE STA 167 UPPER SIDE		1
	172-31410-5	••ANGLE - FUSELAGE STA 167 UPPER FRAME		1
	172-31410-7	••CLIP - FUSELAGE STA 167 UPPER FRAME		2
	172-31410-9	••CLIP - FUSELAGE STA 167 UPPER FRAME		2
-36	151-43101	••FAIRLEAD - ENGINE CONTROL FUS STA 167 CABLE (PORT SIDE)		1
	2F4	••FAIRLEAD - CABLE (NAA) (LDG/GR EMY REL) (STARBOARD SIDE)		1
	170-52020	•BRACKET ASSY - HOR/STAB CONTROL FUS STA 133-145 PULLEY		1
-37	170-52020-3	••BRACKET - FUSELAGE STA 133-145 PULLEY		1
-38	170-52020-5	••BRACKET - FUSELAGE STA 133-145 PULLEY		1
-39	170-52020-7	••BRACKET - FUSELAGE STA 133-145 PULLEY		1
-40	170-52020-9	••BRACKET - FUSELAGE STA 133-145 PULLEY		1
	170-52020-11	••BRACKET - FUSELAGE STA 133-145 PULLEY		1

FIGURE AND INDEX NUMBER	GROUP / MAJOR ASSEMBLY / PART NUMBER	FUSELAGE / COCKPIT DECK & WINDSHIELD STRUCTURE / 1234567 NOMENCLATURE	CODE	UNITS PER ASSY
37 -	170-52020-13	••BRACKET - PULLEY		1
	170-52020-15	••PLATE - FUSELAGE STA 133-145 PULLEY RUB.		2
-41	AN210-2A	••PULLEY -		1
-42	AN3-7A	••BOLT - MPI		1
	AN960D10	••WASHER -		2
	AN365-1032	••NUT -		1
	2F4	••FAIRLEAD - CABLE (NAA)		1
	170-522109	•BRACKET ASSY - HORIZONTAL STAB. CONTROL FUSELAGE STA 106		2
-43	170-522109-3	••BRACKET - HORIZONTAL STABILIZER CONTROL FUSELAGE STA 106		1
-44	AN210-1B	••PULLEY -		1
	AN3-6A	••BOLT -		1
	AN960D10	••WASHER -		1
	AN365-1032	••NUT -		1
	2W1AL16-32	•WASHER - PLAIN (NAA)		1
-45	152-31666	•ANGLE - FUSELAGE STA 123 PILOT DECK ATT		1
	152-31420-1	•INTERCOSTAL ASSY - FUSELAGE STA 123 TO 133 DECK PORT SIDE		1
	152-31420-2	•INTERCOSTAL ASSY - FUSELAGE STA 123 TO 133 DECK STBD SIDE		1
-46	152-31420-3	••HAT - (DECK INTERCOSTAL PORT SIDE)		1
	152-31420-4	••HAT - (DECK INTERCOSTAL STARBOARD SIDE)		1
-47	152-31420-5	••CHANNEL - (DECK INTERCOSTAL)		1
	152-31810	••SUPPORT - CANOPY CROSS-BEAM TRACK		1
	152-31422	••SPACER - UPPER DECK CANTED FUS STA 118		1
	152-31873	••FAIRLEAD - CANOPY OUTER EMERGENCY RELEASE CABLE BP 5-7/16 (PORT SIDE ONLY)		1
-48	152-31874	••FAIRLEAD - CANOPY OUTER EMERGENCY RELEASE CABLE BP 6-15/16 (PORT SIDE ONLY)		1
-49	2C7	••CLIP - (NAA)(STBD SIDE)		1
-50	152-31895	•SUPPORT ASSY - CANOPY REL MECH BELL-CRANK	001-210	1
	152-31895-10	•SUPPORT ASSY - CANOPY REL MECH BELL-CRANK	001-370	1
	152-31895-3	••HAT - CANOPY REL MECH BELL-CRANK SUPPORT	371-	1
	152-31895-9	••HAT - CANOPY REL MECH BELL-CRANK SUPPORT	001-370	1
	152-31895-5	••PLATE - CANOPY REL MECH BELL-CRANK BRG	371-	1
	152-31895-7	••ANGLE - CANOPY REL MECH BELL-CRANK BRG		1
	2C7	••CLIP - (NAA)		1
-51	172-31151-13	•ANGLE - FUSELAGE STA 133 TO 145 DECK	001-210	1
-52	152-31834	•SUPPORT - FUSELAGE STA 133 TO 145 CANOPY EJECTION GUN		1
-53	152-31423	•CHANNEL - FUSELAGE STA 145 TO 156 DECK		1
-54	170-31437-1	•INTERCOSTAL ASSY - FUSELAGE STA 156 TO 166 UPPER DECK PORT SIDE		1
	170-31437-2	•INTERCOSTAL ASSY - FUSELAGE STA 156 TO 166 UPPER DECK STARBOARD SIDE		1
	151-54083-10	•PAN ASSY - CANOPY OPEN LIMIT SWITCH (ELEC)		1
-55	151-54083-5	••PAN - CANOPY OPEN LIMIT SWITCH (ELEC)		1
-56	140-54008	••PANEL ASSY - ELECTRICAL CONNECTOR PRESS.		1
	140-54008-3	•••DISC - ELECTRICAL CONNECTOR PRESS. PANEL		1
	AN515PB6R20	•••SCREW -		2
	2W1AL9-10-32	•••WASHER - PLAIN (NAA)		4
	2W1SR9-10-32	•••WASHER - PLAIN (NAA)		2
	AN935B6L	•••WASHER -		2
	AN341-6	•••NUT -		2
	151-54010	••GASKET - ELECTRICAL CONN PRESSURE PANEL		1
	AN515-6R8	••SCREW -		2
	AN960-6	••WASHER -		2
-57	152-31138-300	BULKHEAD ASSY - FUSELAGE STA 118 CANTED (SEE FIG. 55)		REF
-58	13A-32035	BULKHEAD ASSY - FUSELAGE STA 178 UPPER (SEE FIG. 60)		REF

(CONTINUED SEE FIG. 38)

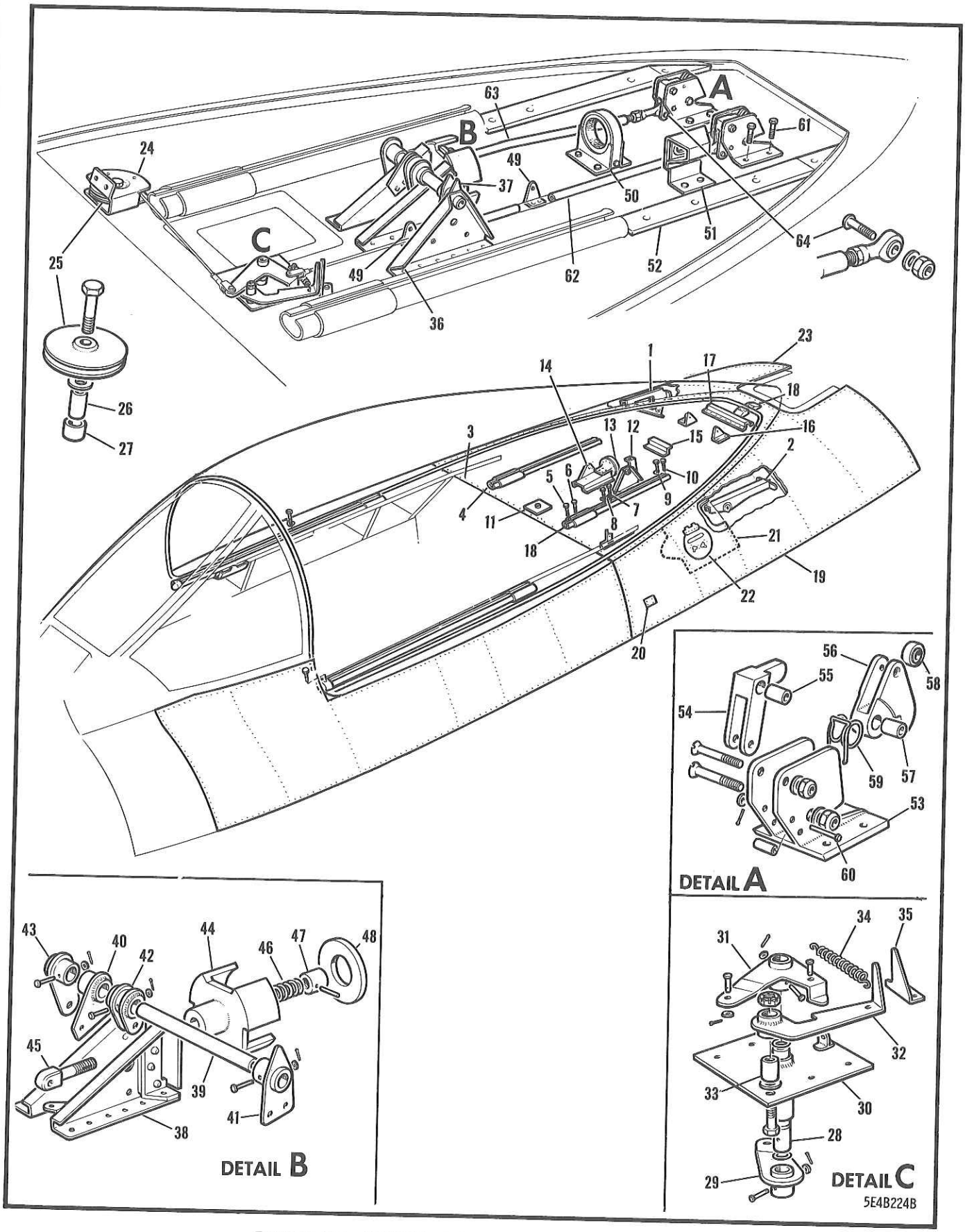

FIGURE 38 COCKPIT DECK & CANOPY MECHANISM

FIGURE AND INDEX NUMBER	GROUP FUSELAGE MAJOR ASSEMBLY COCKPIT DECK & CANOPY MECHANISM PART NUMBER	1234567 NOMENCLATURE	CODE	UNITS PER ASSY
38 -	172-31151-35	DECK & WINDSHIELD ASSY - FUSELAGE STA 53-178 (SEE FIG. 37)		REF
- 1	151-52405-5	•BRACKET ASSY - PILOT RUDDER CONTROL FUSELAGE STA 165		1
- 2	151-33610	•BRACKET ASSY - LANDING GEAR EMY RELEASE FUS STA 147 PULLEY		1
- 3	172-31422	•WEB ASSY - FUSELAGE STA 123-166 DECK	001-210	1
	172-31422-800	•WEB ASSY - FUSELAGE STA 123-166 DECK	211-370	1
	172-31422-805	•WEB ASSY - FUSELAGE STA 123-166 DECK	371-	1
	172-31422-3	••WEB - FUSELAGE STA 123-166 DECK	001-210	1
	172-31422-950	••WEB - FUSELAGE STA 123-166 DECK	211-370	1
	172-31422-953	••WEB - FUSELAGE STA 123-166 DECK	371-	1
	AN3-3A	••BOLT -	431-	1
	AN970-3	••WASHER -	431-	2
	AN365-1032	••NUT -	431-	1
	172-31422-5	••DOUBLER - FUSELAGE STA 144-157 DECK WEB		1
	172-31422-7	••ANGLE - FUSELAGE STA 144 WEB	001-210	1
	172-31422-17	••ANGLE - FUSELAGE STA 144 WEB	211-	1
- 4	152-31893	•TRACK ASSY - CANOPY INTERMEDIATE		2
	172-31893	•RISER - COCKPIT FUS STA 146 CANOPY TRACK	001-210	2
- 5	NAS222-30	•SCREW -		2
	2W1AL17-20-64	•WASHER - PLAIN (NAA)		2
	2W1AL17-20-40	•WASHER - PLAIN (NAA)		2
	4S4-8-27	•SPACER - RIVET (NAA)		2
	AN960-416	•WASHER -		2
	AN365-428	•NUT -		6
- 6	NAS335A10	•BOLT -		6
	2W1AL22-20-64	•WASHER - PLAIN (NAA)		6
	AN960-516	•WASHER -		6
	AN365-524	•NUT -		6
- 7	NAS335A10	•BOLT -		4
- 8	151-31425-11	•WASHER - CANOPY SLIDING TRACK (INTER)		4
	2W10-5	•WASHER - COUNTERSUNK (NAA)		4
	AN960-516L	•WASHER -		4
	AN365-524	•NUT -		2
- 9	151-31425-15	•WASHER - CANOPY FWD SLIDING TRACK (INTER)		2
-10	NAS335A11	•BOLT -		2
	151-31425-17	•WASHER - CANOPY FORWARD SLIDING TRACK (INTERMEDIATE REAR)		3
	2W10-5	•WASHER - COUNTERSUNK (NAA)		1
	2W1AL-20-20-40	•WASHER - PLAIN (NAA) (STARBOARD SIDE REAR)		4
	AN960-516	•WASHER -		4
	AN365-524	•NUT -		1
-11	152-31870	•BEARING ASSY - CANOPY RELEASE MECH BELCRK	001-210	1
	152-31870-800	•BEARING ASSY - CANOPY RELEASE MECH BELCRK	211-370	1
	152-31870-3	••PLATE - CANOPY RELEASE MECH BELL-CRANK	001-210	1
	152-31870-950	••PLATE - CANOPY RELEASE MECH BELL-CRANK	211-370	1
-12	152-31841-20	•BRACKET ASSY - CANOPY RELEASE MECHANISM TORQUE SHAFT	001-370	1
	AN3-4	••BOLT -	001-370	1
	2W1-14-14-20	••WASHER - PLAIN (NAA)	001-370	3
	AN365-1032	••NUT -	001-370	1
	152-31841-9	••ANGLE - CANOPY RELEASE MECHANISM TORQUE SHAFT BRACKET	001-370	1
	AN509-10R9	••SCREW -	001-370	2
	AN960-10L	••WASHER -	001-370	2
	AN365-1032	••NUT -	001-370	2
	152-31839-801	•BRACKET ASSY - CANOPY REMOVER GUN ATT		1
	152-31839-803	••GUARD - POSITION INDICATOR		1
-13	152-31840	••BASE ASSY - CANOPY REMOVER GUN ATTACHING	001-370	1

FIGURE AND INDEX NUMBER	GROUP FUSELAGE MAJOR ASSEMBLY COCKPIT DECK & CANOPY MECHANISM PART NUMBER	1234567 NOMENCLATURE	CODE	UNITS PER ASSY
38 -	AN4-6A	••BOLT -	001-370	4
	AN365-428	••NUT -	001-370	4
-14	152-31839-11	••PLATE - CANOPY REMOVER ATTACHING BRACKET	001-370	1
	AN515-6R6	••SCREW -	001-370	2
	AN365-632	••NUT -	001-370	2
	AN42-3A	••BOLT -	001-370	1
	AN960D10	••WASHER -	001-370	1
	AN365-1032	••NUT -	001-370	1
	151-31850	••DECALCOMANIA - COCKPIT CANOPY RELEASE MECHANISM LOCK	001-370	1
	AN3-4A	•BOLT -		2
	AN960D10	•WASHER -		2
	AN365-1032	•NUT -		2
	152-318127	•CLIP - CANOPY REMOVER SPRING	001-370	1
-15	152-31842	•CLIP - CANOPY REMOVER GUN REAR SUPPORT	001-370	1
-16	170-31837-1	•BRACKET - COCKPIT CANOPY GEAR-BOX LATCH PORT SIDE	001-370	1
	170-31837-2	•BRACKET - COCKPIT CANOPY GEAR-BOX LATCH STARBOARD SIDE	001-370	1
	170-31426-1	•ANGLE - INTERCOSTAL ATT FUS STA 155 PORT (MAKE FROM 1E28 X 1-1/2 (NAA))		1
	170-31426-2	•ANGLE - INTERCOSTAL ATT FUS STA 155 STBD (MAKE FROM 1E28 X 1-1/2 (NAA))		1
	AN5-10A	•BOLT -		2
	AN5-7A	•BOLT -		2
	AN960C516L	•WASHER -		4
-17	151-31813	•SUPPORT ASSY - CANOPY GEAR-BOX		1
	AN3-5A	•BOLT -		4
	AN960D10	•WASHER -		4
-18	172-31805	•GUIDE - COCKPIT ENCL FUS STA 162 CANOPY		2
	NAS220-13	•SCREW -		4
	AN960D8	•WASHER -		4
	AN365-832	•NUT -		4
-19	172-31151-5	•SKIN - DECK & WINDSHIELD STA 125-178 PORT SIDE		1
-20	140-31269	•DOOR ASSY - FUSELAGE STA 124 FORWARD HOIST		2
	140-31269-11	••HINGE - FUSELAGE FORWARD HOIST DOOR (MAKE FROM NAS40-3A-TT2)		1
	140-31269-12	••HINGE - FUSELAGE FORWARD HOIST DOOR (MAKE FROM NAS40-3A-LL2)		1
	140-31271	••SPRING - FUSELAGE STA 124 FORWARD HOIST DOOR CLOSING		1
	140-31269-9	••HINGE-PIN - FUS STA 124 FWD HOIST DOOR		1
	151-31400	•RETAINER - FUS STA 124 FWD HOIST DOOR SPG		2
	172-31151-25	•DECK & WINDSHIELD ASSY - FUSELAGE STA 130-145 WELL		1
-21	152-31411	••WELL ASSY - CANOPY OUTER EMY REL HANDLE		1
-22	140-31848	•DOOR ASSY - CANOPY EMY REL OUTER HANDLE	001-100	1
	140-31848-10	•DOOR ASSY - CANOPY EMY REL OUTER HANDLE	101-	1
	140-31848-7	••HINGE - CANOPY EMERGENCY REL HANDLE DOOR (MAKE FROM NAS40-4A-TT30)		1
	140-31848-5	••HINGE - CANOPY EMERGENCY REL HANDLE DOOR (MAKE FROM NAS40-2A-LL30)		1
	140-31848-9	••HINGE-PIN - CANOPY EMY REL HANDLE DOOR		1
	140-31848-11	••PLATE - HINGE REINFORCING	101-	1
	H5000-064-064	••LATCH ASSY - FLUSH (HAS)		1
-23	172-31151-6	•SKIN - DECK & WINDSHIELD STA 125-178 STARBOARD SIDE		1
-24	176-31894	•BRACKET - COCKPIT ENCL REL CABLE PULLEY	371-	1
	AN3-12A	•BOLT -	371-	1

FIGURE AND INDEX NUMBER	GROUP FUSELAGE MAJOR ASSEMBLY COCKPIT DECK & CANOPY MECHANISM PART NUMBER	1234567 NOMENCLATURE	CODE	UNITS PER ASSY
38 -25	AN210-3B	•PULLEY -	371-	1
	AN960D10	•WASHER - (UNDER PULLEY)	371-	1
-26	152-318102-10	•BUSHING - CANOPY RELEASE MECHANISM PULLEY	371-	1
-27	152-318101-10	•SPACER - CANOPY RELEASE MECHANISM PULLEY	371-	2
	NAS427T12	•PIN -	371-	1
-28	176-31877	•SHAFT - COCKPIT ENCLOSURE FUS STA 126 CANOPY RELEASE MECHANISM BELL-CRANK (FOR LOWER CODE SEE FIG. 68)		
-29	152-31878-10	•BELL-CRANK ASSY - CANOPY RELEASE MECH LWR	371-	1
-30	191-31870	•BEARING ASSY - COCKPIT ENCL CANOPY RELEASE MECHANISM BELL-CRANK FUS STA 126	371-	1
	AN622B5	•PACKING -	371-	2
-31	176-31889	•BELL-CRANK ASSY - COCKPIT ENCL FUS STA 126 CANOPY EJECTION LOCK	371-	1
	AN392-17	•PIN -	371-	2
	AN960D4	•WASHER -	371-	2
	AN393-7	•PIN -	371-	2
	AN960D10L	•WASHER -	371-	2
	AN380-2-2	•COTTER-PIN -	371-	2
-32	176-31890	•LOCK ASSY - COCKPIT ENCL FUSELAGE STA 126 CANOPY EJECTION	371-	1
-33	4B21B4-021	•BUSHING - SPACER (NAA)	371-	1
	AN4-12	•BOLT -	371-	1
	AN960D416L	•WASHER -	371-	1
	AN320-4	•NUT -	371-	1
	AN380-2-2	•COTTER-PIN -	371-	1
-34	142-68019	•SPRING - IGNITER WIRE PLUG ACCESS DOOR	371-	1
	AN42-3A	•BOLT -	371-	1
	AN960D10L	•WASHER -	371-	1
	AN365-1032	•NUT -	371-	1
-35	176-31891	•INDICATOR - COCKPIT ENCL FUSELAGE STA 126 CANOPY EJECTION LOCK	371-	1
	176-31897	•BRACKET ASSY - COCKPIT ENCL CANOPY RELEASE MECHANISM TORQUE SHAFT	371-	1
-36	176-31897-3	••BRACKET - CANOPY REL MECH TORQUE SHAFT	371-	1
-37	176-31832	••MARKER - COCKPIT ENCL FUS STA 136 CANOPY EJECTION RELEASE MECHANISM LOCK	371-	1
	AN515-6R5	••SCREW -	371-	1
	AN960D6	••WASHER -	371-	1
	AN365-632	••NUT -	371-	1
	176-31880-20	•SUPPORT ASSY - COCKPIT ENCL FUS STA 136 CANOPY EJECTION GUN	371-	1
-38	176-31870-21	••BRACKET ASSY - COCKPIT ENCL FUS STA 136 CANOPY EJECTION GUN PORT SIDE	371-	1
	176-31870-22	••BRACKET ASSY - COCKPIT ENCL FUS STA 136 CANOPY EJECTION GUN STARBOARD SIDE	371-	1
-39	176-31874	••SHAFT - COCKPIT ENCL FUS STA 136 CANOPY EJECTION BELCRK	371-	1
-40	176-31879	••BEARING - COCKPIT ENCL FUS STA 136 CANOPY EJECTION RELEASE BELL-CRANK	371-691	1
41	176-31876	••BELL-CRANK ASSY - COCKPIT ENCLOSURE FUS STA 136 CANOPY EJ LATCH PORT SIDE	692-	1
	176-31876-801	••BELL-CRANK ASSY - COCKPIT ENCLOSURE FUS STA 136 CANOPY EJ LATCH PORT SIDE	692-	1
	176-31876-803	•••GUARD - COCKPIT ENCLOSURE FUS STA 136 EJECTION LATCH PORT SIDE	692-	2
	NAS221-11	•••SCREW -	692-	2
	AN960D10	•••WASHER -	692-	2
	AN365-1032	•••NUT -	371-	1
-42	176-31893-10	••BELL-CRANK ASSY - COCKPIT ENCLOSURE FUS STA 136 CANOPY EJECTION LATCH		

FIGURE AND INDEX NUMBER	GROUP FUSELAGE MAJOR ASSEMBLY COCKPIT DECK & CANOPY MECHANISM PART NUMBER	1234567 NOMENCLATURE	CODE	UNITS PER ASSY
38 -43	176-31875	••BELL-CRANK ASSY - COCKPIT ENCL FUSELAGE STA 136 CANOPY EJ LATCH STBD SIDE	371-	1
	AN393-23	••PIN -	371-	3
	AN960D10L	••WASHER -	371-	3
	AN380-2-2	••COTTER-PIN -	371-	3
-44	176-31871-10	••CASE ASSY - COCKPIT ENCL FUSELAGE STA 136 CANOPY EJECTION GUN SUPPORT	371-	1
	176-31871-5	•••CASE - CANOPY EJECTION GUN SUPPORT	371-	1
	4B20B12-028	•••BUSHING - FLANGED PRESS-FIT (NAA)	371-	1
	AN509-10R13	••SCREW -	371-	4
	2W8-10	••WASHER - DRAIN (NAA)	371-	4
	AN365-1032	••NUT -	371-	4
-45	176-31886	••LINK - COCKPIT ENCL CANOPY EJ LATCH REL	371-	1
	AN960D716L	••WASHER -	371-	6
	AN393-21	••PIN -	371-	1
	AN960D10L	••WASHER -	371-	1
	AN380-2-2	••COTTER-PIN -	371-	1
-46	176-31860	••SPRING - COMPRESSION	371-	1
-47	176-31885	••COLLAR - COCKPIT ENCL FUS STA 136 CANOPY EJECTION LATCH REL	371-	1
	176-31887	••PIN - COCKPIT ENCL FUS STA 136 CANOPY EJECTION LATCH REL	371-	1
-48	176-31873	••PAD - COCKPIT ENCL FUS STA 136 CANOPY EJECTION SUP. CASE	371-	1
	AN3-5A	•BOLT -	371-	2
	AN960D10L	•WASHER -	371-	2
	AN365-1032	•NUT -	371-	2
-49	172-31151-29	•CLIP - DECK & WINDSHIELD FUSELAGE STA 144	371-	2
-50	176-31895	•CLAMP ASSY - COCKPIT ENCLOSURE FUS STA 144 CANOPY EJECTION REMOVER	371-	1
	176-31830	••BASE - COCKPIT ENCL FUS STA 150 CANOPY EJECTION REMOVER	371-	1
	176-31895-3	••STRAP - CANOPY EJECTION REMOVER CLAMP	371-	1
	176-31895-5	••PAD - CANOPY EJECTION REMOVER CLAMP	371-	1
	176-31895-7	••PAD - CANOPY EJECTION REMOVER CLAMP	371-	1
	AN3-27A	••BOLT -	371-	1
	AN960D10	••WASHER -	371-	1
	AN365-1032	••NUT -	371-	1
-51	176-31837	•SUPPORT ASSY - COCKPIT ENCLOSURE CANOPY RELEASE EXACTOR	371-	1
-52	176-31864-3	•RAMP - COCKPIT ENCL FUS STA 148 CANOPY INTER TRUCK PORT SIDE	371-	1
	176-31864-5	•RAMP - COCKPIT ENCL FUS STA 148 CANOPY INTER TRUCK STARBOARD SIDE	371-	1
	176-31888-1	•LATCH ASSY - COCKPIT ENCL FUSELAGE STA 156 CANOPY EJECTION PORT SIDE	371-	1
	176-31888-2	•LATCH ASSY - COCKPIT ENCL FUSELAGE STA 156 CANOPY EJECTION STARBOARD SIDE	371-	1
-53	176-31872-1	••BRACKET - COCKPIT ENCL FUS STA 156 CANOPY EJECTION LATCH PORT SIDE	371-	1
	176-31872-2	••BRACKET - COCKPIT ENCL FUS STA 156 CANOPY EJECTION LATCH STARBOARD SIDE	371-	1
-54	176-31884	••CAM - COCKPIT ENCL FUS STA 156 CANOPY EJECTION LATCH	371-	1
	AN509-10R21	••SCREW -	371-	1
-55	4B21S3-020	••SPACER - BUSHING (NAA)	371-	1
	AN960D10	••WASHER -	371-	1
	AN365-1032	••NUT -	371-	1
-56	176-31883	••LATCH - COCKPIT ENCL FUSELAGE STA 156 CANOPY EJECTION	371-	1

FIGURE AND INDEX NUMBER	GROUP FUSELAGE MAJOR ASSEMBLY COCKPIT DECK & CANOPY MECHANISM PART NUMBER	1234567 NOMENCLATURE	CODE	UNITS PER ASSY
38 -	AN509-516R22	••SCREW -	371-	1
-57	4B21S5-020	••SPACER - BUSHING (NAA)	371-	1
	AN960D516	••WASHER -	371-	1
	AN365-524	••NUT -	371-	1
-58	3NBF512YJ	••NEEDLE-BEARING - AIRCRAFT (TOR)	371-	1
-59	176-31826	••SPRING - COCKPIT ENCL CANOPY RELEASE MECH	371-	1
	NAS42DD3-40	••SPACER -	371-	1
-60	AN392-27	••PIN -	371-	1
	2W18-4L	••WASHER - PLAIN (NAA)	371-	1
	AN380-2-1	••COTTER-PIN -	371-	2
	AN3-7A	•BOLT -	371-	2
	AN960D10L	•WASHER -	371-	2
-61	AN5-10A	•BOLT -	371-	2
	AN5-12A	•BOLT -	371-	4
	AN960D516L	•WASHER -	371-	1
-62	176-31882	•ROD ASSY - COCKPIT ENCL FUS STA 156 CANOPY INTERMEDIATE LATCH PORT SIDE	371-	1
-63	176-31881	•ROD ASSY - COCKPIT ENCL FUS STA 156 CANOPY EJECTION LATCH STARBOARD SIDE	371-	1
	176-31882-3	••ROD - CANOPY EJECTION LATCH PORT SIDE	371-	1
	176-31881-3	••ROD - CANOPY EJECTION LATCH STBD SIDE	371-	1
	176-31831	••CLEVIS - COCKPIT ENCL FUS STA 156 CANOPY EJECTION MECHANISM ROD	371-	1
	1R11-8-049-428	••ROD-END - KNURLED THREADED (NAA)	371-	1
	AN316-4R	••CHECK-NUT -	371-	1
	HF-4	••ROD-END - UNIBAL SPHERICAL (HEC)	371-	2
-64	AN24-13A	•BOLT -	371-	2
	AN960D416	•WASHER -	371-	2
	AN364-428	•NUT -	371-	2
	AN393-11	•PIN -	371-	2
	AN960D10L	•WASHER -	371-	2
	AN380-2-2	•COTTER-PIN -	371-	2
		(CONTINUED SEE FIG. 38A)		

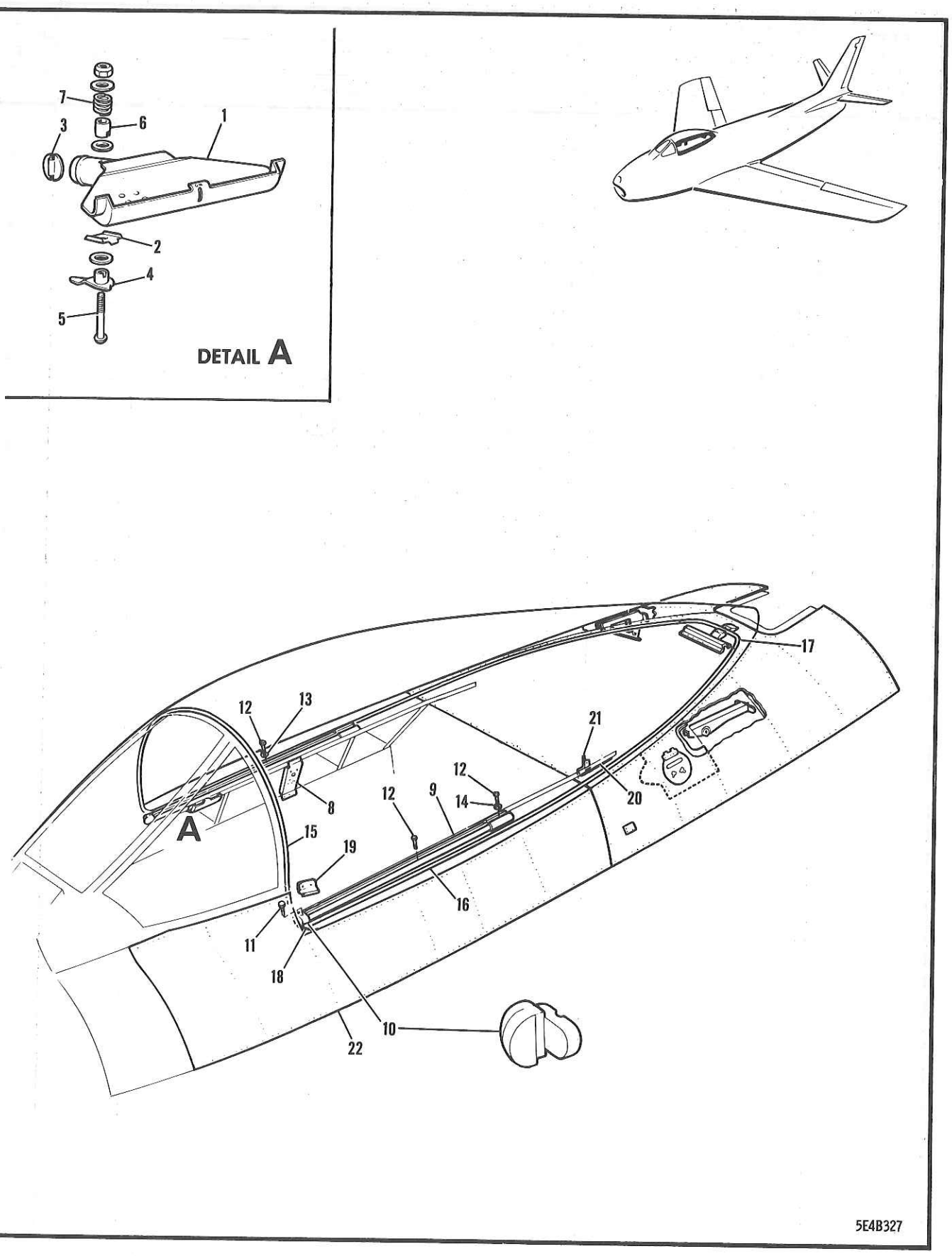

FIGURE 38A COCKPIT WINDSHIELD STRUCTURE & COVER

FIGURE AND INDEX NUMBER	GROUP FUSELAGE MAJOR ASSEMBLY COCKPIT WINDSHIELD STRUCTURE & COVER PART NUMBER	1234567 NOMENCLATURE	CODE	UNITS PER ASSY
38A-	172-31151-35	DECK & WINDSHIELD ASSY - FUSELAGE STA 53-178 (SEE FIG. 37)		REF
	152-53528-51	•OUTLET ASSY - HEAT & VENT SYSTEM CANOPY DEFROSTER VALVE		1
	152-53528-29	••OUTLET ASSY - HEAT & VENT SYSTEM CANOPY DEFROSTER VALVE		1
- 1	152-53520	•••TUBE - HEAT & VENT SYS CANOPY D/FR VALVE		1
- 2	152-53521	•••FITTING - HEAT & VENT SYSTEM CANOPY DEFROSTER VALVE		1
- 3	152-53524	••BUTTERFLY - HEAT & VENT SYSTEM CANOPY DEFROSTER VALVE		1
- 4	152-53527	••ARM ASSY - HEAT & VENT SYSTEM CANOPY DEFROSTER VALVE		1
	170-54084-3	••BRACKET - COCKPIT AN3034-3 LIGHT MOUNTING		1
- 5	AN515-8-27	••SCREW -		1
- 6	152-53525-5	••HUB - HEAT & VENT SYS CANOPY D/FR VALVE	001-210	1
	AN960-516L	••WASHER -		2
- 7	152-53522	••SPRING - HEAT & VENT SYSTEM AIR VALVE	001-210	1
	AN960-616L	••WASHER -		1
	AN364D832	••NUT -		1
- 8	13-50060	•PANEL ASSY - FUSELAGE STA 104-107 TYPE N9 CAMERA SELECTOR SWITCH ELECTRICAL		1
	13-50060-3	••PANEL - TYPE N9 CAMERA SELECTOR SWITCH		1
	13-50060-5	••PIN - TYPE N9 CAMERA SELECTOR SWITCH		2
	13-50060-7	••DECALCOMANIA - TYPE N9 CAMERA SEL SWITCH	001-100	1
	13-50060-9	••DECALCOMANIA - TYPE N9 CAMERA SEL SWITCH	001-100	1
- 9	152-31805-11	•TRACK ASSY - SLIDING CANOPY FWD PORT SIDE		1
	152-31805-12	•TRACK ASSY - SLIDING CANOPY FWD STBD SIDE		1
-10	151-31832-11	•SUPPORT - CANOPY FWD TRACK ATT PORT SIDE		1
	151-31832-12	•SUPPORT - CANOPY FWD TRACK ATT STBD SIDE		1
-11	NAS222-28	•SCREW -		2
	4S4-8-27	•SPACER - RIVET (NAA)		2
	170-31841-3	•WASHER - COCKPIT CANOPY FWD SLIDING TRACK		2
-12	NAS206-13	•SCREW -		28
	170-31841-5	•WASHER - COCKPIT CANOPY FWD SLIDING TRACK (PORT SIDE)		2
-13	170-31841-7	•WASHER - COCKPIT CANOPY FWD SLIDING TRACK (STARBOARD SIDE)		1
	170-31841-9	•WASHER - COCKPIT CANOPY FWD SLIDING TR (STARBOARD SIDE)		1
	172-31151-27	•SHIM - CANOPY FORWARD SLIDING TRACK		4
-14	170-31841-11	•WASHER - COCKPIT CANOPY FWD SLIDING TRACK (PORT SIDE)		2
	170-31841-13	•WASHER - COCKPIT CANOPY FWD SLIDING TRACK (STARBOARD SIDE)		2
-15	151-31833-10	•SEAL ASSY - COCKPIT ENCLOSURE INFLATABLE		1
-16	172-31804-1	•RETAINER - COCKPIT ENCL FUS STA 82-160 CANOPY SEAL PORT SIDE		1
	172-31804-2	•RETAINER - COCKPIT ENCL FUS STA 82-160 CANOPY SEAL STARBOARD SIDE		1
-17	172-31803	•RETAINER - COCKPIT ENCLOSURE FUS STA 162 CANOPY SEAL		1
-18	151-31888-1	•SUPPORT - WINDSHIELD BOW COCKPIT ENCLOSURE PRESSURE SEAL PORT SIDE		1
	151-31888-2	•SUPPORT - WINDSHIELD BOW COCKPIT ENCLOSURE PRESSURE SEAL STARBOARD SIDE		1
	AN530-6R6	•SCREW -		2
-19	172-31151-21	•RETAINER - DECK & WINDSHIELD FUSELAGE STA 80 PORT SIDE		1
	172-31151-22	•RETAINER - DECK & WINDSHIELD FUSELAGE STA 80 STARBOARD SIDE		1

FIGURE AND INDEX NUMBER	GROUP FUSELAGE MAJOR ASSEMBLY COCKPIT WINDSHIELD STRUCTURE & COVER PART NUMBER	1234567 NOMENCLATURE	CODE	UNITS PER ASSY
38A-	PK79XZ-6-6	•SCREW - PHILLIPS RECESSED TYPE Z SHEET METAL (PKC)		4
-20	152-31428-1	•ANGLE - FUSELAGE STA 120-133 DECK PORT		1
	152-31428-2	•ANGLE - FUSELAGE STA 120-133 DECK STBD		1
-21	172-54075	•BRACKET - HEAT & VENT SYSTEM COCKPIT ENCL DEFROST SWITCH		1
	172-53344	•PAN - HEAT & VENT SYSTEM PRESSURE SWITCH	001-210	1
-22	172-31151-3	•SKIN - DECK & WINDSHIELD STA 62-125 PORT SIDE		1
	172-31151-4	•SKIN - DECK & WINDSHIELD STA 62-125 STARBOARD SIDE		1
		-000-		

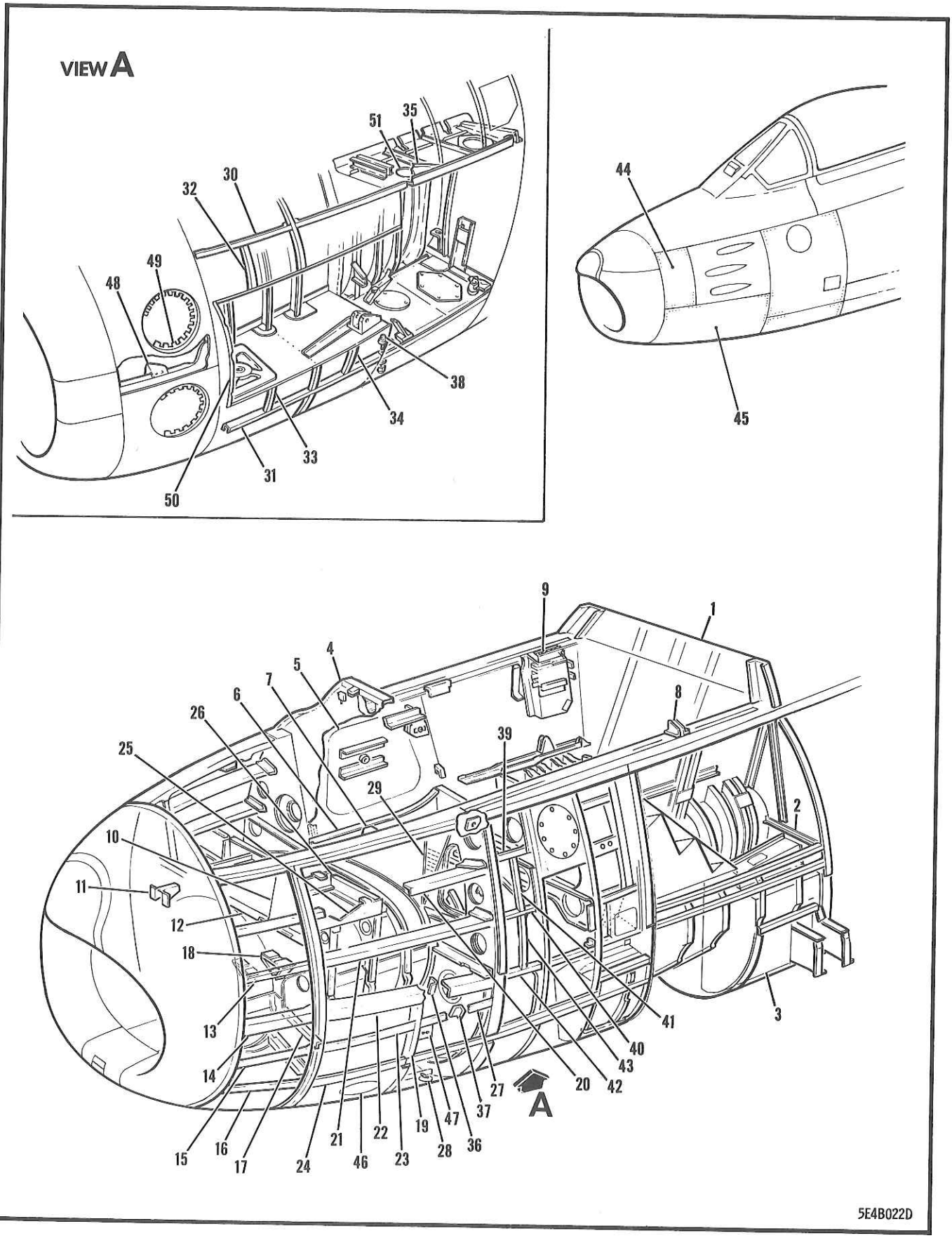

FIGURE 39 NOSE FUSELAGE STA 0-63

FIGURE AND INDEX NUMBER	GROUP FUSELAGE MAJOR ASSEMBLY NOSE FUSELAGE STA 0-63 PART NUMBER	1234567 NOMENCLATURE	CODE	UNITS PER ASSY
39 -	151-31731-806	FUSELAGE ASSY - NOSE SECTION STA 0-126 (SEE FIG. 36)	001-100	1
	151-31731-810	FUSELAGE ASSY - NOSE SECTION STA 0-126	101-200	1
	151-31731-818	FUSELAGE ASSY - NOSE SECTION STA 0-126	201-210	1
	151-31731-814	FUSELAGE ASSY - NOSE SECTION STA 0-126	211-300	1
	151-31731-816	FUSELAGE ASSY - NOSE SECTION STA 0-126	301-370	1
	151-31731-817	FUSELAGE ASSY - NOSE SECTION STA 0-126	371-	1
- 1	170-31132-801	.FUSELAGE ASSY - STA 84 TO CANTED STA 127 (SEE FIG. 51)		REF
- 2	151-31730-802	.FRAME ASSY - LOWER FUSELAGE STA 0-126 (SEE FIG. 42)		REF
- 3	151-61074	.LINER INSTL - .50 CALIBRE CASE & LINK EJ COMPARTMENT (SEE SECTION 20)		REF
- 4	172-31118	.FRAME ASSY - UPPER FUSELAGE STA 53 (SEE FIG. 41)		REF
- 5	176-31147-1	.WEB ASSY - FUSELAGE STA 54-81 PORT SIDE COCKPIT PRESSURE (SEE FIG. 39A)		REF
	176-31147-2	.WEB ASSY - FUSELAGE STA 54-81 STBD SIDE COCKPIT PRESSURE (SEE FIG. 39A)		REF
	172-31107-141	.LONGERON ASSY - FUS STA 15-131 UP. MAIN PORT SIDE	001-210	1
	172-31107-803	.LONGERON ASSY - FUSELAGE STA 15-131 UPPER MAIN PORT SIDE	211-370	1
	172-31107-801	.LONGERON ASSY - FUSELAGE STA 15-131 UPPER MAIN PORT SIDE	371-	1
	172-31107-132	.LONGERON ASSY - FUS STA 15-131 UP. MAIN STARBOARD SIDE	001-370	1
	172-31107-802	.LONGERON ASSY - FUSELAGE STA 15-131 UPPER MAIN STARBOARD SIDE	371-	1
- 6	172-31107-101	..LONGERON ASSY - FUS STA 15-131 UPPER MAIN PORT SIDE	001-370	1
	172-31107-901	..LONGERON ASSY - FUS STA 15-131 UPPER MAIN PORT SIDE	371-	1
	172-31107-102	..LONGERON ASSY - FUS STA 15-131 UPPER MAIN STARBOARD SIDE	001-370	1
	172-31107-902	..LONGERON ASSY - FUS STA 15-131 UPPER MAIN STARBOARD SIDE	371-	1
- 7	170-74034-1	..FITTING - AN/APG30 RADAR XMTR UPPER LONGN ATT FUS STA 37 PORT SIDE		1
	170-74034-2	..FITTING - AN/APG30 RADAR XMTR UPPER LONGN ATT FUS STA 37 STARBOARD SIDE		1
	AN509-10R13	..SCREW - (RADAR XMTR FITTING FWD ATT)		1
	AN509-10R16	..SCREW - (RADAR XMTR FITTING REAR ATT)		1
	AN960D10	..WASHER -		2
	AN365-1032	..NUT -		2
	172-31107-951	..STRIP - FUSELAGE STA 49 RUBBING	371-	1
	172-31107-59	..ANGLE - FUS STA 81-94 UPPER LONGN (PORT)		1
	172-31107-109	..CLIP - FUSELAGE STA 96 PORT (DECK ATT)		1
	172-31107-29	..CLIP - FUSELAGE STA 96 PORT (DECK ATT)		1
	172-31107-30	..CLIP - FUSELAGE STA 96 STBD (DECK ATT)		1
	172-31107-68	..CLIP - FUSELAGE STA 96 STBD (DECK ATT)		1
	AN3-4A	..BOLT - (PORT SIDE)		3
	AN3-4A	..BOLT - (STARBOARD SIDE)		2
	AN960D10L	..WASHER -		5
	AN365-1032	..NUT -		5
	170-68753	..CLIP - EMERGENCY JETTISON CABLE GUARD TUBE SUPPORT REAR (PORT SIDE STA 96)	001-210	1
- 8	151-53563-3	..BRACKET - HEAT & VENT SYS CTR WINDSHIELD DE-ICING SOV SUP. (FUS STA 99 PORT)		1
	151-53563-4	..BRACKET - HEAT & VENT SYS CTR WINDSHIELD DE-ICING SOV SUP. (FUS STA 98 PORT)		1

FIGURE AND INDEX NUMBER	GROUP FUSELAGE MAJOR ASSEMBLY NOSE FUSELAGE STA 0-63 PART NUMBER	1234567 NOMENCLATURE	CODE	UNITS PER ASSY
39 -	172-31107-27	••CLIP - FUSELAGE STA 104 PORT (DECK ATT)		1
	172-31107-79	••CLIP - FUSELAGE STA 104 PORT (DECK ATT)		1
	172-31107-80	••CLIP - FUSELAGE STA 104 STBD (DECK ATT)		1
	AN3-4A	••BOLT - (PORT SIDE)		3
	AN3-4A	••BOLT - (STARBOARD SIDE)		2
	AN3-5A	••BOLT - (STARBOARD SIDE)		1
	AN960D10L	••WASHER -		6
	AN365-1032	••NUT -		6
	172-31107-83	••ANGLE - FUSELAGE STA 105-112 PORT SIDE		1
	NAS221-9	••SCREW - (ANGLE ATTACHING)		2
	AN960-10L	••WASHER -		2
- 9	172-31107-72	••HINGE - FUSELAGE STA 108-111 (STBD SIDE) (CIRCUIT-BREAKER PANEL) (MAKE FROM AN251HXCO-500)		1
	172-31107-74	••SHIM - FUS STA 108-112 UP•LONGERON (STBD)		1
	172-31107-77	••CLIP - FUSELAGE STA 113 PORT (DECK ATT)		1
	172-31107-78	••CLIP - FUSELAGE STA 113 STBD (DECK ATT)		1
	AN3-4A	••BOLT - (CLIP ATTACHING)		6
	AN960D10L	••WASHER -		6
-10	151-31114-101	•FRAME ASSY - FUSELAGE SIDE STA 27 PORT		1
	151-31114-202	•FRAME ASSY - FUSELAGE SIDE STA 27 STBD		1
	151-31114-41	••WEB - PORT SIDE FRAME STA 27		1
	151-31114-52	••WEB - STARBOARD SIDE FRAME STA 27		1
	151-31114-47	••DOUBLER - FRAME (STARBOARD SIDE)		1
	170-31469	••SUPPORT - GUN PORT DOOR CHANNEL (STBD)		1
	2C33	••CLIP - (NAA) (PITOT LINE SUPPORTING)		2
	NAS220-7	••SCREW - (CLIP ATTACHING)		2
	AN960D8L	••WASHER -		2
	AN365-832	••NUT -		2
-11	170-54035-10	•BRACKET ASSY - ELECTRICAL RELAY PANEL ATT	001-100	1
	170-54035-5	••BRACKET - ELECTRICAL RELAY PNL ATTACHING	001-100	1
	170-54035-105	•BRACKET - ELECTRICAL RELAY PANEL ATTACHING	101-	1
-12	151-31731-61	•ANGLE - FUS STA 15-27 NOSE SECTION PORT		1
	151-31731-62	•ANGLE - FUS STA 15-27 NOSE SECTION STBD		1
-13	151-31731-63	•ANGLE - FUS STA 15-27 NOSE SECTION PORT		1
	151-31731-64	•ANGLE - FUS STA 15-27 NOSE SECTION STBD		1
-14	151-31731-65	•ANGLE - FUS STA 15-27 NOSE SECTION PORT		1
	151-31731-66	•ANGLE - FUS STA 15-27 NOSE SECTION STBD		1
-15	151-31731-105	•ANGLE - FUS STA 15-27 NOSE SECTION PORT		1
	151-31731-106	•ANGLE - FUS STA 15-27 NOSE SECTION STBD		1
	151-31731-121	•CLIP - (ANGLE TO FRAME ATT STA 27 PORT)		1
	151-31731-122	•CLIP - (ANGLE TO FRAME ATT STA 27 STBD)		1
-16	151-31123-1	•LONGERON - FUS STA 15-27 PORT LOWER MAIN		1
	151-31123-2	•LONGERON - FUS STA 15-27 STBD LOWER MAIN		1
-17	151-31465-1	•ANGLE - FUSELAGE STA 27 UPPER & LOWER SPLICING PORT SIDE		1
	151-31465-2	•ANGLE - FUSELAGE STA 27 UPPER & LOWER SPLICING STARBOARD SIDE		1
-18	170-74025	•SUPPORT ASSY - VOLTAGE RGLR FUS STA 27 (PORT SIDE)		1
	151-31731-11	•CLIP - FUSELAGE STA 27 PORT SIDE (OXY TANK SUP•) (MAKE FROM AND10134-2603 X 2)		1
	151-31731-12	•CLIP - FUSELAGE STA 27 STBD SIDE (OXY TANK SUP•) (MAKE FROM AND10134-2003 X 2)		1
	AN3-6A	•BOLT - (CLIP ATTACHING)		2
	AN365-1032	•NUT -		2
	151-31731-13	•CLIP - FUSELAGE STA 27 (OXYGEN TANK SUP•) (MAKE FROM AND10134-1601 X 2)		2
	AN3-5A	•BOLT - (CLIP ATTACHING)		2
	AN365-1032	•NUT -		2

FIGURE AND INDEX NUMBER	GROUP FUSELAGE MAJOR ASSEMBLY NOSE FUSELAGE STA 0-63 PART NUMBER	1234567 NOMENCLATURE	CODE	UNITS PER ASSY
39 -19	151-31455-1	•FRAME - FUSELAGE INTER SIDE STA 41 PORT		1
	151-31455-2	•FRAME - FUSELAGE INTER SIDE STA 41 STBD		1
-20	151-31459-3	•INTERCOSTAL - UPPER FUS STA 27-53 PORT		1
	151-31459-4	•INTERCOSTAL - UPPER FUS STA 27-53 STBD		1
	AN3-4A	•BOLT - (INTERCOSTAL ATTACHING)		8
	AN960-10	•WASHER -		12
	AN365-1032	•NUT -		8
-21	151-31460-1	•INTERCOSTAL - INTER FUS STA 27-53 PORT		1
	151-31460-2	•INTERCOSTAL - INTER FUS STA 27-53 STBD		1
	AN3-4A	•BOLT - (INTERCOSTAL ATTACHING)		8
	AN960-10	•WASHER -		12
	AN365-1032	•NUT -		8
-22	151-31461-1	•INTERCOSTAL ASSY - LOWER FUS STA 27-53 PORT SIDE		1
	151-31461-2	•INTERCOSTAL ASSY - LOWER FUS STA 27-53 STARBOARD SIDE		1
-23	151-31731-107	•ANGLE - FUSELAGE STA 27-41 NOSE SECTION LH (MAKE FROM AND10133-0702 X 14-7/8)		1
	151-31731-108	•ANGLE - FUSELAGE STA 27-41 NOSE SECTION RH (MAKE FROM AND10133-0702 X 14-7/8)		1
	151-31731-113	•CLIP - (ANGLE TO FRAME ATT STA 27 PORT)		1
	151-31731-114	•CLIP - (ANGLE TO FRAME ATT STA 27 STBD)		1
	151-31731-115	•CLIP - (ANGLE TO FRAME ATT STA 41 PORT)		1
	151-31731-116	•CLIP - (ANGLE TO FRAME ATT STA 41 STBD)		1
-24	151-31108-1	•LONGERON ASSY - FUS STA 27-131 LWR MAIN LH		1
	151-31108-2	•LONGERON ASSY - FUS STA 27-131 LWR MAIN RH		1
	170-3113-1	•SPOUT - UPPER EQUIPMENT ACCESS DOOR DRAIN FUSELAGE STA 53 PORT SIDE		1
	170-31131-10	•SPOUT - UPPER EQUIPMENT ACCESS DOOR DRAIN FUSELAGE STA 53 STARBOARD SIDE		1
-25	170-74027-1	•SUPPORT ASSY - TYPE A GUNSIGHT AMPL (LH)		1
-26	170-74028	•INTERCOSTAL - TYPE A GUNSIGHT AMPLIFIER SUPPORT (PORT)		1
	AN515-8R7	•SCREW - (SUPPORT ATTACHING)	073-	4
	AN960D8L	•WASHER -	073-	5
	AN365-832	•NUT -	073-	1
-27	151-31731-109	•ANGLE - FUSELAGE STA 41-53 NOSE SECTION PORT SIDE (MAKE FROM AND10133-0702 X 12)		1
	151-31731-110	•ANGLE - FUSELAGE STA 41-53 NOSE SECTION STBD SIDE (MAKE FROM AND10133-0702 X 12)		1
	151-31731-111	•CLIP - (ANGLE TO FRAME ATT STA 41 PORT)		1
	151-31731-112	•CLIP - (ANGLE TO FRAME ATT STA 41 STBD)		1
	151-31731-117	•SHIM - (BETWEEN ANGLE & FRAME STA 53)		2
-28	140-54037	•TUBE ASSY - BATTERY VENT DRAIN		1
-29	151-52402-1	•BRACKET - PILOT RUDDER BALANCE CABLE LH		1
	151-52402-2	•BRACKET - PILOT RUDDER BALANCE CABLE RH		1
-30	151-31462	•STRINGER ASSY - FUS STA 27-85 LOWER PORT	001-210	1
	151-31462-7	•STRINGER ASSY - FUS STA 27-85 LOWER PORT	211-	1
-31	151-31611-30	•ANGLE ASSY - FUS STA 27-85 N/WHL BEAM STBD		1
	151-31731-43	•SHIM - (BETWEEN STRINGER & SKIN)		2
-32	151-31731-29	•ANGLE - FUSELAGE STA 35 LOWER PORT SIDE		1
-33	151-31731-31	•ANGLE - FUSELAGE STA 35 LOWER STBD SIDE		1
-34	151-31731-33	•ANGLE - FUSELAGE STA 47 LOWER STBD SIDE		1
-35	151-31638	•DOUBLER - FUSELAGE STA 53 NOSE WHEEL DOOR HINGE REINFORCING		1
	AN509-10-9	•SCREW - (DOUBLER TO STRINGER ATTACHING)	001-490	6
	AN509-10R9	•SCREW - (DOUBLER TO STRINGER ATTACHING)	491-	4
	AN509-10R8	•SCREW - (DOUBLER TO STRINGER ATTACHING)	491-	2

FIGURE AND INDEX NUMBER	GROUP FUSELAGE MAJOR ASSEMBLY NOSE FUSELAGE STA 0-63 PART NUMBER	1234567 NOMENCLATURE	CODE	UNITS PER ASSY
39 -	AN960-10	•WASHER -		6
	AN365-1032	•NUT -	001-490	6
	AN365-1032	•NUT -	491-	4
	AN364-1032	•NUT -	491-	2
	2C33	•CLIP - (NAA) (ELECTRICAL WIRE BUNDLE)		1
	AN520-8R5	•SCREW -		1
	AN365-832	•NUT -		1
-36	151-31731-15	•CLIP - FUSELAGE STA 53 (OXYGEN LINE SUP•) (MAKE FROM 1E122 X 2-1/4 (NAA))		2
	AN3-6A	•BOLT - (CLIP ATTACHING)		2
	AN960-10	•WASHER -		2
	AN365-1032	•NUT -		2
-37	151-31731-17	•CLIP - FUSELAGE STA 53 (OXYGEN LINE SUP•) (MAKE FROM 78E X 2-5/16 (NAA))		2
	AN3-5A	•BOLT - (CLIP ATTACHING)		2
	AN365-1032	•NUT -		2
	161-54127	•PANEL ASSY - ELECTRICAL PRESS• DISCONNECT FUSELAGE STA 57		1
	151-31463	•SUPPORT - ACTUATING CYL FUS STA 42-53 STBD		1
	170-61031	•BRACKET ASSY - NOSE GUN PNEU CHARGER AIR BOTTLE FILLER VALVE (STARBOARD SIDE)		1
	170-61032	•BRACKET ASSY - •50 CALIBRE NOSE GUN PNEU CHARGER PRESSURE GAUGE (STBD SIDE)		1
-38	AN42-4A	•EYE-BOLT -		1
	AN960D10	•WASHER -		1
	AN365-1032	•NUT -		1
-39	151-31731-129	•ANGLE - FUS STA 53-63 NOSE SECTION PORT		1
	151-31731-130	•ANGLE - FUS STA 53-63 NOSE SECTION STBD		1
-40	151-31731-127	•ANGLE - FUS STA 53-63 NOSE SECTION PORT		1
	151-31731-128	•ANGLE - FUS STA 53-63 NOSE SECTION STBD		1
-41	151-31731-955	•ANGLE - FUS STA 58 NOSE SECTION PORT		1
	151-31731-956	•ANGLE - FUS STA 58 NOSE SECTION STARBOARD		1
-42	151-31731-57	•ANGLE - FUS STA 53-63 NOSE SECTION PORT		1
	151-31731-58	•ANGLE - FUS STA 53-63 NOSE SECTION STBD		1
-43	151-31731-957	•ANGLE - FUS STA 58 NOSE SECTION PORT		1
	151-31731-958	•ANGLE - FUS STA 58 NOSE SECTION STARBOARD		1
-44	151-31731-7	•SKIN - FUSELAGE NOSE PORT SIDE		1
	151-31731-8	•SKIN - FUSELAGE NOSE STARBOARD SIDE		1
-45	151-31731-173	•SKIN - FUSELAGE NOSE PORT SIDE		1
	151-31731-168	•SKIN - FUSELAGE NOSE STARBOARD SIDE		1
	151-31444-11	•DOUBLER - FUSELAGE STA 15-27 LDG/GR LIGHT CUT-OUT REINFORCING PORT SIDE		1
	151-31444-12	•DOUBLER - FUSELAGE STA 15-27 LDG/GR LIGHT CUT-OUT REINFORCING STARBOARD SIDE		1
	151-31731-133	•DOUBLER - FUSELAGE STA 15-27		1
	151-31731-97	•DOUBLER ASSY - FUS STA 30-38 NOSE PORT		1
	151-31731-98	•DOUBLER ASSY - FUS STA 30-38 NOSE STBD		1
	151-31731-93	••DOUBLER - FUS STA 30-38 NOSE SECTION PORT		1
	151-31731-94	••DOUBLER - FUS STA 30-38 NOSE SECTION STBD		1
-46	151-31731-95	•DOOR - NOSE FUSELAGE STA 34 PORT SIDE		1
	151-31731-96	•DOOR - NOSE FUSELAGE STA 34 STARBOARD SIDE		1
	AN509-10-8	•SCREW - (DOOR ATTACHING)		16
	151-31731-139	•DOUBLER - FUSELAGE STA 42-47 (PORT SIDE)		1
-47	3F2-4	•FITTING - BULKHEAD UNION (NAA) (PORT SIDE)		2
	151-31731-133	•DOUBLER - FUSELAGE NOSE STA 15-28		1
-48	13-50061	•BRACKET - TYPE N9 CAMERA MOUNTING		1
-49	161-54115-1	•BRACKET - ELECTRICAL LANDING LIGHT PORT		1
	161-54115-2	•BRACKET - ELECTRICAL LANDING LIGHT STBD		1
-50	151-31731-45	•STRIP - FUSELAGE STA 28 (N/WHL STRUT DOOR)		1
-51	151-31640	•COVER - DOOR HINGE-PIN ACC FUS STA 59 PORT		1
	NAS220-8	•SCREW - (COVER ATTACHING)		4
		(CONTINUED SEE FIG• 40)		

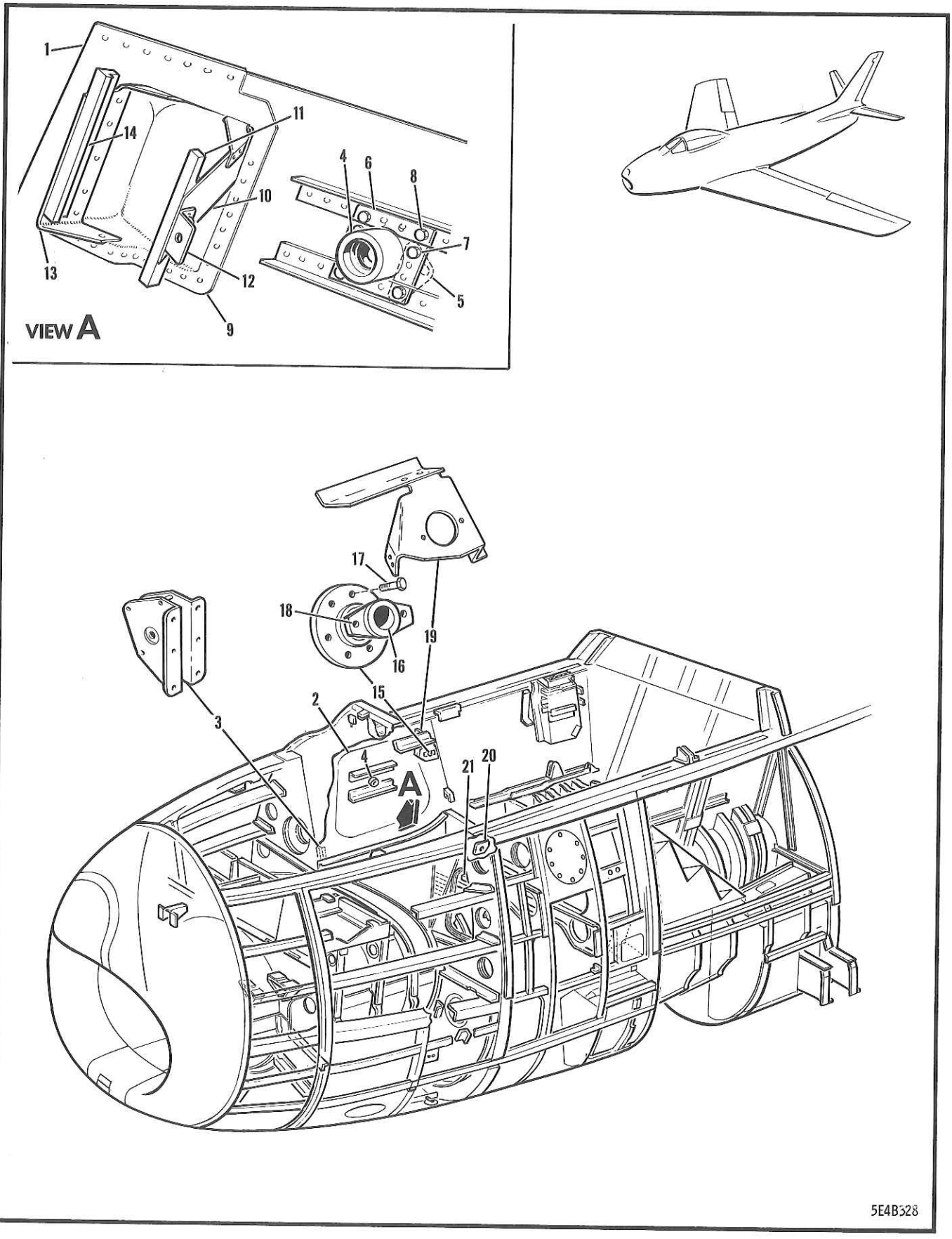

FIGURE 39A COCKPIT PRESSURE WEB

FIGURE AND INDEX NUMBER	GROUP / MAJOR ASSEMBLY / PART NUMBER	FUSELAGE / COCKPIT PRESSURE WEB / 1234567 NOMENCLATURE	CODE	UNITS PER ASSY
39A-	176-31147-1	WEB ASSY - FUSELAGE STA 54-81 PORT SIDE COCKPIT PRESSURE (SEE FIG. 39)		1
	176-31147-2	WEB ASSY - FUSELAGE STA 54-81 STBD SIDE COCKPIT PRESSURE (SEE FIG. 39)	001-210	1
	176-31147-800	WEB ASSY - FUSELAGE STA 54-81 STBD SIDE COCKPIT PRESSURE	211-	1
- 1	176-31147-3	•WEB - FUS STA 54-81 COCKPIT PORT PRESSURE		1
- 2	176-31147-4	•WEB - FUS STA 54-81 COCKPIT STBD PRESSURE	001-210	1
	176-31147-950	•WEB - FUS STA 54-81 COCKPIT STBD PRESSURE	211-	1
	AN515-8R7	•SCREW - (TO PLUG HOLE AFTER JETT BRKT REM)	211-	1
	2W1AL11-24-040	•WASHER - PLAIN (NAA)	211-	1
	AN364-832	•NUT -	211-	1
- 3	151-33605	•BRACKET ASSY - NOSE GEAR EMERGENCY REL WHEEL DOOR LOCK UPPER PULLEY (STBD)		1
	151-58320-10	•SUPPORT ASSY - HYDRAULIC MASTER BRAKE CYLINDER TORQUE SHAFT		2
- 4	151-58320-5	••SUPPORT - MASTER BRAKE CYL TORQUE SHAFT		1
	AN201KP10A	••BEARING -		2
- 5	161-58173-1	•CLIP - HYDRAULIC MASTER BRAKE CYLINDER OUTBOARD RIGGING PORT SIDE		1
	161-58173-2	•CLIP - HYDRAULIC MASTER BRAKE CYLINDER OUTBOARD RIGGING STARBOARD SIDE		1
- 6	161-58172	•STOP - HYDRAULIC MASTER BRAKE CYLINDER OUTBOARD BELL-CRANK		2
	AN3-6A	•BOLT - (STOP & SUPPORT & CLIP ATTACHING)		4
- 7	AN3-5A	•BOLT - (CLIP & SUPPORT ATTACHING)		1
- 8	AN3-4A	•BOLT - (SUPPORT ATTACHING)		1
	2W1V12-12-32	•WASHER - PLAIN (NAA)		6
	AN365-1032	•NUT -		6
- 9	176-31149	•PAN ASSY - FUSELAGE STA 78 PRESSURE WEB OXYGEN REGULATOR (PORT SIDE)		1
	176-73326	•BRACKET ASSY - FUSELAGE STA 78 OXYGEN REGULATOR FORWARD (PORT SIDE)	001-100	1
	176-73326-800	•BRACKET ASSY - FUSELAGE STA 78 OXYGEN REGULATOR FORWARD (PORT SIDE)	101-	1
-10	176-73326-3	••FRAME - FUSELAGE STA 78 OXYGEN REGULATOR FORWARD BRACKET (PORT SIDE)		1
-11	176-73326-5	••STRIP - FUSELAGE STA 78 OXYGEN REGULATOR FORWARD BRACKET (PORT SIDE)	001-100	1
	13A-72001	••ANGLE ASSY - OXYGEN REGULATOR MOUNT(PORT)	101-	1
-12	176-73326-7	••CLIP - OXYGEN REGULATOR BRACKET (PORT)		1
	176-73327	•BRACKET ASSY - FUSELAGE STA 78 OXYGEN REGULATOR REAR (PORT SIDE)		1
-13	176-73327-3	••FRAME - OXYGEN REGULATOR BRACKET		1
-14	176-73327-5	••STRIP - OXYGEN REGULATOR BRACKET		1
	172-52061	•SUPPORT ASSY - SURFACE CONTROL MANUAL EMERGENCY CHANGE-OVER (STBD SIDE)	001-210	1
-15	172-52061-3	••HOUSING - MANUAL EMERGENCY CH/OV SUPPORT	001-210	1
	B4600F5/8	••SEAL - (SLC) (TYPE MM)	001-210	1
-16	AN201KP10A	••BEARING -	001-210	1
	AN201PK8A	••BEARING -	001-210	1
-17	AN3-6A	•BOLT - (EMERGENCY CHANGE-OVER ATTACHING)	001-210	6
	AN960D10	•WASHER -	001-210	12
	AN365-1032	•NUT -	001-210	6
-18	AN3-5A	•BOLT -	001-210	2
	AN365-1032	•NUT -	001-210	2
-19	172-52067	•BRACKET ASSY - SURFACE CTL MANUAL CH/OV HANDLE (STBD) (CANOPY EMERGENCY REL) (REWORK AS PER EO 05-5E-6B/11)	001-210	1
-20	151-58234	•BEARING - HYDRAULIC PARKING BRAKE VALVE TORQUE TUBE SUPPORT (PORT SIDE)		1

FIGURE AND INDEX NUMBER	GROUP FUSELAGE MAJOR ASSEMBLY COCKPIT PRESSURE WEB PART NUMBER	1234567 NOMENCLATURE	CODE	UNITS PER ASSY
39A-21	151-58228	•BRACKET ASSY - HYDRAULIC PARKING BRAKE VALVE SUPPORT (PORT SIDE)		1
	AN515-8R7	•SCREW - (TO PLUG HOLE IN WEB AFTER PITOT ELBOW REMOVED AS PER EO 05-5E-6A/76)	001-370	1
	AN960-10L	•WASHER -	001-370	1
	2W1AL-11-24-40	•WASHER - FLAT (NAA)	001-370	2
	AN365-832	•NUT -	001-370	1
		-000-		

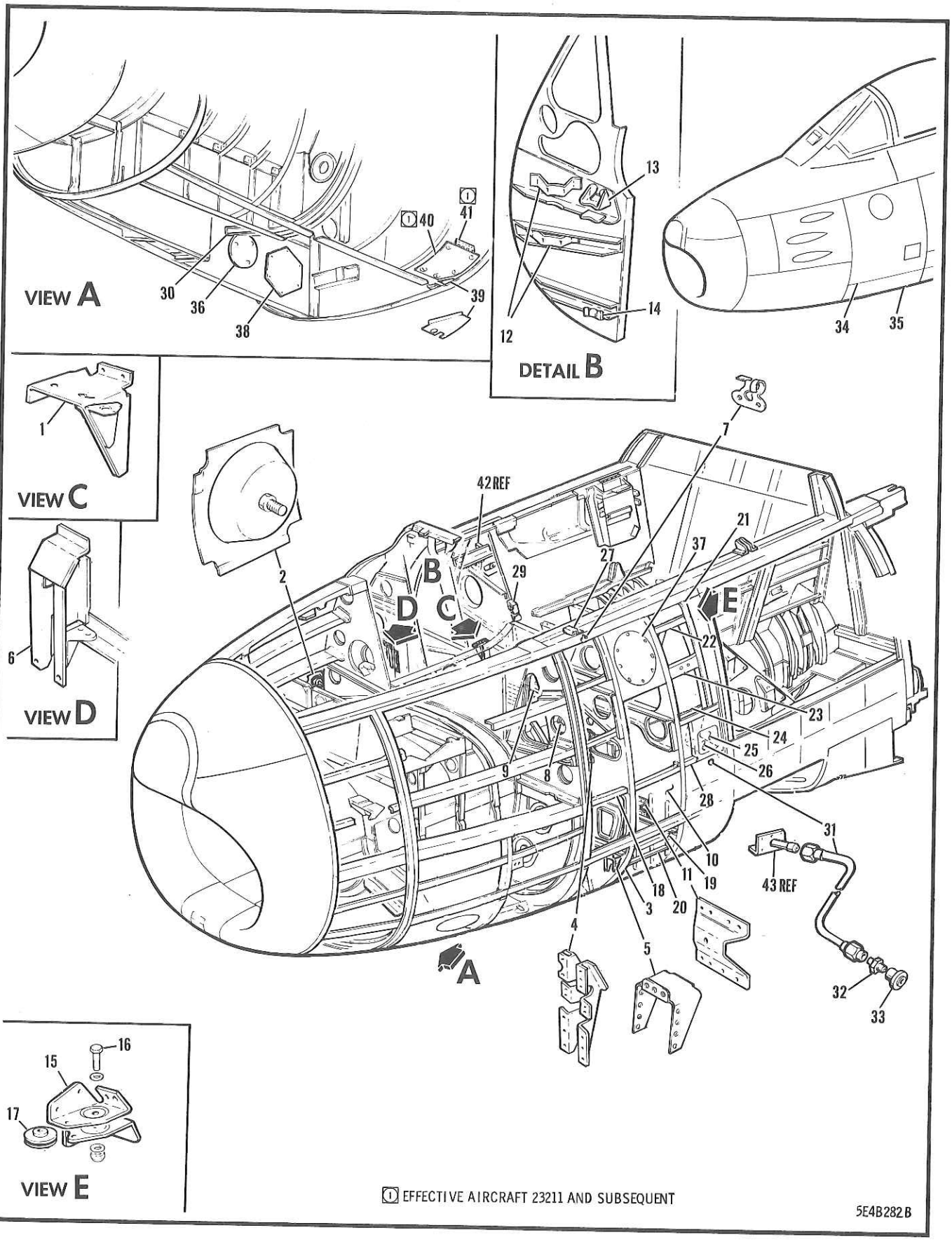

FIGURE 40 NOSE FUSELAGE STA 63-126

FIGURE AND INDEX NUMBER	GROUP FUSELAGE MAJOR ASSEMBLY NOSE FUSELAGE STA 63-126 PART NUMBER	1234567 NOMENCLATURE	CODE	UNITS PER ASSY
40 -	151-31731-806	FUSELAGE ASSY - NOSE SECTION STA 0-126 (SEE FIG. 39)		REF
- 1	172-52071	•BRACKET ASSY - SURFACE CTL MANUAL CH/OV CABLE FORWARD FUSELAGE SUPPORT (STA 78 STARBOARD SIDE)	001-210	1
- 2	172-73326	•SUPPORT ASSY - OXYGEN FILLER VALVE (STA 52-62 STARBOARD SIDE)		1
	172-73326-3	••SUPPORT - OXYGEN FILLER VALVE (STBD SIDE)		1
	172-73326-5	••RING - OXYGEN FILLER VALVE (STBD SIDE)		1
	140-73308	••NAME-PLATE - OXYGEN FILLER VALVE		1
	99833-P.130	••RECEPTACLE - AIRLOC FASTENER STUD (MKM)		2
	2C28	••CLIP - BALL CHAIN ATTACHING (NAA)		1
	AN3-5A	•BOLT -		2
	AN365-1032	•NUT -		2
- 3	151-31120-121	•FRAME ASSY - FUSELAGE SIDE STA 63 PORT		1
	151-31120-102	•FRAME ASSY - FUSELAGE SIDE STA 63 STBD		1
	151-31120-119	••WEB - FUSELAGE SIDE STA 63 PORT SIDE		1
	151-31120-110	••WEB - FUSELAGE SIDE STA 63 STBD SIDE		1
	151-31120-21	••ANGLE - FUSELAGE SIDE FRAME STA 63 PORT		1
	151-31120-37	••ANGLE - FUSELAGE SIDE FRAME STA 63 STBD		1
	151-31441	••FITTING - FUSELAGE STA 63 CHANNEL SUPPORT OUTBOARD STARBOARD SIDE		1
	151-31433	••FITTING - FUSELAGE STA 63 CHANNEL SUPPORT OUTBOARD PORT SIDE		1
- 4	161-58106-1	••BRACKET ASSY - HYDRAULIC MASTER BRAKE CYLINDER SUPPORT PORT SIDE		1
	161-58106-2	••BRACKET ASSY - HYDRAULIC MASTER BRAKE CYLINDER SUPPORT STARBOARD SIDE		1
- 5	172-54013	••SUPPORT ASSY - ELECTRICAL TYPE C2 FLASHER FUS STA 63 (PORT SIDE)		1
- 6	170-61026	••BRACKET ASSY - .50 CALIBRE NOSE GUN PNEU CHARGER COMPRESSOR SUP. (STBD SIDE)		1
	NAS204-8	•SCREW - (PORT SIDE)		1
	AN960C8	•WASHER - (PORT SIDE)		1
	AN365-832	•NUT - (PORT SIDE)		1
- 7	161-58123-1	•BRACKET - HYDRAULIC BRAKE SPRING ADJ PORT		1
	161-58123-2	•BRACKET - HYDRAULIC BRAKE SPRING ADJ STBD		1
	152-31484-1	•ANGLE - FRAME TO PRESSURE WEB FUSELAGE STA 63 PORT SIDE		1
	152-31484-2	•ANGLE - FRAME TO PRESSURE WEB FUSELAGE STA 63 STARBOARD SIDE		1
	AN3-4A	•BOLT - (STARBOARD SIDE)		8
	2W1V13-12-32	•WASHER - PLAIN (NAA) (STARBOARD SIDE)		8
	AN365-1032	•NUT - (STARBOARD SIDE)		8
- 8	151-31443-1	•FITTING - UPPER DUCT ATT FUS STA 63 PORT		1
	151-31443-2	•FITTING - UPPER DUCT ATT FUS STA 63 STBD		1
	AN4-10A	•BOLT -		4
	AN960-416L	•WASHER -		4
	AN365-428	•NUT -		4
	152-31159-1	•GUSSET - FRAME TO PRESSURE WEB ATTACHING FUSELAGE STA 63 PORT SIDE		1
	152-31159-2	•GUSSET - FRAME TO PRESSURE WEB ATTACHING FUSELAGE STA 63 STARBOARD SIDE		1
	152-31139-1	•ANGLE - SIDE STIFFENING FUS STA 63 PORT		1
	152-31139-2	•ANGLE - SIDE STIFFENING FUS STA 63 STBD		1
	151-31731-19	•ANGLE - FUSELAGE STA 63 (CHAN SUP. PORT)		1
- 9	151-31439	•FITTING - CHANNEL SUPPORT FUS STA 63 PORT		1
	AN4-7A	•BOLT - (FITTING ATT PORT SIDE)		1
	AN960-416L	•WASHER -		1
	AN365-428	•NUT -		1

FIGURE AND INDEX NUMBER	GROUP FUSELAGE MAJOR ASSEMBLY NOSE FUSELAGE STA 63-126 PART NUMBER	1234567 NOMENCLATURE	CODE	UNITS PER ASSY
40 -	151-31442-10	•SUPPORT ASSY - FUSELAGE STA 63 DUCT CHANNEL STARBOARD SIDE		1
	151-31442-3	••CHANNEL - DUCT SUPPORTING STARBOARD SIDE		1
	151-31440	••FITTING - CHANNEL SUPPORT FUS STA 63 STBD		1
	AN4-10A	•BOLT - (SUPPORT ATT STARBOARD SIDE)		2
	AN960-416	•WASHER -		2
	AN365-428	•NUT -		2
	AN3-5	•BOLT - (ANGLE ATT STARBOARD SIDE)		2
	AN960D10	•WASHER -		2
	AN365-1032	•NUT -		2
	AN3-5A	•BOLT - (FRAME TO LONGERON ATT PORT SIDE)		1
	AN4-7A	•BOLT - (FRAME TO LONGERON ATT STBD SIDE)		1
	AN960-416	•WASHER - (STARBOARD SIDE)		1
	AN365-1032	•NUT - (PORT SIDE)		1
	AN365-428	•NUT - (STARBOARD SIDE)		1
-10	151-31111-71	•FRAME ASSY - FUSELAGE STA 71 PORT SIDE		1
	151-31111-52	•FRAME ASSY - FUSELAGE STA 71 STBD SIDE		1
	151-31111-49	••WEB - FUS SIDE FRAME STA 71 PORT SIDE		1
	151-31111-26	••WEB - FUS SIDE FRAME STA 71 STBD SIDE		1
	151-31111-17	••ANGLE - FUS SIDE FRAME STA 71 PORT SIDE		1
	151-31111-40	••ANGLE - FUS SIDE FRAME STA 71 STBD SIDE		1
-11	172-54014	••SUPPORT ASSY - ELECTRICAL TYPE C2 FLASHER FUS STA 72 (PORT SIDE)		1
-12	170-61025	••BRACKET - FUSELAGE GUN CHARGER AIR BOTTLE (STARBOARD SIDE)		2
-13	172-58104	••BRACKET - HYDRAULIC EMY NOSE GEAR ACCUM FUS STA 72 UPPER (STARBOARD SIDE)		1
-14	172-58103	••BRACKET - HYDRAULIC EMY NOSE GEAR ACCUM FUS STA 72 LOWER (STARBOARD SIDE)		1
	170-68729	•BRACKET ASSY - EMERGENCY JETT PUL STA 72	001-210	1
-15	170-68729-7	••BRACKET ASSY - EMERGENCY JETTISON PULLEY	001-210	1
-16	AN3-7A	••BOLT -	001-210	1
	AN960D10	••WASHER -	001-210	2
-17	AN210-1B	••PULLEY -	001-210	1
	AN365-1032	••NUT -	001-210	1
-18	151-31731-59	•ANGLE - FUSELAGE STA 63-72 NOSE SECTION LH		1
	151-31731-60	•ANGLE - FUSELAGE STA 63-72 NOSE SECTION RH		1
-19	172-51069	•SUPPORT ASSY - FUSELAGE STA 63-72 FUEL FLOWMETER AMPL (PORT SIDE)	001-210	1
-20	172-54012	•ANGLE ASSY - ELECTRICAL TYPE C2 FLASHER FUS STA 63-72 SUP. (PORT SIDE)		1
	176-68738	•DOUBLER - CABLE SEAL EMERGENCY JETTISON (STA 72 PORT SIDE)	001-210	1
-21	172-31125-11	•FRAME ASSY - FUSELAGE STA 81 PORT SIDE		1
	172-31125-2	•FRAME ASSY - FUSELAGE STA 81 STBD SIDE		1
-22	151-31731-137	•ANGLE - NOSE SECTION FUS STA 72-81 PORT		1
	151-31731-138	•ANGLE - NOSE SECTION FUS STA 72-81 STBD		1
-23	140-54168	•CHANNEL ASSY - EXTERIOR CANOPY CTL SWITCH		2
	151-31483-1	•KICK-STEP ASSY - PILOT ACC FUS STA 79 PORT	001-370	1
	151-31483-801	•KICK-STEP ASSY - PILOT ACC FUS STA 79 STBD	371-	1
	151-31483-2	•KICK-STEP ASSY - PILOT ACC FUS STA 79 STBD	001-370	1
	151-31483-802	•KICK-STEP ASSY - PILOT ACC FUS STA 79 STBD	371-	1
-24	151-31483-5	••CHANNEL - PILOT ACCESS KICK-STEP PORT		1
	151-31483-6	••CHANNEL - PILOT ACCESS KICK-STEP STBD		1
	151-31482-1	••DOUBLER - FUSELAGE KICK-STEP REINF PORT	001-370	1
	151-31482-951	••DOUBLER - FUSELAGE KICK-STEP REINF PORT	371-	1
	151-31482-2	••DOUBLER - FUSELAGE KICK-STEP REINF STBD	001-370	1
	151-31482-952	••DOUBLER - FUSELAGE KICK-STEP REINF STBD	371-	1
	134-31427-9	••DOOR ASSY - FUS UPPER STEP COMPLETE PORT		1
	134-31427-10	••DOOR ASSY - FUS UPPER STEP COMPLETE STBD		1

FIGURE AND INDEX NUMBER	GROUP FUSELAGE MAJOR ASSEMBLY NOSE FUSELAGE STA 63-126 PART NUMBER	1234567 NOMENCLATURE	CODE	UNITS PER ASSY
40 -25	134-31424-1	•••DOOR ASSY - FUSELAGE UPPER STEP PORT		1
	134-31424-2	•••DOOR ASSY - FUSELAGE UPPER STEP STBD		1
	134-31441	••••PIVOT - FUSELAGE STEP HINGE		2
	134-31421	•••HINGE - FUSELAGE STEP		1
	134-31423	•••SPRING - FUSELAGE STEP		1
	4S4D4-21	•••SPACER - RIVET (NAA)		2
	134-31427-5	•••HINGE-PIN -		1
	AN960D4L	•••WASHER -		2
	AN381-1-6	•••COTTER-PIN -		2
-26	151-31481-1	•WELL ASSY - FUSELAGE STA 79 KICK-STEP PORT		1
	151-31481-2	•WELL ASSY - FUSELAGE STA 79 KICK-STEP STBD		1
	152-31486-1	•CHANNEL - FRAME TO PRESSURE WEB ATTACHING FUSELAGE STA 72 PORT SIDE		1
	152-31486-2	•CHANNEL - FRAME TO PRESSURE WEB ATTACHING FUSELAGE STA 72 STARBOARD SIDE		1
	AN3-4A	•BOLT -		4
	2W1V13-12-32	•WASHER - PLAIN (NAA)		4
	AN365-1032	•NUT -		4
-27	151-53494	•CLIP - ANTI-ICING HEATER SUPPORTING	001-300	1
-28	151-31731-27	•ANGLE - FUSELAGE STA 72-84 LH		1
	151-31731-28	•ANGLE - FUSELAGE STA 72-84 RH		1
-29	161-54036	•BRACKET - ELECTRICAL CONDUIT (STA 81 PORT)	001-210	1
	13B-53011	•BRACKET - ELECTRICAL CONDUIT (STA 81 PORT)	211-	1
-30	140-34567	•FITTING - N/GR WHEEL DOOR LOCK BUNGEE SUP• (STARBOARD SIDE)		1
	AN3-21A	•BOLT -		1
	AN960-10	•WASHER -		1
	AN365-1032	•NUT -		1
-31	MS28741-6-0176	•HOSE ASSY - DETACHABLE END FITTING MEDIUM PRESSURE (AS PER EO 05-5E-6A/140)	001-490	2
	3H3-6-0160	•HOSE ASSY - PLASTIC COVERED (NAA) (COCKPIT DRAIN LINE)	491-	2
32	AN816-6D	•NIPPLE -		2
-33	172-31855	•PLUG ASSY - FUS STA 78 COCKPIT DRAIN OUT•		2
	13B-31010	••PLUG - COCKPIT DRAIN (AS PER EO 05-5E-6A/112)		1
-34	151-31731-143	•SKIN - FUSELAGE NOSE PORT SIDE	001-370	1
	151-31731-963	•SKIN - FUSELAGE NOSE PORT SIDE	371-	1
	151-31731-144	•SKIN - FUSELAGE NOSE STARBOARD SIDE	001-370	1
	151-31731-964	•SKIN - FUSELAGE NOSE STARBOARD SIDE	371-	1
-35	151-31731-145	•SKIN - FUSELAGE NOSE PORT SIDE	001-210	1
	151-31731-959	•SKIN - FUSELAGE NOSE PORT SIDE	211-	1
	151-31731-84	•SKIN - FUSELAGE NOSE STARBOARD SIDE	001-210	1
	151-31731-960	•SKIN - FUSELAGE NOSE STARBOARD SIDE	211-	1
-36	151-31021	•DOOR ASSY - HYDRAULIC DRAIN LINE FUSELAGE ACCESS STA 67 (PORT SIDE)		1
	151-31021-3	••COVER - HYDRAULIC DRAIN LINE ACCESS DOOR		1
	99835-2-160	••STUD - ROUNDHEAD AIRLOC FASTENER (MKM)		3
	99836	••CROSS-PIN - AIRLOC FASTENER (MKM)		3
	151-31723-1	•DOUBLER ASSY - FUSELAGE STA 63 HYDRAULIC ACCESS DOOR PORT SIDE		1
	151-31723-2	•DOUBLER ASSY - FUSELAGE STA 63 HYDRAULIC ACCESS DOOR STARBOARD SIDE		1
	151-31731-965	•SHIM - (FUS STA 63 SKIN REINFORCING)		2
-37	151-31014	•DOOR - HYDRAULIC ACCESS FUSELAGE STA 63-72	001-370	2
	151-31014-951	•DOOR - HYDRAULIC ACCESS FUSELAGE STA 63-72	371-	2
	NAS205-9	•SCREW - (HYDRAULIC ACCESS DOOR ATTACHING)		16
-38	151-31470	•COVER ASSY - EMPTY AMO ACCESS FUS STA 76		2
	A5-30	••FASTENER - OVAL HEAD (DFC)		6

FIGURE AND INDEX NUMBER	GROUP FUSELAGE MAJOR ASSEMBLY NOSE FUSELAGE STA 63-126 PART NUMBER	1234567 NOMENCLATURE	CODE	UNITS PER ASSY
40 -39	151-31639	•DOUBLER ASSY - NOSE WHEEL DOOR HINGE CUT-OUT REINF FUS STA 85 (PORT SIDE)	001-210	1
	191-31633	•DOUBLER ASSY - EXPENDED AMMUNITION DOOR FUS STA 72-84 PORT SIDE	211-	1
	99947-P.130	••RECEPTACLE - AIRLOC FASTENER FLOATING STUD (MKM)	211-	6
	191-31632	•DOUBLER ASSY - EXPENDED AMMUNITION DOOR FUS STA 72-84 STARBOARD SIDE	211-	1
	99947-P.130	••RECEPTACLE - AIRLOC FASTENER FLOATING STUD (MKM)	211-	7
-40	191-31631	•DOOR ASSY - EJECTED AMO FORWARD FUSELAGE STA 72-84 LH	211-	1
-41	191-31631-9	••HINGE - AMMUNITION DOOR (MAKE FROM MS20001PY4-4-4875)	211-	1
	191-31631-11	••HINGE - AMMUNITION DOOR (MAKE FROM MS20001PX4-4-4875)	211-	1
	AN253-2-4-875	••HINGE-PIN -	211-	1
	99836	••CROSS-PIN - AIRLOC FASTENER (MKM)	211-	6
	98265-2-160	••STUD - FLUSH HEAD AIRLOC FASTENER (MKM)	211-	6
	191-31630	•DOOR ASSY - EXPENDED AMO FORWARD FUSELAGE STA 72-84 RH	211-	1
	191-31630-9	••HINGE - AMMUNITION DOOR (MAKE FROM MS20001PY4-4-4875)	211-	1
	191-31630-11	••HINGE - AMMUNITION DOOR (MAKE FROM MS20001PX4-4-4875)	211-	1
	AN253-2-4-875	••HINGE-PIN -	211-	1
	99836	••CROSS-PIN - AIRLOC FASTENER (MKM)	211-	7
	98265-2-160	••STUD - FLUSH HEAD AIRLOC FASTENER (MKM) (SPEC MIL-F-5591)	211-	7
-42	172-52085	SUPPORT ASSY - SURFACE CTL MANUAL EMY CH/OV FORWARD BELL-CRANK (SEE SECTION 7)		REF
-43	172-31853	FITTING ASSY - COCKPIT ENCLOSURE FUS STA 82 DRAIN (SEE FIG. 48)		REF
		(CONTINUED SEE SECTION 4)		

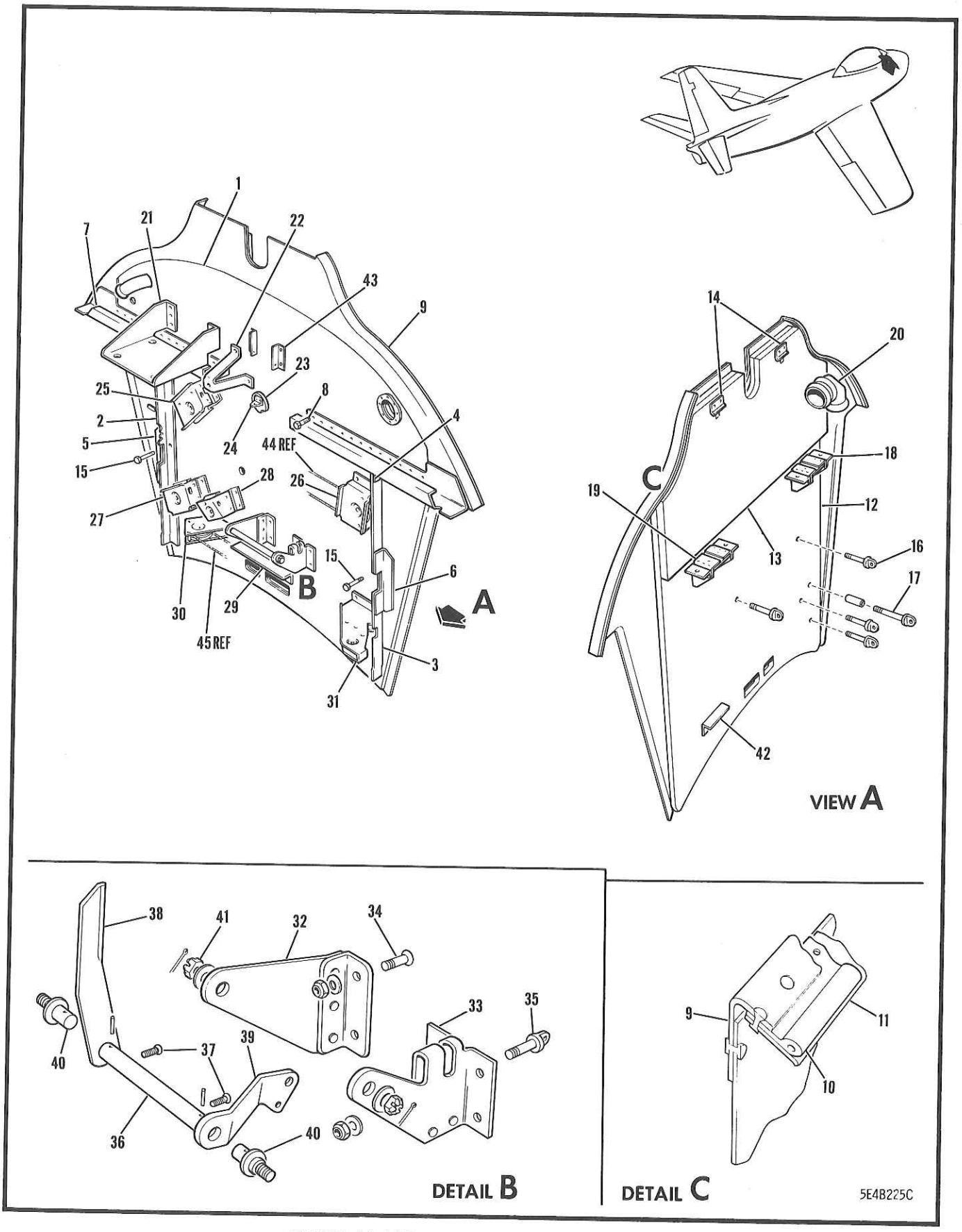

FIGURE 41 FUSELAGE STA 53 UPPER FRAME

FIGURE AND INDEX NUMBER	GROUP FUSELAGE MAJOR ASSEMBLY FUSELAGE STA 53 UPPER FRAME PART NUMBER	1234567 NOMENCLATURE	CODE	UNITS PER ASSY
41 -	172-31118	FRAME ASSY - FUSELAGE STA 53 UPPER (SEE FIG. 39)	001-300	1
	172-31118-800	FRAME ASSY - FUSELAGE STA 53 UPPER	301-	1
- 1	172-31118-3	•WEB - FUSELAGE STA 53 UPPER FRAME		1
	172-31118-31	•FRAME ASSY - FUSELAGE STA 53 ANGLE REINFORCING PORT SIDE		1
	172-31118-32	•FRAME ASSY - FUSELAGE STA 53 ANGLE REINFORCING STARBOARD SIDE		1
- 2	172-31118-7	••ANGLE - FUSELAGE STA 53 FRAME REINFORCING PORT SIDE		1
- 3	172-31118-8	••ANGLE - FUSELAGE STA 53 FRAME REINFORCING STARBOARD SIDE		1
	172-31118-23	••CLIP - FUS STA 53 PORT SIDE (HEAT & VENT INLET ATTACHING)		1
- 4	172-31118-24	••CLIP - FUS STA 53 STBD SIDE (HEAT & VENT INLET ATTACHING)		1
	S4-200	••SPRING - FASTENER (DFC)		2
- 5	172-31118-21	••ANGLE - FUSELAGE STA 53 FRAME REINFORCING PORT SIDE		1
- 6	172-31118-22	••ANGLE - FUSELAGE STA 53 FRAME REINFORCING STARBOARD SIDE		1
- 7	172-31118-5	•CHANNEL - FUSELAGE STA 53 FRAME REINF PORT SIDE		1
	172-31118-6	•CHANNEL - FUSELAGE STA 53 FRAME REINF STARBOARD SIDE		1
- 8	AN3-10A	•BOLT -		10
	AN960A10	•WASHER -		18
	AN365-1032	•NUT -		10
- 9	172-31118-11	•FORMER - FUSELAGE STA 53 FRAME REINFORCING		1
-10	172-31118-25	•SEAL - FUSELAGE STA 53 FRAME		2
-11	172-31118-27	•RETAINER - FUSELAGE STA 53 FRAME PORT SIDE		1
	172-31118-28	•RETAINER - FUSELAGE STA 53 FRAME STBD SIDE		1
	172-73570	•PLATE ASSY - FUS STA 53 PILOT FRONT ARMOUR		1
-12	172-73570-3	••PLATE - FUSELAGE STA 53 FRONT ARMOUR		1
-13	172-73570-5	••PLATE - FUSELAGE STA 53 FRONT ARMOUR		1
-14	172-73570-7	••CLIP - FRONT ARMOUR PLATE		2
	AN3-7A	••BOLT -		4
	AN365-1032	••NUT -		4
-15	AN4-10A	•BOLT -		2
	AN960A416	•WASHER -		2
	AN365-428	•NUT -		2
-16	AN42-7A	•BOLT -		4
-17	AN42-15A	•BOLT -		1
	NAS43C-3-46	•SPACER -		1
	AN960D10	•WASHER -		6
	AN365-1032	•NUT -		5
-18	172-74035	•SUPPORT ASSY - FUSELAGE STA 53 APG30 RADAR TRANSMITTER PORT SIDE		1
	172-74035-3	••BRACKET - RADAR TRANSMITTER SUPPORT		1
	172-54156	••CLIP - ELECTRICAL CAPACITOR SUPPORT	001-210	2
	2C12-1	••CLIP - (NAA)		1
	99833-P.130	••RECEPTACLE - AIRLOC FASTENER STUD (MKM)		2
	172-74036	•SUPPORT ASSY - FUSELAGE STA 53 APG30 RADAR TRANSMITTER STARBOARD SIDE		1
-19	172-74036-3	••BRACKET - RADAR TRANSMITTER SUPPORT		1
	2C12	••CLIP - (NAA)		2
	99833-P.130	••RECEPTACLE - AIRLOC FASTENER (MKM)		2
-20	172-53327	•TRAP ASSY - HEAT & VENT SYSTEM WINDSHIELD ANTI-ICING WATER	001-300	1
	191-53325	•TRAP ASSY - HEAT & VENT SYSTEM WINDSHIELD ANTI-ICING WATER	301-	1

FIGURE AND INDEX NUMBER	GROUP FUSELAGE MAJOR ASSEMBLY FUSELAGE STA 53 UPPER FRAME PART NUMBER	1234567 NOMENCLATURE	CODE	UNITS PER ASSY
41 -21	152-51062-20	•SUPPORT ASSY - ALTITUDE WARNING SIGNAL		1
-22	151-53436	•SUPPORT - H/VENT SYSTEM FOOT VALVE & DEFOG CONTROL		1
-23	151-52057	•PAD - SURFACE CTL LOCK RETR SPRING STOP		1
-24	151-52037	•CLIP - SURFACE CTL LOCK RETR SPRING ATT		1
	AN507-632R16	•SCREW -		2
	AN365-1032	•NUT -		2
-25	151-34604	•BRACKET ASSY - NOSE GEAR STEERING CABLE UPPER PULLEY PORT SIDE		1
-26	151-34605	•BRACKET ASSY - NOSE GEAR STEERING CABLE UPPER PULLEY STARBOARD SIDE		1
-27	151-34606	•BRACKET ASSY - NOSE GEAR STEERING CABLE IDLER PORT SIDE		1
-28	151-34607	•BRACKET ASSY - NOSE GEAR STEERING CABLE IDLER STARBOARD SIDE		1
-29	172-31118-15	•ANGLE - FUSELAGE STA 53 UPPER FRAME		1
-30	151-33603	•BRACKET ASSY - LANDING GR EMY REL CTR PUL		1
	AN3-10A	•BOLT -		2
	AN960A10	•WASHER -		4
	AN365-1032	•NUT -		2
-31	151-33604	•BRACKET ASSY - LANDING GEAR EMERGENCY REL OUTBOARD PULLEY		1
-32	151-52046	•BRACKET ASSY - SURFACE CTL LOCK RUDDER LKG MECH INBOARD SUPPORTING		1
-33	151-52045	•BRACKET ASSY - SURFACE CTL LOCK RUDDER LKG MECH OUTBOARD SUPPORTING		1
-34	AN509-10-17	•SCREW -		5
-35	AN42-10A	•BOLT -		1
	AN960-10	•WASHER -		2
	AN960D10	•WASHER -		4
	AN365-1032	•NUT -		6
-36	170-52429	•LOCK ASSY - SURFACE CONTROL RUDDER		1
	170-52429-3	••LOCK-TUBE - SURFACE CONTROL RUDDER		1
	170-52429-5	••LOCK-PIN - SURFACE CONTROL RUDDER		1
-37	AN530-4R4	••SCREW -		2
-38	151-52025	••ARM - SURFACE CONTROL LOCK RUDDER LOCKING		1
-39	170-52427	••CRANK - SURFACE CTL LOCK RUDDER LOCK ACTE		1
-40	151-52043	••STUD - CRANK & RUDDER LOCK-ARM RETAINING		2
	2W1-13-20-50	•WASHER - PLAIN (NAA)		2
-41	AN310-3	•NUT -		2
	AN380-2-2	•COTTER-PIN -		2
-42	172-31118-17	•ANGLE - FUSELAGE STA 53 UPPER FRAME (STBD)		1
-43	172-31118-13	•ANGLE - FUSELAGE STA 53 UPPER FRAME (PORT)		1
	172-31118-14	•ANGLE - FUSELAGE STA 53 UPPER FRAME (STBD)		1
-44	151-34631	CABLE ASSY - NOSE LANDING GEAR STEERING PORT SIDE (SEE SECTION 4)		REF
-45	151-33635-11	CABLE ASSY - LANDING GEAR EMERGENCY RELEASE FORWARD (SEE SECTION 4)		REF

-000-

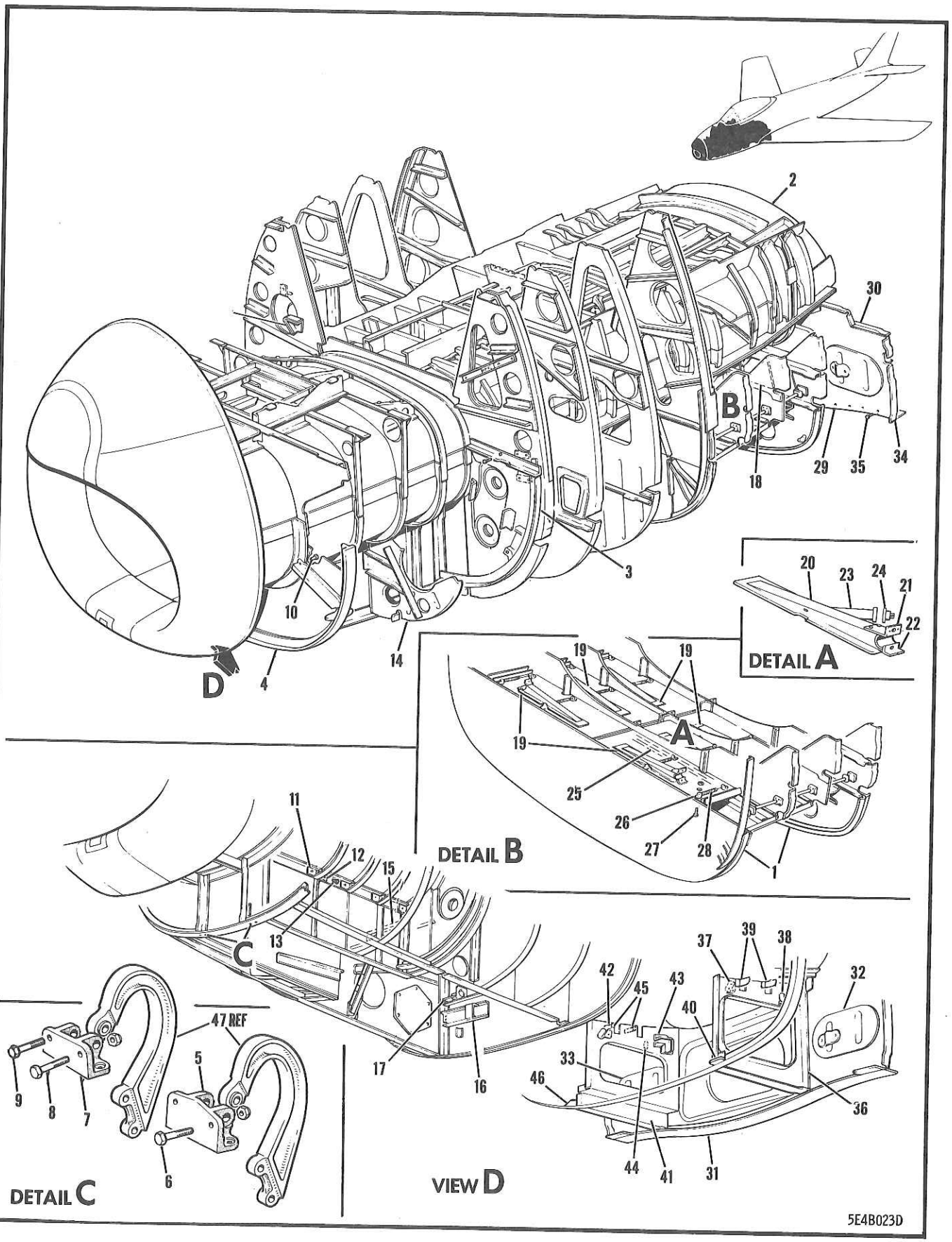

FIGURE 42 FUSELAGE STA 0-126 LOWER FRAME

FIGURE AND INDEX NUMBER	GROUP FUSELAGE MAJOR ASSEMBLY FUSELAGE STA 0-126 LOWER FRAME PART NUMBER	1234567 NOMENCLATURE	CODE	UNITS PER ASSY
42 -	151-31730-802	FRAME ASSY - FUSELAGE STA 0-126 LOWER STRUCTURE (SEE FIG. 39)	001-210	1
	151-31730-803	FRAME ASSY - FUS STA 0-126 LOWER STRUCTURE	C1	1
	151-31730-805	FRAME ASSY - FUS STA 0-126 LOWER STRUCTURE	371-399	1
- 1	151-31161-41	.FRAME ASSY - FUSELAGE STA 84-109 BOTTOM (SEE FIG. 44)		REF
- 2	152-31101-801	.DUCT ASSY - AIR INTAKE FUS STA 0-131 COMPL (SEE FIG. 45)		REF
- 3	151-31119-199	.FRAME ASSY - FUSELAGE STA 53 PORT SIDE (SEE FIG. 42A)		REF
	151-31119-200	.FRAME ASSY - FUSELAGE STA 53 STBD SIDE (SEE FIG. 42A)		REF
- 4	151-31113	.FRAME ASSY - FUSELAGE STA 26 BOTTOM		1
- 5	151-34352	..SUPPORT - NOSE GEAR STRUT FORWARD DOOR HINGE LH		1
- 6	AN4-7A	..BOLT - (SUPPORT ATTACHING)		1
	AN4-6A	..BOLT - (SUPPORT ATTACHING)		1
	AN365-428	..NUT -		1
	AN364-428	..NUT -		1
- 7	151-34353	..SUPPORT - NOSE GEAR STRUT FORWARD DOOR HINGE STARBOARD SIDE		1
- 8	AN3-6A	..BOLT - (SUPPORT ATTACHING)		1
- 9	AN3-7A	..BOLT - (SUPPORT ATTACHING)		2
	AN365-1032	..NUT -		2
-10	AN3-4A	.BOLT - (FRAME TO DUCT ATTACHING)		2
	AN960-10	.WASHER -		2
	AN365-1032	.NUT -		1
-11	151-31633	.ANGLE - TRUNNION BEAM DUCT FORWARD BOLTING FUS STA 35 PORT SIDE		1
-12	151-31636-1	.ANGLE - FUSELAGE STA 35 TRUNNION BEAM DUCT BOLTING PORT SIDE		1
-13	AN4-10A	.BOLT - (ANGLE TO DUCT ATTACHING)		1
	AN960-416	.WASHER -		1
	AN365-428	.NUT -		4
	151-31636-2	.ANGLE - FUSELAGE STA 35 & 42 & 48 TRUNNION BEAM DUCT BOLTING STARBOARD SIDE		1
	151-31634	.ANGLE - FUSELAGE STA 35 TRUNNION BEAM DUCT FORWARD BOLTING STARBOARD SIDE		1
	151-31635	.ANGLE - FUSELAGE STA 35 TRUNNION BEAM DUCT REAR BOLTING STARBOARD SIDE		1
	151-31637	.ANGLE - FUSELAGE STA 54 BEAM FORWARD BOLTING STARBOARD SIDE		3
	AN4-10A	.BOLT - (ANGLE TO DUCT ATTACHING)		3
	AN960-416	.WASHER -		3
	AN365-428	.NUT -		1
-14	151-31115	.FRAME ASSY - FUSELAGE STA 42 LWR PORT SIDE		1
	151-31472-1	..CLIP - FUSELAGE STA 42 STRINGER ATT LH		1
	151-31468	.FRAME ASSY - FUSELAGE STA 42 LWR STBD SIDE		1
	151-31625	..CLIP - FUS STA 42 NOSE WHEEL BEAM ATT RH		1
-15	151-34610	.BRACKET ASSY - NOSE GEAR STEERING CABLE FUS STA 54 LOWER		1
-16	172-58124	.SUPPORT ASSY - HYDRAULIC EMY NOSE GEAR AIR FILLER VALVE & GAUGE (STBD SIDE)		1
-17	172-58125	.BRACKET ASSY - HYDRAULIC EMY NOSE GEAR DUMP VALVE SUPPORT (STARBOARD SIDE)		1
-18	151-31745-1	.DOUBLER - FUSELAGE STA 109 ANGLE CUT-OUT REINFORCING PORT SIDE		1
	151-31745-2	.DOUBLER - FUSELAGE STA 109 ANGLE CUT-OUT REINFORCING STARBOARD SIDE		1
-19	151-53529	.OUTLET ASSY - HEAT & VENT SYS AMMUNITION HEATING COMPLETE	001-210	5

FIGURE AND INDEX NUMBER	GROUP FUSELAGE MAJOR ASSEMBLY FUSELAGE STA 0-126 LOWER FRAME PART NUMBER	1234567 NOMENCLATURE	CODE	UNITS PER ASSY
42 -	151-53528	••OUTLET ASSY - HEAT & VENT AMO HEATING	001-210	1
	151-53568	•••TUBE - HEAT & VENT SYS AMO HEATING OUT•	001-210	1
	151-53522	••CLIP ASSY - H/VENT SYS AMO HEATING OUTLET	001-210	1
	151-53530	••CLIP - HEAT & VENT SYS AMO HEATING OUTLET	001-210	1
	AN515-8R10	••SCREW -	001-210	1
	4S3D8-6	••SPACER - BOLT (NAA)	001-210	1
	2W1-11-14-65	••WASHER - PLAIN (NAA)	001-210	1
	AN365-832	••NUT -	001-210	1
	151-53539-11	•OUTLET ASSY - HEAT & VENT SYS AMO HEATING AMMUNITION BOX FUS STA 84-100 (PORT)	001-210	1
-20	151-53539-7	••OUTLET ASSY - AMMUNITION HEATING	001-210	1
	151-53529-10	•••OUTLET ASSY - HEAT & VENT SYS AMMUNITION HEATING COMPLETE	001-210	1
	151-53528	••••OUTLET ASSY - HEAT & VENT SYSTEM AMMUNITION HEATING	001-210	1
	151-31528-3	•••••SHEET - HEAT & VENT SYSTEM AMMUNITION HEATING OUTLET	001-210	1
	151-53568	•••••TUBE - HEAT & VENT SYSTEM AMMUNITION HEATING OUTLET	001-210	1
-21	151-53522	••••CLIP ASSY - HEAT & VENT SYS AMMUNITION HEATING OUTLET	001-210	1
-22	151-53530	••••CLIP - HEAT & VENT SYS AMO HEATING OUT•	001-210	1
	AN515-8R10	••••SCREW -	001-210	1
	4S3D8-6	••••SPACER - BOLT (NAA)	001-210	1
	2W1-11-14-65	••••WASHER - PLAIN (NAA)	001-210	1
	AN365-832	••••NUT -	001-210	1
-23	151-53539-3	•••TUBE - HEAT & VENT SYS AMO BOX HEATING FUSELAGE STA 83-100	001-210	1
	AN960-8	••WASHER -	001-210	3
-24	18423-0-260	••THERMOSWITCH ASSY - (FEN) (ACFT HTR TYPE)	001-210	1
	2W1AL13-10-32	••WASHER - PLAIN (NAA)	001-210	3
	AN500A8-5	••SCREW - (THERMOSWITCH ATTACHING)	001-210	3
-25	151-61016-1	•SEAL ASSY - AMMUNITION BOX TOP COVER LH		6
	151-61016-2	•SEAL ASSY - AMMUNITION BOX TOP COVER RH		6
-26	151-61018	•CLIP - AMMUNITION BOX TOP COVER SPRING ATT		24
-27	AN3-4A	•BOLT - (CLIP ATTACHING)		24
	AN960-10	•WASHER -		24
	AN365-832	•NUT -		24
-28	140-34515	•SPRING - TENSION		18
	151-31737-10	•FRAME ASSY - FUSELAGE STA 125 LOWER CANTED		1
	151-31737-57	••FRAME ASSY - FUSELAGE STA 125 LWR CANTED		1
-29	151-31737-63	•••WEB - FUSELAGE STA 125 LWR CANTED FRAME		1
	99947-C•130	•••RECEPTACLE - AIRLOC FASTENER FLOATING STUD (MKM)		12
-30	151-31737-9	•••ANGLE - FUSELAGE STA 125 LOWER CANTED FRAME PORT SIDE		1
	151-31737-27	•••ANGLE - FUSELAGE STA 125 LOWER CANTED FRAME STARBOARD SIDE		1
-31	151-31737-23	•••SEAL - FUSELAGE STA 125 LWR CANTED FRAME		1
	151-31737-25	•••RETAINER - FUSELAGE STA 125 LOWER CANTED FRAME SEAL		1
-32	151-31737-19	••DOOR ASSY - FUSELAGE STA 125 LOWER PORT		1
	151-31737-55	•••COVER ASSY - FUSELAGE STA 125 LOWER PORT		1
	151-31737-53	••••COVER - FUSELAGE STA 125 LWR PORT SIDE		1
	99835-1-140	••••STUD - ROUNDHEAD AIRLOC FASTENER (MKM)		2
	99836	••••CROSS-PIN - AIRLOC FASTENER (MKM)		2
	99947-P•130	•••RECEPTACLE - AIRLOC FASTENER FLOATING STUD (MKM)		2
	99835-1-150	•••STUD - ROUNDHEAD AIRLOC FASTENER (MKM)		6

FIGURE AND INDEX NUMBER	GROUP FUSELAGE MAJOR ASSEMBLY FUSELAGE STA 0-126 LOWER FRAME PART NUMBER	1234567 NOMENCLATURE	CODE	UNITS PER ASSY
42 -	99836	•••CROSS-PIN - AIRLOC FASTENER (MKM)		6
-33	151-31737-49	••DOOR ASSY - FUSELAGE STA 125 LOWER STARBOARD SIDE		1
	151-31737-47	•••DOOR - FUSELAGE STA 125 LOWER STBD SIDE		1
	99835-1-150	•••STUD - ROUNDHEAD AIRLOC FASTENER (MKM)		6
	99836	•••CROSS-PIN - AIRLOC FASTENER (MKM)		6
-34	151-31737-51	••ANGLE ASSY - FUS STA 125 LWR CANTED FRAME		1
	99947-C.130	•••RECEPTACLE - AIRLOC FASTENER (MKM)		12
-35	AN3-4A	••BOLT - (FRAME ATTACHING)		19
	AN960C10L	••WASHER -		19
-36	151-31738	•WEB ASSY - FUSELAGE STA 109-125 AMMUNITION CELL PORT SIDE		1
-37	151-31733-1	••BRACKET - RADIO ACC DOOR FUS STA 109 PORT		1
	4S4D4-12	••SPACER - RIVET (NAA)		1
-38	151-31722	••BRACKET ASSY - RADIO ACCESS DOOR FUSELAGE STA 125 PORT SIDE		1
	151-31738-5	••COVER - FUS STA 109-125 AMO CELL PORT		1
	A3235-020	••WASHER - FLAT-HEAD SCREW (TIN)		16
	AN509-10-8	••SCREW -		16
	2C9-1	••CLIP - (NAA)	001-300	1
-39	151-31720-1	•CLIP - FUSELAGE STA 114 DUCT FRAME TO AMO CELL WEB PORT SIDE		2
	151-31721-1	•CLIP - FUSELAGE STA 119 DUCT FRAME TO AMO CELL WEB PORT SIDE		2
-40	151-31728	•CLIP - FUSELAGE STA 126 PORT SIDE WEB ATT		1
	AN3-5A	•BOLT - (CLIP ATTACHING)		1
	AN960-10L	•WASHER -		1
	AN365-1032	•NUT -		1
-41	151-31739	•WEB ASSY - FUS STA 109-125 AMO CELL STBD		1
-42	151-31733-2	••BRACKET - RADIO ACC DOOR FUS STA 109 STBD		1
	4S4D4-12	••SPACER - RIVET (NAA)		1
-43	151-31735	••BRACKET ASSY - RADIO ACCESS DOOR FUSELAGE STA 125 STARBOARD SIDE		1
	151-31717	••ANGLE ASSY - FUSELAGE STA 125 AMMUNITION CELL WEB STARBOARD SIDE		1
	151-31739-5	••COVER - FUSELAGE STA 109-125 AMO CELL		1
	A3235-020	••WASHER - FLAT-HEAD SCREW (TIN)		14
	AN509-10-8	••SCREW -		14
-44	2C9	••CLIP - (NAA)	001-300	1
-45	151-31720-2	•CLIP - FUSELAGE STA 114 DUCT FRAME TO AMO CELL WEB STARBOARD SIDE		2
	151-31721-2	•CLIP - FUSELAGE STA 119 DUCT FRAME TO AMO CELL WEB STARBOARD SIDE		2
-46	151-31729	•CLIP - FUSELAGE STA 126 STBD SIDE WEB ATT		1
	AN3-5A	•BOLT - (CLIP ATTACHING)		1
	AN960-10L	•WASHER -		1
	AN365-1032	•NUT -		1
-47	151-34354	FITTING ASSY - NOSE GEAR STRUT FORWARD DOOR HINGE (SEE SECTION 4)		REF
		(CONTINUED SEE FIG. 43)		
			(CONTINUED)	

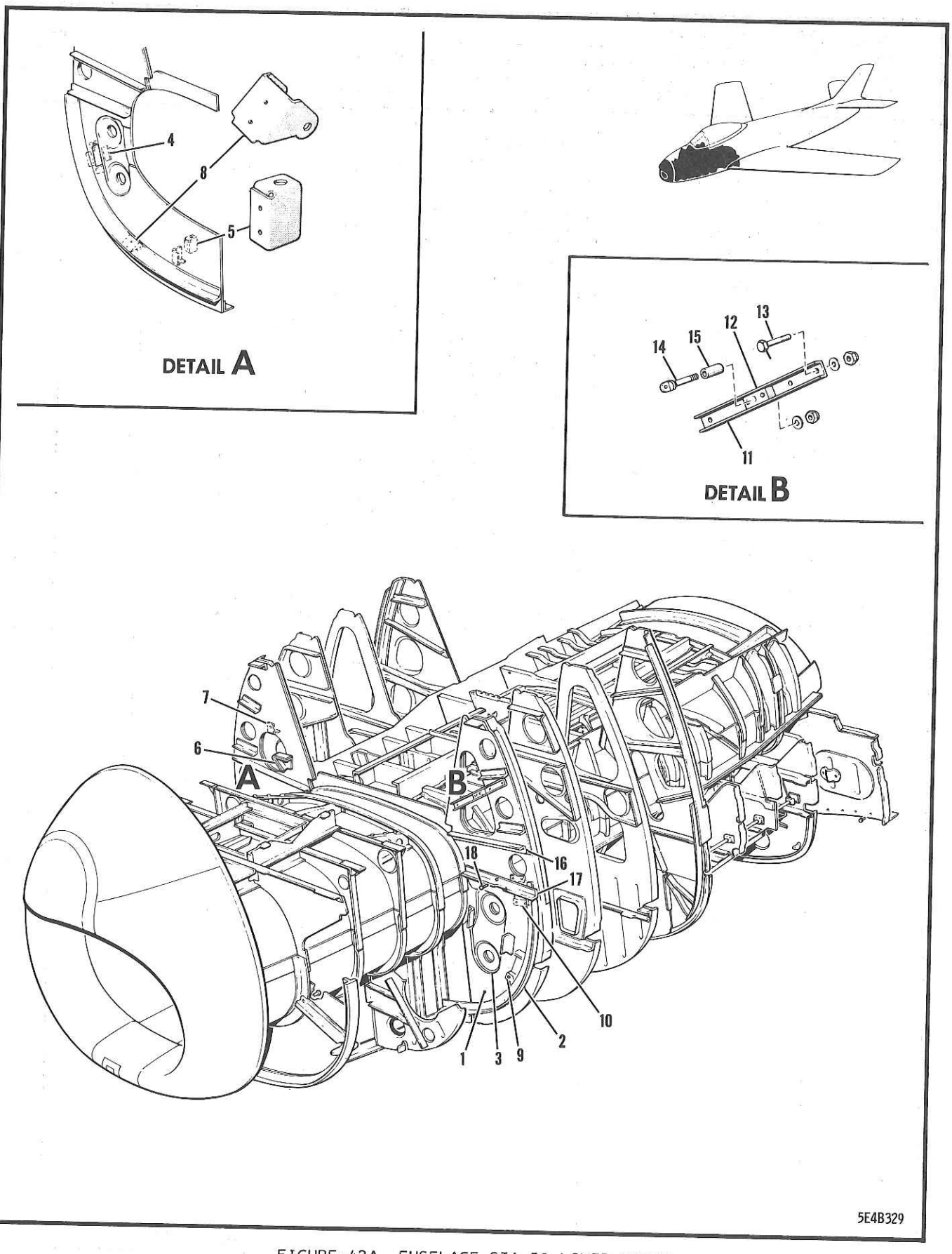

FIGURE 42A FUSELAGE STA 53 LOWER FRAME

FIGURE AND INDEX NUMBER	GROUP FUSELAGE MAJOR ASSEMBLY FUSELAGE STA 53 LOWER FRAME PART NUMBER	1234567 NOMENCLATURE	CODE	UNITS PER ASSY
42A-	151-31119-199	FRAME ASSY - FUSELAGE STA 53 PORT SIDE (SEE FIG. 42)		1
	151-31119-200	FRAME ASSY - FUSELAGE STA 53 STARBOARD SIDE (SEE FIG. 42)	A11	1
	151-31119-800	FRAME ASSY - FUSELAGE STA 53 STARBOARD SIDE	371-399	1
	151-31119-91	•WEB ASSY - FUSELAGE STA 53 PORT SIDE		1
	151-31119-106	•WEB ASSY - FUSELAGE STA 53 STARBOARD SIDE		1
- 1	151-31119-83	••WEB - FUSELAGE STA 53 PORT SIDE		1
	151-31119-104	••WEB - FUSELAGE STA 53 STARBOARD SIDE		1
- 2	151-31119-7	•ANGLE - FUSELAGE STA 53 WEB PORT SIDE		1
	151-31119-8	•ANGLE - FUSELAGE STA 53 WEB STARBOARD SIDE		1
	151-31119-53	•ANGLE - FUSELAGE STA 53 WEB PORT SIDE		1
	151-31119-59	•ANGLE - FUSELAGE STA 53 WEB STARBOARD SIDE		1
	151-31119-27	•DOUBLER - FUSELAGE STA 53 FRAME (PORT)		1
	151-31119-29	•BRACKET - FUSELAGE STA 53 FRAME (PORT)		1
	151-31119-65	•ANGLE ASSY - FUSELAGE STA 53 WEB (PORT)		1
	151-31119-66	•ANGLE ASSY - FUSELAGE STA 53 WEB STARBOARD		1
	151-31119-55	••ANGLE - FUSELAGE STA 53 WEB PORT SIDE		1
	151-31119-57	••ANGLE - FUSELAGE STA 53 WEB STBD SIDE (REWORK AS PER EO 05-5E-6A/103)		1
- 3	151-31479-1	•DOME ASSY - FUSELAGE STA 54 OXYGEN BOTTLE SUPPORTING PORT SIDE		1
	151-31479-2	•DOME ASSY - FUSELAGE STA 54 OXYGEN BOTTLE SUPPORTING STARBOARD SIDE		1
- 4	151-33606	•BRACKET - ASSY - LANDING GEAR EMY RELEASE N/WHL DOOR LOCK LOWER PULLEY STBD		1
- 5	140-58442	•CLIP - HYDRAULIC FAIRING DOOR HOSE SUPPORT		2
- 6	170-74033	•BRACKET - AN/APG30 RADAR RANGE POWER REAR SUPPORTING STARBOARD SIDE		1
- 7	151-54319	•CLIP - ELECTRICAL WIRE BUNDLE MTG (STBD)		1
	AN515-8R6	•SCREW - (CLIP ATTACHING)		1
	AN365-832	•NUT -		1
- 8	151-33620	•CLIP - LANDING GEAR EMY RELEASE N/WHL DOOR LOCK ACTE ARM HOLD-BACK SPRING STBD		1
	AN3-4A	•BOLT - (CLIP ATTACHING)		2
	AN960-10	•WASHER -		2
	AN365-1032	•NUT -		2
- 9	151-34609	•BRACKET ASSY - NOSE GEAR STEERING CABLE INTER LOWER (PORT SIDE)		1
	4S4D4-23	••SPACER - RIVET (NAA)		2
-10	151-34608	•BRACKET ASSY - NOSE GEAR STEERING CABLE INTER (PORT SIDE)		1
	4S4D4-23	••SPACER - RIVET (NAA)		1
	AN392-27	••PIN -		1
	AN380-2-2	••COTTER-PIN -		1
	170-74038	•CHANNEL ASSY - FUSELAGE STA 105 RANGE SERVO SUPPORTING (PORT SIDE)		1
-11	170-74038-3	••CHANNEL - FUSELAGE STA 105 RANGE SERVO SUPPORTING (PORT SIDE)		1
-12	170-74037	•••SPACER - FUS STA 105 RANGE SERVO SUPPORT		3
-13	AN3-4A	•BOLT - (CHANNEL ATTACHING)		3
	AN960D10	•WASHER -		3
	AN365-1032	•NUT -		1
-14	AN42-15A	•BOLT - (PORT SIDE)		1
-15	NAS43C3-16	•SPACER -		1
	AN960D10	•WASHER -		1
	AN365-1032	•NUT -		1
-16	151-31119-11	•ANGLE - FUS STA 53 WEB REINFORCING PORT		1
	151-31119-12	•ANGLE - FUS STA 53 WEB REINFORCING STBD		1
-17	151-31119-13	•ANGLE - FUS STA 53 WEB REINFORCING PORT		1

FIGURE AND INDEX NUMBER	GROUP FUSELAGE MAJOR ASSEMBLY FUSELAGE STA 53 LOWER FRAME PART NUMBER	1234567 NOMENCLATURE	CODE	UNITS PER ASSY
42A- -18	151-31119-14 AN42-4A AN960D10 AN365-1032	•ANGLE - FUS STA 53 WEB REINFORCING STBD •EYE-BOLT - •WASHER - •NUT -		1 1 1 1

-000-

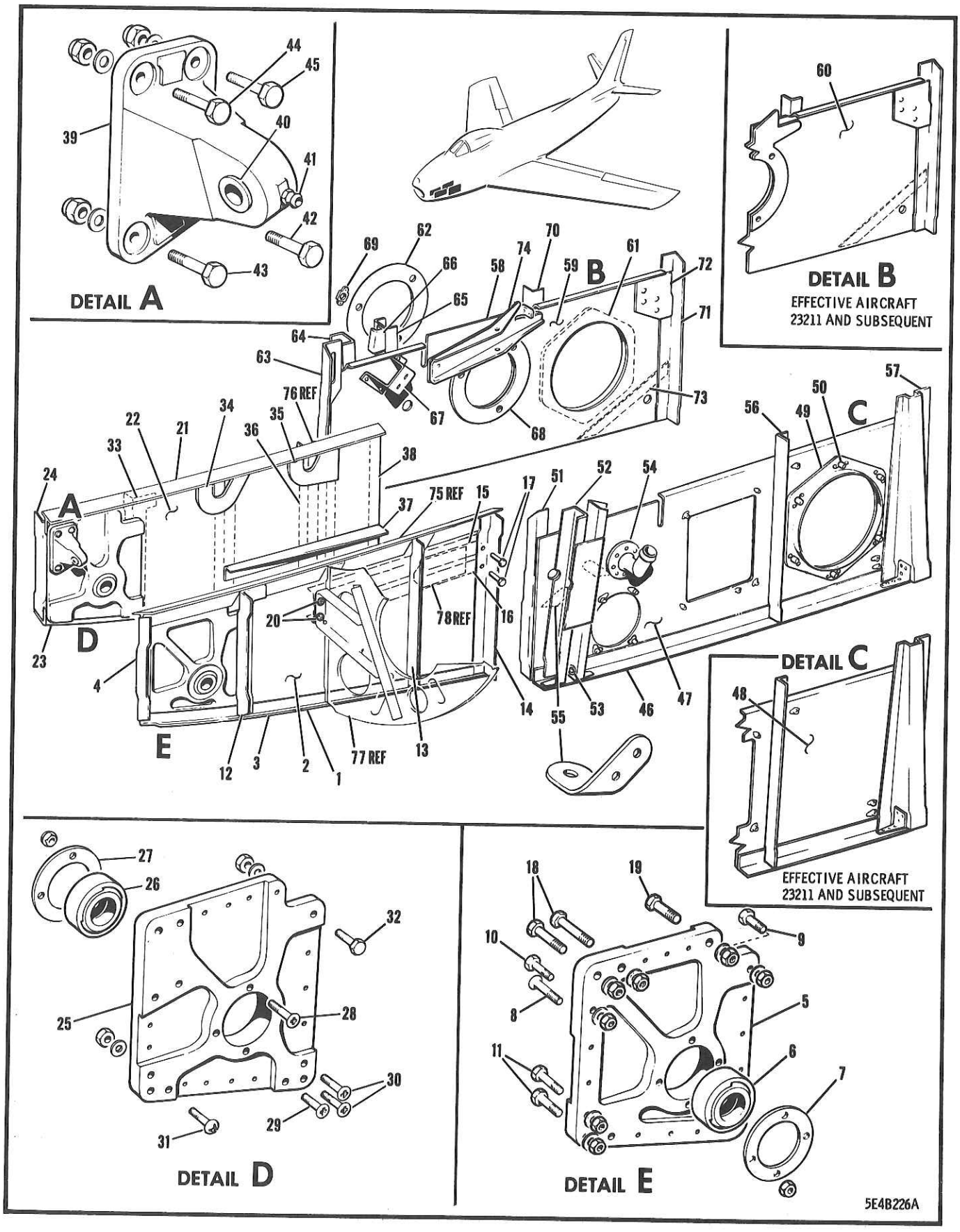

FIGURE 43 NOSE WHEEL & TRUNNION BEAMS

FIGURE AND INDEX NUMBER	GROUP FUSELAGE MAJOR ASSEMBLY NOSE WHEEL & TRUNNION BEAMS PART NUMBER	1234567 NOMENCLATURE	CODE	UNITS PER ASSY
43 -	151-31730-802	FRAME ASSY - FUSELAGE STA 0-126 LOWER STRUCTURE (SEE FIG. 42)		REF
- 1	151-31141-51	•BEAM ASSY - FUSELAGE STA 27-54 TRUN PORT		1
- 2	151-31141-33	••WEB - FUS STA 28-53 TRUNNION (PORT SIDE)		1
- 3	151-31141-5	••ANGLE - FUSELAGE STA 28-53 TRUNNION		1
	151-31141-41	••BEAM ASSY - FUS STA 28-53 TRUNNION (PORT)		1
- 4	151-31141-15	•••ANGLE - FUSELAGE STA 27 TRUNNION (PORT)		1
	151-31141-19	•••FILLER - FUSELAGE STA 27 TRUNNION (PORT)		1
	151-31141-21	•••FILLER - FUSELAGE STA 27 TRUNNION (PORT)		1
	152-34121-7	••FITTING ASSY - NOSE GEAR TRUN SUP. (PORT)		1
- 5	152-34121-3	•••FITTING - NOSE GEAR TRUNNION SUPPORT (PORT SIDE) (MAKE FROM 152-34121)		1
- 6	142-33139	•••BEARING ASSY - NOSE GEAR SIDE BRACE		1
- 7	140-34123	•••RING - NOSE GEAR TRUN SUP. BEARING		1
- 8	AN509-416-19	•••SCREW - (RING ATTACHING)		4
	AN365-428	•••NUT -		4
- 9	AN4-6A	••BOLT - (FITTING TO BEAM ATTACHING)		1
-10	AN4-7A	••BOLT - (FITTING TO BEAM ATTACHING)		5
-11	AN4-10A	••BOLT - (FITTING TO BEAM ATTACHING)		2
	AN960-416	••WASHER -		8
	AN365-428	••NUT -		8
-12	151-31141-9	••ANGLE - FUSELAGE STA 35 TRUNNION (PORT)		1
	151-31141-13	••FILLER - FUSELAGE STA 35 TRUNNION (PORT)		1
	151-31141-23	••DOUBLER - FUS STA 38-54 TRUNNION (PORT)		1
-13	151-31141-7	••ANGLE - FUSELAGE STA 48 TRUNNION (PORT)		1
-14	151-31141-17	••ANGLE - FUSELAGE STA 54 TRUNNION (PORT)		1
-15	151-31141-25	••ANGLE - FUS STA 38-54 TRUNNION (PORT)		1
-16	151-31141-27	••ANGLE - FUS STA 38-54 TRUNNION (PORT)		1
-17	AN3-5A	••BOLT -		2
	AN960-10	••WASHER -		2
	AN365-1032	••NUT -		2
-18	AN4-10A	•BOLT - (FITTING TO FRAME ATTACHING)		2
-19	AN4-7A	•BOLT - (FITTING TO FRAME ATTACHING)		1
	AN960-416	•WASHER -		6
	AN365-428	•NUT -		3
-20	AN3-6A	•BOLT - (FRAME TO BEAM ATTACHING)		2
	AN960-10	•WASHER -		2
	AN365-1032	•NUT -		2
-21	151-31142	•BEAM ASSY - FUS STA 27-63 TRUNNION STBD		1
-22	151-31142-3	••WEB - FUSELAGE STA 27 TO 63 TRUNNION STBD		1
-23	151-31142-5	••ANGLE - FUS STA 27-63 TRUNNION STBD SIDE		1
-24	151-31142-19	••ANGLE - FUSELAGE STA 27 TRUNNION STBD		1
	152-34121-9	••FITTING ASSY - NOSE GEAR TRUNNION STBD		1
-25	152-34121-5	•••FITTING - NOSE GEAR TRUNNION STBD SIDE (MAKE FROM 152-34121)		1
-26	142-33139	•••BEARING ASSY - NOSE GEAR SIDE BRACE		1
-27	140-34123	•••RING - NOSE GEAR TRUN SUP. BEARING RTNG		1
-28	AN509-416-19	•••SCREW - (RING ATTACHING)		4
	AN365-428	•••NUT -		4
-29	NAS206-15	••SCREW - (FITTING TO BEAM ATTACHING)		1
-30	NAS206-17	••SCREW - (FITTING TO BEAM ATTACHING)		2
-31	NAS222-15	••SCREW - (FITTING TO BEAM ATTACHING)		1
	NAS222-18	••SCREW - (FITTING TO BEAM ATTACHING)		2
-32	AN4-7A	••BOLT - (FITTING TO BEAM ATTACHING)		1
	AN960-416	••WASHER -		7
	AN365-428	••NUT -		7
-33	151-31142-7	••ANGLE - FUSELAGE STA 35 TRUNNION STBD		1
-34	151-31142-13	••DOUBLER - FUSELAGE STA 42 TRUNNION STBD		1
-35	151-31142-23	••DOUBLER - FUSELAGE STA 48 TRUNNION STBD		1
-36	151-31142-15	••ANGLE - FUSELAGE STA 50 TRUNNION STBD		1

FIGURE AND INDEX NUMBER	GROUP	FUSELAGE	CODE	UNITS PER ASSY
	MAJOR ASSEMBLY	NOSE WHEEL & TRUNNION BEAMS		
	PART NUMBER	1234567 NOMENCLATURE		
43 -	151-31142-9	••ANGLE - FUSELAGE STA 50 TRUNNION STBD		1
-37	151-31142-11	••ANGLE - FUSELAGE STA 42-54 TRUNNION STBD		1
-38	151-31142-951	••ANGLE - FUSELAGE STA 54 TRUNNION STBD SIDE (AS PER EO 05-5E-6B/1)		1
	AN3-5A	••BOLT - (ANGLE ATT) (AS PER EO 05-5E-6B/1)	001-020	4
	AN3-4A	••BOLT - (ANGLE ATT) (AS PER EO 05-5E-6B/1)	001-020	1
	AN960D10L	••WASHER - (AS PER EO 05-5E-6B/1)	001-020	10
	AN960D10	••WASHER - (AS PER EO 05-5E-6B/1)	001-020	10
	AN365-1032	••NUT - (AS PER EO 05-5E-6B/1)	001-020	5
	151-31142-17	••SHIM - FUSELAGE STA 35 TRUNNION STBD SIDE		1
-39	152-34186-20	••FITTING ASSY - NOSE GEAR ROTATING MECHANISM ANCHOR		1
-40	165-34187	•••BUSHING - NOSE GEAR ROTATING MECHANISM ANCHOR FITTING		2
-41	AN944-101	•••FITTING -		1
-42	AN4-12A	••BOLT - (ANCHOR FTG TO TRUNNION FTG ATT)		1
	AN960D416	••WASHER -		1
	AN365-428	••NUT -		1
-43	AN5-13A	••BOLT - (ANCHOR FTG TO TRUNNION FTG ATT)		1
	AN960D516	••WASHER -		1
	AN365-524	••NUT -		1
-44	AN5-14A	•BOLT - (ANCHOR FTG TO TRUN FTG & BEAM ATT)		1
	AN960D516	•WASHER -		1
	AN365-524	•NUT -		1
-45	AN4-13A	•BOLT - (ANCHOR FTG TO TRUN FTG & BEAM ATT)		1
	AN960D416	•WASHER -		1
	AN365-428	•NUT -		1
	AN4-10A	•BOLT - (TRUNNION FITTING TO BEAM ATT)		1
	AN960-416	•WASHER -		1
	AN365-428	•NUT -		1
	151-31143-31	•BEAM ASSY - FUSELAGE STA 54-85 N/GR PORT	001-020	1
	151-31143-41	•BEAM ASSY - FUSELAGE STA 54-85 N/GR PORT	021-210	1
	151-31143-61	•BEAM ASSY - FUSELAGE STA 54-85 N/GR PORT	211-	1
-46	151-31143-37	••BEAM ASSY - FUS STA 54-85 NOSE GEAR PORT	001-020	1
	151-31143-51	••BEAM ASSY - FUS STA 54-85 NOSE GEAR PORT	021-210	1
	151-31143-55	••BEAM ASSY - FUS STA 54-85 NOSE GEAR PORT	211-	1
-47	151-31143-35	•••WEB - FUS STA 54-85 NOSE GEAR BEAM PORT	001-020	1
	151-31143-39	•••WEB - FUS STA 54-85 NOSE GEAR BEAM PORT	021-210	1
-48	151-31143-59	•••WEB - FUS STA 54-85 NOSE GEAR BEAM PORT	211-	1
	151-31143-33	•••DOUBLER - FUSELAGE STA 64-70 NOSE GEAR BEAM PORT SIDE		1
-49	151-31155	•••COLLAR - FUSELAGE STA 77 ACC DOOR REINF	001-210	1
-50	S5-200	••SPRING - FASTENER (DFC)	001-210	6
-51	151-31143-7	••ANGLE - FUS STA 54 NOSE GEAR BEAM PORT		1
	151-31143-9	••DOUBLER - FUSELAGE STA 54-63 NOSE GEAR BEAM PORT SIDE		1
-52	151-31431	••SUPPORT ASSY - FUSELAGE STA 56 FWD NOSE GEAR DOOR HINGE (PORT SIDE)		1
-53	151-31431-811	•••BUSHING - (TO ELIMINATE ELONGATION OF DOOR HINGE SUPPORT HOLES) (AS PER EO 05-5E-6A/162)		2
	151-31431-951	•••BUSHING - OVERSIZE (TO REPLACE BUSHING 151-31431-811 WHEN HOLES BECOME ELONGATED AFTER EO 05-5E-6A/162 HAS BEEN INCORPORATED)		2
-54	172-53342	••OUTLET ASSY - HEAT & VENT SYS WINDSHIELD ANTI-ICING DRAIN (PORT SIDE)		1
-55	140-58461-1	••BRACKET - HYDRAULIC AUX DOOR CYL HOSE LH (PORT SIDE)		1
	140-58461-2	••BRACKET - HYDRAULIC AUX DOOR CYL HOSE RH (PORT SIDE)		1
-56	151-31143-13	••ANGLE - FUS STA 72 NOSE GEAR BEAM PORT		1
-57	151-31432	••SUPPORT ASSY - FUSELAGE STA 83 REAR NOSE GEAR DOOR HINGE		1

FIGURE AND INDEX NUMBER	GROUP FUSELAGE MAJOR ASSEMBLY NOSE WHEEL & TRUNNION BEAMS PART NUMBER	1234567 NOMENCLATURE	CODE	UNITS PER ASSY
43 -	151-31143-11	••ANGLE - FUS STA NOSE GEAR BEAM PORT SIDE		1
	151-31143-23	••CLIP - FUSELAGE STA 65 NOSE GEAR BEAM PORT SIDE (LEVELING)		1
	151-31143-53	••CLIP - FUSELAGE STA 80 NOSE GEAR BEAM PORT SIDE (LEVELING) (AS PER EO 05-5E-6A/37)		1
	AN3-3A	••BOLT - (CLIP ATT) (AS PER EO 05-5E-6A/37)		1
	AN960D10L	••WASHER - (AS PER EO 05-5E-6A/37)	001-020	1
	AN365-1032	••NUT - (AS PER EO 05-5E-6A/37)	001-020	1
	151-31144-33	•BEAM ASSY - FUSELAGE STA 54-85 N/GR STBD	001-210	1
	151-31144-801	•BEAM ASSY - FUSELAGE STA 54-85 N/GR STBD	211-	1
-58	151-31144-21	••BEAM ASSY - FUS STA 54-85 NOSE GEAR STBD	001-210	1
	151-31144-951	••BEAM ASSY - FUS STA 54-85 NOSE GEAR STBD	211-	1
-59	151-31144-3	•••WEB - FUS STA 54-85 NOSE GEAR BEAM STBD	001-210	1
-60	151-31144-953	•••WEB - FUS STA 54-85 NOSE GEAR BEAM STBD	211-	1
-61	151-31155	•••COLLAR - FUSELAGE STA 77 ACC DOOR REINF	001-210	1
-62	151-31643	•••DOUBLER - FUSELAGE STA 68 NOSE GEAR BEAM		1
	S5-200	•••SPRING - FASTENER (DFC)	001-210	6
-63	151-31144-7	••ANGLE - FUS STA 54 NOSE GEAR BEAM STBD		1
-64	151-31144-15	••CHANNEL - FUS STA 55 NOSE GEAR BEAM STBD		1
-65	151-31144-17	••CHANNEL - FUS STA 59 NOSE GEAR BEAM STBD		1
-66	151-31144-19	••CHANNEL - FUS STA 59 NOSE GEAR BEAM STBD		1
-67	151-54318	••BRACKET - ELECTRICAL NOSE GEAR UPLK IND		1
-68	151-31705-11	••COVER - FUS STA 68 NOSE GEAR BEAM STBD		1
-69	99947-P•130	••RECEPTACLE - (MKM) (FLOATING STUD)		3
-70	151-31144-13	••ANGLE - FUS STA 72 NOSE GEAR BEAM STBD		1
-71	151-31144-27	••ANGLE - FUS STA 85 NOSE GEAR BEAM STBD		1
-72	151-31144-24	••DOUBLER - FUSELAGE STA 81-85 NOSE GEAR BEAM STARBOARD SIDE		1
-73	151-31144-9	••ANGLE - FUS STA 77-85 NOSE GEAR BEAM STBD		1
-74	151-31706	•CHANNEL - FUS STA 63-72 BUNGEE SUP• STBD		1
-75	151-31653	SUPPORT - FUSELAGE STA 27-54 TRUN BEAM DUCT PORT SIDE (SEE FIG• 46)		REF
-76	151-31654	SUPPORT - FUSELAGE STA 27-63 TRUN BEAM DUCT STBD SIDE (SEE FIG• 46)		REF
-77	151-31115	FRAME ASSY - FUSELAGE STA 42 LOWER PORT (SEE FIG• 42)		REF
-78	140-34522	FITTING ASSY - NOSE GEAR EXTN CYLINDER ATT (SEE SECTION 4)		REF
		(CONTINUED SEE SECTION 4)		

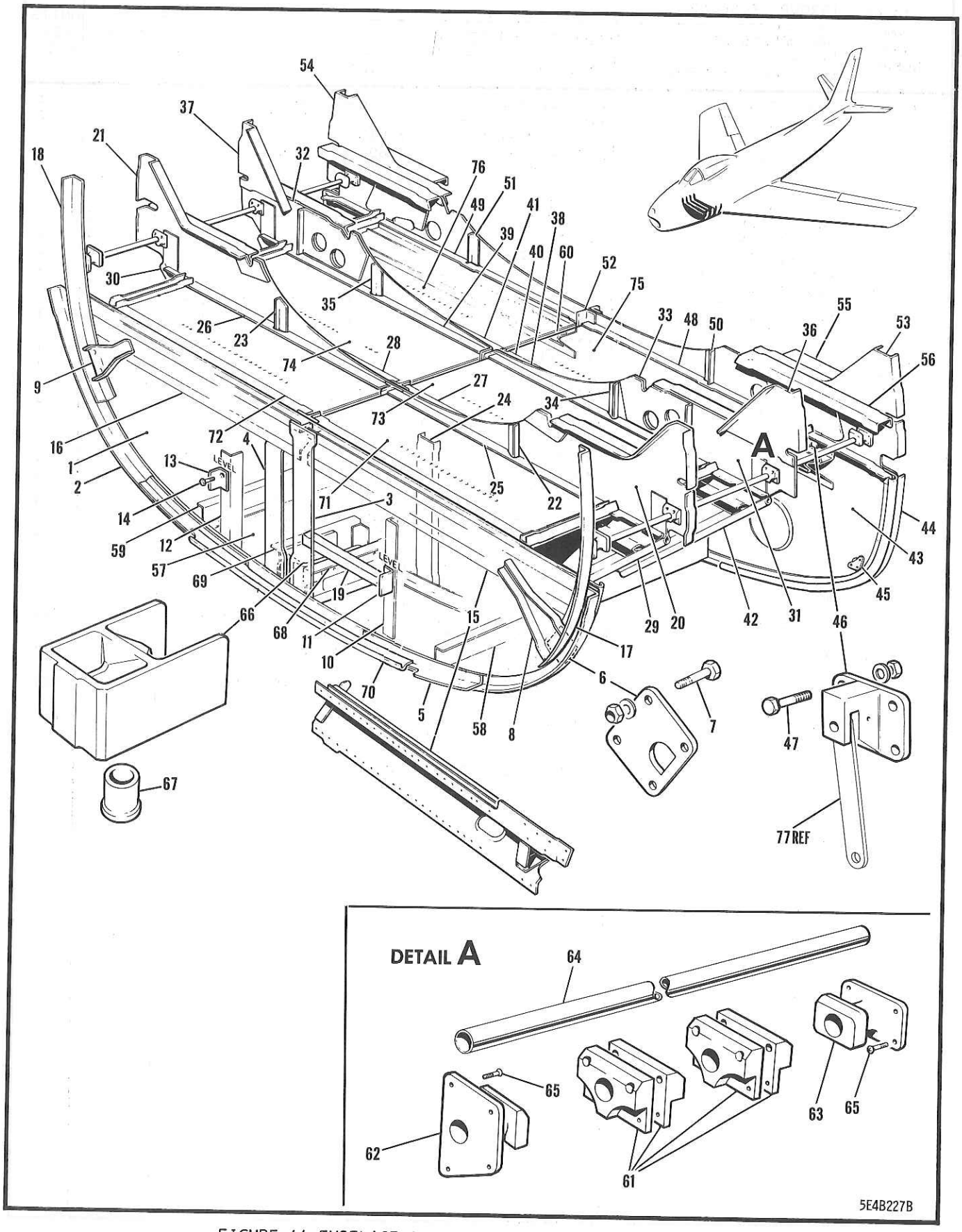

FIGURE 44 FUSELAGE STA 84-109 COMPLETE BOTTOM FRAME

FIGURE AND INDEX NUMBER	GROUP FUSELAGE MAJOR ASSEMBLY FUSELAGE STA 84-109 COMPLETE BOTTOM FRAME PART NUMBER	1234567 NOMENCLATURE	CODE	UNITS PER ASSY
44 -	151-31161-41	FRAME ASSY - FUSELAGE STA 84-109 COMPLETE BOTTOM (SEE FIG. 42)	001-210	1
	151-31161-801	FRAME ASSY - FUSELAGE STA 84-109 COMPL BOT.	211-	1
	151-31128	.FRAME ASSY - FUSELAGE STA 84 BOTTOM	001-020	1
	151-31128-30	.FRAME ASSY - FUSELAGE STA 84 BOTTOM	021-	1
- 1	151-31128-3	..WEB - FUSELAGE STA 84 BOTTOM FRAME		1
- 2	151-31128-5	..ANGLE - FUSELAGE STA 84 BOTTOM FRAME		1
- 3	151-31128-7	..TEE - FUSELAGE STA 84 BOTTOM FRAME		1
- 4	151-31128-19	..TEE - FUSELAGE STA 84 BOTTOM FRAME (STARBOARD SIDE)		1
- 5	151-31128-13	..ANGLE - FUSELAGE STA 84 BOTTOM FRAME PORT		1
	151-31128-14	..ANGLE - FUSELAGE STA 84 BOTTOM FRAME STBD		1
- 6	140-31034	..BRACKET - AMMUNITION ACC DOOR LOCK FRONT		2
- 7	AN3-6A	..BOLT - (PLATE ATTACHING)		4
	AN3-5A	..BOLT - (PLATE ATTACHING)		4
	AN960A10	..WASHER -		4
	AN365-1032	..NUT -		8
- 8	151-31157-1	..SUPPORT - FUS STA 85 AMO BOX LOCK PORT		1
- 9	151-31157-2	..SUPPORT - FUS STA 85 AMO BOX LOCK STBD		1
-10	151-31128-952	..ANGLE - FUSELAGE STA 84 BOT. FRAME (PORT) (AS PER EO 05-5E-6A/37)		1
-11	151-31128-953	..CLIP - FUSELAGE STA 84 BOT. FRAME (PORT) (AS PER EO 05-5E-6A/32)		1
-12	151-31128-951	..ANGLE - FUSELAGE STA 84 BOT. FRAME (STBD) (AS PER EO 05-5E-6A/37)		1
-13	151-31128-954	..CLIP - FUSELAGE STA 84 BOT. FRAME (STBD) (AS PER EO 05-5E-6A/37)		1
-14	AN3-3A	..BOLT - (STBD SIDE CLIP ATTACHING)		1
-15	151-31156-1	..TRACK ASSY - FUSELAGE STA 85 AMO BOX PORT		1
-16	151-31156-2	..TRACK ASSY - FUSELAGE STA 85 AMO BOX STBD		1
-17	151-31456-1	..ANGLE - FUSELAGE STA 85 OUTBD SPLICE PORT		1
-18	151-31456-2	..ANGLE - FUSELAGE STA 85 OUTBD SPLICE STBD		1
-19	151-31128-801	..STIFFENER - FUSELAGE STA 84 BOTTOM FRAME (TO REINFORCE WEB AT N/WHL DOOR SEQ SW PORT) (AS PER EO 05-5E-6A/185)	732-	1
	AN960D10	..WASHER - (TO SHIM SWITCH)	738-	4
	AN960C10L	..WASHER - (TO SHIM SWITCH)	738-	4
	151-31130-31	.FRAME ASSY - FUSELAGE STA 93 BOTTOM PORT		1
	151-31130-32	.FRAME ASSY - FUSELAGE STA 93 BOTTOM STBD		1
-20	151-31130-33	..WEB - FUSELAGE STA 93 BOTTOM FRAME PORT		1
-21	151-31130-34	..WEB - FUSELAGE STA 93 BOTTOM FRAME STBD		1
-22	151-31130-7	..ANGLE - FUSELAGE STA 93 BOTTOM FRAME PORT		1
-23	151-31130-8	..ANGLE - FUSELAGE STA 93 BOTTOM FRAME STBD		1
-24	140-31182	..STIFFENER - FUSELAGE JACK PAD FTG (STBD)		1
-25	151-31450-1	..TRACK - FUSELAGE STA 93 FWD AMO BOX PORT		1
-26	151-31450-2	..TRACK - FUSELAGE STA 93 FWD AMO BOX STBD		1
-27	151-31451-1	..TRACK - FUSELAGE STA 93 REAR AMO BOX PORT		1
-28	151-31451-2	..TRACK - FUSELAGE STA 93 REAR AMO BOX STBD		1
-29	151-31480-1	..STIFFENER - FUS STA 93 OUTBOARD WEB PORT		1
-30	151-31480-2	..STIFFENER - FUS STA 93 OUTBOARD WEB STBD		1
	151-31134-91	.FRAME ASSY - FUSELAGE STA 100 BOTTOM PORT		1
	151-31134-92	.FRAME ASSY - FUSELAGE STA 100 BOTTOM STBD		1
	151-31134-49	..FRAME ASSY - FUSELAGE STA 100 BOTTOM PORT		1
	151-31134-50	..FRAME ASSY - FUSELAGE STA 100 BOTTOM STBD		1
-31	151-31134-53	...FRAME - FUSELAGE STA 100 BOTTOM PORT		1
-32	151-31134-54	...FRAME - FUSELAGE STA 100 BOTTOM STBD		1
-33	151-31134-55	...DOUBLER - FUS STA 100 BOTTOM FRAME PORT		1
	151-31134-56	...DOUBLER - FUS STA 100 BOTTOM FRAME STBD		1
-34	151-31134-7	...ANGLE - FUSELAGE STA 100 BOTTOM PORT		1
-35	151-31134-8	...ANGLE - FUSELAGE STA 100 BOTTOM STBD		1

FIGURE AND INDEX NUMBER	GROUP FUSELAGE MAJOR ASSEMBLY FUSELAGE STA 84-109 COMPLETE BOTTOM FRAME PART NUMBER	1234567 NOMENCLATURE	CODE	UNITS PER ASSY
44 -36	151-31134-31	••WEB - FUSELAGE STA 100 BOTTOM FRAME PORT		1
-37	151-31134-32	••WEB - FUSELAGE STA 100 BOTTOM FRAME STBD		1
-38	151-31453-1	••TRACK - FUSELAGE STA 100 FWD AMO BOX PORT		1
-39	151-31453-2	••TRACK - FUSELAGE STA 100 FWD AMO BOX STBD		1
-40	151-31452-1	••TRACK ASSY - FUSELAGE STA 100 REAR AMMUNITION BOX PORT SIDE		1
-41	151-31452-2	••TRACK ASSY - FUSELAGE STA 100 REAR AMMUNITION BOX STARBOARD SIDE		1
-42	151-31485-1	••STIFFENER - FUS STA 100 OUTBOARD WEB PORT		1
	151-31485-2	••STIFFENER - FUS STA 100 OUTBOARD WEB STBD		1
	151-31736-101	•FRAME ASSY - FUSELAGE STA 109 LOWER	001-210	1
	151-31736-801	•FRAME ASSY - FUSELAGE STA 109 LOWER	211-	1
-43	151-31736-53	••WEB - FUSELAGE STA 109 FRAME		1
-44	151-31736-33	••ANGLE - FUSELAGE STA 109 LOWER FRAME PORT		1
	151-31736-35	••ANGLE - FUSELAGE STA 109 LOWER FRAME STBD		1
-45	140-31035	••BRACKET - AMMUNITION ACC DOOR LOCK REAR		1
	AN3-5A	••BOLT - (BRACKET ATTACHING)		2
	AN365-1032	••NUT -		6
-46	140-31033	••BRACKET - AMMUNITION ACC DOOR CABLE SUP.		6
-47	AN3-5A	••BOLT - (BRACKET ATTACHING)		2
	AN960-10L	••WASHER -		4
	AN365-1032	••NUT -		4
-48	151-31447-1	••TRACK ASSY - FUSELAGE STA 109 AMMUNITION BOX PORT SIDE		4
-49	151-31447-2	••TRACK ASSY - FUSELAGE STA 109 AMMUNITION BOX STARBOARD SIDE		1
-50	151-31736-15	••ANGLE - FUSELAGE STA 109 LOWER FRAME PORT		1
-51	151-31736-16	••ANGLE - FUSELAGE STA 109 LOWER FRAME STBD		1
-52	151-31736-17	••FRAME - FUSELAGE STA 109 LOWER CENTRE		1
-53	151-31736-31	••FRAME - FUSELAGE STA 109 LOWER PORT SIDE	001-210	1
	151-31736-951	••FRAME - FUSELAGE STA 109 LOWER PORT SIDE	211-	1
-54	151-31736-32	••FRAME - FUSELAGE STA 109 LOWER STBD SIDE		1
-55	151-31736-11	••CHANNEL - FUS STA 109 LOWER FRAME PORT		1
	151-31736-12	••CHANNEL - FUS STA 109 LOWER FRAME STBD		1
-56	151-31736-51	••CHANNEL - FUS STA 109 LOWER FRAME PORT		1
	151-31736-52	••CHANNEL - FUS STA 109 LOWER FRAME STBD		1
	151-31736-47	••SEAL - FUSELAGE STA 109 LOWER FRAME (MAKE FROM 7E42A X 26-1/8 (NAA))		1
-57	151-31161-7	•SKIN - FUSELAGE STA 84-109 COMPLETE BOTTOM		1
-58	151-31161-9	•ZED - FUS STA 84-109 COMPLETE BOTTOM PORT		1
-59	151-31161-10	•ZED - FUS STA 84-109 COMPLETE BOTTOM STBD		1
	151-31161-11	•CLIP - FUSELAGE STA 84-109 COMPLETE BOTTOM		1
-60	151-31145-31	•BEAM ASSY - FUSELAGE STA 84-109		1
-61	140-61085	•SPACER - FIXED .50 CALIBRE NOSE GUN AMO BOOSTER MOTOR SUPPORT STA 92 & 100		8
-62	140-61081-1	•SPACER - FIXED .50 CALIBRE NOSE GUN AMO BOOSTER MOTOR SUP. STA 84 PORT SIDE		1
	140-61081-2	•SPACER - FIXED .50 CALIBRE NOSE GUN AMO BOOSTER MOTOR SUP. STA 84 STBD SIDE		1
-63	140-61086	•SPACER - FIXED .50 CAL NOSE GUN AMO BSTR MOTOR SUP. STA 109		2
-64	140-61087	•TUBE - FIXED .50 CAL NOSE GUN AMO BOOSTER MOTOR SUPPORT		2
-65	NAS220-9	•SCREW - (SPACER ATTACHING)		8
	AN960-8	•WASHER -		8
	AN365-832	•NUT -		8
-66	152-31112	•FITTING ASSY - FUSELAGE JACK&PAD TIE-DOWN		1
-67	134-55010	••BUSHING - WING & FUSELAGE JACKING		1
	AN3-5A	•BOLT -		11
	AN3-6A	•BOLT -		8

FIGURE AND INDEX NUMBER	GROUP FUSELAGE MAJOR ASSEMBLY FUSELAGE STA 84-109 COMPLETE BOTTOM FRAME PART NUMBER	1234567 NOMENCLATURE	CODE	UNITS PER ASSY
44 -	AN960-10	•WASHER -		19
	AN365-1032	•NUT -		19
-68	151-31466-15	•INTERCOSTAL - FUSELAGE STA 85-94 JACK PAD INBOARD SUPPORT		1
-69	151-31467-15	•SUPPORT ASSY - FUSELAGE STA 85-94 JACK PAD OUTBOARD		1
-70	151-31464	•ANGLE - FUSELAGE STA 85 N/GR DOOR STOP		1
-71	151-61013-11	•COVER ASSY - FUSELAGE STA 85-93 AMMUNITION BOX HEATING PORT SIDE	001-210	1
	151-61013-21	•COVER ASSY - FUSELAGE STA 85-93 AMMUNITION BOX HEATING PORT SIDE	211-	1
-72	151-61013-12	•COVER ASSY - FUSELAGE STA 85-93 AMMUNITION BOX HEATING STARBOARD SIDE	001-210	1
	151-61013-22	•COVER ASSY - FUSELAGE STA 85-93 AMMUNITION BOX HEATING STARBOARD SIDE	211-	1
-73	151-61014-11	•COVER ASSY - FUSELAGE STA 93-100 AMMUNITION BOX HEATING PORT SIDE	001-210	1
	151-61014-21	•COVER ASSY - FUSELAGE STA 93-100 AMMUNITION BOX HEATING PORT SIDE	211-	1
-74	151-61014-12	•COVER ASSY - FUSELAGE STA 93-100 AMMUNITION BOX HEATING STBD SIDE	001-210	1
	151-61014-22	•COVER ASSY - FUSELAGE STA 93-100 AMMUNITION BOX HEATING STBD SIDE	211-	1
-75	151-61015-11	•COVER ASSY - FUSELAGE STA 100-109 AMMUNITION BOX HEATING PORT SIDE	001-210	1
	151-61015-21	•COVER ASSY - FUSELAGE STA 100-109 AMMUNITION BOX HEATING PORT SIDE	211-	1
-76	151-61015-12	•COVER ASSY - FUSELAGE STA 100-109 AMMUNITION BOX HEATING STBD SIDE	001-210	1
	151-61015-22	•COVER ASSY - FUSELAGE STA 100-109 AMMUNITION BOX HEATING STBD SIDE	211-	1
-77	140-31045-3	LOCK-PLATE - AMMUNITION ACCESS DOOR (SEE FIG. 54)		REF
		-000-		

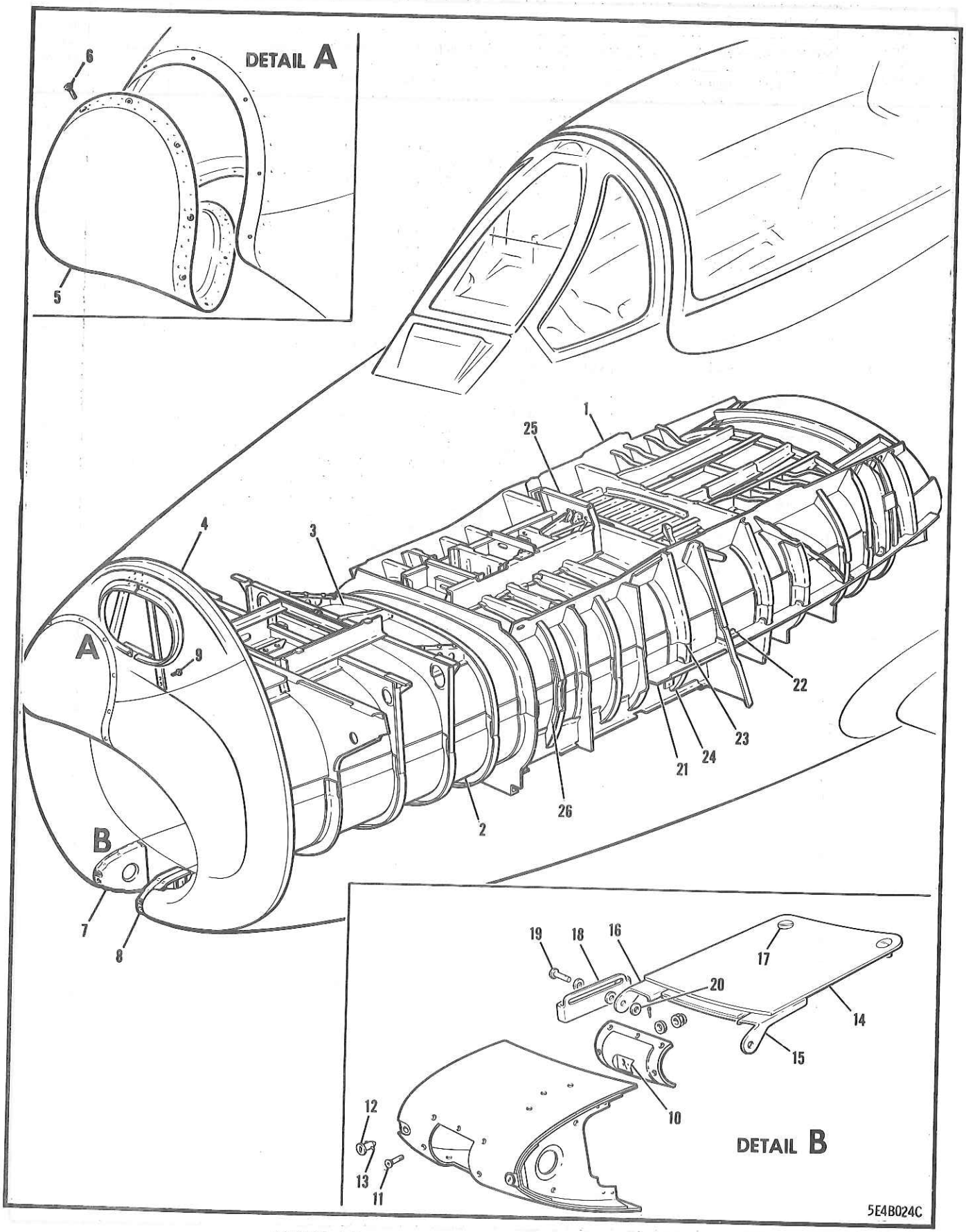

FIGURE 45 FUSELAGE 0-131 AIR INTAKE DUCT

FIGURE AND INDEX NUMBER	GROUP FUSELAGE MAJOR ASSEMBLY FUSELAGE STA 0-131 AIR INTAKE DUCT PART NUMBER	1234567 NOMENCLATURE	CODE	UNITS PER ASSY
45 -	152-31101-801	DUCT ASSY - FUSELAGE STA 0-131 COMPLETE (SEE FIG. 42)		1
- 1	152-31102-40	•DUCT ASSY - FUSELAGE STA 78-126 COMPLETE (SEE FIG. 48)		REF
	152-31101-115	•DUCT ASSY - FUSELAGE STA 15 TO 78		1
- 2	151-31106-81	••DUCT ASSY - FUSELAGE STA 15 TO 78 LOWER (SEE FIG. 46)		REF
- 3	13A-31018	••DUCT ASSY - FUSELAGE STA 15 TO 78 UPPER (SEE FIG. 47)		REF
	151-31150-30	•NOSE ASSY - FUSELAGE STA 0-15 COMPLETE OR		1
	151-31150-40	•NOSE ASSY - FUSELAGE STA 0-15 COMPLETE		REF
- 4	151-31109-70	••FRAME ASSY - FUSELAGE STA 15 (SEE FIG. 50)		1
	172-31003	••FAIRING ASSY - FUSELAGE AIR INTAKE	001-079	1
- 5	172-31005	•••RADOME ASSY - FUSELAGE NOSE	080-	1
	172-31005-10	•••RADOME ASSY - FUSELAGE NOSE		1
- 6	AN509-10R9	•••SCREW -		13
- 7	151-31662	••FORMER ASSY - FUSELAGE NOSE FAIRING GUN CAMERA ACCESS STARBOARD SIDE		1
- 8	151-31650-20	••FORMER ASSY - FUSELAGE NOSE FAIRING GUN CAMERA ACCESS PORT SIDE		1
	151-31667	•••FILLER - FUSELAGE NOSE FAIRING GUN CAMERA ACC FORMER		1
	99833-P.130	•••RECEPTACLE - AIRLOC FASTENER STUD (MKM)		1
- 9	AN3-3A	•BOLT - (ANTENNA SUPPORT ATTACHING)		2
	AN960-10	•WASHER -		2
	AN365-1032	•NUT -		2
	151-66024-10	•DOOR ASSY - FUSELAGE NOSE FAIRING GUN CAMERA ACCESS		1
-10	161-66017	••WINDOW ASSY - FUS NOSE FAIRING GUN CAMERA		1
	161-66016	•••WINDOW - FUSELAGE NOSE FAIR. GUN CAMERA		1
-11	AN509-8R8	••SCREW - (WINDOW ATTACHING)	001-610	7
	AN509-8R6	••SCREW - (WINDOW ATTACHING)	001-610	1
	AN960-8L	••WASHER -	001-610	8
	AN365-832	••NUT -	001-610	7
	AN364-832	••NUT -	001-610	1
-12	98292-6-560	••STUD - WING TYPE ROUNDHEAD AIRLOC FASTENER (MKM)		2
-13	99836	••CROSS-PIN - AIRLOC FASTENER (MKM)		2
	161-31495	•DOOR ASSY - FUS STA 16-24 GUN CAMERA ACC		1
	161-31495-9	••DOOR ASSY - (GUN CAMERA ACCESS)		1
-14	161-31495-3	•••DOOR - (GUN CAMERA ACCESS)		1
	161-31495-5	•••DOUBLER - (GUN CAMERA ACCESS DOOR)		1
-15	161-31500-1	••HINGE - FUSELAGE STA 16 GUN CAMERA DOOR SLIDING HALF PORT SIDE		1
-16	161-31500-2	••HINGE - FUSELAGE STA 16 GUN CAMERA DOOR SLIDING HALF STARBOARD SIDE		1
	161-31495-11	••PLATE - FUSELAGE STA 16-24 GUN CAMERA DOOR		2
	161-31495-13	••SHIM - FUSELAGE STA 16-24 GUN CAMERA DOOR		1
	161-31495-7	••STRIP - FUS STA 16-24 GUN CAMERA DOOR		4
	NAS42C5-6	••SPACER -		4
	2W1C11-14-64	••WASHER - PLAIN (NAA)		2
-17	99834-1-140	••STUD - FLUSH HEAD AIRLOC FASTENER (MKM)		2
	99836	••CROSS-PIN - AIRLOC FASTENER (MKM)		1
	151-31570-1	•CLIP - FUSELAGE STA 16-24 GUN CAMERA DOOR HINGE PORT SIDE		1
-18	151-31570-2	•CLIP - FUSELAGE STA 16-24 GUN CAMERA DOOR HINGE STARBOARD SIDE		1

FIGURE AND INDEX NUMBER	GROUP FUSELAGE MAJOR ASSEMBLY FUSELAGE STA 0-131 AIR INTAKE DUCT PART NUMBER	1234567 NOMENCLATURE	CODE	UNITS PER ASSY
45 -19	AN393-13	•PIN - (HINGE TO CLIP ATTACHING)		2
	AN960C10L	•WASHER -		2
-20	AN960C10	•WASHER -		4
	AN380C2-2	•COTTER-PIN -		2
-21	151-31152-1	•WEB ASSY - FUSELAGE STA 72-85 DUCT HOR SHEAR PORT SIDE		1
	151-31152-2	•WEB ASSY - FUSELAGE STA 72-85 DUCT HOR SHEAR STARBOARD SIDE		1
-22	151-31617-7	•CLIP - FUSELAGE FWD HORIZONTAL SHEAR WEB TO DUCT ATT PORT SIDE		1
	151-31617-8	•CLIP - FUSELAGE FWD HORIZONTAL SHEAR WEB TO DUCT ATT STARBOARD SIDE		1
-23	151-31177-5	•FRAME - FUSELAGE STA 78 DUCT PORT SIDE		1
	151-31177-6	•FRAME - FUSELAGE STA 78 DUCT STBD SIDE		1
	NAS45-6-4	•PANEL ASSY - ELECTRICAL CONNECTOR		1
	AN515-4R6	•SCREW - (ATT TERMINAL PANEL TO FRAME)		2
	AN365-440	•NUT -		2
-24	151-31177-7	•FRAME - FUSELAGE STA 78 DUCT LOWER		1
	151-31177-25	•FRAME ASSY - FUSELAGE STA 78 DUCT UPPER		1
-25	151-31177-21	••FRAME - FUSELAGE STA 78 DUCT UPPER		1
	151-31177-19	••FRAME - FUSELAGE STA 78 DUCT UPPER		1
	AN515-8R8	••SCREW - (ATT -19 FRAME TO -21 FRAME)		4
-26	151-31175-29	•DOUBLER - FUSELAGE STA 58 DUCT		1

-000-

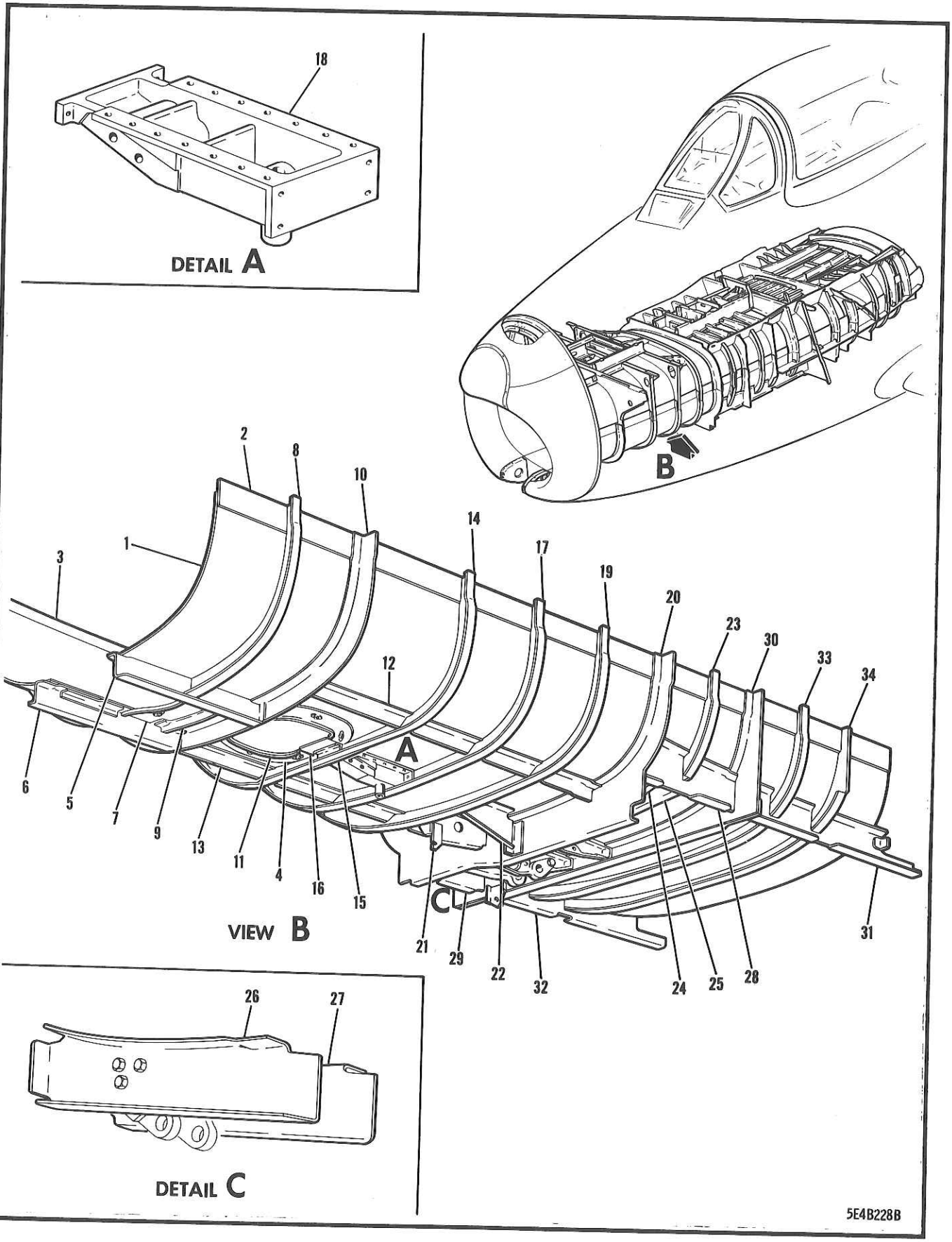

FIGURE 46 FUSELAGE STA 15-78 LOWER DUCT

FIGURE AND INDEX NUMBER	GROUP FUSELAGE MAJOR ASSEMBLY FUSELAGE STA 15-78 LOWER DUCT PART NUMBER	1234567 NOMENCLATURE	CODE	UNITS PER ASSY
46 -	151-31106-81	DUCT ASSY - FUSELAGE STA 15-78 LOWER (SEE FIG. 45)		1
	151-31106-21	•DUCT ASSY - FUSELAGE STA 15-78 LOWER		1
- 1	151-31106-3	••SKIN - FUSELAGE STA 15-78 LOWER DUCT		1
- 2	151-31106-5	••SPLICE - FUS STA 15-78 LWR DUCT PORT SIDE		1
- 3	151-31106-6	••SPLICE - FUS STA 15-78 LWR DUCT STBD SIDE		1
	151-31106-7	••DOUBLER - FUSELAGE STA 53-63 LOWER DUCT		1
- 4	151-31179	••SUPPORT ASSY - FUS STA 27-35 DUCT DOOR		1
- 5	151-31497	•INTERCOSTAL ASSY - FUSELAGE STA 15-27 DOOR SUPPORTING PORT SIDE		1
- 6	151-31498	•INTERCOSTAL ASSY - FUSELAGE STA 15-27 DOOR SUPPORTING STARBOARD SIDE		1
- 7	151-31499	•DOUBLER ASSY - FUSELAGE STA 22-25 CAMERA ACCESS SUP. DOOR		1
	99833-P.130	••RECEPTACLE - AIRLOC FASTENER STUD (MKM)		2
- 8	151-31172-5	•FRAME - FUSELAGE STA 21 DUCT LWR PORT SIDE		1
	151-31172-7	•FRAME - FUSELAGE STA 21 DUCT LWR STBD SIDE		1
- 9	151-31651	•ANGLE - FUS STA 25 LOWER DUCT CAMERA DOOR		1
-10	151-31106-9	•ANGLE - FUSELAGE STA 27 LOWER DUCT		1
-11	151-31708-10	•DOOR ASSY - FUSELAGE STA 26-35 DUCT		1
	NAS205-9	•SCREW - (DOOR ATTACHING)		7
-12	151-31653	•SUPPORT - FUSELAGE STA 27-63 TRUNNION BEAM DUCT PORT SIDE		1
-13	151-31654	•SUPPORT - FUSELAGE STA 27-63 TRUNNION BEAM DUCT STBD SIDE		1
-14	151-31173-7	•FRAME - FUSELAGE STA 35 DUCT LOWER		1
-15	151-31173-9	•ANGLE - FUSELAGE STA 35 DUCT LOWER		1
-16	151-31106-17	•ANGLE - FUSELAGE STA 35 DUCT LOWER		1
-17	151-31116-27	•FRAME ASSY - FUSELAGE STA 41 DUCT LOWER		1
	151-31116-3	••FRAME - FUSELAGE STA 41 DUCT LOWER		1
	151-34633	••GUARD - NOSE GEAR STEERING ACTUATING PULLEY PORT SIDE		1
	151-34634	••GUARD - NOSE GEAR STEERING ACTUATING PULLEY STARBOARD SIDE		1
-18	151-34659	•BRACKET - NOSE GEAR STEERING CLUTCH SUP.		1
-19	151-31174-7	•FRAME ASSY - FUSELAGE STA 47 DUCT LOWER		1
-20	151-31117-41	•FRAME ASSY - FUSELAGE STA 53 DUCT LOWER		1
	140-58442	••CLIP - HYDRAULIC FAIRING DOOR HOSE SUP.		1
-21	151-31673	•INTERCOSTAL ASSY - FUSELAGE STA 48-54 DUCT SPRING SUPPORTING		1
	AN3-5A	•BOLT - (INTERCOSTAL TO FRAME ATTACHING)		2
	AN960D10	•WASHER -		2
	AN365-1032	•NUT -		2
	151-31106-15	•ANGLE - FUSELAGE STA 54 LOWER DUCT (INTERCOSTAL TO FRAME ATTACHING)		1
-22	151-31672	•INTERCOSTAL - FUSELAGE STA 48-54 DUCT STEERING CABLE SUPPORTING		1
-23	151-31175-35	•FRAME ASSY - FUSELAGE STA 58 DUCT LWR PORT		1
	151-31175-15	•FRAME ASSY - FUSELAGE STA 58 DUCT LWR STBD		1
-24	151-31641-3	•CHANNEL - FUS STA 58 DUCT LOWER PORT SIDE		1
-25	151-31641-5	•CHANNEL - FUS STA 58 DUCT LOWER PORT SIDE		1
-26	151-31642-3	•CHANNEL - FUS STA 58 DUCT LOWER STBD SIDE		1
-27	151-31642-5	•CHANNEL - FUS STA 58 DUCT LOWER STBD SIDE		1
-28	151-31655	•INTERCOSTAL - FUSELAGE STA 54-63 BOTTOM WHEEL WELL SUPPORT PORT SIDE		1
-29	151-31657-3	•INTERCOSTAL - FUSELAGE STA 54-63 BOTTOM WHEEL WELL SUPPORT STARBOARD SIDE		1
	151-31106-11	•CLIP - FUSELAGE STA 58 LOWER DUCT PORT		1
	151-31106-12	•CLIP - FUSELAGE STA 58 LOWER DUCT STBD		1
-30	151-31121-11	•FRAME ASSY - FUSELAGE STA 63 DUCT LOWER		1

FIGURE AND INDEX NUMBER	GROUP FUSELAGE MAJOR ASSEMBLY FUSELAGE STA 15-78 LOWER DUCT PART NUMBER	1234567 NOMENCLATURE	CODE	UNITS PER ASSY
46 -	151-31121-13	••FRAME - FUSELAGE STA 63 DUCT LOWER		1
	151-31137	••CHANNEL - FUSELAGE STA 63 LOWER DUCT FRAME REINFORCING		1
	151-58301	••CLIP - HYDRAULIC NOSE GEAR OPR CYL HOSE		1
-31	151-31182-9	•INTERCOSTAL ASSY - FUSELAGE STA 63-78 BOT. WHEEL WELL SUPPORTING PORT SIDE		1
-32	151-31182-10	•INTERCOSTAL ASSY - FUSELAGE STA 63-78 BOT. WHEEL WELL SUPPORTING STARBOARD SIDE		1
-33	151-31176-9	•FRAME - FUSELAGE STA 67 DUCT LOWER		1
-34	151-31122-13	•STIFFENER - FUSELAGE STA 72 DUCT LOWER		1
		(CONTINUED SEE SECTION 4)		

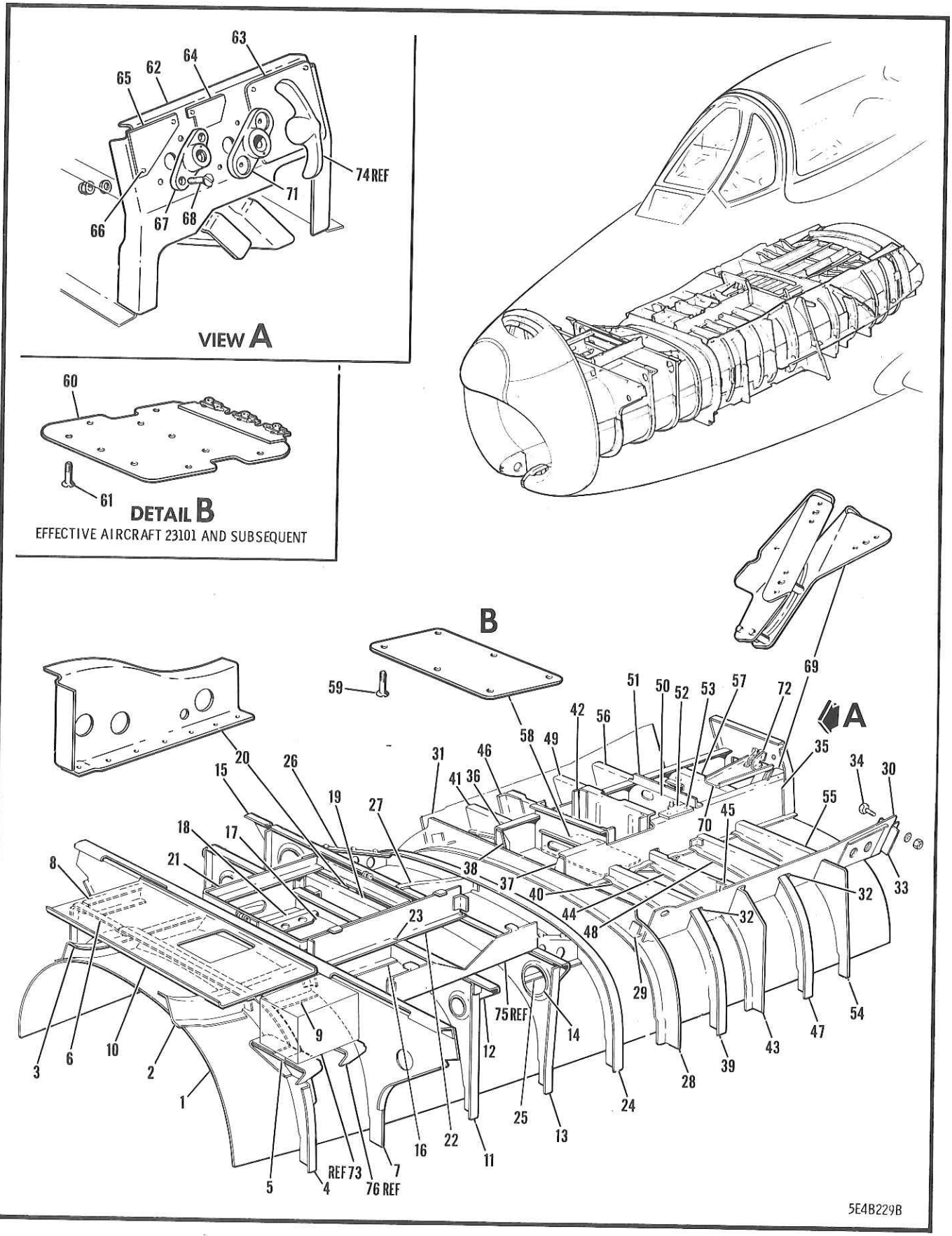

FIGURE 47 FUSELAGE STA 15-78 UPPER DUCT

FIGURE AND INDEX NUMBER	GROUP FUSELAGE MAJOR ASSEMBLY FUSELAGE STA 15-78 UPPER DUCT PART NUMBER	1234567 NOMENCLATURE	CODE	UNITS PER ASSY
47 -	13A-31018	DUCT ASSY - FUSELAGE STA 15-78 UPPER (SEE FIG. 45)		1
- 1	13A-31018-39	•SKIN - FUSELAGE STA 15-78 UPPER DUCT		1
- 2	151-31197-1	•INTERCOSTAL - FUSELAGE STA 15-21 DUCT FRAME PORT SIDE		1
- 3	151-31197-2	•INTERCOSTAL - FUSELAGE STA 15-21 DUCT FRAME STBD SIDE		1
- 4	151-31172-27	•FRAME ASSY - FUSELAGE STA 21 DUCT UPPER		1
- 5	170-74024	••SUPPORT ASSY - VOLTAGE RGLR FUS STA 21		1
- 6	170-31110	••SUPPORT ASSY - FUSELAGE STA 21 FRAME		1
- 7	170-31112-51	•FRAME ASSY - FUSELAGE STA 27 UPPER DUCT		1
- 8	170-31111	•INTERCOSTAL - FUSELAGE STA 21-27 DUCT FRA		1
- 9	151-31198-3	•INTERCOSTAL - FUSELAGE STA 21-27 DUCT FRAME PORT SIDE		1
	151-31198-4	•INTERCOSTAL - FUSELAGE STA 21-27 DUCT FRAME STBD SIDE		1
-10	13A-31018-53	•PLATE - FUSELAGE STA 16-26 UPPER DUCT		1
-11	151-31173-51	•FRAME ASSY - FUSELAGE STA 35 UPPER DUCT		1
-12	151-31173-13	••SUPPORT - FRAME (FUSELAGE STA 35)		1
-13	151-31116-25	•FRAME ASSY - FUS STA 42 UPPER DUCT		1
-14	151-31116-29	••GUARD - FRAME ASSY (FUS STA 42)		1
-15	170-74030	••BRACKET ASSY - AN/APG30 RADAR RANGE POWER SUPPORT		1
-16	170-31199-801	•INTERCOSTAL - FUS STA 27-35 DUCT FRAME PORT SIDE		1
	170-31199-802	•INTERCOSTAL - FUS STA 27-35 DUCT FRAME PORT SIDE		1
-17	170-54089	•INSULATOR - ELECTRICAL BATTERY RELAY		1
-18	13A-31018-58	•BRACKET - FUS STA 15-78 UPPER DUCT STBD		1
	13A-31018-57	•BRACKET - FUS STA 15-78 UPPER DUCT PORT		1
	13A-31018-59	•CLIP - FUSELAGE STA 15-78 UPPER DUCT		2
-19	170-31196-800	•SUPPORT ASSY - FUS STA 35 DUCT FRAME BAT.		1
	13A-31018-43	•CLIP - FUSELAGE STA 35 UPPER DUCT		2
-20	170-31490-3	•INTERCOSTAL - FUSELAGE STA 35-42 DUCT FRA		1
-21	170-54443	•SUPPORT ASSY - AN3150 BATTERY		1
	AN509-10-9	•SCREW -		4
-22	170-74027-2	•SUPPORT ASSY - TYPE AICM GUNSIGHT AMPL		1
-23	AN515-8R7	•SCREW - (SUPPORT ATTACHING)		4
	AN960D8L	•WASHER -		4
-24	151-31174-1	•FRAME ASSY - FUSELAGE STA 48 DUCT UPPER		1
-25	170-74067-1	•BRACKET ASSY - FUSELAGE STA 42-48 RADAR TERM. COVER SUP. PORT SIDE		1
-26	170-74067-2	•BRACKET ASSY - FUSELAGE STA 42-48 RADAR TERM. COVER SUP. STBD SIDE		1
-27	151-31491	•INTERCOSTAL - FUSELAGE STA 42-48 DUCT FRA		1
-28	151-31117-31	•FRAME ASSY - FUS STA 54 UPPER DUCT		1
-29	151-31658	•FITTING - FUSELAGE STA 54 ARMOUR-PLATE LOWER SUPPORT		2
-30	151-31181-31	•INTERCOSTAL ASSY - FUSELAGE STA 54-78 PRESSURE WEB SUPPORT PORT SIDE		1
-31	151-31181-2	•INTERCOSTAL ASSY - FUSELAGE STA 54-78 PRESSURE WEB SUPPORT STARBOARD SIDE		1
-32	151-31181-11	••CLIP - INTERCOSTAL TO FRAME OUTBOARD (FUS STA 58 & 67 PORT SIDE)		2
	151-31181-9	••CLIP - INTERCOSTAL TO FRAME INBOARD (FUSELAGE STA 58 & 67 PORT SIDE)		2
	151-31181-10	••CLIP - INTERCOSTAL TO FRAME INBOARD (FUSELAGE STA 58 & 67 STBD SIDE)		2
	151-31181-12	••CLIP - INTERCOSTAL TO FRAME OUTBOARD (FUSELAGE STA 58 & 67 STBD SIDE)		2

FIGURE AND INDEX NUMBER	GROUP FUSELAGE MAJOR ASSEMBLY FUSELAGE STA 15-78 UPPER DUCT PART NUMBER	1234567 NOMENCLATURE	CODE	UNITS PER ASSY
47 -33	151-31181-7	••CLIP - INTERCOSTAL TO FRAME OUTBOARD (FUSELAGE STA 78 PORT SIDE)		1
	151-31181-5	••CLIP - INTERCOSTAL TO FRAME INBOARD (FUSELAGE STA 78 PORT SIDE)		1
	151-31181-6	••CLIP - INTERCOSTAL TO FRAME INBOARD (FUSELAGE STA 78 STARBOARD SIDE)		1
	151-31181-8	••CLIP - INTERCOSTAL TO FRAME OUTBOARD (FUSELAGE STA 78 STARBOARD SIDE)		1
-34	AN3-4A	••BOLT - (CLIP ATTACHING)		6
	AN960-10	••WASHER -		6
	AN365-1032	••NUT -		6
-35	152-31180-19	•INTERCOSTAL ASSY - FUSELAGE STA 54-78 PEDESTAL SUP. PORT SIDE		1
-36	152-31180-20	•INTERCOSTAL ASSY - FUSELAGE STA 54-78 PEDESTAL SUP. STBD SIDE		1
-37	13A-31018-51	•CLIP - FUSELAGE STA 54 UP. DUCT PORT SIDE		1
-38	13A-31018-52	•CLIP - FUSELAGE STA 54 UP. DUCT STBD SIDE		1
-39	151-31175-33	•FRAME ASSY - FUS STA 58 UPPER DUCT PORT		1
	151-31175-6	•FRAME ASSY - FUS STA 58 UPPER DUCT STBD		1
-40	151-31175-3	.FRAME ASSY - FUS STA 58 UPPER DUCT PORT		1
-41	151-31175-4	.FRAME ASSY - FUS STA 58 UPPER DUCT STBD		1
-42	151-31175-40	•FRAME ASSY - FUSELAGE STA 58 DUCT UP. CTR		1
-43	151-31121-5	•FRAME - FUSELAGE STA 63 DUCT UP. PORT SIDE		1
	151-31121-6	•FRAME - FUSELAGE STA 63 DUCT UP. STBD SIDE		1
-44	151-31121-30	•FRAME ASSY - FUSELAGE STA 63 DUCT UP. CTR		1
-45	151-31443-1	••FITTING - FUS STA 63 UPPER DUCT ATT PORT		1
-46	151-31443-2	••FITTING - FUS STA 63 UPPER DUCT ATT STBD		1
-47	151-31176-7	•FRAME - FUSELAGE STA 67 DUCT UP. PORT SIDE		1
	151-31176-8	•FRAME - FUSELAGE STA 67 DUCT UP. STBD SIDE		1
-48	151-31176-15	•FRAME ASSY - FUS STA 67 UPPER DUCT PORT		1
-49	151-31176-36	•FRAME ASSY - FUS STA 67 UPPER DUCT STBD		1
-50	151-31176-40	•FRAME ASSY - FUSELAGE STA 67 DUCT UP. CTR		1
-51	13A-31018-19	•ANGLE - FUSELAGE STA 67 UPPER DUCT		1
	AN3-4A	•BOLT - (ANGLE ATTACHING)		1
	AN960-10	•WASHER -		2
	AN365-1032	•NUT -		2
-52	140-33646	•BRACKET ASSY - LANDING GEAR EMY RELEASE FUS STA 66 IDLER		2
	2S1-3	•SHIM - BASKET NUT (NAA)		1
-53	AN509-8R12	•SCREW -		1
-54	151-31122-5	•STIFFENER - FUSELAGE STA 72 DUCT PORT SIDE		2
	151-31122-6	•STIFFENER - FUSELAGE STA 72 DUCT STBD SIDE		1
-55	151-31122-17	•INTERCOSTAL ASSY - FUS STA 72 DUCT PORT		1
-56	151-31122-18	•INTERCOSTAL ASSY - FUS STA 72 DUCT STBD		1
-57	151-31122-25	•INTERCOSTAL ASSY - FUSELAGE STA 72 UP. CTR		1
-58	13A-31018-27	•COVER - ELECTRICAL DISCONNECT PLUG ACCESS	001-100	1
-59	AN509-10-7	•SCREW - (COVER ATTACHING)	001-100	6
	13-31011	•DOOR INSTL - ELECTRICAL PRESSURE DISC. PLUG INSPECTION	101-	NP
-60	13-31011-965	••DOOR ASSY - ELECTRICAL DISC. PLUG INSP	101-	1
-61	AN509-10-7	••SCREW -	101-	13
	172-54109	•PANEL ASSY - CENTRE ELEC PEDESTAL LOWER		1
-62	172-54109-3	••PANEL - CENTRE ELEC PEDESTAL LOWER		1
-63	176-33642	••PLATE - LANDING GEAR EMY OPR PROCEDURE		1
-64	176-33650	••NAME-PLATE - LANDING GEAR EMY REL HANDLE		1
-65	172-31897	••NAME-PLATE - CANOPY RELEASE HANDLE INSIDE		1
-66	AN535-2-3	••SCREW - (NAME-PLATE ATTACHING)		2
-67	140-31843	••BASE - FUS STA 78 CANOPY EMY REL HANDLE		1
-68	AN509-8R9	••SCREW - (BASE ATTACHING)		2
	AN960D8	••WASHER -		2

FIGURE AND INDEX NUMBER	GROUP FUSELAGE MAJOR ASSEMBLY FUSELAGE STA 15-78 UPPER DUCT PART NUMBER	1234567 NOMENCLATURE	CODE	UNITS PER ASSY
47 -	AN365-832	••NUT -		2
-69	151-31842-9	•BRACKET ASSY - FUSELAGE STA 78 CANOPY EMY RELEASE PULLEY		1
-70	152-31176-3	•INTERCOSTAL - FUSELAGE STA 72-78 BRKT SUP•		1
-71	140-33614	•RECEPTACLE - LANDING GEAR EMY REL HANDLE		1
-72	140-33602	•BRACKET ASSY - LANDING GEAR EMERGENCY RELEASE PEDESTAL PULLEY		1
-73	CN-112/APG-30	REGULATOR - VOLTAGE (SEE SECTION 19)		REF
-74	120-33548	HANDLE ASSY - MAIN LDG GEAR EMY DOWN CTL (SEE SECTION 4)		REF
-75	170-74027-1	SUPPORT ASSY - TYPE AICM GUNSIGHT AMPL (SEE FIG• 39)		REF
-76	170-74025	SUPPORT ASSY - VOLTAGE RGLR FUS STA 27 (SEE FIG• 39)		REF
		-000-		

(CONTINUED)

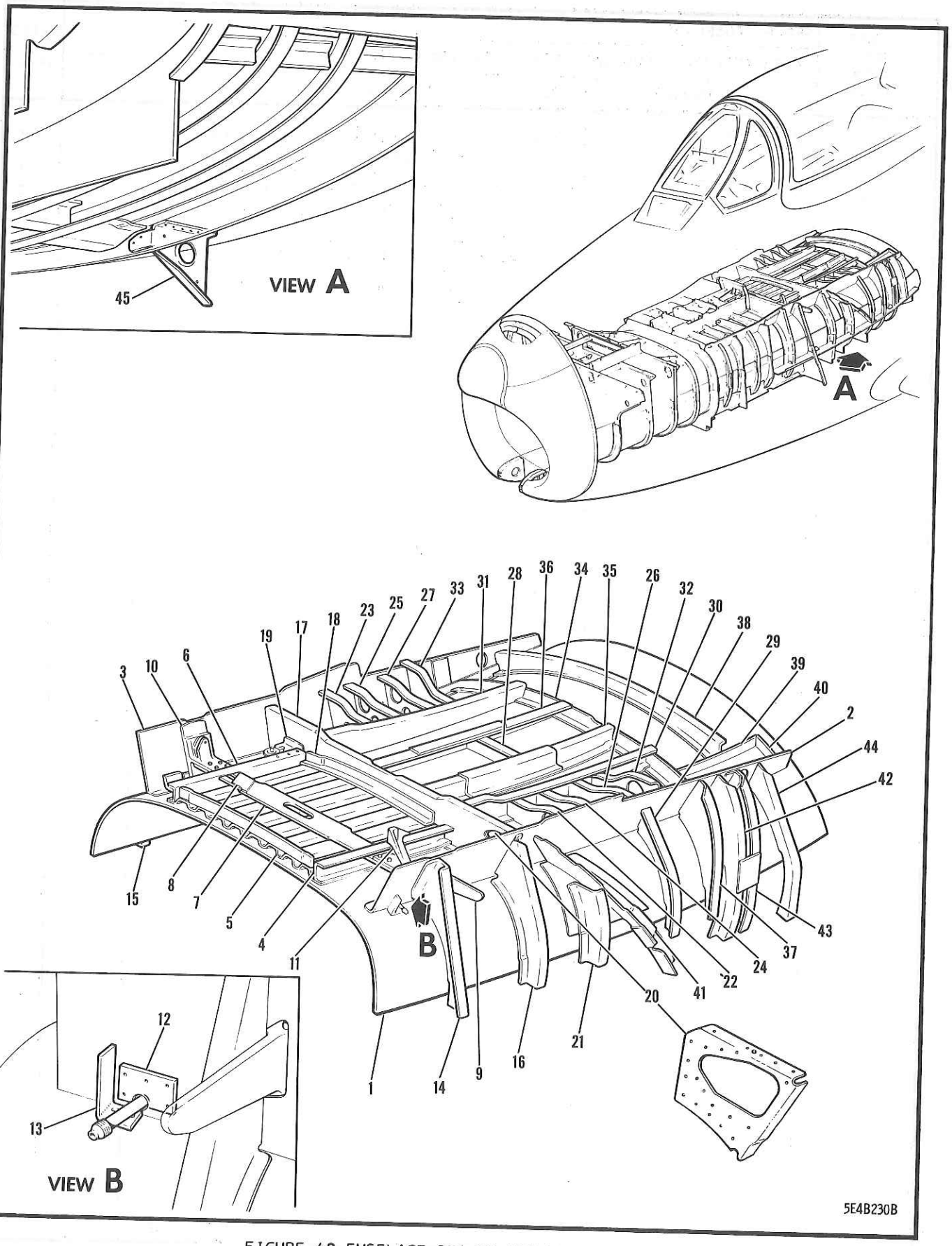

FIGURE 48 FUSELAGE STA 78-131 UPPER DUCT

FIGURE AND INDEX NUMBER	GROUP FUSELAGE MAJOR ASSEMBLY FUSELAGE STA 78-131 UPPER DUCT PART NUMBER	1234567 NOMENCLATURE	CODE	UNITS PER ASSY
48 -	152-31102-40	DUCT ASSY - FUSELAGE STA 78-126 COMPLETE (SEE FIG. 45)		1
	152-31104	•DUCT ASSY - FUSELAGE STA 78-128 LOWER (SEE FIG. 49)		REF
	151-31103-81	•DUCT ASSY - FUSELAGE STA 78-131 UPPER		1
- 1	151-31103-25	••SKIN - FUSELAGE STA 78-131 UPPER DUCT		1
- 2	151-31190-1	••INTERCOSTAL ASSY - FUSELAGE STA 78-127 PRESS. WEB SUPPORT PORT SIDE		1
- 3	151-31190-20	••INTERCOSTAL ASSY - FUSELAGE STA 78-127 PRESS. WEB SUPPORT STARBOARD SIDE		1
- 4	151-31189	••INTERCOSTAL ASSY - FUSELAGE STA 78-93 BP 7 UPPER DUCT SUPPORTING PORT SIDE		1
- 5	151-31188-3	••STIFFENER - FUSELAGE STA 78-93 UPPER DUCT		1
- 6	151-31187	••INTERCOSTAL ASSY - FUSELAGE STA 78-93 BP 7 UPPER DUCT SUPPORTING STBD SIDE		1
- 7	151-31103-21	••STRIP - FUSELAGE STA 85 UPPER DUCT		1
- 8	151-31103-23	••STRIP - FUSELAGE STA 85 UPPER DUCT		1
- 9	151-52103-1	••SUPPORT - PILOT CONTROL STICK HINGE PORT		3
	AN4-6A	••BOLT - (SUPPORT TO STRAP ATT PORT SIDE)		3
	AN960-416L	••WASHER -		3
	AN365-428	••NUT -		1
-10	151-52103-2	••SUPPORT - PILOT CONTROL STICK HINGE STBD		4
	AN4-6A	••BOLT - (SUPPORT TO STRAP ATT STBD SIDE)		4
	AN960-416L	••WASHER -		4
	AN365-428	••NUT -		1
-11	140-52332	••STOP - AILERON CONTROL (STARBOARD SIDE)		2
	AN3-5A	••BOLT - (STOP TO INTERCOSTAL ATT)		2
	AN960-10	••WASHER -		2
	AN365-1032	••NUT -		1
	AN4-10A	••BOLT - (STOP TO SUPPORT ATT)		1
	AN960-416L	••WASHER -		1
	AN365-428	••NUT -		2
-12	172-31853	••FITTING ASSY - COCKPIT ENCLOSURE FUSELAGE STA 82 DRAIN		1
	172-31854	•••FITTING - COCKPIT ENCL FUS STA 82 DRAIN		1
-13	151-31103-9	••CLIP - FUSELAGE STA 81-82 UPPER DUCT PORT		1
	151-31103-10	••CLIP - FUSELAGE STA 81-82 UPPER DUCT STBD		1
-14	151-31126-7	••STIFFENER - FUSELAGE STA 85 DUCT FRAME LH		1
-15	151-31126-8	••STIFFENER - FUSELAGE STA 85 DUCT FRAME RH		1
-16	151-31129-5	••FRAME ASSY - FUSELAGE STA 93 DUCT PORT		1
	151-31129-6	••FRAME ASSY - FUSELAGE STA 93 DUCT STBD		1
-17	151-31129-31	••FRAME ASSY - FUSELAGE STA 93 DUCT CENTRE		1
-18	151-31103-7	••ANGLE - FUSELAGE STA 93 UPPER DUCT		1
-19	140-31841	••BRACKET ASSY - FUSELAGE STA 93 CANOPY EMY RELEASE PULLEY (STARBOARD SIDE)		1
	170-31478	••SUPPORT ASSY - FUSELAGE STA 93 UPPER DUCT FRAME ATTACHING STARBOARD SIDE		2
	AN3-5A	••BOLT - (SUP. TO INTERCST ATT STBD SIDE)		2
	AN960A10	••WASHER -		2
	AN365-1032	••NUT -		1
-20	151-31477	••DOUBLER ASSY - FUSELAGE STA 93 UPPER DUCT FRAME PORT SIDE		2
	AN3-5A	••BOLT - (DBLR TO INTERCST ATT PORT SIDE)		2
	AN960A10	••WASHER -		2
	AN365-1032	••NUT -		1
	151-31675	••ANGLE - FUSELAGE STA 93 INTERCOSTAL TO FRAME STIFFENER PORT SIDE		1
-21	151-31133-5	••FRAME ASSY - FUSELAGE STA 100 DUCT UPPER OUTBOARD PORT SIDE		1
	151-31133-6	••FRAME ASSY - FUSELAGE STA 100 DUCT UPPER OUTBOARD STARBOARD SIDE		1

FIGURE AND INDEX NUMBER	GROUP FUSELAGE MAJOR ASSEMBLY FUSELAGE STA 78-131 UPPER DUCT PART NUMBER	1234567 NOMENCLATURE	CODE	UNITS PER ASSY
48 -22	151-31133-19	••FRAME ASSY - FUSELAGE STA 100 DUCT UPPER INBOARD PORT SIDE		1
-23	151-31133-21	••FRAME ASSY - FUSELAGE STA 100 DUCT UPPER INBOARD STARBOARD SIDE		1
-24	170-31158-953	••SUPPORT - FUSELAGE STA 103 & 107 DUCT INTERMEDIATE PORT SIDE		1
-25	170-31158-954	••SUPPORT - FUSELAGE STA 103 & 107 DUCT INTERMEDIATE STARBOARD SIDE		1
-26	170-31158-951	••SUPPORT - FUSELAGE STA 103 & 107 DUCT INTERMEDIATE PORT SIDE		1
-27	170-31158-952	••SUPPORT - FUSELAGE STA 103 & 107 DUCT INTERMEDIATE STARBOARD SIDE		1
-28	151-31649	••FRAME - FUSELAGE STA 106 UPPER DUCT		1
-29	151-31135-5	••FRAME ASSY - FUSELAGE STA 109 DUCT PORT		1
	151-31135-6	••FRAME ASSY - FUSELAGE STA 109 DUCT STBD		1
	AN3-4A	••BOLT - (FRAME TO INTERCST ATT STA 109)		2
	AN3-5A	••BOLT - (FRAME TO INTERCST ATT STA 109)		2
	AN960-A10	••WASHER -		2
	AN365-1032	••NUT -		4
-30	170-31192-1	••INTERCOSTAL ASSY - FUSELAGE STA 93-117 OUTBOARD FLOOR SUPPORTING PORT SIDE		1
-31	170-31192-2	••INTERCOSTAL ASSY - FUSELAGE STA 93-117 OUTBOARD FLOOR SUPPORTING STBD SIDE		1
-32	151-31135-19	••FRAME ASSY - FUSELAGE STA 109 DUCT PORT		1
-33	151-31135-20	••FRAME ASSY - FUSELAGE STA 109 DUCT STBD		1
-34	151-31193	••FRAME - FUSELAGE CANTED STA 118 DUCT		1
-35	151-31191-11	••INTERCOSTAL ASSY - FUSELAGE STA 93-117 INBOARD DUCT PORT SIDE		1
-36	151-31191-12	••INTERCOSTAL ASSY - FUSELAGE STA 93-117 INBOARD DUCT STARBOARD SIDE		1
-37	151-31183-11	••FRAME ASSY - FUSELAGE STA 114 DUCT PORT		1
	151-31183-12	••FRAME ASSY - FUSELAGE STA 114 DUCT STBD		1
-38	151-31185-7	••FRAME ASSY - FUSELAGE STA 121 DUCT		1
-39	151-31103-17	••ANGLE - FUSELAGE STA 121 UPPER DUCT PORT		1
-40	151-31103-19	••ANGLE - FUSELAGE STA 126 UPPER DUCT PORT		1
-41	151-31159-3	•ANGLE - UPPER CANTED GUN TRUNNION WEB TO DUCT PORT SIDE		1
	151-31159-4	•ANGLE - UPPER CANTED GUN TRUNNION WEB TO DUCT STARBOARD SIDE		1
	151-31704-3	•ANGLE - FUSELAGE CANTED GUN TRUNNION WEB TO DUCT LOWER PORT SIDE		1
	151-31704-4	•ANGLE - FUSELAGE CANTED GUN TRUNNION WEB TO DUCT LOWER STARBOARD SIDE		1
-42	151-31184-1	•FRAME ASSY - FUS STA 116 DUCT PORT SIDE		1
	151-31184-2	•FRAME ASSY - FUS STA 116 DUCT STBD SIDE		1
	151-31664-1	•CLIP - FUSELAGE STA 116 HORIZONTAL SHEAR WEB TO DUCT FRAME ATT PORT SIDE		1
	151-31664-2	•CLIP - FUSELAGE STA 116 HORIZONTAL SHEAR WEB TO DUCT FRAME ATT STBD SIDE		1
-43	152-31186-9	•FRAME ASSY - FUS STA 119 DUCT PORT SIDE		1
	152-31186-10	•FRAME ASSY - FUS STA 119 DUCT STBD SIDE		1
-44	151-31185-11	•FRAME ASSY - FUS STA 121 DUCT PORT SIDE		1
	151-31185-12	•FRAME ASSY - FUS STA 121 DUCT STBD SIDE		1
-45	151-31647	•INTERCOSTAL - CANTED STA 126 TO CANTED STA 127 LOWER DUCT		1

-000-

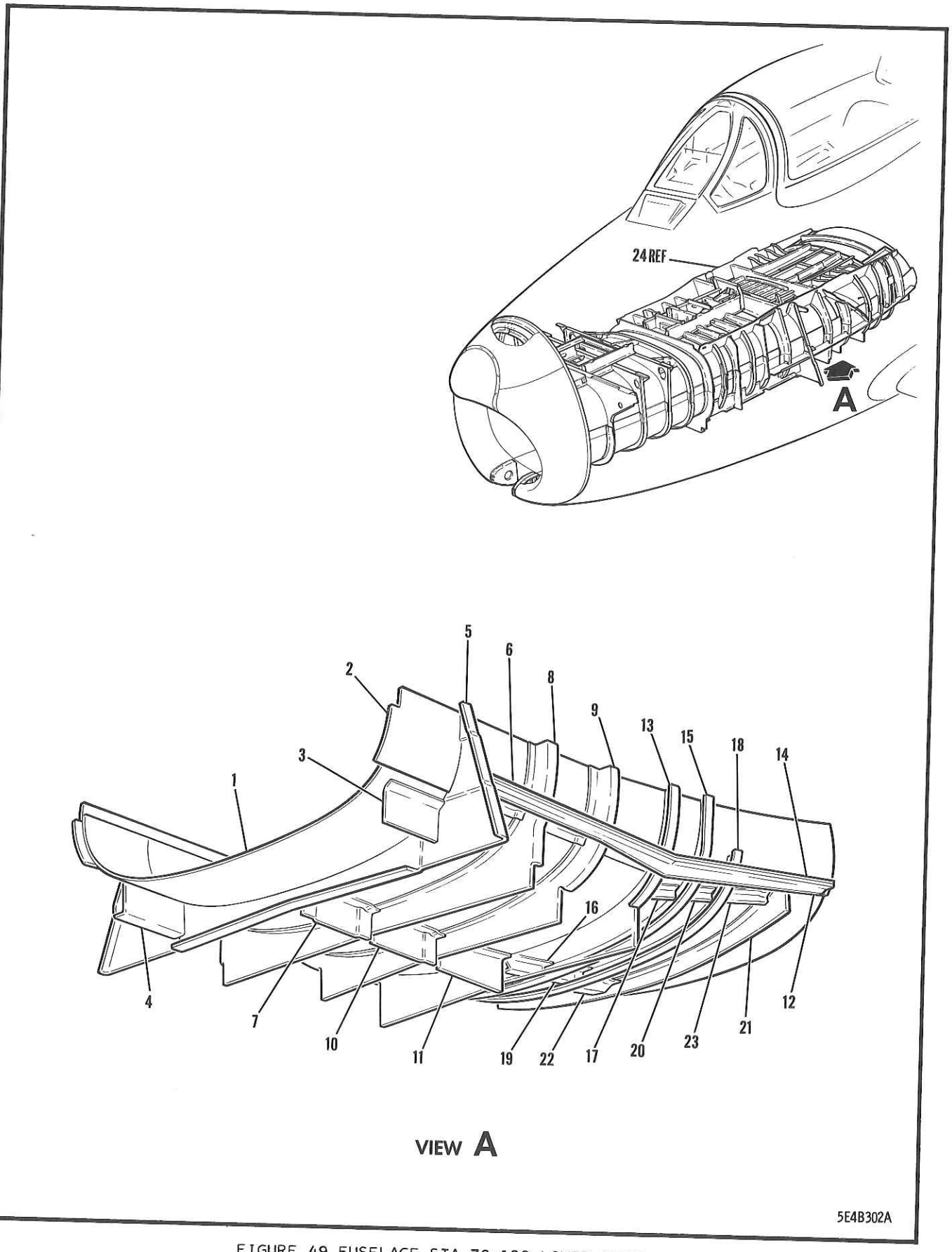

FIGURE 49 FUSELAGE STA 78-128 LOWER DUCT

FIGURE AND INDEX NUMBER	GROUP FUSELAGE MAJOR ASSEMBLY FUSELAGE STA 78-128 LOWER DUCT PART NUMBER	1234567 NOMENCLATURE	CODE	UNITS PER ASSY
49 -	152-31104	DUCT ASSY - FUSELAGE STA 78-128 LOWER (SEE FIG. 48)		1
	152-31104-21	•DUCT ASSY - FUSELAGE STA 78-128 LOWER		1
- 1	152-31104-3	••SKIN - (LOWER DUCT)		1
- 2	152-31104-5	••DOUBLER - (LOWER DUCT SKIN PORT SIDE)		1
	152-31104-6	••DOUBLER - (LOWER DUCT SKIN STBD SIDE)		1
- 3	151-31652-1	•INTERCOSTAL ASSY - FUS STA 78-85 LOWER WHEEL WELL SUPPORT PORT SIDE	001-210	1
	151-31652-801	•INTERCOSTAL ASSY - FUS STA 78-85 LOWER WHEEL WELL SUPPORT PORT SIDE	211-	1
- 4	151-31652-2	•INTERCOSTAL ASSY - FUS STA 78-85 LOWER WHEEL WELL SUPPORT STARBOARD SIDE	001-210	1
	151-31652-802	•INTERCOSTAL ASSY - FUS STA 78-85 LOWER WHEEL WELL SUPPORT STARBOARD SIDE	211-	1
- 5	151-31126-3	•STIFFENER - FUSELAGE STA 85 DUCT FRAME		1
- 6	151-31153-1	•WEB - FUSELAGE STA 85-109 DUCT HORIZONTAL SHEAR PORT SIDE		1
	151-31153-2	•WEB - FUSELAGE STA 85-109 DUCT HORIZONTAL SHEAR STARBOARD SIDE		1
- 7	151-31614	•INTERCOSTAL - FUSELAGE STA 85-93 CENTRE BEAM ATTACHING		1
- 8	151-31129-3	•FRAME - FUSELAGE STA 93 DUCT		1
	151-31617-3	•CLIP - FUSELAGE FWD HORIZONTAL SHEAR WEB TO DUCT ATT PORT SIDE (STA 93)		1
	151-31617-4	•CLIP - FUSELAGE FWD HORIZONTAL SHEAR WEB TO DUCT ATT STBD SIDE (STA 93)		1
- 9	151-31133-3	•FRAME - FUSELAGE STA 100 DUCT		1
	151-31617-5	•CLIP - FUSELAGE FWD HORIZONTAL SHEAR WEB TO DUCT ATT PORT SIDE (STA 100)		1
	151-31617-6	•CLIP - FUSELAGE FWD HORIZONTAL SHEAR WEB TO DUCT ATT STBD SIDE (STA 100)		1
-10	151-31615	•INTERCOSTAL - FUSELAGE STA 93-100 CENTRE BEAM ATTACHING		1
-11	151-31616	•INTERCOSTAL - FUSELAGE STA 100-109 CENTRE BEAM ATTACHING		1
-12	151-31149-11	•ANGLE ASSY - FUS STA 85-131 HORIZONTAL SHEAR WEB SUPPORT PORT SIDE		1
	151-31149-4	•ANGLE ASSY - FUS STA 85-131 HORIZONTAL SHEAR WEB SUPPORT STARBOARD SIDE		1
-13	151-31135-17	•FRAME - FUSELAGE STA 109 DUCT		1
-14	151-31154-15	•WEB ASSY - FUSELAGE STA 109-131 DUCT HORIZONTAL SHEAR PORT SIDE		1
	151-31154-12	•WEB ASSY - FUSELAGE STA 109-131 DUCT HORIZONTAL SHEAR STARBOARD SIDE		1
-15	151-31183-9	•FRAME - FUSELAGE STA 114 DUCT		1
	151-31618-1	•CLIP - FUSELAGE REAR HORIZONTAL SHEAR WEB TO DUCT ATT PORT SIDE (STA 113)		1
	151-31618-2	•CLIP - FUSELAGE REAR HORIZONTAL SHEAR WEB TO DUCT ATT STBD SIDE (STA 113)		1
-16	152-31104-7	•ZED - FUSELAGE STA 109-114 LOWER DUCT		1
-17	151-31741-1	•ANGLE - FUSELAGE STA 109-114 DUCT TO AMMUNITION CELL PORT SIDE		1
	151-31741-2	•ANGLE - FUSELAGE STA 109-114 DUCT TO AMMUNITION CELL STARBOARD SIDE		1
-18	152-31186-7	•FRAME - FUSELAGE STA 119 DUCT		1
	151-31648-3	•CLIP - FUSELAGE INTERCOSTAL HOR SHEAR WEB TO DUCT ATT PORT SIDE (STA 118)		1
	151-31648-4	•CLIP - FUSELAGE INTERCOSTAL HOR SHEAR WEB TO DUCT ATT STBD SIDE (STA 118)		1
-19	152-31104-9	•ZED - FUSELAGE STA 114-119 LOWER DUCT		1

FIGURE AND INDEX NUMBER	GROUP FUSELAGE MAJOR ASSEMBLY FUSELAGE STA 78-128 LOWER DUCT PART NUMBER	1234567 NOMENCLATURE	CODE	UNITS PER ASSY
49 -20	151-31742-1	•ANGLE - FUSELAGE STA 114-119 DUCT TO AMMUNITION CELL PORT SIDE		1
	151-31742-2	•ANGLE - FUSELAGE STA 114-119 DUCT TO AMMUNITION CELL STARBOARD SIDE		1
-21	151-31606-21	•FRAME - FUSELAGE STA 126 CANTED DUCT		1
-22	152-31104-11	•ZED - FUSELAGE STA 119-126 LOWER DUCT		1
-23	151-31743-1	•ANGLE - FUSELAGE STA 119-125 DUCT TO AMMUNITION CELL PORT SIDE		1
	151-31743-2	•ANGLE - FUSELAGE STA 119-125 DUCT TO AMMUNITION CELL STARBOARD SIDE		1
-24	151-31103-81	DUCT ASSY - FUS STA 78-131 UPPER (SEE FIG. 48)		REF
		-000-		

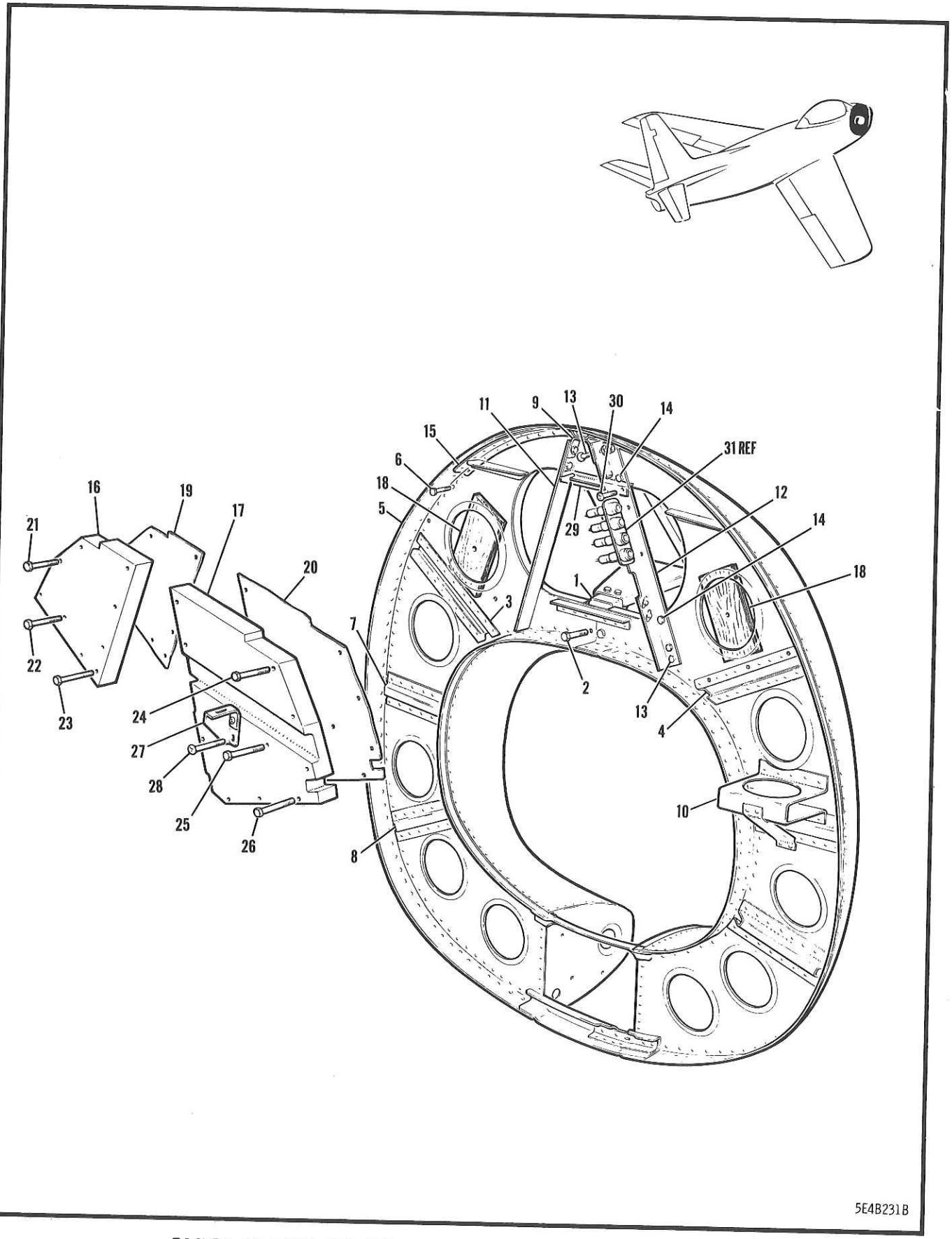

FIGURE 50 FUSELAGE STA 15 AIR DUCT NOSE FRAME & BALLASTS

FIGURE AND INDEX NUMBER	GROUP FUSELAGE MAJOR ASSEMBLY FUSELAGE STA 15 AIR DUCT NOSE FRAME & BALLASTS PART NUMBER	1234567 NOMENCLATURE	CODE	UNITS PER ASSY
50 -	151-31150-30	NOSE ASSY - COMPLETE FUSELAGE STA 0-15 (SEE FIG. 45)		REF
	151-31109-70	•FRAME ASSY - FUSELAGE AIR DUCT STA 15 (SEE FIG. 45)		1
- 1	170-74022	••SUPPORT ASSY - RADAR ANTENNA FUS STA 15		1
- 2	AN3-6A	••BOLT - (SUPPORT ATTACHING)		4
	AN960D10	••WASHER -		4
	AN365-1032	••NUT -		4
- 3	151-31109-63	••HAT - FUSELAGE AIR DUCT STA 15(PORT SIDE)		1
- 4	151-31109-41	••HAT - FUSELAGE AIR DUCT STA 15(STBD SIDE)		1
	AN3-4A	••BOLT - (HAT ATTACHING)		3
	AN960-10	••WASHER -		3
	AN365-1032	••NUT -		3
- 5	151-31109-65	••ANGLE - FUSELAGE AIR DUCT STA 15 (PORT)		1
	151-31109-55	••ANGLE - FUSELAGE AIR DUCT STA 15 (STBD)		1
- 6	AN4-3A	••BOLT - (ANGLE ATTACHING)		6
	AN960-416	••WASHER -		6
	AN365-428	••NUT -		6
- 7	151-31109-43	••HAT - FUSELAGE AIR DUCT STA 15(PORT SIDE)		1
	151-31109-59	••HAT - FUSELAGE AIR DUCT STA 15(STBD SIDE)		1
- 8	151-31109-45	••HAT - FUSELAGE AIR DUCT STA 15(PORT SIDE)		1
	151-31109-46	••HAT - FUSELAGE AIR DUCT STA 15(STBD SIDE)		1
- 9	151-31110	••BRACKET ASSY - DOOR LATCH SUP. FUS STA 15		1
-10	170-54079	••SUPPORT ASSY - BATTERY SUMP (STBD SIDE)		1
-11	151-31170-7	••SUPPORT ASSY - ANTENNA FUS STA 15 PORT		1
-12	151-31170-6	••SUPPORT ASSY - ANTENNA FUS STA 15 STBD	001-300	1
	151-31170-950	••SUPPORT ASSY - ANTENNA FUS STA 15 STBD	301-	1
-13	AN3-3A	••BOLT - (ANTENNA SUPPORT ATTACHING)		8
	AN960-10	••WASHER -		4
	AN365-1032	••NUT -		4
-14	AN3-3A	••BOLT - (ANTENNA SUPPORT ATTACHING)		4
-15	151-31494	•ANGLE - BULKHEAD UPPER STIFF. FUS STA 15		1
	13A-86001	BALLAST INSTL - FUSELAGE STA 15 (SEE FIG. 1)	001-370	NP
-16	13A-86003	•BALLAST - FUSELAGE STA 15 (PORT SIDE)	001-370	1
-17	13A-86004	•BALLAST - FUSELAGE STA 15 (STARBOARD SIDE)	001-370	1
-18	13A-86001-7	•BLOCK - BIRCH PLY 1/2 X 3 X 5-IN.	001-370	2
-19	13A-86001-3	•LEATHER - 1/8 X 10 X 9-3/4-IN. (PORT SIDE)	001-370	AR
-20	13A-86001-5	•LEATHER - 1/8 X 10 X 12-IN. (STBD SIDE)	001-370	AR
-21	AN4-22A	•BOLT - (BALLAST ATTACHING)	001-370	4
	AN960-416	•WASHER -	001-370	4
	AN970-4	•WASHER -	001-370	4
	AN365-428	•NUT -	001-370	4
-22	AN4-25A	•BOLT - (BALLAST ATTACHING)	001-370	1
	AN970-4	•WASHER -	001-370	2
	AN365-428	•NUT -	001-370	1
-23	AN3-22A	•BOLT - (BALLAST ATTACHING)	001-370	4
	AN960-10	•WASHER -	001-370	2
	AN970-3	•WASHER -	001-370	4
	AN365-1032	•NUT -	001-370	2
-24	AN4-21A	•BOLT - (BALLAST ATTACHING)	001-370	4
	AN960-416	•WASHER -	001-370	4
	AN970-4	•WASHER -	001-370	4
	AN365-428	•NUT -	001-370	4
-25	AN4-24A	•BOLT - (BALLAST ATTACHING)	001-370	1
	AN970-4	•WASHER -	001-370	1
	AN365-428	•NUT -	001-370	1
-26	AN3-21A	•BOLT - (BALLAST ATTACHING)	001-370	5
	AN970-3	•WASHER -	001-370	5
	AN960-10	•WASHER -	001-370	4

FIGURE AND INDEX NUMBER	GROUP FUSELAGE MAJOR ASSEMBLY FUSELAGE STA 15 AIR DUCT NOSE FRAME & BALLASTS PART NUMBER	1234567 NOMENCLATURE	CODE	UNITS PER ASSY
50 -	AN365-1032	•NUT -	001-370	4
-27	13A-86002	•BRACKET - AN/APG30 RADAR RIGID WAVEGUIDE SUPPORT FUSELAGE STA 15	001-370	1
-28	AN515-8R32	•SCREW - (BRACKET ATTACHING)	001-370	2
-29	13A-86001-9	•ANGLE - BALLAST FUSELAGE STA 15	001-370	1
-30	AN515-8R7	•SCREW - (ANGLE ATTACHING)	001-370	4
	AN365-832	•NUT -	001-370	4
-31	172-54108	PANEL ASSY - ELECTRICAL NOSE SPARE FUSE (SEE SECTION 10)		REF
		-000-		

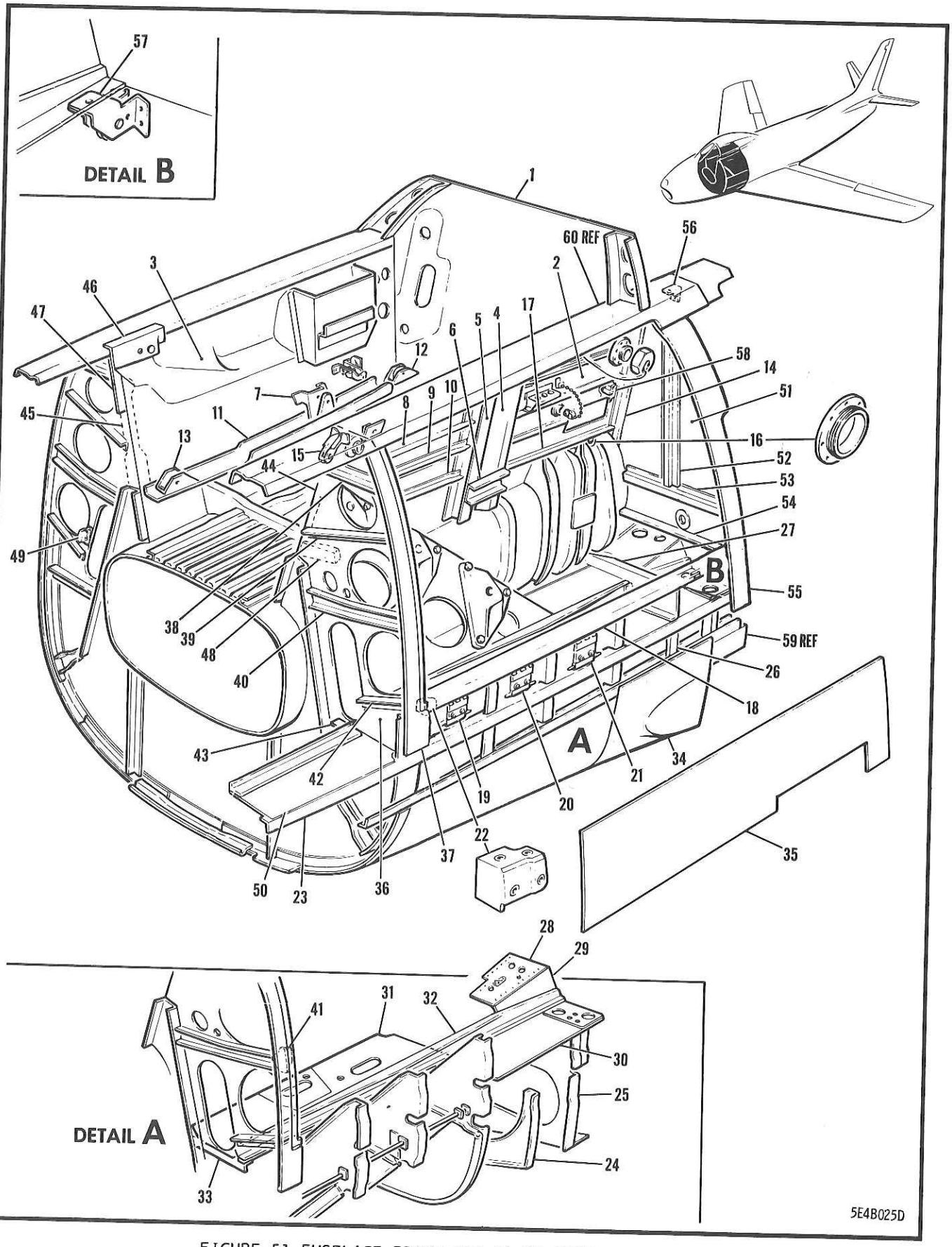

FIGURE 51 FUSELAGE FRAME STA 84 TO CANTED STA 87

FIGURE AND INDEX NUMBER	GROUP FUSELAGE MAJOR ASSEMBLY FUSELAGE FRAME STA 84 TO CANTED STA 87 PART NUMBER	1234567 NOMENCLATURE	CODE	UNITS PER ASSY
51 -	170-31132-801	FUSELAGE ASSY - STA 84 TO CANTED STA 127 (SEE FIG. 39)	001-100	1
	170-31132-804	FUSELAGE ASSY - STA 84 TO CANTED STA 127	101-200	1
	170-31132-807	FUSELAGE ASSY - STA 84 TO CANTED STA 127	201-210	1
	170-31132-806	FUSELAGE ASSY - STA 84 TO CANTED STA 127	211-370	1
	170-31132-808	FUSELAGE ASSY - STA 84 TO CANTED STA 127	371-	1
- 1	152-31138-300	•BULKHEAD ASSY - FUSELAGE CANTED STA 118 (SEE FIG. 55)		REF
	191-31027-1	•DOOR ASSY - AMMUNITION BOX ACC FAIRING FUS STA 84-109 PORT SIDE (SEE FIG. 54)		REF
	191-31027-2	•DOOR ASSY - AMMUNITION BOX ACC FAIRING FUS STA 84-109 STBD SIDE (SEE FIG. 54)		REF
- 2	170-31148-49	•WEB ASSY - FUSELAGE STA 80-126 COCKPIT PRESSURE (PORT) (SEE FIG. 53)		REF
	170-31148-50	•WEB ASSY - FUSELAGE STA 80-126 COCKPIT PRESSURE (STBD) (SEE FIG. 53)		REF
- 3	151-31749-10	•WEB ASSY - FUS STA 84-103 RADIO CTL SEAL COCKPIT PRESS. (STBD) (SEE FIG. 53)		REF
- 4	151-31619-11	•CHANNEL ASSY - FUSELAGE STA 106 REAR GUN TRUNNION SUPPORT PORT SIDE	001-030	1
	151-31619-7	•CHANNEL ASSY - FUSELAGE STA 106 REAR GUN TRUNNION SUPPORT PORT SIDE	031-	1
	151-31619-4	•CHANNEL - FUSELAGE STA 106 REAR GUN TRUNNION SUPPORT (STARBOARD SIDE)		1
	AN3-3A	•BOLT - (CHANNEL ATTACHING)		8
	2W1V13-14-62	•WASHER - PLAIN (NAA)		8
	AN365-1032	•NUT -		8
- 5	151-31168-11	•CHANNEL ASSY - FUSELAGE STA 104 REAR GUN TRUNNION SUPPORT (PORT SIDE)	001-030	1
	151-58377	••FAIRLEAD - HYDRAULIC EMY SPEEDBRAKE DUMP VALVE (PORT SIDE)	001-030	1
	151-31168-15	•CHANNEL - FUSELAGE STA 104 REAR GUN TRUN SUPPORT (PORT SIDE)	031-	1
	152-31152-10	•CHANNEL ASSY - FUSELAGE STA 104 REAR GUN TRUNNION SUP. (STARBOARD SIDE)		1
	152-53082	•STRAP ASSY - PILOT MAP CASE (STBD SIDE)		1
- 6	151-31620	•CHANNEL ASSY - FUS STA 105 CASE & LINK CHUTE SUPPORTING		2
	151-52404	•BRACKET ASSY - PILOT RUDDER CONTROL FUS STA 105 PORT SIDE		1
- 7	170-52404	•BRACKET ASSY - PILOT RUDDER CONTROL FUS STA 105 STARBOARD SIDE		1
- 8	170-31157	•ANGLE - FUSELAGE STA 84-104 PRESSURE WEB STIFFENER PORT SIDE		1
- 9	170-31155-1	•ANGLE ASSY - FUS STA 84-104 PRESSURE WEB SUPPORTING PORT SIDE		1
	170-31155-2	•ANGLE ASSY - FUS STA 84-104 PRESSURE WEB SUPPORTING STARBOARD SIDE		1
-10	170-31156-1	•ANGLE - FUSELAGE STA 84-106 PRESSURE WEB STIFFENER PORT SIDE		1
	170-31156-2	•ANGLE - FUSELAGE STA 84-106 PRESSURE WEB STIFFENER STARBOARD SIDE		1
	151-31167-31	•CHANNEL ASSY - FUSELAGE STA 84-117 CANTED PRESSURE WEB SUPPORTING PORT SIDE		1
-11	151-31167-30	•CHANNEL ASSY - FUSELAGE STA 84-117 CANTED PRESSURE WEB SUPPORTING STBD SIDE		1
-12	170-33608	•BRACKET ASSY - LANDING GEAR EMY REL FUS STA 114 PULLEY ,STARBOARD SIDE)		1
	170-33608-3	••BRACKET - LDG/GR EMY REL FUS STA 114 PUL		1
	4S4D4-22	••SPACER - RIVET (NAA)		1

FIGURE AND INDEX NUMBER	GROUP FUSELAGE MAJOR ASSEMBLY FUSELAGE FRAME STA 84 TO CANTED STA 87 PART NUMBER	1234567 NOMENCLATURE	CODE	UNITS PER ASSY
51 -	AN3-3A	•BOLT - (PULLEY BRACKET ATTACHING)		2
	AN365-1032	•NUT -		2
-13	170-33609	•BRACKET ASSY - LANDING GEAR EMY REL FUS STA 86 PULLEY (STARBOARD SIDE)		1
-14	151-31624	•ANGLE - FUSELAGE STA 117 CANTED PRESSURE WEB LH ATTACHING		1
	151-31632	•ANGLE - FUSELAGE STA 117 CANTED PRESSURE WEB RH ATTACHING		1
	140-52442	•BASE - RUDDER CONTROL PRESSURE STBD SIDE		1
-15	170-68726	•BRACKET ASSY - EMERGENCY JETT PULLEY FUS STA 84 (PORT SIDE)	001-210	1
	AN210-1B	••PULLEY -	001-210	1
	AN3-7A	••BOLT - MPI (PULLEY ATTACHING)	001-210	1
	NAS42DD4-28	••SPACER -	001-210	1
	AN960D10	••WASHER -	001-210	2
	AN365-1032	••NUT -	001-210	1
-16	151-52312	•COLLAR - AILERON CONTROL ACC (PORT SIDE)		1
-17	170-31132-9	•ANGLE - FUS STA 106-113 CANTED WEB (PORT)		1
	170-31132-11	•ANGLE - FUS STA 106-113 CANTED WEB (STBD)		1
	AN3-4A	•BOLT - (ANGLE & PRESS. WEB TO BHD ATT)		4
	2W1V13-14-62	•WASHER - PLAIN (NAA)		4
	AN365-1032	•NUT -		4
	AN3-5A	•BOLT - (ANGLE TO CHANNEL ATT PORT SIDE)		2
	AN960-10	•WASHER - (PORT SIDE)		2
	AN960-10L	•WASHER - (PORT SIDE)		2
	AN365-1032	•NUT - (PORT SIDE)		2
	151-31449-21	•STRINGER ASSY - FUSELAGE STA 84-131 GUN-BAY DOOR SUP. PORT SIDE	001-370	1
	151-31449-801	•STRINGER ASSY - FUSELAGE STA 84-131 GUN-BAY DOOR SUP. PORT SIDE	371-	1
	151-31449-22	•STRINGER ASSY - FUSELAGE STA 84-131 GUN-BAY DOOR SUP. STARBOARD SIDE	001-370	1
	151-31449-802	•STRINGER ASSY - FUSELAGE STA 84-131 GUN-BAY DOOR SUP. STARBOARD SIDE	371-	1
-18	151-31449-15	••STRINGER - FUSELAGE STA 84-131 GUN-BAY DOOR SUPPORTING PORT SIDE		1
	151-31449-16	••STRINGER - FUSELAGE STA 84-131 GUN-BAY DOOR SUPPORTING STARBOARD SIDE		1
-19	140-61088	••BRACKET ASSY - BOOSTER MOTOR FORWARD ATT	001-370	1
	140-61088-801	••BRACKET ASSY - BOOSTER MOTOR FORWARD ATT	371-	1
	140-61022	•••TEE - BOOSTER MOTOR FWD UPPER ATTACHING		1
	140-61025-7	•••HINGE ASSY - BOOSTER MOTOR FWD UPPER ATT	001-370	1
	140-61025-805	•••HINGE ASSY - BOOSTER MOTOR FWD UPPER ATT	371-	1
-20	140-61089	••BRACKET ASSY - BOOSTER MOTOR CENTRE ATT	001-370	1
	140-61089-801	••BRACKET ASSY - BOOSTER MOTOR CENTRE ATT	371-	1
	140-61023	•••TEE - BOOSTER MOTOR CENTRE UP. ATTACHING		1
	140-61025-5	•••HINGE ASSY - BOOSTER MOTOR UP. ATTACHING	001-370	1
	140-61025-803	•••HINGE ASSY - BOOSTER MOTOR UP. ATTACHING	371-	1
-21	140-61090	••BRACKET ASSY - BOOSTER MOTOR REAR ATT	001-370	1
	140-61090-801	••BRACKET ASSY - BOOSTER MOTOR REAR ATT	371-	1
	140-61024	•••TEE - BOOSTER MOTOR REAR UPPER ATTACHING		1
	140-61025-3	•••HINGE ASSY - BOOSTER MOTOR UP. ATTACHING	001-370	1
	140-61025-801	•••HINGE ASSY - BOOSTER MOTOR UP. ATTACHING	371-	1
	140-61021	••RELEASE - BOOSTER MOTOR ATT BRACKET QUICK		3
	AN960-10	••WASHER -		6
	2W1-12-20-65	••WASHER - PLAIN (NAA)		6
	AN365-1032	••NUT -		6
	151-31746	••PAD - FUS STA 114 GUN-BAY ACC DOOR LATCH		1
-22	151-31747-1	•PAD - FUS STA 84 GUN-BAY ACC DOOR LATCH PORT SIDE		1

FIGURE AND INDEX NUMBER	GROUP FUSELAGE MAJOR ASSEMBLY FUSELAGE FRAME STA 84 TO CANTED STA 87 PART NUMBER	1234567 NOMENCLATURE	CODE	UNITS PER ASSY
51 -	151-31747-2	•PAD - FUS STA 84 GUN-BAY ACC DOOR LATCH STARBOARD SIDE		1
-23	170-31132-7	•ANGLE - FUS STA 71-127 CANTED WEB (PORT)		1
	170-31132-8	•ANGLE - FUS STA 71-127 CANTED WEB (STBD)		1
-24	151-31724-1	•FRAME ASSY - FUSELAGE STA 118 LOWER PORT		1
	151-31724-2	•FRAME ASSY - FUSELAGE STA 118 LOWER STBD		1
-25	151-31754-1	•FORMER - FUS STA 118-125 WING FAIRING PORT		1
	151-31754-2	•FORMER - FUS STA 118-125 WING FAIRING STBD		1
-26	170-31132-13	•ANGLE - FUSELAGE STA 118 PORT SIDE		1
	170-31132-14	•ANGLE - FUSELAGE STA 118 STARBOARD SIDE		1
-27	151-31718-1	•CHANNEL ASSY - FUS STA 118 TO HORIZONTAL SHEAR WEB PORT SIDE	001-210	1
	151-31718-31	•CHANNEL ASSY - FUS STA 118 TO HORIZONTAL SHEAR WEB PORT SIDE	211-	1
	151-31718-12	•CHANNEL ASSY - FUS STA 118 TO HORIZONTAL SHEAR WEB STARBOARD SIDE		1
	151-31719-1	•CLIP - FUSELAGE STA 118 FRAME PORT SIDE		1
	151-31719-2	•CLIP - FUSELAGE STA 118 FRAME STBD SIDE		1
	151-31734-1	•CLIP - FUSELAGE STA 121 SHEAR WEB TO DUCT FRAME ATTACHING PORT SIDE		1
	151-31734-2	•CLIP - FUSELAGE STA 121 SHEAR WEB TO DUCT FRAME ATTACHING STARBOARD SIDE		1
	NAS220-10	•SCREW - (CHANNEL TO DUCT ATTACHING)		4
	NAS220-11	•SCREW - (CHANNEL TO DUCT ATTACHING)		4
	AN960C8	•WASHER -		8
	AN365-832	•NUT -		8
	AN3-5A	•BOLT - (CHANNEL TO DUCT ATTACHING)		2
	AN960D10	•WASHER -		2
	AN365-1032	•NUT -		2
-28	151-31629-33	•WEB ASSY - FUSELAGE STA 118-131 HORIZONTAL SHEAR CANTED PORT SIDE	001-210	1
	151-31629-951	•WEB ASSY - FUSELAGE STA 118-131 HORIZONTAL SHEAR CANTED PORT SIDE	211-	1
	151-31629-26	•WEB ASSY - FUSELAGE STA 118-131 HORIZONTAL SHEAR CANTED STARBOARD SIDE		1
-29	151-31631-3	•INTERCOSTAL - FUSELAGE STA 118-131 CANTED SHEAR WEB PORT SIDE		1
	151-31631-4	•INTERCOSTAL - FUSELAGE STA 118-131 CANTED SHEAR WEB STARBOARD SIDE		1
-30	151-31628-31	•WEB ASSY - FUS STA 109-131 PORT HOR SHEAR		1
	151-31628-32	•WEB ASSY - FUS STA 109-131 STBD HOR SHEAR		1
-31	172-31627-1	•WEB ASSY - FUS STA 84-109 PORT HOR SHEAR		1
	172-31627-2	•WEB ASSY - FUS STA 84-109 STBD HOR SHEAR		1
-32	151-31164-3	•CHANNEL - FUSELAGE STA 84-129 GUN TRUNNION WEB TO HORIZONTAL MTG PORT SIDE		1
	151-31164-4	•CHANNEL - FUSELAGE STA 84-129 GUN TRUNNION WEB TO HORIZONTAL MTG STARBOARD SIDE		1
-33	151-31757-1	•CHANNEL - FUS STA 84 PORT SHEAR WEB FORWARD INBOARD ATTACHING		1
	151-31757-2	•CHANNEL - FUS STA 84 STBD SHEAR WEB FORWARD INBOARD A TTACHING		1
-34	170-31132-3	•SKIN - FUSELAGE STA 109-125 LOWER PORT		1
	170-31132-4	•SKIN - FUSELAGE STA 109-125 LOWER STBD		1
-35	170-31132-5	•SKIN - FUSELAGE STA 84-126 CANTED PORT		1
	170-31132-6	•SKIN - FUSELAGE STA 84-126 CANTED STBD		1
	151-31127-1	•FRAME ASSY - FUSELAGE STA 84 PORT SIDE	001-100	1
	151-31127-801	•FRAME ASSY - FUSELAGE STA 84 PORT SIDE	101-	1
	151-31127-62	•FRAME ASSY - FUSELAGE STA 84 STBD SIDE	001-100	1
	151-31127-802	•FRAME ASSY - FUSELAGE STA 84 STBD SIDE	101-	1
-36	151-31127-29	••FRAME ASSY - FUSELAGE STA 84 PORT SIDE		1

FIGURE AND INDEX NUMBER	GROUP FUSELAGE MAJOR ASSEMBLY FUSELAGE FRAME STA 84 TO CANTED STA 87 PART NUMBER	1234567 NOMENCLATURE	CODE	UNITS PER ASSY
51 -	151-31127-30	••FRAME ASSY - FUSELAGE STA 84 STBD SIDE		1
-37	151-31127-11	••ANGLE - FUSELAGE STA 84 PORT SIDE		1
	151-31127-12	••ANGLE - FUSELAGE STA 84 STARBOARD SIDE		1
-38	151-31127-13	••ANGLE - FUSELAGE STA 84 PORT SIDE		1
	151-31127-34	••ANGLE - FUSELAGE STA 84 STARBOARD SIDE		1
-39	151-31127-15	••ANGLE - FUSELAGE STA 84 FRAME PORT SIDE		1
	151-31127-16	••ANGLE - FUSELAGE STA 84 FRAME PORT SIDE		1
-40	151-31127-17	••CHANNEL - FUSELAGE STA 84 FRAME PORT SIDE		1
	151-31127-18	••CHANNEL - FUSELAGE STA 84 FRAME STBD SIDE		1
-41	151-31127-951	••TEE - FUSELAGE STA 84 LH FRAME		1
	151-31127-952	••TEE - FUSELAGE STA 84 RH FRAME		1
-42	151-31127-19	••ANGLE - FUSELAGE STA 84 PORT SIDE		1
	151-31127-20	••ANGLE - FUSELAGE STA 84 STARBOARD SIDE		1
	295134-20A	••GROMMET - (MKM) (PLASTIC)		2
	S6-425	••SPRING - FASTENER (DFC)		1
	AN960-4L	••WASHER -		2
-43	151-31458-1	•ANGLE - FUS STA 84 FWD SHEAR WEB ATT PORT		1
	151-31458-2	•ANGLE - FUS STA 84 FWD SHEAR WEB ATT STBD		1
-44	151-31473-1	•ANGLE - FUS STA 84 PORT PRESSURE WEB ATT		1
-45	151-31473-4	•ANGLE - FUS STA 84 STBD PRESSURE WEB ATT		1
	151-52101-1	•SHIM - AILERON CONTROL STICK PORT SUPPORT		1
	151-52101-2	•SHIM - AILERON CONTROL STICK STBD SUPPORT		1
	170-52289	•BRACKET ASSY - HOR/STAB CONTROL FORWARD RIGGING (STARBOARD SIDE)	001-310	1
	170-52289-800	•BRACKET ASSY - HOR/STAB CONTROL FORWARD RIGGING (STARBOARD SIDE)	311-	1
-46	151-31726	•ANGLE - FUSELAGE STA 84 UPPER LONGN FLANGE SPLICE (STARBOARD SIDE)		1
-47	151-31727	•ANGLE - FRAME TO PRESSURE WEB UPPER ATTACHING FUS STA 84 (STBD SIDE)		1
-48	140-31188-1	•FITTING - TRUNNION SUPPORT GUN STA 84 PORT		1
	140-31188-2	•FITTING - TRUNNION SUPPORT GUN STA 84 STBD		1
-49	172-52096	•BRACKET ASSY - SURFACE CTL MAN. EMY CH/OV CDT GUARD SUPPORT (STARBOARD SIDE)	001-210	1
-50	176-61035-1	•WEB ASSY - CASE & LINK CONTAINER FUSELAGE STA 71-84 PORT SIDE		1
	176-61035-2	•WEB ASSY - CASE & LINK CONTAINER FUSELAGE STA 71-84 STARBOARD SIDE		1
	AN3-4A	•BOLT - (WEB ATTACHING)		12
	AN3-5A	•BOLT - (WEB ATTACHING)		16
	AN960D10	•WASHER -		18
	151-31221-801	•FRAME ASSY - FUS STA 126 CANTED (PORT)	001-210	1
	151-31221-803	•FRAME ASSY - FUS STA 126 CANTED (PORT)	211-	1
	151-31222-60	•FRAME ASSY - FUS STA 126 CANTED (STBD)	001-100	1
	151-31222-800	•FRAME ASSY - FUS STA 126 CANTED (STBD)	101-	1
-51	151-31221-7	••FRAME - FUSELAGE STA 126 CANTED (PORT)		1
	151-31222-7	••FRAME - FUSELAGE STA 126 CANTED (STBD)		1
-52	151-31221-9	••STIFFENER - FUS STA 126 CANTED FRA (PORT)	001-210	1
	151-31221-959	••STIFFENER - FUS STA 126 CANTED FRA (PORT)	211-	1
	151-31222-9	••STIFFENER - FUS STA 126 CANTED FRA (STBD)		1
-53	151-31221-17	••ANGLE - FUS STA 126 CANTED FRAME (PORT)	001-210	1
	151-31221-957	••ANGLE - FUS STA 126 CANTED FRAME (PORT)	211-	1
	151-31222-17	••ANGLE - FUS STA 126 CANTED FRAME (STBD)		1
-54	151-31221-19	••ANGLE - FUS STA 126 CANTED FRAME (PORT)	001-210	1
	151-31221-955	••ANGLE - FUS STA 126 CANTED FRAME (PORT)	211-	1
	151-31222-19	••ANGLE - FUS STA 126 CANTED FRAME (STBD)		1
-55	151-31221-45	••SEAL - (PORT GUN ACCESS DOOR)		1
	151-31222-45	••SEAL - (STBD GUN ACCESS DOOR)		1
	151-31221-33	••STRIP - (PORT SEAL RETAINING)		1
	151-31222	••STRIP - (STBD SEAL RETAINING)		1

FIGURE AND INDEX NUMBER	GROUP FUSELAGE MAJOR ASSEMBLY FUSELAGE FRAME STA 84 TO CANTED STA 87 PART NUMBER	1234567 NOMENCLATURE	CODE	UNITS PER ASSY
51 -56	151-31514	••FITTING - FUSELAGE STA 124 FORWARD HOIST		1
-57	170-68722	•BRACKET ASSY - EMERGENCY JETTISON PULLEY FUSELAGE STA 129	001-210	1
	AN210-1B	••PULLEY -	001-210	1
	AN3-7A	••BOLT - MPI (PULLEY ATTACHING)	001-210	1
	AN960D10	••WASHER -		2
	AN365-1032	••NUT -	001-210	1
	151-31169	•HOUSING ASSY - FUS STA 118-131 BELL-CRANK	001-100	1
	151-31169-20	•HOUSING ASSY - FUS STA 118-131 BELL-CRANK	101-	1
-58	151-58131	••BRACKET ASSY - FLAP VALVE CABLE PULLEY STA 126		1
	151-53589	•BRACKET - HEAT & VENT AMO HEATING EMY SHUT-OFF CTL FUS STA 126 (PORT SIDE)	001-210	1
	176-52246	•BRACKET - HORIZONTAL STAB. CTL BOB-WEIGHT BUNGEE (PORT SIDE)		1
	172-53438	•BRACKET ASSY - H/VENT SYSTEM AMO HEAT EMY SHUT-OFF CONTROL FUS STA 119 LH	001-210	1
	151-58399	•BRACKET ASSY - HYDRAULIC LINE SUP. FUS STA 121 (STARBOARD SIDE)		1
-59	151-31108-1	LONGERON ASSY - FUSELAGE STA 27-131 LOWER MAIN LH (SEE FIG. 39)		REF
-60	172-31107-141	LONGERON ASSY - FUSELAGE STA 15-131 UPPER MAIN LH (SEE FIG. 39)		REF
		(CONTINUED SEE FIG. 52)		

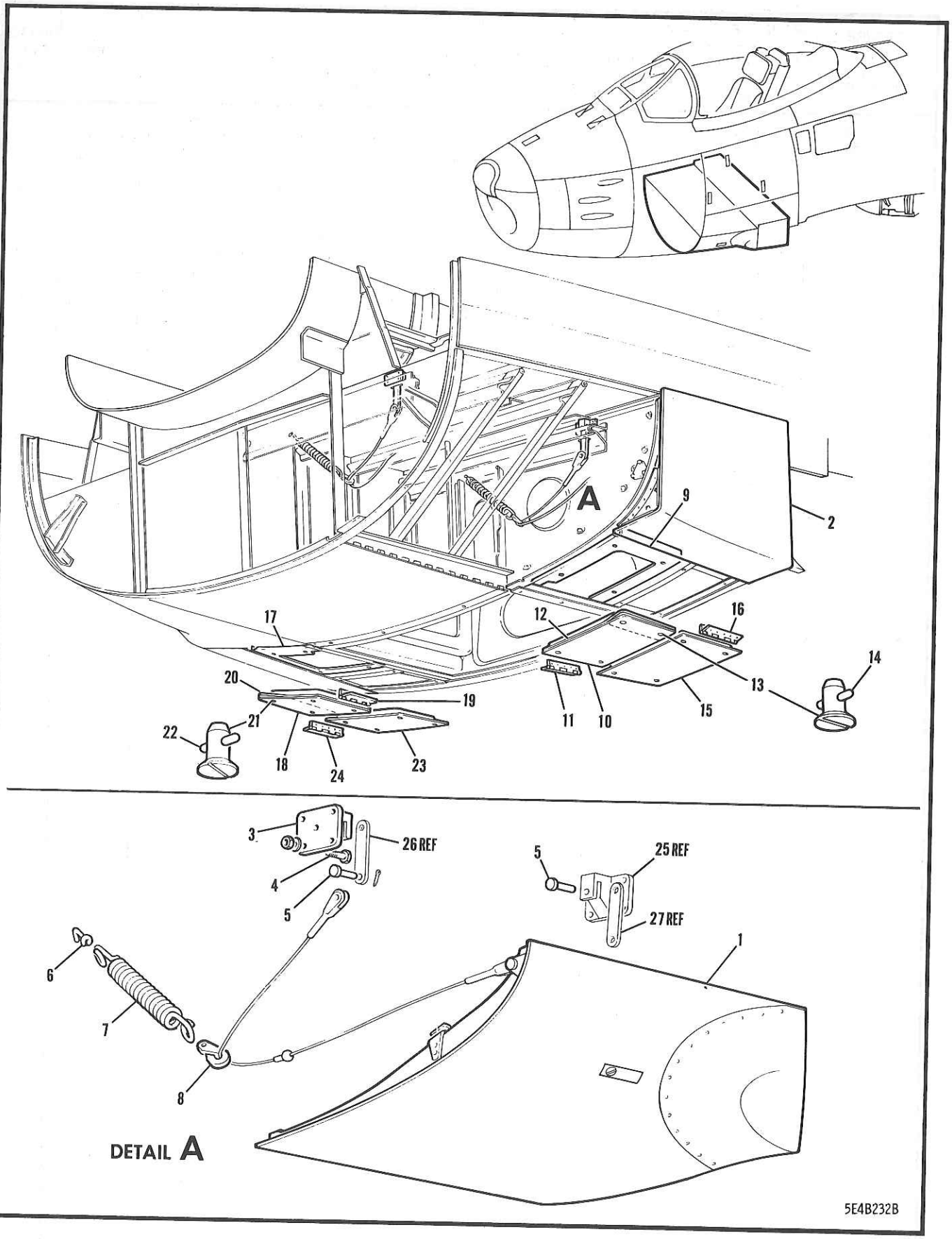

FIGURE 52 FUSELAGE STA 84-126 LOWER DOORS

FIGURE AND INDEX NUMBER	GROUP / MAJOR ASSEMBLY / PART NUMBER	FUSELAGE / FUSELAGE STA 84-126 LOWER DOORS / 1234567 NOMENCLATURE	CODE	UNITS PER ASSY
52 -	170-31132-801	FUSELAGE ASSY - STA 84 TO CANTED STA 126 (SEE FIG. 51)		REF
- 1	191-31027-1	•DOOR ASSY - AMMUNITION BOX ACCESS FAIRING FUS STA 84-109 PORT (SEE FIG. 54)		REF
	191-31027-2	•DOOR ASSY - AMMUNITION BOX ACCESS FAIRING FUS STA 84-109 STBD (SEE FIG. 54)		REF
	172-31032-1	•FILLET ASSY - FUS STA 109-125 FAIRING PORT		1
	172-31032-2	•FILLET ASSY - FUS STA 109-125 FAIRING STBD		1
- 2	172-31032-3	••FILLET - (FAIRING) (PORT SIDE)		1
	172-31032-4	••FILLET - (FAIRING) (STARBOARD SIDE)		1
	172-31032-5	••FRAME - (FILLET FAIRING) (PORT SIDE)		1
	172-31032-6	••FRAME - (FILLET FAIRING) (STARBOARD SIDE)		1
	NAS221-10	•SCREW - (AS PER EO 05-5E-6A/179)	001-736	18
	AN960PD10	•WASHER - (AS PER EO 05-5E-6A/179)	001-736	36
	AN365-1032	•NUT -	001-736	18
- 3	140-31033	•BRACKET - AMMUNITION ACC DOOR CABLE SUP.		2
- 4	AN3-5A	•BOLT -		8
	AN365-1032	•NUT -		8
- 5	AN393-17	•PIN -		4
	AN380-2-4	•COTTER-PIN -		4
	140-31029	•SPRING ASSY - AMMUNITION ACCESS DOOR CABLE		4
- 6	140-31030	••HOOK - AMMUNITION ACC DOOR CABLE SPRING		1
- 7	140-31049	••SPRING - AMMUNITION ACCESS DOOR CABLE		1
- 8	140-31050	••HOOK - AMMUNITION ACCESS DOOR CABLE		1
- 9	151-31026-1	•DOUBLER ASSY - FUSELAGE STA 109-118 AMMUNITION ACC PORT SIDE		1
	151-31027-801	•DOOR ASSY - AMMUNITION ACCESS FUSELAGE STA 109-118 PORT SIDE	001-020	1
	151-31027-803	•DOOR ASSY - AMMUNITION ACCESS FUSELAGE STA 109-118 PORT SIDE	021-	1
-10	151-31027-11	••DOOR - (AMMUNITION ACCESS) (PORT SIDE)		1
-11	151-31744	••HINGE - AMMUNITION ACCESS DOOR		1
-12	172-31034-1	••FILLET ASSY - FUSELAGE STA 109-118 CASE & LINK DOOR PORT SIDE		1
	98265-2-200	•••STUD - FLUSH HEAD AIRLOC FASTENER (MKM)		1
	98265-2-330	•••STUD - FLUSH HEAD AIRLOC FASTENER (MKM)		2
	99836	•••CROSS-PIN - AIRLOC FASTENER (MKM)		4
-13	98265-2-160	••STUD - FLUSH HEAD AIRLOC FASTENER (MKM)	001-020	2
	98265-2-160	••STUD - FLUSH HEAD AIRLOC FASTENER (MKM)	021-	1
	98265-2-230	••STUD - FLUSH HEAD AIRLOC FASTENER (MKM)	021-	1
	98265-2-250	••STUD - FLUSH HEAD AIRLOC FASTENER (MKM)	021-	4
-14	99836	••CROSS-PIN - AIRLOC FASTENER (MKM)		1
	151-31016	•DOOR ASSY - FUSELAGE STA 118-125 AMMUNITION ACCESS PORT SIDE	A10	1
	151-31016-803	•DOOR ASSY - FUSELAGE STA 118-125 AMMUNITION ACCESS PORT SIDE	021-069	1
-15	151-31016-5	••DOOR - (AMMUNITION ACCESS) (PORT SIDE)		1
-16	151-31744	••HINGE - AMMUNITION ACCESS DOOR		1
	98265-2-160	••STUD - FLUSH HEAD AIRLOC FASTENER (MKM)	A10	3
	98265-2-220	••STUD - FLUSH HEAD AIRLOC FASTENER (MKM)	A10	1
	99836	••CROSS-PIN - AIRLOC FASTENER (MKM)		4
-17	151-31026-2	•DOUBLER ASSY - FUSELAGE STA 109-118 AMMUNITION ACCESS STARBOARD SIDE		1
	151-31028-801	•DOOR ASSY - FUSELAGE STA 109-118 AMMUNITION ACCESS STARBOARD SIDE	001-020	1
	151-31028-803	•DOOR ASSY - FUSELAGE STA 109-118 AMMUNITION ACCESS STARBOARD SIDE	021-069	1
	151-31028-805	•DOOR ASSY - FUSELAGE STA 109-118 AMMUNITION ACCESS STARBOARD SIDE	070-	1

FIGURE AND INDEX NUMBER	GROUP FUSELAGE MAJOR ASSEMBLY FUSELAGE STA 84-126 LOWER DOORS PART NUMBER	1234567 NOMENCLATURE	CODE	UNITS PER ASSY
52 -18	151-31028-11	••DOOR - (AMMUNITION ACCESS) (STBD SIDE)		1
-19	151-31744	••HINGE - AMMUNITION ACCESS DOOR		1
-20	172-31034-2	••FILLET ASSY - FUSELAGE STA 109-118 CASE & LINK DOOR STARBOARD SIDE		1
	98265-2-200	•••STUD - FLUSH HEAD AIRLOC FASTENER (MKM)		1
-21	98265-4-390	•••STUD - FLUSH HEAD AIRLOC FASTENER (MKM)		1
-22	99836	•••CROSS-PIN - AIRLOC FASTENER (MKM)		2
	98265-2-160	••STUD - FLUSH HEAD AIRLOC FASTENER (MKM)	001-020	4
	98265-2-160	••STUD - FLUSH HEAD AIRLOCK FASTENER (MKM)	021-	2
	98265-3-280	••STUD - FLUSH HEAD AIRLOC FASTENER (MKM)	021-	1
	98265-3-290	••STUD - FLUSH HEAD AIRLOC FASTENER (MKM)	021-	1
	99836	••CROSS-PIN - AIRLOC FASTENER (MKM)		4
	151-31018	•DOOR ASSY - FUSELAGE STA 118-125 AMMUNITION ACCESS STARBOARD SIDE	A10	1
-23	151-31018-6	••DOOR - (AMMUNITION ACCESS) (STBD SIDE)		1
-24	151-31744	••HINGE - AMMUNITION ACCESS DOOR		1
	98265-2-160	••STUD - FLUSH HEAD AIRLOC FASTENER (MKM)		3
	98265-3-280	••STUD - FLUSH HEAD AIRLOC FASTENER (MKM)	A10	1
	99836	••CROSS-PIN - AIRLOC FASTENER (MKM)		4
-25	140-31033	BRACKET - AMMUNITION ACCESS DOOR CABLE SUP. (SEE FIG. 44)		REF
-26	140-31045-4	LOCK-PLATE - AMMUNITION DOOR (SEE FIG. 54)		REF
-27	140-31045-3	LOCK-PLATE - AMMUNITION DOOR (SEE FIG. 54)		REF
		(CONTINUED SEE SECTION 20)		

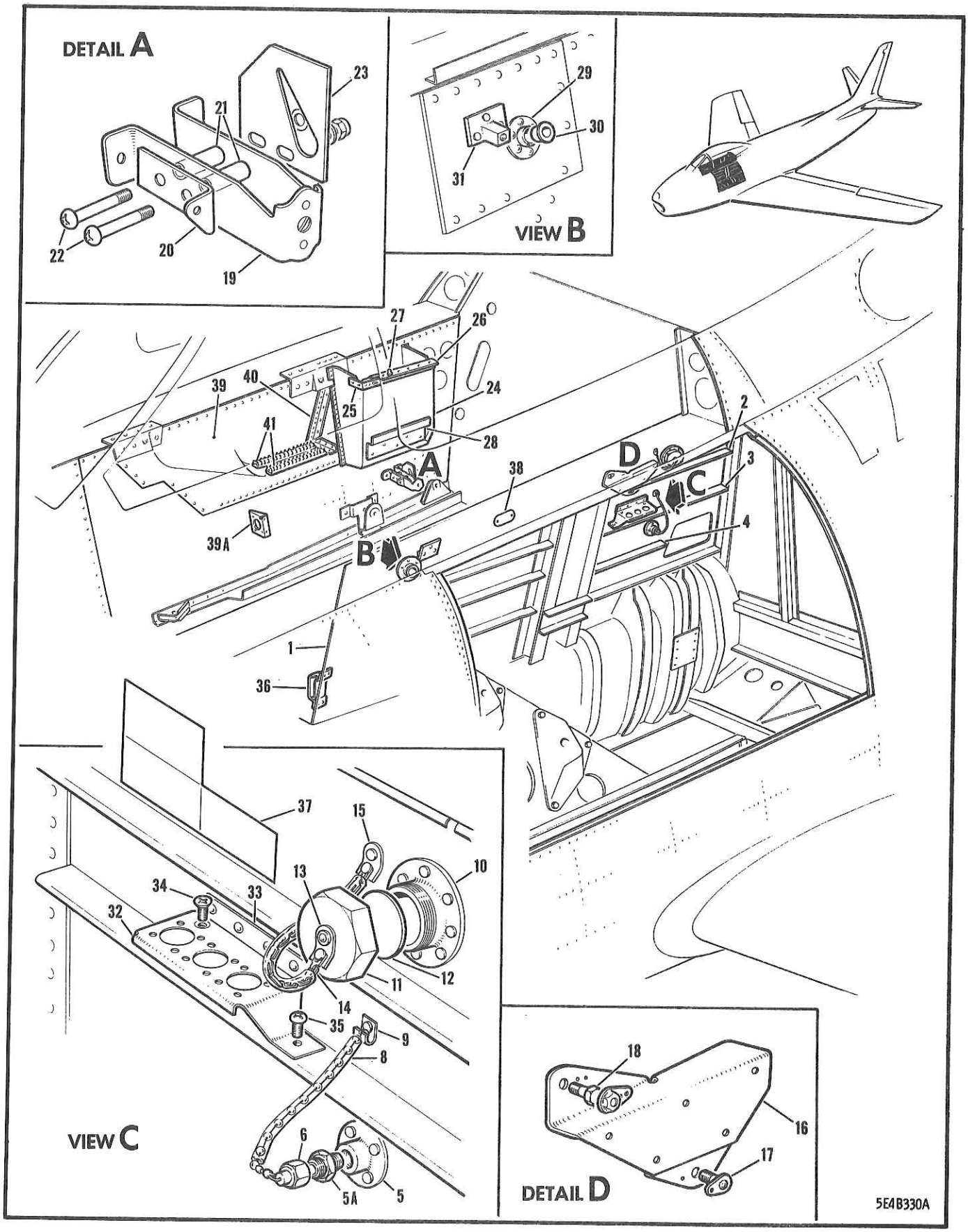

FIGURE 53 COCKPIT PRESSURE WEB

FIGURE AND INDEX NUMBER	GROUP / MAJOR ASSEMBLY / PART NUMBER	FUSELAGE / COCKPIT PRESSURE WEB / 1234567 NOMENCLATURE	CODE	UNITS PER ASSY
53 -	170-31148-49	WEB ASSY - FUSELAGE STA 80-126 COCKPIT PRESSURE (PORT) (SEE FIG. 51)	001-030	1
	170-31148-800	WEB ASSY - FUSELAGE STA 80-126 COCKPIT PRESSURE (PORT)	031-210	1
	170-31148-803	WEB ASSY - FUSELAGE STA 80-126 COCKPIT PRESSURE (PORT)	211-	1
	170-31148-50	WEB ASSY - FUSELAGE STA 80-126 COCKPIT PRESSURE (STBD) (SEE FIG. 51)		1
- 1	170-31148-5	.WEB - FUS STA 80-126 CKPT PRESSURE (PORT)	001-030	1
	170-31148-952	.WEB - FUS STA 80-126 CKPT PRESSURE (PORT)	031-	1
	170-31148-10	.WEB ASSY - FUSELAGE STA 80-126 COCKPIT PRESSURE (STARBOARD)		1
	170-31148-14	..WEB - FUS STA 80-126 CKPT PRESSURE (STBD)		1
- 2	170-31148-15	.ANGLE - (FUS STA 106-126 COCKPIT PRESSURE WEB PORT REINFORCING)		1
	170-31148-16	.ANGLE - (FUS STA 106-126 COCKPIT PRESSURE WEB STARBOARD REINFORCING)		1
- 3	170-31148-17	.ANGLE - (FUS STA 106-126 COCKPIT PRESSURE WEB PORT REINFORCING)		1
	170-31148-18	.ANGLE - (FUS STA 106-126 COCKPIT PRESSURE WEB STARBOARD REINFORCING)		1
- 4	170-31148-19	.ANGLE - (FUS STA 106-126 COCKPIT PRESSURE WEB PORT REINFORCING)		1
	170-31148-20	.ANGLE - (FUS STA 106-126 COCKPIT PRESSURE WEB STARBOARD REINFORCING)		1
- 5	AF865-1	.FLANGE - (PORT SIDE)		1
- 5A	AN816-4	.NIPPLE - (AS PER EO 05-5E-6A/265)		1
	130-53456-950	.PLUG ASSY - CABIN PRESSURE SYSTEM TEST FTG (PORT SIDE) (AS PER EO 05-5E-6A/265)		1
- 6	AN929A4	..CAP ASSY - (PORT SIDE)		1
- 7		..DELETED		
- 8	6	..CHAIN ASSY - (BCM) (WITH C SNAP & 6-R2 END RING)		1
	130-53456-5	..TUBING -		AR
- 9	2C28	..CLIP - BALL CHAIN ATT (NAA) (PORT SIDE)		1
-10	130-53447-3	.FITTING - CABIN AIR SYSTEM PRESSURE TEST LINE (PORT SIDE)		1
	130-53455-3	.CAP ASSY - CABIN AIR PRESSURE SYSTEM TEST FITTING (PORT SIDE)		1
-11	130-53446-3	..CAP - (CABIN PRESS. TEST FITTING) (PORT)		1
-12	130-53448-3	..SEAL - (TEST FITTING CAP) (PORT SIDE)		1
-13	130-53455-7	..CLIP - (CHAIN TO CAP ATTACHING) (PORT)		1
	AN960A4	..WASHER - (PORT SIDE)		1
	4S4D4-4	..SPACER - RIVET (NAA) (PORT SIDE)		1
-14	9C1-2-5	..SAFETY-CHAIN - (NAA) (PORT SIDE)		1
-15	130-53455-9	..CLIP - (CHAIN TO PRESSURE BULKHEAD ATT)		1
	151-51029	.SUPPORT ASSY - TYPE M4 VALVE (PORT SIDE)		1
-16	151-51029-3	..SUPPORT - (TYPE M4 VALVE) (PORT SIDE)		1
-17	151-51041	..BOLT - (TYPE M4 VALVE ATT) (PORT SIDE)		1
-18	AN4-6A	..BOLT - (TYPE M4 VALVE ATT) (PORT SIDE)		2
	170-31148-804	.SPACER ASSY - (COCKPIT PRESS. WEB) (STBD) (AS PER EO 05-5E-6B/11)		1
-19	170-31148-953	..SPACER - (COCKPIT PRESS. WEB) (STBD SIDE) (AS PER EO 05-5E-6B/11)		1
	S4-225	..SPRING - FASTENER (DFC)		1
-20	170-31148-954	..CLIP - SPACER (AS PER EO 05-5E-6B/11)		1
-21	NAS43-3-56	..SPACER -		2
-22	NAS221-23	..SCREW - (CLIP TO SPACER ATTACHING)		2
	AN960-10	..WASHER -		2
	AN365-1032	..NUT -		2
-23	170-31148-955	..GUARD - SPACER (AS PER EO 05-5E-6B/11)	001-517	1
	170-31148-957	..GUARD - SPACER	518-	1

FIGURE AND INDEX NUMBER	GROUP / MAJOR ASSEMBLY / PART NUMBER	FUSELAGE / COCKPIT PRESSURE WEB / 1234567 NOMENCLATURE	CODE	UNITS PER ASSY
53 -	152-53080-10	•CASE ASSY - PILOT MAP (STARBOARD SIDE)		1
-24	152-53080-3	••CASE - (PILOT MAP) (STARBOARD SIDE)		1
-25	152-53080-13	••STRIP - (MAP CASE REINFORCING) (STBD)		1
-26	152-53080-15	••ANGLE - (MAP CASE FASTENER MTG) (STBD)		1
-27	AN227-22L	••FASTENER - (STARBOARD SIDE)		1
	S4-225	••SPRING - FASTENER (DFC)		2
	AN526-832R8	••SCREW - (ANGLE TO MAP CASE ATT) (STBD)		2
	152-53080-19	••PLATE - (MAP CASE ATTACHING) (STBD SIDE)		2
-28	152-53080-17	••ANGLE - (PILOT MAP CASE) (STBD SIDE)		1
	152-53080-7	••BRACKET - (MAP CASE CORNER) (STBD SIDE)		1
	2C31	••CLIP - CONDUIT (NAA) (MAP CASE REAR)		2
	140-54160	•BRACKET ASSY - WING ELECTRICAL BLOCK SUPPORTING (STARBOARD SIDE)		2
	151-58386	•HOUSING ASSY - HYDRAULIC EMY SPEEDBRAKE DUMP VALVE CONTROL (PORT SIDE)	001-030	1
-29	151-58386-3	••HOUSING - (EMY BRAKE VALVE) (PORT SIDE)	001-030	1
-30	4B16CF7-14	••BEARING - SINTERED OIL IMPREGNATED (NAA)	001-030	2
-31	151-43099	•FITTING - ENGINE CONTROL QUADRANT SPACER SUPPORTING (PORT SIDE)		1
	170-54129	•BRACKET ASSY - GUN HEATER DISCONNECT ELECTRICAL RECEPTACLE SUPPORT		1
-32	170-54129-3	••BRACKET - (RECEPTACLE SUPPORT)		1
-33	170-54129-5	••ANGLE - (RECEPTACLE SUPPORT BRACKET)		1
-34	AN509-10R8	••SCREW - (ANGLE TO BRACKET ATTACHING)	001-300	2
	AN520-10R8	••SCREW - (ANGLE TO BRACKET ATTACHING)		2
-35	AN520-10R8	•SCREW - (BRACKET TO PRESSURE WEB ATT)		2
	151-53590	•BRACKET ASSY - HEAT & VENT AMO HEAT EMY SHUT-OFF CONTROL STA 105 PORT SIDE	001-210	1
	2W1-8-16-35	•WASHER - PLAIN (NAA) (PORT SIDE)	001-210	1
	151-54038	•BLOCK - ELEC PRESSURIZED (STARBOARD SIDE)		2
-36	151-54268	•GUARD ASSY - RUDDER CABLE ELEC (PORT SIDE)		1
	140-53360	•CLIP - HEAT & VENT SELECTOR VALVE FORWARD CONTROL SUPPORT (PORT SIDE)		1
-37	151-53519-11	•DECALCOMANIA - HEAT & VENT SYSTEM PRESSURE CHECK FITTING (PORT SIDE)		1
-38	172-53335	•NAME-PLATE - HEAT & VENT SYSTEM WINDSHIELD ANTI-ICING CONTROL (PORT SIDE)		1
	151-31749-10	WEB ASSY - FUSELAGE STA 84-103 CKPT RADIO CTL PRESS. SEAL (STBD) (SEE FIG. 51)	001-370	1
	151-31749	WEB ASSY - FUSELAGE STA 84-103 COCKPIT RADIO CTL PRESSURE SEAL (STBD SIDE)	371-	1
-39	151-31749-13	•WEB - FUSELAGE STA 84-103 COCKPIT RADIO CONTROL PRESSURE SEAL (STBD SIDE)	001-370	1
	151-31749-3	•WEB - FUSELAGE STA 84-103 COCKPIT RADIO CONTROL PRESSURE SEAL (STBD SIDE)	371-	1
-39A	13B-52039	•BRACKET - GUN BOMB ROCKET CABLE DISCONNECT MOUNTING (AS PER EO 05-5E-6A/275)		1
-40	151-31749-5	•ANGLE - (RADIO CONTROL WEB ANGLE) (STBD)		1
-41	NAS45-6-14	•TERMINAL BLOCK ASSY - (STARBOARD SIDE)	001-370	2
	NAS45-6-16	•TERMINAL BLOCK ASSY - (STARBOARD SIDE)	371-	2
	AN515-4R7	•SCREW - (TERMINAL BLOCK ATTACHING)	001-370	4
	AN515-4R7	•SCREW - (TERMINAL BLOCK ATTACHING)	371-	6
	2W1V8-8-32	•WASHER - PLAIN (NAA)	001-370	4
	2W1V8-8-32	•WASHER - PLAIN (NAA)	371-	6
	AN960-4	•WASHER -	371-	6
	NAS43-0-8	•SPACER -	371-	6
	AN365-440	•NUT -	001-370	4
	AN365-440	•NUT -	371-	6

-000-

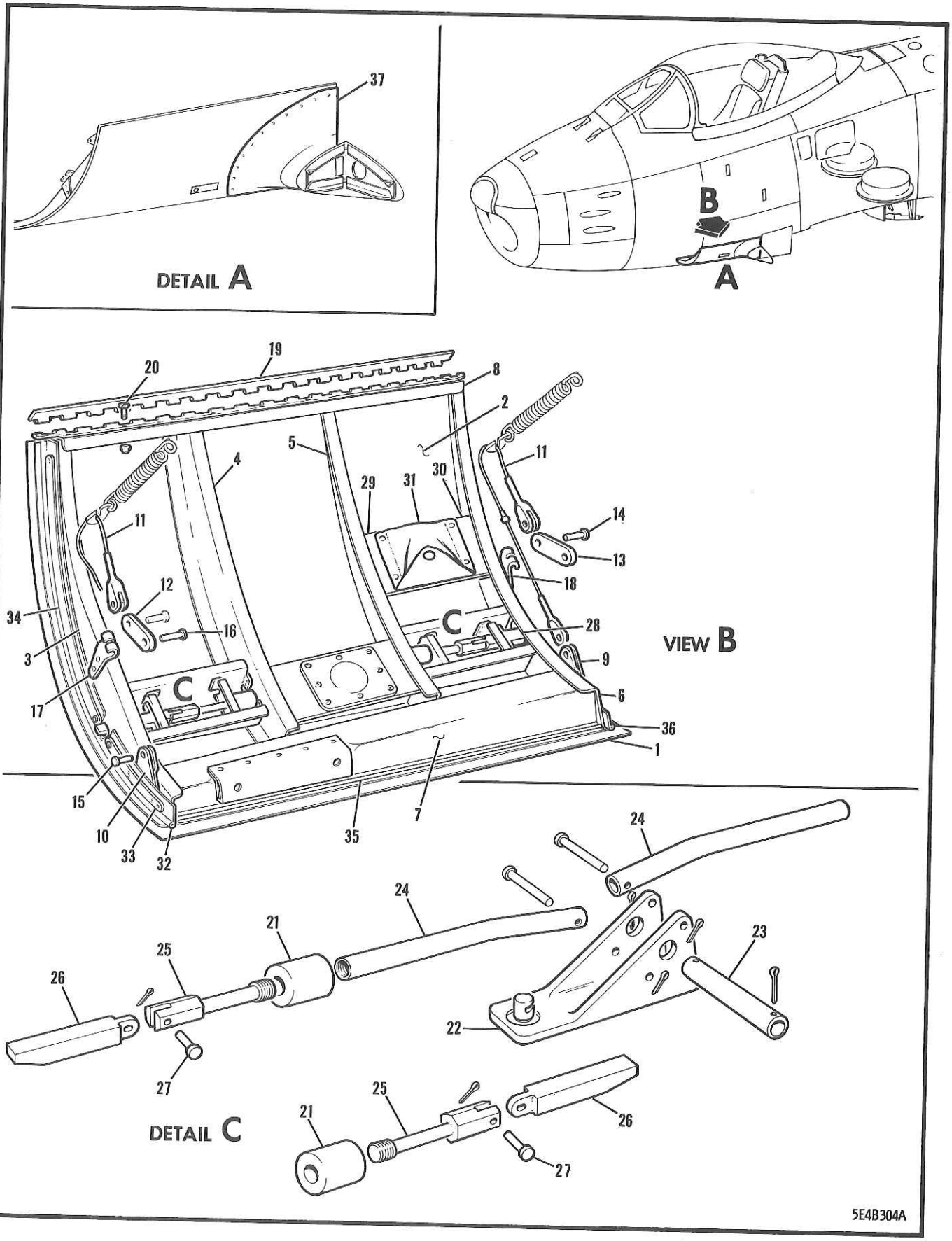

FIGURE 54 AMMUNITION BOX ACCESS FAIRING DOOR

FIGURE AND INDEX NUMBER	GROUP FUSELAGE MAJOR ASSEMBLY AMMUNITION BOX ACCESS FAIRING DOOR PART NUMBER	1234567 NOMENCLATURE	CODE	UNITS PER ASSY
54 -	191-31027-1	DOOR ASSY - AMO BOX ACCESS FAIRING FUS STA 84-109 PORT (SEE FIG. 51 & 52)	001-736	1
	191-31027-801	DOOR ASSY - AMMUNITION BOX ACCESS FAIRING FUS STA 84-109 PORT (SEE FIG. 32)	737-	1
	191-31027-2	DOOR ASSY - AMO BOX ACCESS FAIRING FUS STA 84-109 STBD (SEE FIG. 51 & 52)	001-736	1
	191-31027-802	DOOR ASSY - AMMUNITION BOX ACCESS FAIRING FUS STA 84-109 STBD (SEE FIG. 32)	737-	1
	151-31007-101	•DOOR ASSY - AMMUNITION BOX ACCESS PORT	001-100	1
		OR		
	151-31007-807	•DOOR ASSY - AMMUNITION BOX ACCESS PORT	001-100	
	151-31007-803	•DOOR ASSY - AMMUNITION BOX ACCESS PORT	101-210	1
	151-31007-805	•DOOR ASSY - AMMUNITION BOX ACCESS PORT	211-	1
	151-31007-102	•DOOR ASSY - AMMUNITION BOX ACCESS STBD	001-100	1
		OR		
	151-31007-808	•DOOR ASSY - AMMUNITION BOX ACCESS STBD	001-100	
	151-31007-804	•DOOR ASSY - AMMUNITION BOX ACCESS STBD	101-210	1
	151-31007-806	•DOOR ASSY - AMMUNITION BOX ACCESS STBD	211-	1
- 1	151-31007-301	••DOOR ASSY - AMMUNITION BOX ACCESS PORT	001-210	1
	151-31007-961	••DOOR ASSY - AMMUNITION BOX ACCESS PORT	211-	1
	151-31007-302	••DOOR ASSY - AMMUNITION BOX ACCESS STBD	001-210	1
	151-31007-962	••DOOR ASSY - AMMUNITION BOX ACCESS STBD	211-	1
- 2	151-31007-3	•••SKIN - FUSELAGE STA 84-131 DOOR PORT		1
	151-31007-4	•••SKIN - FUSELAGE STA 84-131 DOOR STBD		1
- 3	151-31007-11	•••ZED - FUSELAGE STA 84 DOOR PORT		1
	151-31007-12	•••ZED - FUSELAGE STA 84 DOOR STARBOARD		1
- 4	151-31007-9	•••ZED - FUSELAGE STA 92 DOOR PORT		1
	151-31007-10	•••ZED - FUSELAGE STA 92 DOOR STARBOARD		1
- 5	151-31007-7	•••ZED - FUSELAGE STA 100 DOOR PORT		1
	151-31007-8	•••ZED - FUSELAGE STA 100 DOOR STARBOARD		1
- 6	151-31007-5	•••ZED - FUSELAGE STA 109 DOOR PORT		1
	151-31007-6	•••ZED - FUSELAGE STA 109 DOOR STARBOARD		1
- 7	151-31007-13	•••CHANNEL - FUSELAGE STA 84-131 DOOR PORT	001-100	1
	151-31007-957	•••CHANNEL - FUSELAGE STA 84-109 DOOR PORT	101-	1
	151-31007-14	•••CHANNEL - FUSELAGE STA 84-131 DOOR STBD	001-100	1
	151-31007-958	•••CHANNEL - FUSELAGE STA 84-109 DOOR STBD	101-	1
	151-31007-963	•••GUARD - AMMUNITION ACCESS DOOR REINF PORT (AS PER EO 05-5E-6A/116)	001-100	1
	151-31007-959	•••GUARD - AMMUNITION ACCESS DOOR REINFORCING PORT	101-	1
	151-31007-964	•••GUARD - AMMUNITION ACCESS DOOR REINF STARBOARD (AS PER EO 05-5E-6A/116)	001-100	1
	151-31007-960	•••GUARD - AMMUNITION ACCESS DOOR REINFORCING STARBOARD	101-	1
- 8	151-31007-17	•••CHANNEL - FUSELAGE STA 84-109 DOOR PORT		1
	151-31007-18	•••CHANNEL - FUSELAGE STA 84-109 DOOR STBD		1
- 9	140-31041-1	•••BRACKET ASSY - AMMUNITION ACCESS DOOR LOCK CABLE (PORT SIDE FORWARD & STARBOARD SIDE REAR)		1
-10	140-31041-2	•••BRACKET ASSY - AMMUNITION ACCESS DOOR LOCK CABLE (PORT SIDE REAR & STARBOARD SIDE FORWARD)		1
	140-31042	••CABLE ASSY - AMMUNITION ACCESS DOOR LOCK		2
-11	140-31042-3	•••CABLE - AMMUNITION ACCESS DOOR LOCK		1
	AN664C4	•••TERMINAL -		1
	AN668-4	•••TERMINAL -		1
	AN667-4	•••TERMINAL -		1
	13-30012-952	••REINFORCEMENT - AMMUNITION BOX ACC DOOR STEP AREA HOOD STARBOARD SIDE		1
-12	140-31045-4	••LOCK-PLATE - AMMUNITION ACCESS DOOR		1

FIGURE AND INDEX NUMBER	GROUP / MAJOR ASSEMBLY / PART NUMBER	FUSELAGE / AMMUNITION BOX ACCESS FAIRING DOOR / 1234567 NOMENCLATURE	CODE	UNITS PER ASSY
54 -13	140-31045-3	••LOCK-PLATE - AMMUNITION ACCESS DOOR		1
-14	AN393-13	••PIN -		1
	AN380-2-1	••COTTER-PIN -		1
-15	AN393-11	••PIN -		1
	AN380-2-1	••COTTER-PIN -		2
-16	AN393-17	••PIN -		1
	AN380-2-4	••COTTER-PIN -		1
-17	140-31044-5	••HOOK - AMO ACCESS DOOR LOCK CABLE STA 84		1
-18	140-31043	••HOOK - AMMUNITION ACCESS DOOR LOCK CABLE		1
	NAS221-9	••SCREW -		4
	AN960-10	••WASHER -		4
	AN365-1032	••NUT -		4
-19	151-31709-801	••HINGE ASSY - FUSELAGE AMO ACC DOOR PORT (AS PER EO 05-5E-6A/179)		1
	151-31709-802	••HINGE ASSY - FUSELAGE AMO ACC DOOR STBD (AS PER EO 05-5E-6A/179)		1
-20	NAS221-10	••SCREW - (AS PER EO 05-5E-6A/179)		9
	AN960PD10	••WASHER - (AS PER EO 05-5E-6A/179)		18
	AN365-1032	••NUT -		9
-21	140-31048	••SEAL - AMMUNITION ACCESS DOOR HANDLE		2
	151-31007-61	••BRACKET - AMMUNITION BOX ACCESS DOOR		2
	NAS220-8	••SCREW -		8
	AN960-8L	••WASHER -		8
	AN365-832	••NUT -		8
-22	140-31040	••HANDLE ASSY - AMMUNITION ACCESS DOOR		1
	GA5-312	•••GROMMET - FASTENER (DFC)		1
	A5-40	•••FASTENER - OVAL HEAD (DFC)		1
	4S4D12-25	••SPACER - RIVET (NAA)		2
	AN960-616L	••WASHER -		2
	AN380-2-4	••COTTER-PIN -		2
-23	140-31046	••SHAFT - AMMUNITION ACCESS DOOR HANDLE		1
	AN515-6-6	••SCREW -		6
	AN365-632	••NUT -		6
-24	140-31039	••LOCK-TUBE - AMMUNITION ACCESS DOOR		2
-25	140-31038	••LOCK-SCREW - AMMUNITION ACCESS DOOR		2
	AN392-13	••PIN -		2
	AN380-2-1	••COTTER-PIN -		2
-26	151-31609	••LOCK-PIN - AMMUNITION ACCESS DOOR		2
-27	AN392-13	••PIN -		2
	AN380-2-1	••COTTER-PIN -		2
-28	151-31610	••SUPPORT - AMMUNITION ACCESS DOOR LOCK		2
	AN3-4A	••BOLT -		2
	AN3-5A	••BOLT -		2
	2W18-10	••WASHER - FLAT (NAA)		6
	AN365-1032	••NUT -		8
-29	151-31007-93	••ANGLE - (GUN CHARGER STOWAGE SUPPORT)	211-	1
	151-31007-351	••STOWAGE ASSY - (GUN CHARGER) (PORT SIDE)	211-	1
	151-31007-352	••STOWAGE ASSY - (GUN CHARGER) (STBD SIDE)	211-	1
-30	151-31007-91	•••ANGLE - (GUN CHARGER SUPPORT)	211-	1
-31	140-61092	•••BAG ASSY - FIXED .50 CAL GUN CHARGER STOWAGE (FOR LWR CODE SEE SECT. 10)	211-	1
-32	151-31007-71	••SEAL - (AMMUNITION ACCESS DOOR FORWARD)		1
-33	151-31007-67	••STRIP - (FORWARD SEAL RETAINING) (PORT)		1
	151-31007-68	••STRIP - (FORWARD SEAL RETAINING) (STBD)		1
-34	151-31007-69	••STRIP - (FORWARD SEAL RETAINING)		1
-35	151-31007-65	••SEAL - (AMMUNITION ACCESS DOOR)		1

FIGURE AND INDEX NUMBER	GROUP FUSELAGE MAJOR ASSEMBLY AMMUNITION BOX ACCESS FAIRING DOOR PART NUMBER	1234567 NOMENCLATURE	CODE	UNITS PER ASSY
54 -	151-31007-63	••STRIP - (SEAL RETAINING)		1
-36	151-31007-75	••SEAL - (AMMUNITION ACCESS DOOR REAR)		1
	151-31007-73	••STRIP - (REAR SEAL RETAINING)		1
-37	172-31033-11	•FILLET ASSY - FUSELAGE STA 100-109 DOOR FAIRING PORT	001-736	1
	172-31033-801	•FILLET ASSY - FUSELAGE STA 100-109 DOOR FAIRING PORT	737-	1
	172-31033-12	•FILLET ASSY - FUSELAGE STA 100-109 DOOR FAIRING STARBOARD	001-736	1
	172-31033-802	•FILLET ASSY - FUSELAGE STA 100-109 DOOR FAIRING STARBOARD	737-	1

-000-

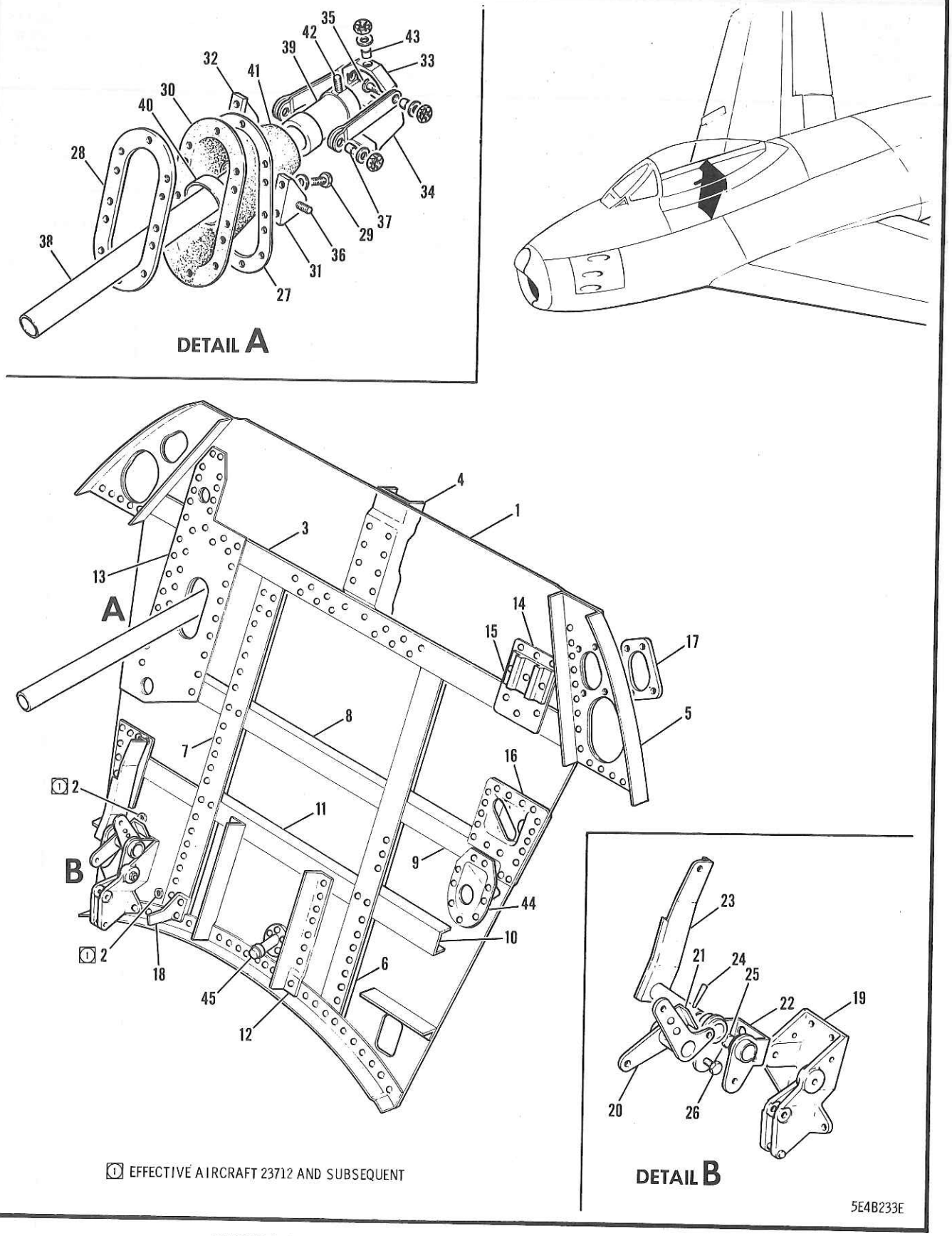

FIGURE 55 FUSELAGE STA 118 CANTED BULKHEAD

FIGURE AND INDEX NUMBER	GROUP FUSELAGE MAJOR ASSEMBLY FUSELAGE STA 118 CANTED BULKHEAD PART NUMBER	1234567 NOMENCLATURE	CODE	UNITS PER ASSY
55 -	152-31138-300	BULKHEAD ASSY - FUSELAGE STA 118 CANTED (SEE FIG. 51)	001-100	1
	152-31138-310	BULKHEAD ASSY - FUSELAGE STA 118 CANTED	101-210	1
	152-31138-800	BULKHEAD ASSY - FUSELAGE STA 118 CANTED	211-	1
- 1	152-31138-55	.WEB - FUSELAGE STA 118 CANTED BULKHEAD	001-100	1
	152-31138-57	.WEB - FUSELAGE STA 118 CANTED BULKHEAD	101-210	1
	152-31138-59	.WEB - FUSELAGE STA 118 CANTED BULKHEAD	211-	1
- 2	AN227-8	.STUD -	712-	2
- 3	151-31665-30	.ANGLE - FUSELAGE STA 118 CANTED UPPER LONGERON ATTACHING		1
- 4	152-31138-25	.CHANNEL - FUSELAGE STA 118 CANTED BULKHEAD		1
- 5	151-31621	.DOUBLER - FUSELAGE STA 118 CANTED UPPER LONGN TO DECK PORT SIDE		1
	151-31622	.DOUBLER - FUSELAGE STA 118 CANTED UPPER LONGN TO DECK STARBOARD SIDE		1
- 6	152-31138-27	.TEE - FUSELAGE STA 118 CANTED BULKHEAD PORT (MAKE FROM 29140 X 19-3/16)		1
- 7	152-31138-28	.TEE - FUSELAGE STA 118 CANTED BULKHEAD STBD (MAKE FROM 29140 X 19-3/16)		1
- 8	152-31138-43	.CHANNEL - FUSELAGE STA 118 CANTED BULKHEAD		1
- 9	152-31138-19	.CHANNEL - FUS STA 118 CANTED BULKHEAD PORT		1
	152-31138-23	.CHANNEL - FUS STA 118 CANTED BULKHEAD STBD		1
-10	152-31138-29	.CHANNEL - FUS STA 118 CANTED BULKHEAD PORT		1
	152-31138-21	.CHANNEL - FUS STA 118 CANTED BULKHEAD STBD		1
-11	152-31138-33	.CHANNEL - FUSELAGE STA 118 CANTED BULKHEAD		1
-12	152-31138-5	.ANGLE - FUS STA 118 CANTED BULKHEAD PORT		1
	152-31138-6	.ANGLE - FUS STA 118 CANTED BULKHEAD STBD		1
-13	152-31138-35	.DOUBLER - FUS STA 118 CANTED BHD (STBD)		1
-14	152-31138-47	.DOUBLER - FUS STA 118 CANTED BHD (PORT)		1
-15	151-54038	.BLOCK - ELECTRICAL PRESSURIZED		1
-16	151-31139	.PANEL - FUS STA 118 CANTED CTL FLD SUPPORT		1
-17	151-54356	.INSULATOR - THROUGH FUS STA 118 ELEC WIRE		2
-18	151-31762	.CLIP ASSY - FUSELAGE STA 118 BULKHEAD TO SEAT TRACK (STARBOARD)		1
	152-31868-800	.BRACKET ASSY - CANOPY RELEASE MECHANISM FUS STA 118 (AS PER EO 05-5E-6B/11)		1
-19	152-31867	..BRACKET ASSY - CANOPY RELEASE MECH PULLEY		1
	4S4D4-14	...SPACER - RIVET (NAA)		1
	4B16CP8-12	...BEARING - SINTERED OIL IMPREGNATED (NAA)		2
	13A-83017-10	..LEVER ASSY - CANOPY RELEASE MECHANISM		1
-20	151-318139-800	...SECTOR ASSY - CANOPY EMY REL MECHANISM		1
	151-318139-802	....SECTOR ASSY - CANOPY EMY REL MECHANISM		1
	151-318139-3	.....ARM - CANOPY EMY RELEASE MECHANISM		1
	151-318139-5	.....ARM - CANOPY EMY RELEASE MECHANISM		1
	151-318139-804	.....TUBE - CANOPY EMY RELEASE MECHANISM		1
-21	151-54425	....CLIP - INFLATABLE CANOPY SEAL EMERGENCY DUMP SWITCH		1
	4S4D5-8	....SPACER - RIVET (NAA)		1
-22	13A-83015	...CHANNEL ASSY - CANOPY RELEASE MECHANISM		2
	13A-83014	....BUSHING - CANOPY RELEASE MECHANISM		1
-23	13A-83016-10	...SHAFT ASSY - ALTERNATE CANOPY JETTISON		2
-24	S-1224-10-7	...PIN - TAPERED PLAIN (CAN)		2
-25	AN3-6A	..BOLT -		2
	AN960-10	..WASHER -		4
	AN960C10	..WASHER -		2
	AN365-1032	..NUT -		2
-26	AN3-7A	..BOLT -		2
	151-318141	..SPACER - CANOPY RELEASE MECHANISM PULLEY BRACKET BOLT		2
	2W1-12-24-32	..WASHER - PLAIN (NAA)		

FIGURE AND INDEX NUMBER	GROUP FUSELAGE MAJOR ASSEMBLY FUSELAGE STA 118 CANTED BULKHEAD PART NUMBER	1234567 NOMENCLATURE	CODE	UNITS PER ASSY
55 -	AN365-1032	••NUT -		2
	151-52229-3	•SEAL INSTL - ELEVATOR CTL PUSH-PULL TUBE		NP
-27	140-52242-3	••RING - ELEVR P/P TUBE SEAL BOOT RETAINING		1
-28	151-52219	••RING - ELEVATOR PUSH-PULL TUBE SEAL ATT		1
-29	AN520-10R7	••SCREW -		12
		OR		
	AN3-3A	••BOLT -		
	AN935-10	••WASHER -		12
	151-52230-7	••SEAL ASSY - ELEVR CONTROL PUSH-PULL TUBE		1
-30	151-52230-5	•••SEAL ASSY - ELEVR CONTROL PUSH-PULL TUBE		1
-31	151-52226-3	••••PIVOT - ELEVR CTL PUSH-PULL TUBE SEAL		1
-32	151-52226-4	••••PIVOT - ELEVR CTL PUSH-PULL TUBE SEAL		1
-33	151-52227	••••PIVOT - ELEVATOR CONTROL PUSH-PULL TUBE SEAL COLLAR		1
-34	151-52228	••••ARM ASSY - ELEVATOR CONTROL PUSH-PULL TUBE SEAL		1
-35	AN23-12	••••BOLT -		2
	AN960-10L	••••WASHER -		2
	AN320-3	••••NUT -		2
	AN380-2-2	••••COTTER-PIN -		2
-36	AN23-10	••••BOLT -		2
-37	4B21S3-010	••••BUSHING - SPACER (NAA)		4
	AN960-10L	••••WASHER -		2
	AN320-3	••••NUT -		2
	AN380-2-2	••••COTTER-PIN -		2
	151-52238	•••TUBE ASSY - ELEVATOR CONTROL PUSH-PULL PRESSURE SEAL		1
-38	140-52243	••••TUBE - ELEVATOR PUSH-PULL SEAL		1
-39	151-52225	••••COLLAR - ELEVR CTL PUSH-PULL SEAL TUBE		1
-40	140-52244	••••RING - ELEVR PUSH-PULL SEAL TUBE COLLAR		1
-41	140-52239	••••BOOT - ELEVATOR PUSH-PULL SEAL TUBE		1
-42	7S13-1032C10	•••SCREW - 100-DEG FLUSH HEAD CRE (NAA)		2
-43	4B21S3-007	•••BUSHING - SPACER (NAA)		2
	AN320-3	•••NUT -		2
	AN380-2-2	•••COTTER-PIN -		2
-44	151-52408	•BASE - RUDDER CONTROL PRESSURE SEAL PORT		1
-45	151-53119	•FITTING ASSY - PILOT RELIEF TUBE STA 118 BULKHEAD		1
		-000-		

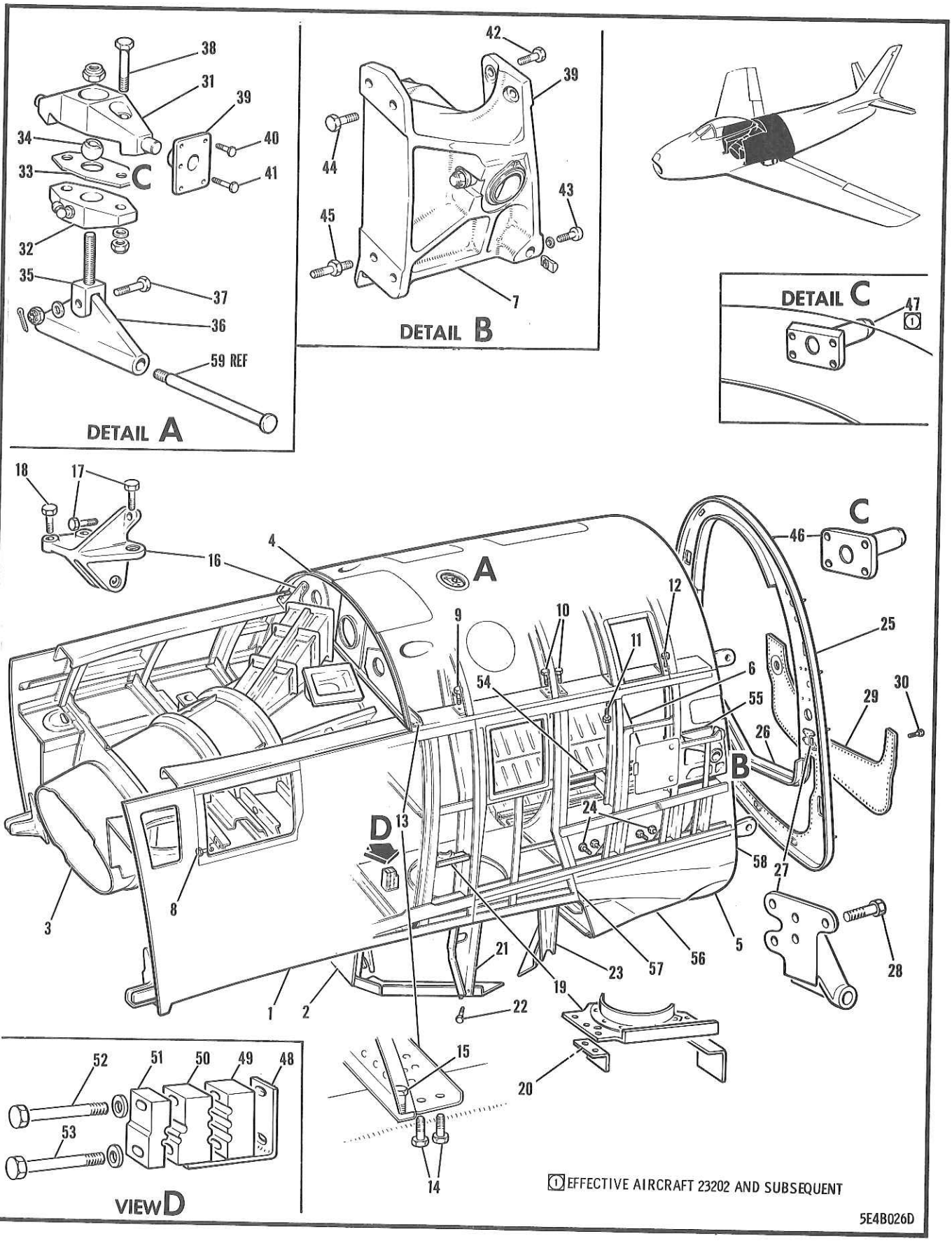

FIGURE 56 FUSELAGE STA 131-236 INTERMEDIATE SECTION

FIGURE AND INDEX NUMBER	GROUP FUSELAGE MAJOR ASSEMBLY FUSELAGE STA 131-236 INTERMEDIATE SECTION PART NUMBER	1234567 NOMENCLATURE	CODE	UNITS PER ASSY
56 -	13A-32001	FUSELAGE ASSY - INTERMEDIATE SECTION STA 131-236 (SEE FIG. 36)	001-100	1
	13A-32001-20	FUSELAGE ASSY - INTER SECTION STA 131-236	101-310	1
	13A-32001-100	FUSELAGE ASSY - INTER SECTION STA 131-236	311-370	1
	13A-32001-800	FUSELAGE ASSY - INTER SECTION STA 131-236	371-	1
- 1	13A-32003	•FRAME ASSY - FUSELAGE STA 131-236 PORT SIDE (SEE FIG. 62)		REF
	13A-32004	•FRAME ASSY - FUSELAGE STA 131-236 STARBOARD SIDE (SEE FIG. 63)		REF
- 2	13A-32005	•WELL ASSY - FUSELAGE STA 178-205 WHEEL (SEE FIG. 65)		REF
- 3	13A-32008	•DUCT ASSY - FUSELAGE STA 131-183 (SEE FIG. 58)		REF
- 4	13A-32002	•FRAME ASSY - FUSELAGE STA 178-235 UPPER (SEE FIG. 60)		REF
- 5	13A-32006	•FRAME ASSY - FUSELAGE STA 207-242 BOTTOM (SEE FIG. 61)		REF
- 6	13A-32007	•SHROUD ASSY - FUSELAGE STA 205-236 (SEE FIG. 61)		REF
- 7	13A-32136	•MOUNT ASSY - ORENDA ENGINE (PORT SIDE) (SEE FIG. 57)		REF
	13A-32147	•MOUNT ASSY - ORENDA ENGINE (STBD SIDE) (SEE FIG. 57)		REF
- 8	NAS221-10	•SCREW - (FUSELAGE STA 157-159 PORT SIDE)		3
	NAS221-9	•SCREW - (PORT SIDE)		1
	AN960-10L	•WASHER -		1
	AN365-1032	•NUT -		4
- 9	AN6-11A	•BOLT - MPI (FUS STA 190 UPPER FRAME ATT)		2
	AN960-616	•WASHER -		4
	AN365-624	•NUT -		2
-10	AN4-10A	•BOLT - MPI (FUS STA 205 UP. FRAME ATT)		8
	AN960D416L	•WASHER -		8
	AN365-428	•NUT -		8
-11	AN5-10A	•BOLT - (FUS STA 215 UPPER FRAME ATTACHING)		2
	AN960-516L	•WASHER -		2
	AN365-524	•NUT -		2
-12	AN4-11A	•BOLT - (FUS STA 225 UPPER FRAME ATTACHING)		16
	AN4-10A	•BOLT - MPI (FUS STA 225 UPPER FRAME ATT)		8
	AN960-416	•WASHER -		16
	AN365-428	•NUT -		16
-13	13A-32015	•CHANNEL ASSY - FUSELAGE STA 178 UPPER LONGERON TIE		1
-14	AN7-11A	•BOLT - (CHANNEL TO LONGERON ATTACHING)		4
	AN365-720	•NUT -		4
-15	AN3-5A	•BOLT - (FUS STA 178 UPPER FRAME ATTACHING)		1
	AN960-10	•WASHER -		1
	AN365-1032	•NUT -		1
-16	170-52204	•BRACKET - FUSELAGE STA 177 HOR/STAB CONTROL PULLEY MPI		1
-17	AN3-6A	•BOLT - (BRACKET ATTACHING)		2
-18	AN3-10A	•BOLT - (BRACKET ATTACHING)		2
	AN960-10	•WASHER -		3
	AN960D10	•WASHER -		1
	2W1AL13-16-72	•WASHER - PLAIN (NAA)		1
	AN365-1032	•NUT -		4
-19	161-58247	•SUPPORT ASSY - HYDRAULIC ACCUMULATOR LOWER	001-100	1
-20	161-58251	•ANGLE - HYDRAULIC ACCUM SUPPORT LWR RIGHT	001-100	1
-21	151-31276-1	•BRACKET ASSY - LONGERON TO LDG/GR DOOR JAMB FORWARD PORT		1
	151-31276-2	•BRACKET ASSY - LONGERON TO LDG/GR DOOR JAMB FORWARD STARBOARD		1

FIGURE AND INDEX NUMBER	GROUP FUSELAGE MAJOR ASSEMBLY FUSELAGE STA 131-236 INTERMEDIATE SECTION PART NUMBER	1234567 NOMENCLATURE	CODE	UNITS PER ASSY
56 -	13A-32001-11	•SHIM - (FUSELAGE STA 183 LOWER FRAME)		2
	AN3-6A	•BOLT - (BRACKET ATTACHING)		4
-22	AN3-4A	•BOLT - (BRACKET ATTACHING)		6
	AN960-10L	•WASHER -		2
	AN365-1032	•NUT -		6
-23	151-31277-11	•BRACKET ASSY - LONGERON TO LDG/GR DOOR JAMB REAR PORT		1
	151-31277-2	•BRACKET ASSY - LONGERON TO LDG/GR DOOR JAMB REAR STARBOARD		1
	AN3-5A	•BOLT - (BRACKET ATTACHING)		8
-24	AN3-7A	•BOLT - (FRAME TO LOWER LONGERON ATTACHING)		8
	AN960-10	•WASHER -		8
	AN365-1032	•NUT -		8
	13A-32044	•BULKHEAD ASSY - FORWARD FUS STA 236 CANTED	001-086	1
	13A-32044-801	•BULKHEAD ASSY - FORWARD FUS STA 236 CANTED	087-145	1
	13A-32044-803	•BULKHEAD ASSY - FORWARD FUS STA 236 CANTED	146-210	1
	13A-32044-805	•BULKHEAD ASSY - FORWARD FUS STA 236 CANTED	211-	1
-25	13A-32044-5	••FRAME ASSY - FUSELAGE STA 236 WEB PORT	001-086	1
	13A-32044-45	••FRAME - FUSELAGE STA 236 OUTBOARD PORT	087-	1
	13A-32044-51	••FRAME - FUSELAGE STA 236 INBOARD PORT		1
	13A-32044-7	••FRAME ASSY - FUSELAGE STA 236 WEB STBD	001-086	1
	13A-32044-75	••FRAME - FUSELAGE STA 236 OUTBOARD STBD	087-	1
-26	13A-32044-77	••FRAME - FUSELAGE STA 236 INBOARD STBD		1
-27	13A-96061	••BRACKET - FLIGHT CONTROL MANUAL CH/OV DISCONN FORWARD PORT SIDE MPI	001-210	1
	NAS464-3A9	••BOLT - (FRAME & BRACKET TO FRAME ATT)	001-210	4
-28	NAS464-3A6	••BOLT - (FRAME & BRACKET TO FRAME ATT)	001-210	2
	NAS464-3A6	••BOLT - (FRAME TO FRAME ATTACHING) (PORT)	211-	5
	AN960PD10L	••WASHER -		5
	AN364-1032	••NUT -		5
	NAS464-3A6	••BOLT - (FRAME TO FRAME ATTACHING) (STBD)		5
	AN960PD10	••WASHER -		5
	AN364-1032	••NUT -		5
-29	13A-32044-3	••WEB ASSY - FUSELAGE STA 236 CANTED		1
-30	AN3C5A	••BOLT - (WEB TO FRAME ATTACHING) OR		42
	NAS221-9	••SCREW - (WEB TO FRAME ATTACHING)		
	AN4C5A	••BOLT - (WEB TO FRAME ATTACHING) OR		16
	NAS222-10	••SCREW - (WEB TO FRAME ATTACHING)		
	AN960-10L	••WASHER -		42
	13A-51022	••RING - REAR FUS FUEL CELL GAUGE ADAPTER (STARBOARD SIDE)		1
	AN4C7A	••BOLT - (RING TO BULKHEAD ATTACHING) OR		3
	NAS222-14	••SCREW - (RING TO BULKHEAD ATTACHING)		
	AN960-416L	••WASHER -		3
	140-52040	••FAIRLEAD - CONTROL CABLE FUS STA 235 PORT		2
	13A-96077	••FAIRLEAD - TOW TARGET & CTL CABLE (PORT)		1
	13A-32001-91	•SHIM - INTERMEDIATE SECTION FUS STA 234	008-	AR
	13A-32026	•FITTING ASSY - ORENDA ENGINE FWD SUPPORT	001-370	1
	13A-32026-801	•FITTING ASSY - ORENDA ENGINE FWD SUPPORT	371-	1
	13A-32027-9	••BEAM ASSY - ORENDA ENGINE FORWARD SUPPORT		1
-31	13A-32027-3	•••BEAM - ORENDA ENGINE FORWARD SUPPORT MPI		1
-32	13A-32027-5	•••CAP - ORENDA ENGINE FORWARD SUPPORT MPI		1
	AN960D416L	•••WASHER -		2
	AN944-301	•••FITTING -		1
-33	13A-32032	••SHIM - ORENDA ENGINE FORWARD SUPPORT		4
-34	13A-32031	••BALL - ORENDA ENGINE FORWARD SUPPORT MPI	001-370	1
	13A-32036	••BALL - ORENDA ENGINE FORWARD SUPPORT MPI	371-	1

FIGURE AND INDEX NUMBER	PART NUMBER	1234567 NOMENCLATURE	CODE	UNITS PER ASSY
	GROUP	FUSELAGE		
	MAJOR ASSEMBLY	FUSELAGE STA 131-236 INTERMEDIATE SECTION		
56 -35	13A-32029	••FORK-END - ORENDA ENGINE FWD SUPPORT MPI		1
-36	13A-32030	••LINK - ORENDA ENGINE FORWARD SUPPORT MPI		1
-37	NAS464-7-16	••BOLT - (FORK-END TO LINK ATTACHING)		1
	AN960-716	••WASHER -		2
	AN320-7	••NUT -		1
	AN380-3-4	••COTTER-PIN -		1
	AN364-820	••NUT -		1
-38	AN7-16	••BOLT - (BEAM TO CAP ATTACHING)		2
	AN960-716	••WASHER -		2
	AN365-720	••NUT -		2
-39	13A-32028	•BRACKET - ORENDA ENGINE FWD SUPPORT MPI		2
-40	AN4-7A	•BOLT - (BRACKET ATTACHING)		8
-41	AN4-5A	•BOLT - (BRACKET ATTACHING)		2
	AN960D416	•WASHER -		10
	AN365-428	•NUT -		10
-42	AN177-13A	•BOLT - (ENGINE MOUNT STA 236 UPPER ATT)	001-025	4
	AN177-12A	•BOLT - (ENGINE MOUNT STA 236 UPPER ATT)	026-200	4
	NAS147-28	•BOLT - (ENGINE MOUNT STA 236 UPPER ATT)	201-	4
	AN960D716	•WASHER -	001-200	4
	AN960D716	•WASHER -	201-	8
	NAS143-7C	•WASHER -	201-	4
	AN365-720	•NUT -		4
-43	AN177-13A	•BOLT - (ENGINE MOUNT STA 236 LOWER ATT)	001-200	4
	NAS147-24	•BOLT - (ENGINE MOUNT STA 236 LOWER ATT)	201-	4
	AN960D716	•WASHER -	001-200	4
	NAS143-7C	•WASHER -	201-	3
	13A-32001-86	•WASHER - FUSELAGE INTER SECTION ENG MOUNT (MAKE FROM NAS143-7C)	201-	1
	1452-070	•NUT - HIGH TENSILE BARREL MPI (ESN) (ENGINE MOUNT STA 236 LOWER RTNG)		4
-44	AN177-12A	•BOLT - (ENGINE MOUNT FUS STA 226 ATT)	001-025	6
	AN177-11A	•BOLT - (ENGINE MOUNT FUS STA 226 ATT)	026-	6
-45	13A-32121	•BOLT - FRAME STA 226 SPECIAL (ENGINE MOUNT RETAINING LOWER PORT SIDE ONLY)		2
	AN960D716	•WASHER -		8
	AN365-720	•NUT -		8
	152-31519-3	•PIN - FUSELAGE STA 236 CANTED MPI (LOWER)		6
-46	13A-32194-3	•PIN - FUSELAGE STA 236 CANTED MPI (UPPER)	001-145	8
	13A-32194-3	•PIN - FUSELAGE STA 236 CANTED MPI (UPPER)	146-201	2
	13A-32194-5	•PIN - FUSELAGE STA 236 CANTED MPI (UPPER)	146-201	6
-47	13A-32194-5	•PIN - FUSELAGE STA 236 CANTED MPI (UPPER)	202-	8
	13A-32194-7	•PIN - FUSELAGE STA 236 CANTED MPI (UPPER)	146-	2
	13A-32192	•PIN - FUS STA 236 CANTED MPI (STBD UPPER) (MAKE FROM 13A-32194-3)	001-145	1
	13A-32193-7	•PIN - FUS STA 236 CANTED MPI (STBD UPPER)	146-	1
	AN509-10R15	•SCREW - (PIN TO BULKHEAD ATTACHING)	001-212	4
	AN509-10R13	•SCREW - (PIN TO BULKHEAD ATTACHING)	213-	4
	AN960D10	•WASHER -		4
	AN365-1032	•NUT -		4
	13A-71147	•SUPPORT ASSY - HYD LINE BLOCK FUS STA 181		1
-48	13A-71145	••ANGLE ASSY - HYD LINE BLOCK FUS STA 181		1
	13A-71146	••BLOCK ASSY - HYDRAULIC LINE FUS STA 181		1
-49	13A-71146-3	•••BLOCK - HYDRAULIC LINE FUSELAGE STA 181		1
-50	13A-71146-5	•••BLOCK - HYDRAULIC LINE FUSELAGE STA 181		1
-51	13A-71146-9	•••BLOCK - HYDRAULIC LINE FUSELAGE STA 181		1
-52	AN3-25A	••BOLT - (BLOCK RETAINING)		1
-53	AN3-27A	••BOLT - (BLOCK RETAINING)		1
	AN960PD416L	••WASHER -		2
-54	13A-32189	•STRIP ASSY - RUBBING FUS STA 205-225(PORT)		NP
	13A-32189-3	••CHANNEL - RUBBING STRIP		1

FIGURE AND INDEX NUMBER	GROUP / MAJOR ASSEMBLY / PART NUMBER	FUSELAGE / FUSELAGE STA 131-236 INTERMEDIATE SECTION / 1234567 NOMENCLATURE	CODE	UNITS PER ASSY
56 -	13A-32189-9	••STRIP - RUBBING		1
	13A-32190	••BRACKET - RUBBING STRIP SUPPORT		1
	13A-32189-5	••PACKING - (RUBBING STRIP)		1
	13A-32189-7	••ANGLE - (RUBBING STRIP)		1
	AN525-416R10	•SCREW - (RUBBING STRIP ATTACHING)		1
	AN525-416R11	•SCREW - (RUBBING STRIP ATTACHING)		3
	AN960-416	•WASHER -		4
	AN365-428	•NUT -		4
	13A-32180	•WEB ASSY - FUSELAGE STA 225-235(PORT SIDE)	001-370	1
-55	13A-31280-3	••WEB - (FUSELAGE STA 225-235 PORT)	001-370	1
	13A-31280-5	••STRIP - (WEB RUBBING)	001-370	1
	13A-30012	•WEB ASSY - FUS STA 225-235 (PORT SIDE)	371-	1
	13A-32181	•WEB - FUSELAGE STA 225-235(STARBOARD SIDE)	001-370	1
	13A-30013	•WEB ASSY - FUS STA 225-235(STARBOARD SIDE)	371-	1
	AN525-416R10	•SCREW - (WEB ATTACHING)	001-370	33
	AN525-416R10	•SCREW - (WEB ATTACHING)	371-	44
	AN525-416R11	•SCREW - (WEB ATTACHING)		14
	AN525-416R12	•SCREW - (WEB ATTACHING)	001-370	12
	AN960-416	•WASHER -		26
	AN364-428	•NUT -	001-370	26
	AN365-428	•NUT -	371-	26
	151-31061-1	•FILLET INSTL - FUSELAGE TO WING TE (PORT)		NP
	151-31061-2	•FILLET INSTL - FUSELAGE TO WING TE (STBD)		NP
-56	151-31060-1	••FILLET ASSY - WING TRAILING EDGE (PORT)		1
	151-31060-2	••FILLET ASSY - WING TRAILING EDGE (STBD)		1
-57	13A-32001-3	•SKIN - FUSELAGE STA 178-207 LWR FRAME PORT		1
	13A-32001-4	•SKIN - FUSELAGE STA 178-207 LWR FRAME STBD		1
-58	151-31538-3	•SKIN - FUSELAGE STA 207-242 BOTTOM PORT		1
	151-31538-4	•SKIN - FUSELAGE STA 207-242 BOTTOM STBD		1
-59	13A-60008	PIN - ORENDA ENGINE FORWARD SUPPORT (SEE SECTION 5)		REF

-000-

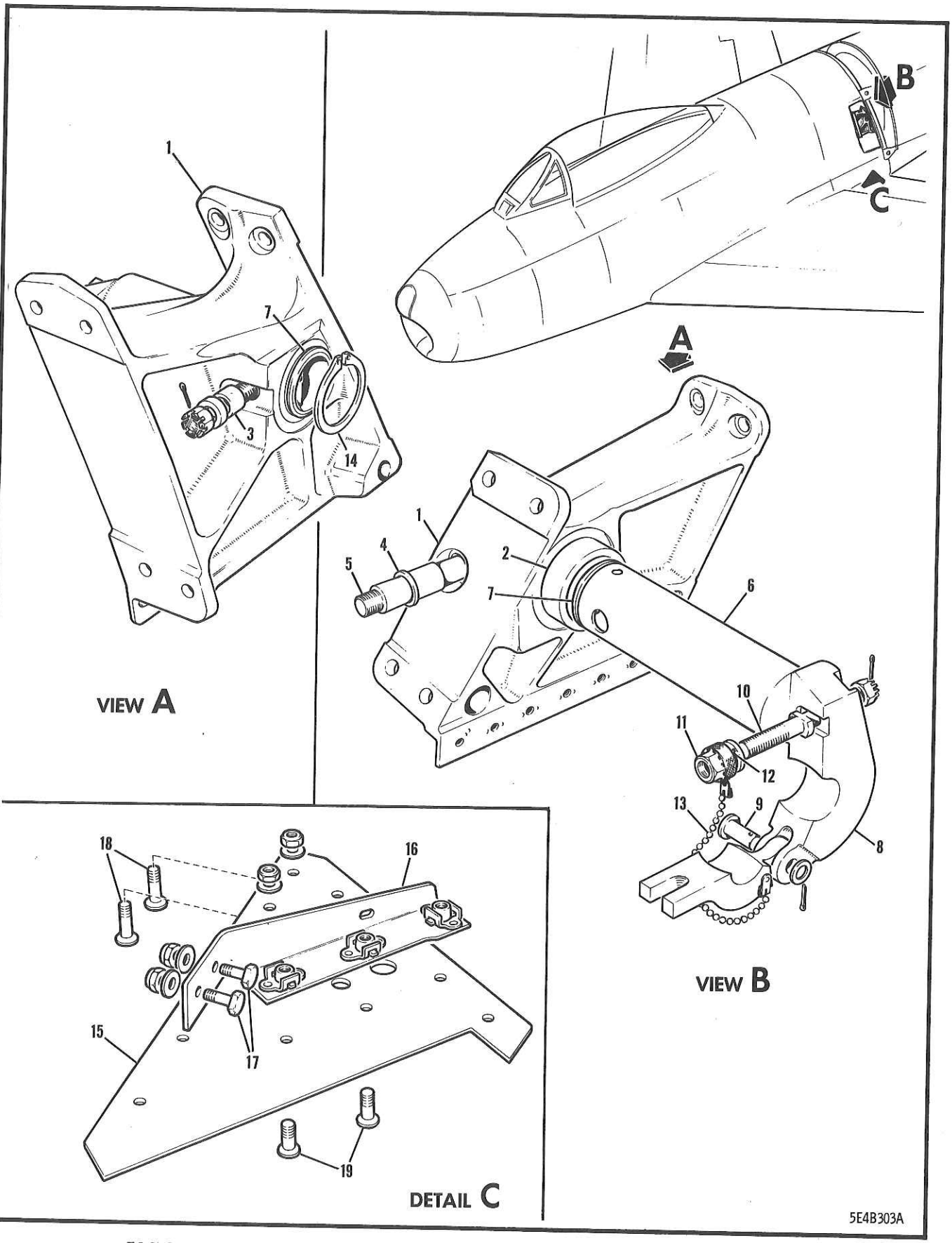

FIGURE 57 ENGINE MOUNT & FUSELAGE TO WING FILLET PLATE & ANGLE

FIGURE AND INDEX NUMBER	GROUP FUSELAGE MAJOR ASSEMBLY ENGINE MOUNT & FILLET PLATE & ANGLE PART NUMBER	1234567 NOMENCLATURE	CODE	UNITS PER ASSY
57 -	13A-32136	MOUNT ASSY - ORENDA ENGINE (PORT SIDE) (SEE FIG. 56)		1
	13A-32147	MOUNT ASSY - ORENDA ENGINE (STARBOARD SIDE) (SEE FIG. 56)		1
	13A-39102-5	.TRUNNION ASSY - ORENDA ENGINE MAIN (PORT)	001-025	1
	13A-32019-5	.TRUNNION ASSY - ORENDA ENGINE MAIN (PORT)	026-	1
	13A-39101-5	.TRUNNION ASSY - ORENDA ENGINE MAIN (STBD)	001-025	1
	13A-32018-5	.TRUNNION ASSY - ORENDA ENGINE MAIN (STBD)	026-	1
- 1	13A-39102-3	..TRUNNION - ORENDA ENG MAIN (PORT SIDE)	001-025	1
	13A-32019-3	..TRUNNION - ORENDA ENG MAIN (PORT SIDE)	026-	1
	13A-39101-3	..TRUNNION - ORENDA ENG MAIN (STBD SIDE)	001-025	1
	13A-32018-3	..TRUNNION - ORENDA ENG MAIN (STBD SIDE)	026-	1
- 2	13A-32086	..BUSHING - ENGINE MAIN TRUNNION		1
- 3	13A-32148	..BUSHING - ENGINE MAIN TRUNNION		1
- 4	13A-32149	..BUSHING - ENGINE MAIN TRUNNION		1
- 5	13A-32090	.PIN - ORENDA ENGINE MOUNT MPI		1
	AN975-7	.WASHER -		1
	AN320-7	.NUT -		1
	AN380-3-3	.COTTER-PIN -		1
	13A-32016	.FITTING ASSY - ORENDA ENGINE MOUNT MPI (PORT SIDE)		1
	13A-32017	.FITTING ASSY - ORENDA ENGINE MOUNT MPI (STARBOARD SIDE)		1
- 6	13A-32139-5	..SHAFT ASSY - ORENDA ENGINE MOUNT MPI (PORT SIDE)		1
	13A-32150-5	..SHAFT ASSY - ORENDA ENGINE MOUNT MPI (STARBOARD SIDE)		1
- 7	13A-32139-3	...SHAFT - ORENDA ENGINE MOUNT (PORT) (MAKE FROM 13A-32139)		1
	13A-32150-3	...SHAFT - ORENDA ENGINE MOUNT (STARBOARD) (MAKE FROM 13A-32150)		1
- 8	13A-32142-3	..HINGE - ORENDA ENG MOUNT MPI (PORT SIDE) (MAKE FROM 13A-32142) OR		1
	13A-39107	..HINGE - ORENDA ENG MOUNT MPI (PORT SIDE)		
	13A-32153-3	..HINGE - ORENDA ENG MOUNT MPI (STBD SIDE) (MAKE FROM 13A-32153) OR		1
	13A-39105	..HINGE - ORENDA ENG MOUNT MPI (STBD SIDE)		
- 9	AN396-27	..PIN -	001-300	1
	NAS464-6-13	..BOLT -	301-	1
	AN320-6	..NUT -	301-	1
	AN960-616	..WASHER -		1
	AN380-3-3	..COTTER-PIN -		1
-10	13A-32146-1	.STUD - ORENDA ENG MOUNT MPI (PORT SIDE)		1
	13A-32146-3	.STUD - ORENDA ENG MOUNT MPI (STBD SIDE)		1
	AN310-6	.NUT -		1
	AN380-3-3	.COTTER-PIN -		1
	13A-32145	.NUT ASSY - ORENDA ENGINE MOUNT		1
-11	13A-32144	..NUT - ORENDA ENGINE MOUNT MPI		1
-12	134-31916	..RING - DROP CHAIN ATTACHING		1
	134-31922	..CHAIN ASSY - ENGINE MOUNT REM PIN DROP		1
	134-31922-2	...FASTENER - REMOVABLE PIN DROP CHAIN (MAKE FROM 2C28 (NAA))		1
	134-31922-4	...FASTENER - REMOVABLE PIN DROP CHAIN (MAKE FROM 2C28 (NAA))		1
-13	9C1-1-6	...CHAIN - BEAD (NAA)		1
	AN960D6	.WASHER -		1
-14	NAS51-200	.RING -		1
	151-31792-1	PLATE & ANGLE INSTL - FUSELAGE TO WING FILLET PORT (SEE FIG. 1)	001-210	NP

FIGURE AND INDEX NUMBER	GROUP FUSELAGE MAJOR ASSEMBLY ENGINE MOUNT & FILLET PLATE & ANGLE PART NUMBER	1234567 NOMENCLATURE	CODE	UNITS PER ASSY
57 -	151-31792-801	PLATE & ANGLE INSTL - FUSELAGE TO WING FILLET PORT	211-	NP
	151-31792-2	PLATE & ANGLE INSTL - FUSELAGE TO WING FILLET STARBOARD (SEE FIG. 1)		NP
-15	151-31793-3	•PLATE - FUSELAGE STA 201-211 FAIRING PORT	001-210	1
	151-31793-951	•PLATE - FUSELAGE STA 201-211 FAIRING PORT	211-	1
	151-31793-4	•PLATE - FUSELAGE STA 201-211 FAIRING STBD		1
-16	151-31794-1	•ANGLE ASSY - FUS STA 201-211 FAIRING PORT		1
	151-31794-2	•ANGLE ASSY - FUS STA 201-211 FAIRING STBD		1
-17	AN3-4A	•BOLT -		2
	AN960-10L	•WASHER -		2
	AN365-1032	•NUT -		2
-18	AN509-8-9	•SCREW -		2
	AN960-8	•WASHER -		2
	AN365-832	•NUT -		2
-19	AN509-8-8	•SCREW -		9
		-000-		

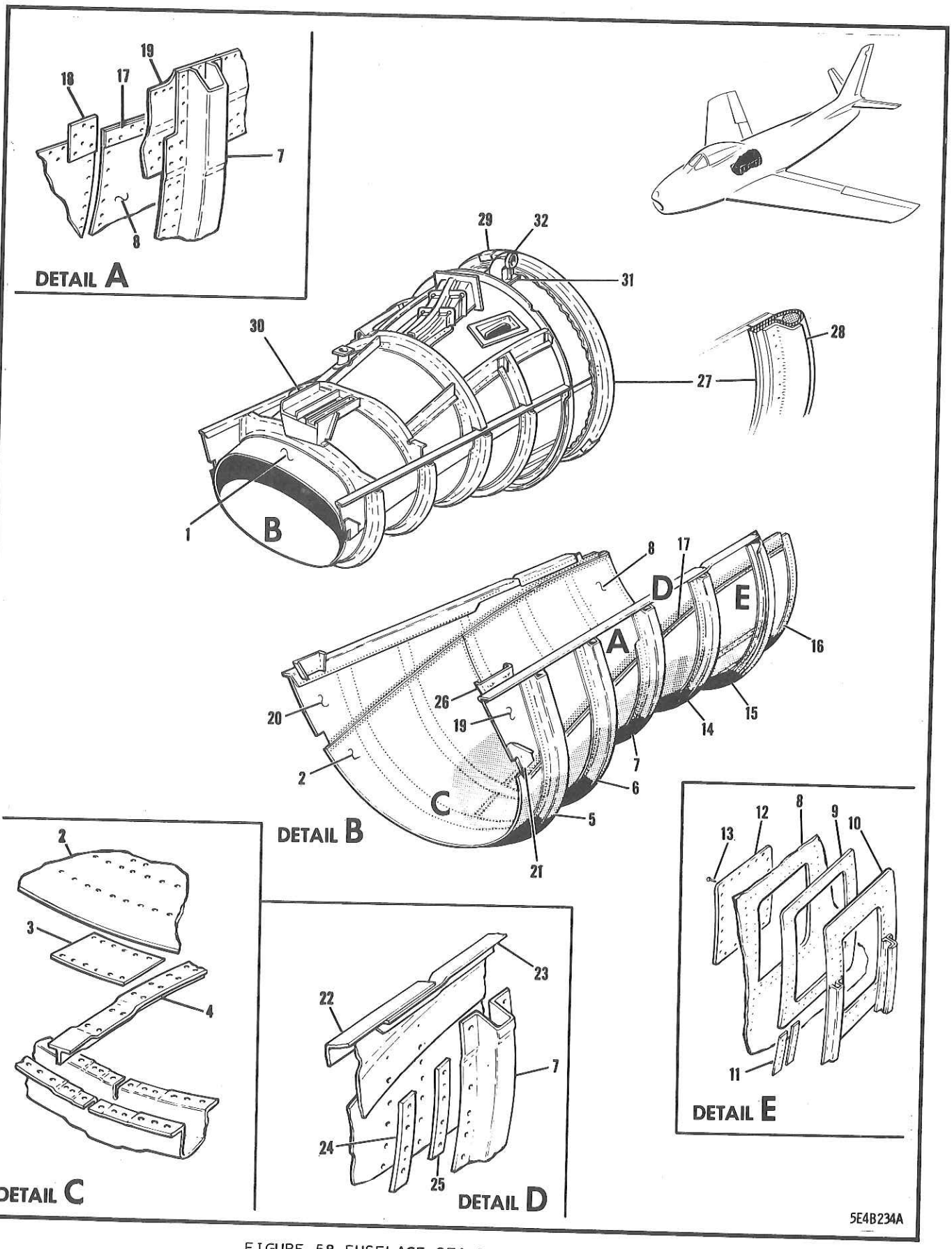

FIGURE 58 FUSELAGE STA 131-183 AIR DUCT

FIGURE AND INDEX NUMBER	GROUP FUSELAGE MAJOR ASSEMBLY FUSELAGE STA 131-183 AIR DUCT PART NUMBER	1234567 NOMENCLATURE	CODE	UNITS PER ASSY
58 -	13A-32008	DUCT ASSY - FUSELAGE STA 131-183 (SEE FIG. 56)		1
- 1	172-31504-800	•DUCT ASSY - FUSELAGE STA 131-183 UPPER (SEE FIG. 59)		REF
	172-31505	•DUCT ASSY - FUSELAGE STA 131-183 LOWER		1
- 2	172-31505-15	••SKIN - LOWER DUCT FORWARD		1
- 3	172-31505-13	••DOUBLER - FUSELAGE STA 133 & 144 LOWER DUCT FRAME		2
- 4	172-31505-23	••TEE - FUSELAGE STA 130-178 LOWER DUCT		1
- 5	172-31505-3	••FRAME - FUSELAGE STA 133 LOWER DUCT		1
- 6	172-31505-5	••FRAME - FUSELAGE STA 144 LOWER DUCT		1
- 7	172-31505-7	••FRAME - FUSELAGE STA 155 LOWER DUCT		1
	172-31505-35	••SKIN ASSY - FUSELAGE STA 155-183 LWR DUCT		1
- 8	172-31505-31	•••SKIN - FUS STA 155-183 LOWER DUCT REAR		1
- 9	172-31505-39	•••DOUBLER - FUSELAGE STA 166-179 DOOR PORT		1
	172-31505-40	•••DOUBLER - FUSELAGE STA 166-179 DOOR STBD		1
-10	172-31505-37	•••DOUBLER - FUSELAGE STA 166-179 DOOR PORT		1
	172-31505-38	•••DOUBLER - FUSELAGE STA 166-179 DOOR STBD		1
-11	172-31505-45	••SHIM - FUSELAGE STA 166 LOWER DUCT		4
-12	172-31505-33	••DOOR - FUS STA 167-178 LWR DUCT ACC PORT		1
	172-31505-34	••DOOR - FUS STA 167-178 LWR DUCT ACC STBD		1
-13	AN509-10R8	••SCREW -		48
-14	172-31505-27	••FRAME - FUSELAGE STA 166 LOWER DUCT		1
-15	172-31505-25	••CHANNEL - FUSELAGE STA 178 LOWER DUCT		1
-16	172-31505-9	••DOUBLER - FUSELAGE STA 183 LOWER DUCT		1
-17	172-31505-49	••SHIM - FUS STA 155-180 LOWER DUCT PORT		1
	172-31505-50	••SHIM - FUS STA 155-180 LOWER DUCT STBD		1
-18	172-31505-53	••SHIM - FUSELAGE STA 155 LOWER DUCT		2
-19	172-31505-11	••WEB - LOWER DUCT PORT SIDE		1
-20	172-31505-12	••WEB - LOWER DUCT STARBOARD SIDE		1
-21	172-31505-19	••DOUBLER - LOWER DUCT WEB PORT SIDE		1
	172-31505-20	••DOUBLER - LOWER DUCT WEB STARBOARD SIDE		1
-22	172-31505-17	••ANGLE - FUS STA 126-168 LOWER DUCT PORT		1
	172-31505-18	••ANGLE - FUS STA 126-168 LOWER DUCT STBD		1
-23	172-31505-21	••ANGLE - FUS STA 165-178 LOWER DUCT PORT		1
	172-31505-22	••ANGLE - FUS STA 165-178 LOWER DUCT STBD		1
-24	172-31505-47	••SHIM - FUSELAGE STA 166 LOWER DUCT PORT		1
	172-31505-48	••SHIM - FUSELAGE STA 166 LOWER DUCT STBD		1
-25	172-31505-43	••SHIM - FUSELAGE STA 166 LOWER DUCT PORT		1
	172-31505-44	••SHIM - FUSELAGE STA 166 LOWER DUCT STBD		1
-26	151-54193-10	••BRACKET - ELECTRICAL VOLTAGE REGULATOR		1
-27	13A-32008-11	•SEAL ASSY - FUSELAGE STA 183 DUCT		1
-28	13A-32008-19	•FRAME - FUSELAGE STA 183 DUCT PORT SIDE		1
	13A-32008-3	•FRAME - FUSELAGE STA 183 DUCT STBD SIDE		1
-29	13A-32008-5	•ANGLE - FUSELAGE STA 183 FRAME FASTENING		2
-30	161-74044	•SUPPORT ASSY - RADAR RECR/XMTR		1
	13A-32008-17	•ANGLE - FUSELAGE STA 183 AIR DISCH DUCT		1
-31	172-53354	•GASKET - H/VENT COOLING AIR DISCHARGE DUCT		1
-32	13A-74034	•DUCT ASSY - HEAT & VENT FAN COOLING AIR DISCHARGE		1

-000-

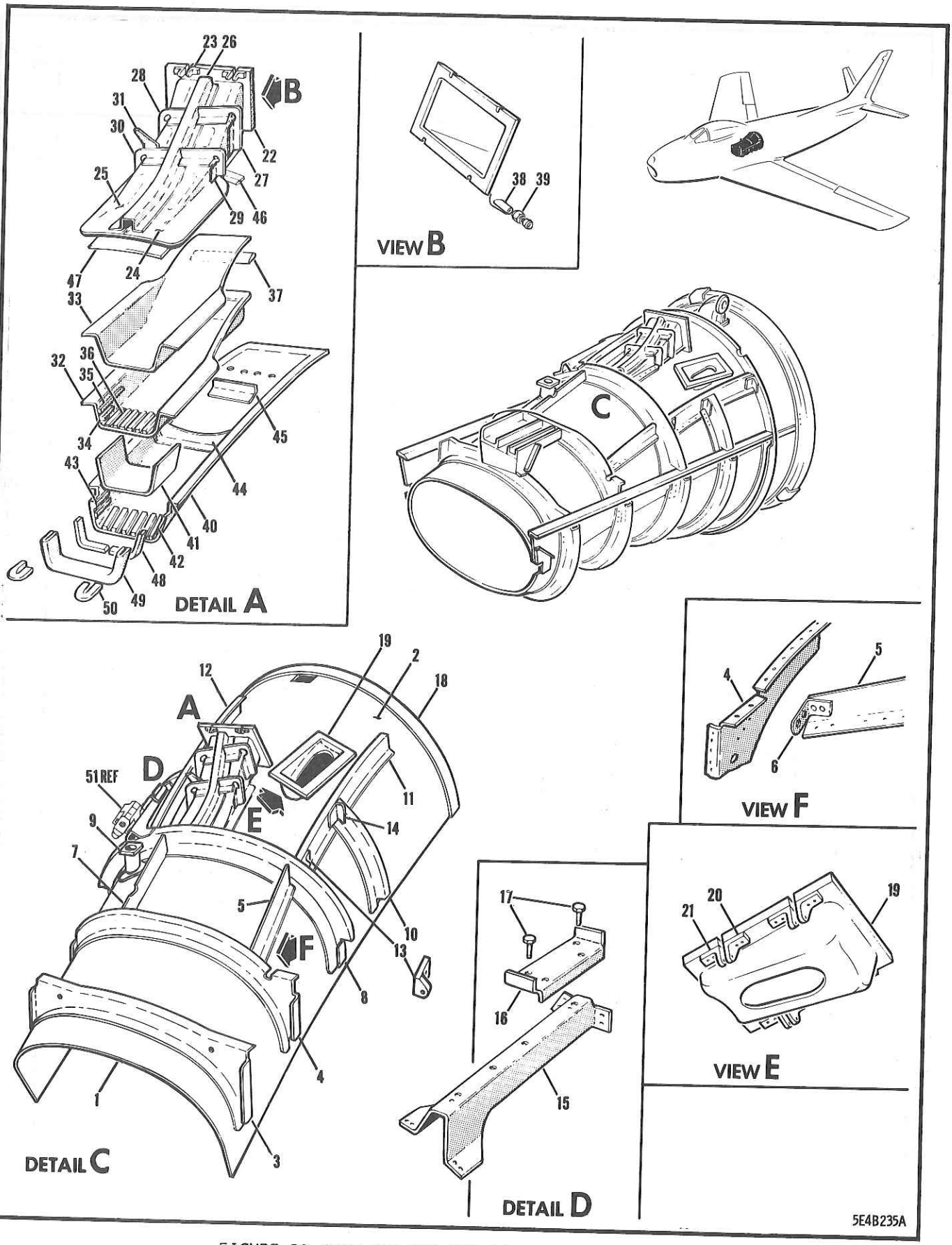

FIGURE 59 FUSELAGE STA 131-183 UPPER AIR DUCT

FIGURE AND INDEX NUMBER	PART NUMBER	1234567 NOMENCLATURE	CODE	UNITS PER ASSY
	GROUP FUSELAGE			
	MAJOR ASSEMBLY FUSELAGE STA 131-183 UPPER AIR DUCT			
59 -	172-31504-800	DUCT ASSY - UPPER FUSELAGE STA 131-183 (SEE FIG. 58)		1
- 1	172-31504-5	•SKIN - UPPER DUCT FUSELAGE STA 130-155		1
- 2	172-31504-3	•SKIN - UPPER DUCT FUSELAGE STA 155-183		1
- 3	172-31504-17	•FRAME - UPPER DUCT FUSELAGE STA 133		1
- 4	172-31504-43	•FRAME - UPPER DUCT FUSELAGE STA 144		1
- 5	172-31504-35	•STIFFENER - UPPER DUCT FUSELAGE STA 144-155 (PORT SIDE)		1
- 6	172-31504-27	•CLIP - STIFFENER ATTACHING FUSELAGE STA 144 (PORT SIDE)		1
- 7	172-31504-33	•STIFFENER - UPPER DUCT FUSELAGE STA 144-155 (STARBOARD SIDE)		1
	172-31504-29	•CLIP - STIFFENER ATTACHING FUSELAGE STA 144 (STARBOARD SIDE)		1
- 8	172-31504-13	•FRAME - UPPER DUCT FUSELAGE STA 155		1
	172-31504-21	•SHIM - UPPER DUCT FUSELAGE STA 155		1
- 9	151-53311	•DUCT ASSY - H/VENT EMERGENCY RAM STA 152		1
	172-31504-23	•DOUBLER - HEAT & VENT DUCT FUSELAGE STA 152 (STARBOARD SIDE)		1
-10	172-31504-9	•FRAME - UPPER DUCT FUS STA 166 (PORT SIDE)		1
	172-31504-10	•FRAME - UPPER DUCT FUS STA 166 (STBD SIDE)		1
-11	172-31504-11	•CHANNEL - UPPER DUCT FUS STA 155-178(PORT)		1
-12	172-31504-12	•CHANNEL - UPPER DUCT FUS STA 155-178(STBD)		1
-13	172-31504-25	•CLIP - FRAME TO CHANNEL ATTACHING FUSELAGE STA 155 (PORT SIDE)		1
	172-31504-26	•CLIP - FRAME TO CHANNEL ATTACHING FUSELAGE STA 155 (STARBOARD SIDE)		1
•-14	172-31504-19	•CLIP - FRAME TO CHANNEL ATTACHING FUSELAGE STA 166 (PORT SIDE)		1
	172-31504-20	•CLIP - FRAME TO CHANNEL ATTACHING FUSELAGE STA 166 (STARBOARD SIDE)		1
-15	151-58440-800	•BRACKET ASSY - HYDRAULIC FILTER FUSELAGE STA 158 (STARBOARD SIDE)		1
-16	170-58252-5	•BRACKET ASSY - HYDRAULIC FILTER FUSELAGE STA 158 (STARBOARD SIDE)		2
-17	AN3-4A	•BOLT -		1
-18	172-31504-7	•DOUBLER - UPPER DUCT REINF FUS STA 183		1
-19	172-53360	•DUCT ASSY - HEAT & VENT PRIMARY EXCHANGER COOLING AIR INLET		4
-20	172-53377-1	••ANGLE - HEAT & VENT HEAT EXCH DUCT ATT LH		4
-21	172-53377-2	••ANGLE - HEAT & VENT HEAT EXCH DUCT ATT RH		1
	172-53370	•DUCT ASSY - H/VENT HEAT EXCHANGER INTAKE		1
-22	172-53370-11	••FLANGE - HEAT EXCHANGER INTAKE		4
-23	172-53377-1	••ANGLE - HEAT & VENT HEAT EXCH DUCT ATT LH		4
	172-53377-2	••ANGLE - HEAT & VENT HEAT EXCH DUCT ATT RH		1
-24	172-53370-3	••SKIN - HEAT EXCHANGER INTAKE		1
-25	172-53370-5	••SKIN - HEAT EXCHANGER INTAKE		1
-26	172-53370-37	••CHANNEL - HEAT EXCHANGER INTAKE DUCT		1
-27	172-53370-29	••STIFFENER - HEAT EXCHANGER INTAKE (PORT)		1
-28	172-53370-31	••STIFFENER - HEAT EXCHANGER INTAKE (STBD)		1
-29	172-53370-33	••STIFFENER - HEAT EXCHANGER INTAKE (PORT)		1
-30	172-53370-35	••STIFFENER - HEAT EXCHANGER INTAKE (STBD)		1
-31	172-53403	••BRACKET - H/VENT HOT AIR BY-PASS LINE		1
	172-53370-27	••DUCT ASSY - H/VENT HEAT EXCHANGER INTAKE		1
-32	172-53370-9	•••SKIN - HEAT EXCHANGER INTAKE		1
-33	172-53370-7	•••SKIN - HEAT EXCHANGER INTAKE		2
-34	172-53370-15	•••FILLER - HEAT EXCHANGER INTAKE	001-034	2
-35	172-53370-17	•••FILLER - HEAT EXCHANGER INTAKE	035-	2
	172-53370-917	•••FILLER - HEAT EXCHANGER INTAKE		6
-36	172-53370-13	•••FILLER - HEAT EXCHANGER INTAKE		

FIGURE AND INDEX NUMBER	GROUP FUSELAGE MAJOR ASSEMBLY FUSELAGE STA 131-183 UPPER AIR DUCT PART NUMBER	1234567 NOMENCLATURE	CODE	UNITS PER ASSY
59 -37	172-53370-23	•••STIFFENER - HEAT EXCHANGER INTAKE		1
-38	172-53370-25	••TUBE - HEAT EXCHANGER INTAKE		1
	AN819-10Z	••SLEEVE -		1
-39	AN818-10D	••NUT -		1
	172-53371	•FAIRING ASSY - HEAT & VENT HEAT EXCHANGER INTAKE DUCT		1
-40	172-53371-3	••FAIRING - HEAT EXCHANGER INTAKE		1
-41	172-53371-5	••FAIRING - HEAT EXCHANGER INTAKE		1
-42	172-53371-7	••SPACER - HEAT EXCHANGER INTAKE		6
-43	172-53371-9	••SPACER - HEAT EXCHANGER INTAKE		4
-44	172-53371-11	••STIFFENER - HEAT EXCHANGER INTAKE		1
-45	172-53371-13	••STIFFENER - HEAT EXCHANGER INTAKE		1
-46	172-31504-39	•SEAL - UPPER DUCT HEAT EXCHANGER INTAKE		1
	172-31504-37	•RETAINER - UPPER DUCT HEAT EXCHANGER INTAKE SEAL		1
-47	172-31504-41	•SHIM - UPPER DUCT HEAT EXCHANGER INTAKE		1
-48	172-53373-5	•FILLER - HEAT & VENT COOLING AIR INLET		1
	172-53373-3	•FILLER - HEAT & VENT COOLING AIR INLET		1
-49	172-53372	•FAIRING - HEAT & VENT COOLING AIR INLET		1
-50	172-53366	•FAIRING - H/VENT HEAT EXCHANGER DUCT LE LH		1
	172-53367	•FAIRING - H/VENT HEAT EXCHANGER DUCT LE RH		1
-51	MS28720-8	FILTER - HYDRAULIC POWER CONTROL (SEE SECTION 11)		REF
		-000-		

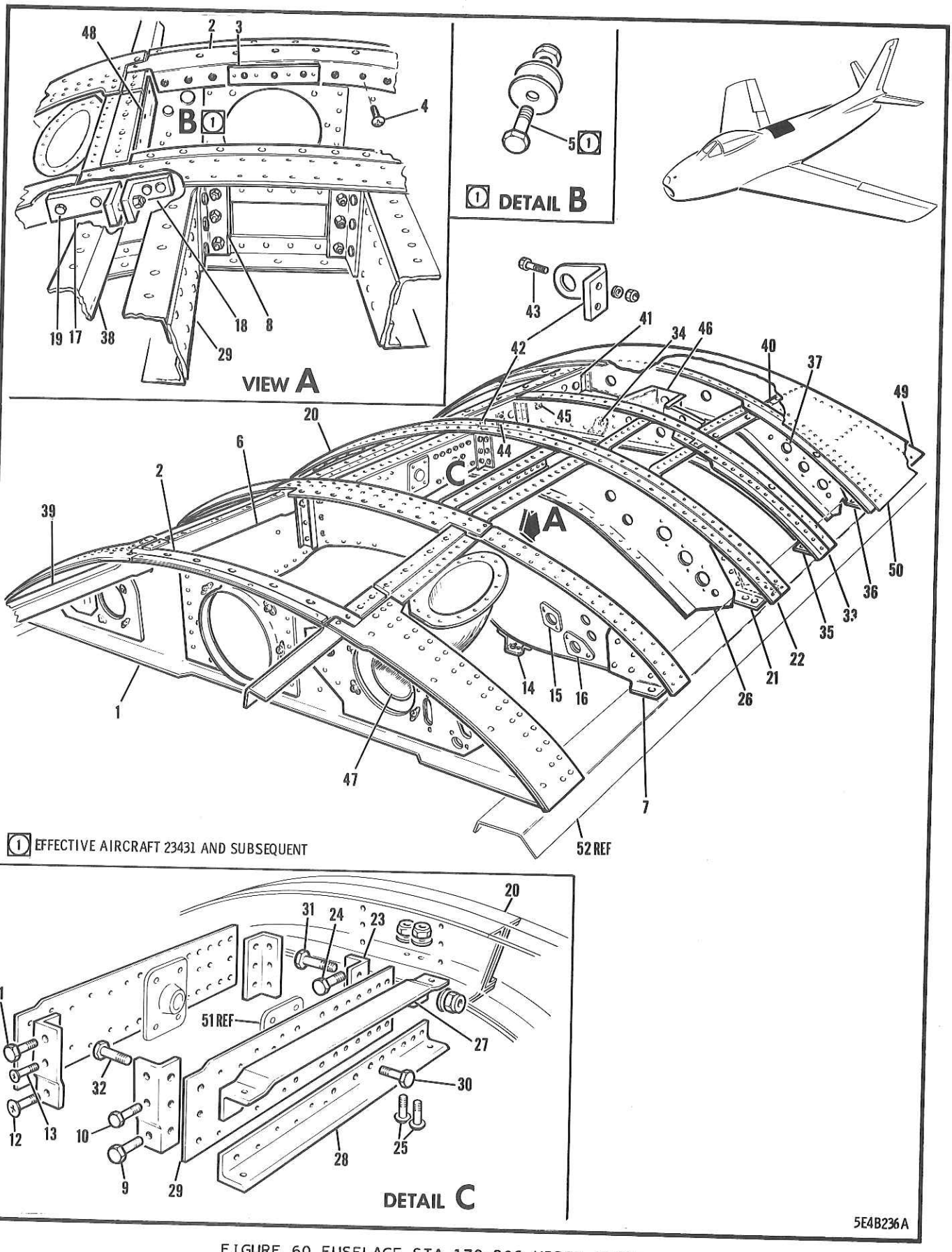

FIGURE 60 FUSELAGE STA 178-236 UPPER FRAME

FIGURE AND INDEX NUMBER	GROUP FUSELAGE MAJOR ASSEMBLY FUSELAGE STA 178-236 UPPER FRAME PART NUMBER	1234567 NOMENCLATURE	CODE	UNITS PER ASSY
60 -	13A-32002	FRAME ASSY - FUSELAGE STA 178-236 TOP (SEE FIG. 56)	001-370	1
	13A-32002-800	FRAME ASSY - FUSELAGE STA 178-236 TOP	371-	1
	13A-32035	•BULKHEAD ASSY - FUSELAGE STA 178 UPPER		1
- 1	13A-32035-3	••FRAME - FUSELAGE STA 178 BULKHEAD UPPER		1
- 2	13A-32035-9	••ANGLE - FUSELAGE STA 178 BULKHEAD UPPER		1
- 3	13A-32035-11	••FILLER - FUSELAGE STA 178 BULKHEAD UPPER		1
- 4	AN520-10R8	••SCREW - (ANGLE TO FRAME ATTACHING)		6
- 5	AN3-4A	••BOLT - (TO PLUG REDUNDANT HOLE)	431-	1
	AN970-3	••WASHER -	431-	2
	AN365-1032	••NUT -	431-	1
	13A-32021	•FRAME ASSY - FUSELAGE STA 190 TOP		1
- 6	13A-32021-3	••WEB - FUSELAGE STA 190 TOP		1
- 7	13A-32159-1	••FITTING - FUS STA 190 FRAME TO LONGERON ATTACHING UPPER PORT SIDE		1
	13A-32159-2	••FITTING - FUS STA 190 FRAME TO LONGERON ATTACHING UPPER STARBOARD SIDE		1
- 8	13A-32021-15	••ANGLE - FUSELAGE STA 190 TOP PORT SIDE		1
	13A-32021-16	••ANGLE - FUSELAGE STA 190 TOP STBD SIDE		1
- 9	AN4-6A	••BOLT - (ANGLE TO FRAME ATTACHING) (PORT)		2
	AN960PD416	••WASHER -		2
	AN365-428	••NUT -		2
-10	AN3-6A	••BOLT - (ANGLE TO FRAME ATTACHING) (PORT)		1
	AN960PD10	••WASHER -		1
	AN365-1032	••NUT -		1
-11	AN4-6A	••BOLT - (ANGLE TO FRAME ATTACHING) (STBD)		1
-12	AN509-416R15	••SCREW - (ANGLE TO FRAME ATTACHING) (STBD)		1
	AN960PD416	••WASHER -		2
	AN365-428	••NUT -		2
-13	AN509-10R12	••SCREW - (ANGLE TO FRAME ATTACHING) (STBD)		1
	AN960PD10	••WASHER -		1
	AN365-1032	••NUT -		1
-14	13A-96075	••SUPPORT ASSY - TOW TARGET RELEASE FUSELAGE STA 190 (PORT SIDE)	001-430	1
-15	S-1193	••FAIRLEAD - CABLE (CAN) (FUSELAGE STA 190)		2
-16	172-52036	••FAIRLEAD - SURFACE CTL CABLE FUS STA 190		2
-17	13A-32085-1	•ANGLE - FUSELAGE STA 190 FRAME TO STRINGER OUTBD BOLTING PORT SIDE		1
	13A-32085-2	•ANGLE - FUSELAGE STA 190 FRAME TO STRINGER OUTBD BOLTING STARBOARD SIDE		1
-18	13A-32095-1	•ANGLE - FUSELAGE STA 190 FRAME TO STRINGER INBOARD BOLTING PORT SIDE		1
	13A-32095-2	•ANGLE - FUSELAGE STA 190 FRAME TO STRINGER INBOARD BOLTING STARBOARD SIDE		1
-19	AN4-7A	•BOLT - (ANGLE TO FRAME ATTACHING)		8
	NAS144-18	•BOLT - (ANGLE TO ANGLE ATTACHING)		2
	AN960-416	•WASHER -		8
	NAS143-4	•WASHER -		2
	NAS143-4C	•WASHER -		2
	AN365-428	•NUT -		10
	13A-32022	•FRAME ASSY - FUSELAGE STA 205 TOP		1
-20	13A-32022-5	••FRAME - FUSELAGE STA 205 TOP FORWARD		1
	13A-32022-3	••FRAME - FUSELAGE STA 205 TOP REAR		1
	13A-32022-7	••CHANNEL - FUSELAGE STA 205 TOP		1
-21	13A-32096-1	••FITTING - FUS STA 205 UPPER FWD FRAME TO LONGERON ATTACHING PORT SIDE		1
	13A-32096-2	••FITTING - FUS STA 205 UPPER FWD FRAME TO LONGERON ATTACHING STARBOARD SIDE		1
-22	13A-32097-1	••FITTING - FUS STA 205 UP. REAR FRAME TO LONGERON ATTACHING PORT SIDE		1

FIGURE AND INDEX NUMBER	GROUP FUSELAGE MAJOR ASSEMBLY FUSELAGE STA 178-236 UPPER FRAME PART NUMBER	1234567 NOMENCLATURE	CODE	UNITS PER ASSY
60 -	13A-32097-2	••FITTING - FUS STA 205 UP. REAR FRAME TO LONGERON ATTACHING STARBOARD SIDE		1
-23	13A-32022-13	••ANGLE - FUSELAGE STA 205 TOP PORT SIDE		1
	13A-32022-14	••ANGLE - FUSELAGE STA 205 TOP STBD SIDE		1
-24	AN4-7A	••BOLT - (ANGLE TO FRAME ATTACHING)		6
	AN960PD416	••WASHER -		6
	AN365-428	••NUT -		6
	13A-32022-9	••STRIP - FUSELAGE STA 205 TOP		1
-25	NAS220-8	••SCREW -		2
	AN960PD8	••WASHER -		2
	AN365-832	••NUT -		2
-26	2F5-2	••FAIRLEAD - (NAA) (PORT)		3
	2C38-1	••CLIP - (NAA) (AS PER EO 05-5E-6A/19)		1
	13A-32102-1	•SUPPORT ASSY - FUSELAGE STA 190-205 UPPER ENGINE TRUNNION PORT SIDE		1
	13A-32102-2	•SUPPORT ASSY - FUSELAGE STA 190-205 UPPER ENGINE TRUNNION STARBOARD SIDE		1
-27	13A-32102-3	••ANGLE - ENGINE TRUNNION SUPPORT UP. PORT		1
	13A-32102-4	••ANGLE - ENGINE TRUNNION SUPPORT UP. STBD		1
-28	13A-32102-5	••ANGLE - ENGINE TRUNNION SUPPORT LWR PORT		1
	13A-32102-6	••ANGLE - ENGINE TRUNNION SUPPORT LWR STBD		1
-29	13A-32102-7	••PLATE - ENGINE TRUNNION SUPPORT		1
-30	AN4-6	••BOLT - (ANGLE TO PLATE ATTACHING)		10
	AN960PD416L	••WASHER -		10
	AN363-428	••NUT -		10
	AN5-6	••BOLT - (ANGLE TO PLATE ATTACHING)		2
	AN960PD516L	••WASHER -		2
	AN363-524	••NUT -		2
-31	AN5-7A	•BOLT - (ANGLE TO PLATE ATTACHING)		4
	AN960-516	•WASHER -		4
	AN365-524	•NUT -		4
	AN4-5A	•BOLT - (ANGLE ATTACHING)		2
	AN960-10	•WASHER -		2
	AN365-1032	•NUT -		2
-32	AN4-7A	•BOLT - (ANGLE TO PLATE ATTACHING)		4
	AN3-5A	•BOLT - (ANGLE TO PLATE ATTACHING)		2
	AN960-416	•WASHER -		6
	AN365-428	•NUT -		6
	13A-32023	•FRAME ASSY - FUSELAGE STA 215 TOP		1
-33	13A-32023-3	••FRAME - FUSELAGE STA 215 TOP		1
-34	140-54047-5	••BRACKET - FIRE-DETECTOR FUSELAGE STA 215		1
	S5-300	••SPRING - FASTENER (DFC)		1
-35	13A-32094	•CLIP - FUSELAGE STA 215 UPPER FWD FRAME TO UPPER LONGERON PORT SIDE		1
	13A-32024	•FRAME ASSY - FUSELAGE STA 226 TOP	001-370	1
	13A-32024-800	•FRAME ASSY - FUSELAGE STA 226 TOP	371-	1
-36	13A-32096-1	••FITTING - FUS STA 225 FRAME TO LONGN ATT UPPER FORWARD PORT SIDE		1
	13A-32096-2	••FITTING - FUS STA 225 FRAME TO LONGN ATT UPPER FORWARD STARBOARD SIDE		1
	13A-32097-1	••FITTING - FUS STA 225 FRAME TO LONGN ATT UPPER REAR PORT SIDE		1
	13A-32097-2	••FITTING - FUS STA 225 FRAME TO LONGN ATT UPPER REAR STARBOARD SIDE		1
	140-52040	••FAIRLEAD - CONTROL CABLE FUSELAGE STA 236		2
-37	13A-96076	••FAIRLEAD - TOW TARGET & CONTROL CABLE		1
	13A-32069	•STIFFENER ASSY - FUSELAGE STA 167-215 UPPER SKIN PORT SIDE		1
-38	13A-32069-3	••ANGLE - FUSELAGE STA 167-215		1
	13A-32068	•STIFFENER ASSY - FUS STA 167-236 CANTED UPPER SKIN STARBOARD SIDE		1

FIGURE AND INDEX NUMBER	GROUP FUSELAGE MAJOR ASSEMBLY FUSELAGE STA 178-236 UPPER FRAME PART NUMBER	1234567 NOMENCLATURE	CODE	UNITS PER ASSY
60 -39	13A-32068-3	••ANGLE - FUSELAGE STA 167-236		1
	13A-32098	•STIFFENER ASSY - FUSELAGE STA 205-236 CANTED PORT SIDE		1
-40	13A-32098-3	••STRINGER - FUSELAGE STA 205-236 CANTED		1
-41	13A-32033	•INTERCOSTAL - FUSELAGE STA 205-226 TOP STARBOARD SIDE		1
	13A-32002-69	•STIFFENER - FUSELAGE STA 205-208 TOP		1
-42	13A-71117	•BRACKET - NORMAL FLIGHT CONTROL HYDRAULIC REAR DISCONNECT		2
-43	AN3-6A	•BOLT - (BRACKET TO FRAME ATTACHING)		2
	AN960-10	•WASHER -		2
	AN365-1032	•NUT -		1
-44	13A-71148-7	•BRACKET - DIVE BRAKE LINE HYDRAULIC REAR DISCONNECT		1
-45	13A-71148-5	•BRACKET - DIVE BRAKE LINE HYDRAULIC REAR DISCONNECT		4
	AN3-5A	•BOLT - (BRACKET ATTACHING)		4
	AN960-10	•WASHER -		4
	AN365-1032	•NUT -		1
-46	13B-71012	•BRACKET - ALTR FLIGHT CTL HYDRAULIC REAR DISCONNECT (AS PER EO 05-5E-6A/78)	001-100	1
-47	172-53362-10	•DUCT ASSY - HEAT & VENT SYSTEM PRIMARY EXCHANGER COOLING AIR OVERBOARD	101-	1
	172-53362-20	•DUCT ASSY - HEAT & VENT SYSTEM PRIMARY EXCHANGER COOLING AIR OVERBOARD		1
	172-53364	••SCREEN ASSY - HEAT & VENT SYSTEM PRIMARY EXCHANGER COOLING AIR OVERBOARD	001-133	1
-48	13A-50011	•BRACKET - FUS STA 181-188 TERMINAL STRIP	134-	1
	13A-50011-800	•BRACKET - FUS STA 181-188 TERMINAL STRIP	001-200	1
-49	13A-32002-49	•DOUBLER - FUSELAGE STA 226-236 TOP PORT	201-	1
	13A-32002-149	•DOUBLER - FUSELAGE STA 226-236 TOP PORT	001-200	1
	13A-32002-51	•DOUBLER - FUSELAGE STA 226-236 TOP STBD	201-	1
	13A-32002-151	•DOUBLER - FUSELAGE STA 226-236 TOP STBD		1
-50	13A-32002-3	•SKIN - FUSELAGE STA 178-236 TOP FRAME		12
	S5-300	•SPRING - FASTENER (DFC) (STA 196)		24
	AN960-4	•WASHER - (STA 196)		9
	S5-325	•SPRING - FASTENER (DFC) (STA 206-224)		18
	AN960-4L	•WASHER - (STA 206-224)		REF
-51	13A-32028	BRACKET - ORENDA ENGINE FORWARD SUPPORT (SEE FIG. 56)		REF
-52	13A-32060-1	LONGERON ASSY - FUSELAGE STA 131-232 UPPER PORT (SEE FIG. 62)		

-000-

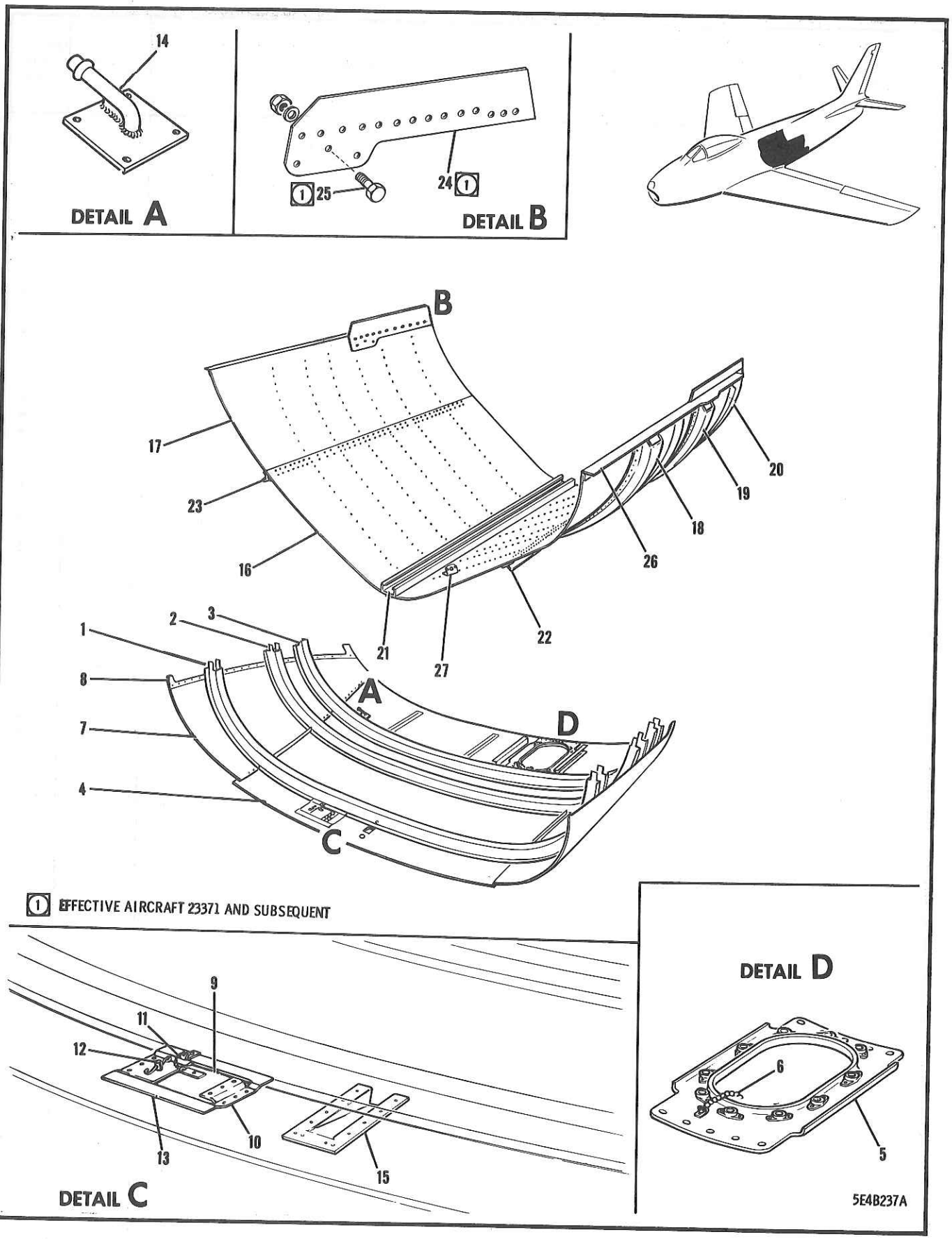

FIGURE 61 FUSELAGE LOWER FRAME & SHROUD

FIGURE AND INDEX NUMBER	GROUP FUSELAGE MAJOR ASSEMBLY FUSELAGE LOWER FRAME & SHROUD PART NUMBER	1234567 NOMENCLATURE	CODE	UNITS PER ASSY
61 -	13A-32006	FRAME ASSY - FUSELAGE STA 207-242 BOTTOM (SEE FIG. 56)		1
- 1	151-31251	•FRAME ASSY - FUSELAGE STA 215 BOTTOM		1
- 2	151-31256	•FRAME ASSY - FUSELAGE STA 226 BOTTOM		1
	AN509-10R9	•SCREW -		1
- 3	13A-32051	•FRAME ASSY - FUSELAGE STA 231 BOTTOM		1
	13A-32006-31	•SKIN ASSY - FUSELAGE STA 207-242 BOTTOM		1
- 4	13A-32006-7	••SKIN - FUSELAGE STA 207-242 BOTTOM		1
	13A-64084-11	••DOUBLER ASSY - REAR FUS FUEL CELL BOOSTER PUMP ACCESS		1
- 5	13A-64084-5	•••DOUBLER - (REAR BOOSTER PUMP ACCESS)		1
- 6	9C1-3-4	•••SAFETY-CHAIN - (NAA)		1
	13A-32006-34	•SKIN ASSY - FUS STA 207-242 BOTTOM STBD		1
	13A-32006-33	•SKIN ASSY - FUS STA 207-242 BOTTOM PORT		1
- 7	13A-32006-4	••SKIN - FUSELAGE STA 207-242 BOTTOM STBD		1
	13A-32006-3	••SKIN - FUSELAGE STA 207-242 BOTTOM PORT		1
- 8	13A-32006-36	••DOUBLER - FUS STA 207-242 BOTTOM STBD		1
	13A-32006-35	••DOUBLER - FUS STA 207-242 BOTTOM PORT		1
	151-48079	•DOOR ASSY - FUS REAR FUEL CELL SUMP DRAIN		1
	151-48079-13	••DOOR ASSY - (REAR FUEL CELL SUMP DRAIN)		1
- 9	151-48079-5	•••DOOR - (REAR FUEL CELL SUMP DRAIN)		1
-10	151-48079-7	•••BRACKET - (REAR FUEL CELL SUMP DRAIN)		1
	2C28	•••CLIP - BALL CHAIN ATTACHING (NAA)	001-300	1
	AN960-2L	•••WASHER -	301-	1
-11	9C1-1-5	•••CHAIN - BEAD (NAA)	001-300	1
	9C1-2-5	•••SAFETY-CHAIN - (NAA)	301-	1
	GF5-175	•••GROMMET - FASTENER (DFC)		1
-12	FA5-35	••FASTENER - FLUSH HEAD (DFC)		1
-13	151-48079-11	••DOUBLER ASSY - FUSELAGE REAR FUEL CELL SUMP DRAIN DOOR		1
	151-48079-3	•••DOUBLER - FUSELAGE REAR FUEL CELL SUMP DRAIN DOOR		1
	2C28	•••CLIP - BALL CHAIN ATTACHING (NAA)	001-300	1
	AN960-2L	•••WASHER -	301-	1
	S5-300	•••SPRING - FASTENER (DFC)		1
-14	151-48058	•NIPPLE ASSY - FUS REAR FUEL CELL SCUPPER CUP DRAIN LINE (STARBOARD SIDE)		1
-15	151-31701	•SCUPPER - FUSELAGE STA 213 FUEL CELL VENT		1
	13A-32007	SHROUD ASSY - FUSELAGE STA 204-236 (SEE FIG. 56)	001-370	1
	13A-32007-60	SHROUD ASSY - FUSELAGE STA 204-236	371-	1
-16	13A-32007-7	•SKIN - FUSELAGE STA 204-236 SHROUD(CENTRE)		1
-17	13A-32007-5	•SKIN - FUS STA 204-236 SHROUD STARBOARD		1
	13A-32007-3	•SKIN - FUS STA 204-236 SHROUD PORT		1
-18	13A-32007-9	•HAT - FUSELAGE STA 215 SHROUD (MAKE FROM 13A-3210556100)		1
-19	13A-32007-11	•HAT - FUSELAGE STA 226 SHROUD (MAKE FROM 13A-3210556100)		2
	13A-32007-37	•ANGLE - FUSELAGE STA 233 SHROUD (LOWER)		1
-20	13A-32007-35	•ANGLE - FUSELAGE STA 233 SHROUD PORT	001-662	1
	13A-32007-45	•ANGLE - FUSELAGE STA 233 SHROUD STARBOARD	663-	1
	13A-32007-39	•ANGLE - FUSELAGE STA 233 SHROUD PORT	001-662	1
	13A-32007-47	•ANGLE - FUSELAGE STA 233 SHROUD STARBOARD	663-	1
-21	13A-32007-21	•CHANNEL - FUSELAGE STA 204-236 SHROUD (MAKE FROM 13A-32091-3318)		1
-22	13A-32007-13	•TEE - FUSELAGE STA 204-236 SHROUD (PORT) (MAKE FROM S-2904-T-03208 (CAN))		1
-23	13A-32007-15	•TEE - FUSELAGE STA 204-236 SHROUD (STBD) (MAKE FROM S-2904-T-03208 (CAN))		1
-24	13A-32007-51	•PLATE - FUSELAGE STA 223-236 SHROUD STBD	371-	1

FIGURE AND INDEX NUMBER	GROUP FUSELAGE MAJOR ASSEMBLY FUSELAGE LOWER FRAME & SHROUD PART NUMBER	1234567 NOMENCLATURE	CODE	UNITS PER ASSY
61 -	13A-32007-49	•PLATE - FUSELAGE STA 223-236 SHROUD PORT	371-	1
-25	AN3-5A	•BOLT - (PLATE TO SHROUD ATTACHING)	371-	2
	AN960-10	•WASHER -	371-	2
	AN365-1032	•NUT -	371-	2
-26	13A-32007-17	•ANGLE - FUSELAGE STA 204-236 SHROUD PORT		1
	13A-32007-19	•ANGLE - FUSELAGE STA 204-236 SHROUD STBD		1
-27	13A-50004	•BRACKET - FIRE-DETECTOR		1
		-000-		

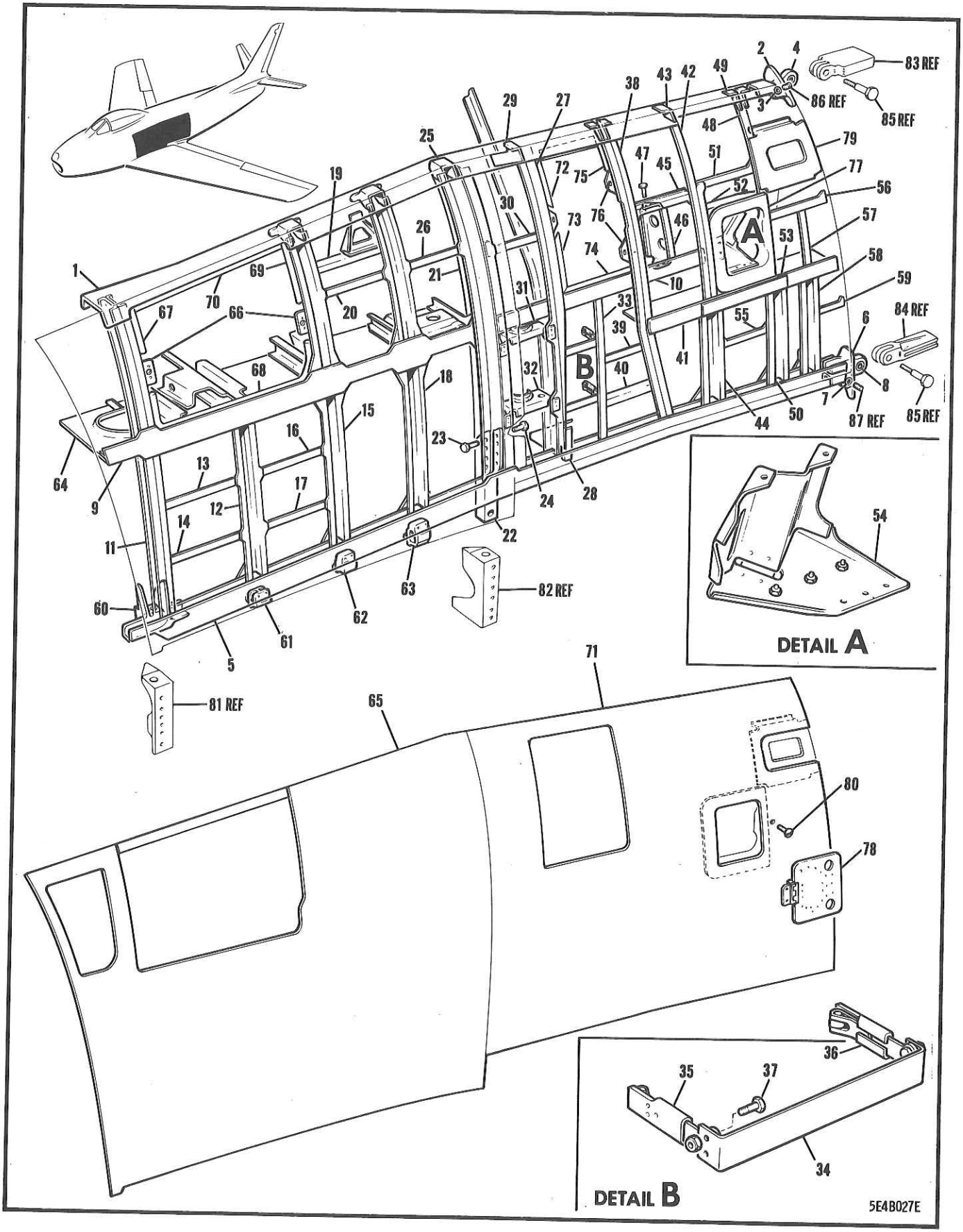

FIGURE 62 FUSELAGE STA 131-236 FRAME PORT SIDE

FIGURE AND INDEX NUMBER	GROUP FUSELAGE MAJOR ASSEMBLY FUSELAGE STA 131-236 FRAME PORT SIDE PART NUMBER	1234567 NOMENCLATURE	CODE	UNITS PER ASSY
62 -	13A-32003	FRAME ASSY - FUSELAGE STA 131-236 PORT SIDE (SEE FIG. 56)	001-100	1
	13A-32003-10	FRAME ASSY - FUSELAGE STA 131-236 PORT SIDE	101-210	1
	13A-32003-100	FRAME ASSY - FUSELAGE STA 131-236 PORT SIDE	211-370	1
	13A-32003-200	FRAME ASSY - FUSELAGE STA 131-236 PORT SIDE	371-	1
- 1	13A-32060-1	•LONGERON ASSY - FUSELAGE STA 131-232 UPPER PORT SIDE	001-370	1
	13A-32060-801	•LONGERON ASSY - FUSELAGE STA 131-232 UPPER PORT SIDE	371-	1
	13A-32109-1	••FITTING ASSY - FUSELAGE STA 234 UPPER FWD LONGERON PORT SIDE		1
- 2	13A-32109-3	•••FITTING - FUS STA 234 UP. FWD LONGN PORT SIDE (MAKE FROM 152-31285-1)		1
- 3	140-31246	•••BUSHING - FORWARD LONGERON FITTING		1
- 4	151-31358-3	•••BUSHING - REAR TO FWD FUS LONGN FITTING		1
- 5	13A-32061-1	•LONGERON ASSY - FUS STA 133-236 LOWER PORT SIDE		1
- 6	13A-32112-1	••FITTING ASSY - FUSELAGE STA 241 LOWER FWD LONGERON PORT SIDE		1
- 7	140-31246	•••BUSHING - FORWARD LONGERON FITTING		1
- 8	151-31358-3	•••BUSHING - REAR TO FWD FUS LONGN FITTING		1
- 9	151-31212-1	•LONGERON ASSY - FUSELAGE STA 126-178 INTER FORWARD PORT SIDE		1
-10	151-31213-21	•LONGERON ASSY - FUSELAGE STA 178-225 INTER REAR PORT SIDE		1
-11	151-31779-17	•FRAME ASSY - FUSELAGE STA 133 PORT SIDE		1
-12	151-31225-10	•FRAME ASSY - FUSELAGE STA 145 PORT SIDE		1
-13	151-31777-3	•STIFFENER - FUSELAGE CTR/SECT SIDE PANEL STA 133-144 UPPER PORT SIDE		1
-14	151-31777-5	•STIFFENER - FUSELAGE CTR/SECT SIDE PANEL STA 133-144 LOWER PORT SIDE		1
-15	151-31227-10	•FRAME ASSY - FUSELAGE STA 156 PORT SIDE		1
	AN4-5A	•BOLT - (FRAME ATTACHING)		4
	AN960D416	•WASHER -		4
	AN365-428	•NUT -		4
	AN509-10R10	•SCREW - (FRAME ATTACHING)		2
	AN960D10	•WASHER -		2
	AN365-1032	•NUT -		2
-16	151-31777-7	•STIFFENER - FUSELAGE CTR/SECT SIDE PANEL STA 144-155 UPPER PORT SIDE		1
-17	151-31777-9	•STIFFENER - FUSELAGE CTR/SECT SIDE PANEL STA 144-155 LOWER PORT SIDE		1
-18	151-31229-10	•FRAME ASSY - FUSELAGE STA 167 PORT SIDE		1
	AN509-10R12	•SCREW - (FRAME ATTACHING)		2
	AN960D10	•WASHER -		2
	AN365-1032	•NUT -		2
-19	151-71071	•SUPPORT ASSY - APX IMPACT SWITCH		1
-20	151-31777-17	•STIFFENER - FUSELAGE CTR/SECT SIDE PANEL STA 155-166 UPPER PORT SIDE		1
-21	13A-32063	•BULKHEAD ASSY - FUSELAGE STA 178 PORT SIDE	001-030	1
	13A-32063-10	•BULKHEAD ASSY - FUSELAGE STA 178 PORT SIDE	031-	1
-22	151-31690-3	••FITTING - FUSELAGE STA 178-180 WING REAR ATTACHING PORT SIDE		1
-23	AN5-7A	••BOLT - (FITTING TO BULKHEAD ATTACHING)		4
-24	AN5-10A	••BOLT - (FITTING TO BULKHEAD ATTACHING)		4
	AN960-516	••WASHER -		8
	AN365-524	••NUT -		8
	AN4-6A	••BOLT - (FITTING ATTACHING)		16
	AN960-416	••WASHER -		16
	AN365-428	••NUT -		16

FIGURE AND INDEX NUMBER	GROUP FUSELAGE MAJOR ASSEMBLY FUSELAGE STA 131-236 FRAME PORT SIDE PART NUMBER	1234567 NOMENCLATURE	CODE	UNITS PER ASSY
62 -25	151-31773-1	••FITTING - FUSELAGE STA 178-180 UPPER LONGERON ATT PORT SIDE		1
	AN5-12A	•BOLT - (FITTING ATTACHING)		2
	AN960D10	•WASHER -		2
	AN365-428	•NUT -		2
-26	151-31777-19	•STIFFENER - FUSELAGE CTR/SECT SIDE PANEL STA 166-178 UPPER PORT SIDE		1
-27	13A-32065	•FRAME ASSY - FUSELAGE STA 190 PORT SIDE		1
-28	13A-32162-1	••BRACKET - FUSELAGE STA 190 FRAME TO LONGN ATTACHING PORT SIDE		1
-29	13A-32169-1	•FITTING - FUSELAGE STA 190 FRAME TO LONGN ATTACHING LOWER PORT SIDE		1
-30	172-31285-1	•STIFFENER ASSY - FUSELAGE STA 180-190 UP.		1
-31	170-58154	•BRACKET ASSY - HYDRAULIC PWR/CTL ACCUM FUS STA 184 UPPER SUP.		1
-32	170-58155	•BRACKET ASSY - HYDRAULIC PWR/CTL ACCUM FUS STA 180 LOWER SUP.		1
-33	13A-32163-1	•STIFFENER ASSY - FUS STA 197 PORT SIDE		1
-34	151-48162	•STRIP ASSY - FUEL FILTER ALCOHOL DE-ICING TANK BACKING	001-210	2
-35	151-48158-1	•STRAP ASSY - FUEL FILTER ALCOHOL DE-ICING TANK SUPPORT LH	001-210	2
	NAS25-3KL	••TRUNNION -	001-210	1
-36	151-48158-2	•STRAP ASSY - FUEL FILTER ALCOHOL DE-ICING TANK SUPPORT RH	001-210	2
	NAS25-3KR	••TRUNNION -	001-210	1
-37	AN3-4A	•BOLT - (STRIP TO STRAP ATTACHING)	001-210	8
	AN365-1032	•NUT -	001-210	8
-38	13A-32040	•FRAME ASSY - FUSELAGE STA 204 PORT SIDE	001-210	1
	13A-32040-100	•FRAME ASSY - FUSELAGE STA 204 PORT SIDE	211-	1
	13A-64022	••BRACKET - DE-ICING SYSTEM		1
	AN3-4A	•BOLT - (BRACKET ATTACHING)		4
	AN365-1032	•NUT -		4
	151-31766-3	•CLIP ASSY - FUSELAGE STA 204 CANTED FRAME TO LONGERON ATTACHING FWD PORT SIDE		1
	151-31767-1	•CLIP ASSY - FUSELAGE STA 204 CANTED FRAME TO LONGERON ATTACHING REAR PORT SIDE		1
	AN3-10A	•BOLT - (CLIP ATTACHING)		1
	AN960-10	•WASHER -		1
	AN365-1032	•NUT -		1
-39	13A-32080-1	•STIFFENER - FUS STA 197-204 LWR PORT SIDE		1
	172-31257	•CLIP - FUSELAGE STA 197 STIFFENER TO FRAME		1
-40	151-31692-11	•STIFFENER - FUSELAGE STA 197-204 PORT SIDE		1
	13A-32003-81	•CLIP - FUSELAGE STA 197 STIFFENER TO FRAME		1
-41	13A-32120-1	•STRINGER - FUSELAGE STA 204-235 INTER		1
-42	13A-32118	•FRAME ASSY - FUSELAGE STA 215 UPPER PORT	001-210	1
	13A-32118-801	•FRAME ASSY - FUSELAGE STA 215 UPPER PORT	211-	1
	13A-74044	••BRACKET ASSY - HEAT & VENT SYSTEM LINE SUPPORT STA I15		1
	AN520-10R8	•SCREW - (BRACKET TO FRAME ATTACHING)		2
-43	13A-32089-1	•FITTING - LOWER REAR FRAME TO LONGERON ATT STA 204 PORT SIDE		1
-44	13A-32115-1	•FRAME ASSY - FUSELAGE STA 215 LOWER PORT		1
	AN3-6A	•BOLT - (FRAME ATTACHING)		2
	AN365-1032	•NUT -		2
-45	13A-32083-1	•STIFFENER - FUSELAGE STA 205-215 UPPER PORT SIDE		1
-46	13A-50008	•PANEL - FUSELAGE STA 210 ELECTRICAL		1
-47	AN3-4A	•BOLT - (PANEL ATTACHING)		2
	AN365-1032	•NUT -		2

FIGURE AND INDEX NUMBER	GROUP FUSELAGE MAJOR ASSEMBLY FUSELAGE STA 131-236 FRAME PORT SIDE PART NUMBER	1234567 NOMENCLATURE	CODE	UNITS PER ASSY
62 -48	13A-32042	•FRAME ASSY - FUSELAGE STA 226 UPPER PORT		1
-49	13A-32088-1	•FITTING - LOWER FWD FRAME TO LONGERON ATT STA 204 & 226 PORT SIDE		2
-50	13A-32119-1	•FRAME ASSY - FUSELAGE STA 226 LOWER PORT		1
	AN3-6A	•BOLT - (FRAME ATTACHING)		4
	AN960-10	•WASHER -		4
	AN365-1032	•NUT -		4
-51	13A-32117-1	•STIFFENER - FUSELAGE STA 215-225 UPPER PORT SIDE		1
-52	13A-32082	•STIFFENER ASSY - FUSELAGE STA 215-225 ACC DOOR PORT SIDE		1
	13A-50014	••COVER ASSY - ELECTRICAL EXT POWER RECP		1
-53	13A-32003-47	•DOUBLER - FUS STA 226 PORT SIDE ACC DOOR		1
-54	13A-50007	•BRACKET ASSY - ELECTRICAL EXT PWR RECP MTG		1
	AN227-4L	••STUD -		4
	AN365-632	••NUT -		4
	AN3-4A	•BOLT - (BRACKET ATTACHING)		6
-55	151-31283-1	•STIFFENER - FUS STA 215-225 LWR PORT SIDE		1
-56	13A-32114	•STIFFENER - FUSELAGE STA 225-236 UPPER		1
-57	13A-64052	•SUPPORT - FUS STA 232 FUEL VENT LINE		1
-58	13A-32116-1	•FRAME ASSY - FUSELAGE STA 231 LOWER PORT		1
-59	13A-32113-1	•STIFFENER - FUSELAGE STA 231-236 LOWER		1
-60	151-31216-1	•FITTING - FUSELAGE STA 131-133 WING FWD ATTACHING PORT SIDE		1
	AN509-10R14	•SCREW - (FITTING ATTACHING)		1
	AN960D10	•WASHER -		1
	AN365-1032	•NUT -		1
-61	140-31216-3	•FITTING - FUSELAGE STA 144 LOWER LONGERON SUPPORT PORT SIDE		2
	AN509-10-16	•SCREW - (FITTING ATTACHING)		2
	AN3-6A	•BOLT - (FITTING ATTACHING)		4
	AN960-10	•WASHER -		4
	AN365-1032	•NUT -		1
-62	151-31235-1	•FITTING - FUSELAGE STA 156 LOWER LONGERON SUPPORT PORT SIDE		2
	NAS205-35	•SCREW - (FITTING ATTACHING)		2
	AN960-10	•WASHER -		2
	AN365-1032	•NUT -		1
-63	140-31218-3	•FITTING - FUSELAGE STA 166 LOWER LONGERON SUPPORT PORT SIDE		2
	NAS206-35	•SCREW - (FITTING ATTACHING)		2
	AN960-416	•WASHER -		2
	AN365-428	•NUT -		1
-64	172-31543	•SHELF ASSY - FUSELAGE STA 126-178 LH	001-100	1
	172-31543-800	•SHELF ASSY - FUS STA 126-178 PORT SIDE	101-	1
	13A-32045-3	•SHELF ASSY - FUS STA 204-236 PORT SIDE		1
-65	13A-32003-73	•SKIN - FUSELAGE STA 131-180 FWD PORT SIDE		1
-66	13A-32003-71	•PLATE - RADIO-BAY DOOR RECEPTACLE MOUNTING (FUS STA 133 & 155 PORT SIDE)		1
-67	13A-32003-61	•SEAL - RADIO-BAY DOOR LH FUS STA 133 PORT SIDE		1
	13A-32003-59	•SUPPORT - RADIO-BAY DOOR LH SEAL (FUS STA 134 PORT SIDE)		1
	13A-32003-63	•STRIP - DOOR LH SEAL RETAINING (FUSELAGE STA 134 PORT SIDE)		1
-68	13A-32003-21	•SEAL - RADIO-BAY DOOR LOWER (FUSELAGE STA 134-135 PORT SIDE)		1
	13A-32003-17	•SUPPORT - RADIO-BAY DOOR LOWER SEAL (FUS STA 134 PORT SIDE)		1
	13A-32003-23	•SUPPORT - RADIO-BAY DOOR LOWER SEAL (FUS STA 134-135 PORT SIDE)		1

FIGURE AND INDEX NUMBER	GROUP FUSELAGE MAJOR ASSEMBLY FUSELAGE STA 131-236 FRAME PORT SIDE PART NUMBER	1234567 NOMENCLATURE	CODE	UNITS PER ASSY
62 -	13A-32003-25	•SUPPORT - RADIO-BAY DOOR LOWER SEAL (FUS STA 154 PORT SIDE)		1
	13A-32003-27	•STRIP - DOOR LOWER SEAL LH RETAINING (FUS STA 134 PORT SIDE)		1
	13A-32003-29	•STRIP - DOOR LOWER SEAL RH RETAINING (FUS STA 154 PORT SIDE)		1
-69	13A-32003-67	•SEAL - RADIO-BAY DOOR RH (FUS STA 154 PORT SIDE)		1
	13A-32003-65	•SUPPORT - RADIO-BAY DOOR RH SEAL (FUS STA 155 PORT SIDE)		1
	13A-32003-69	•STRIP - DOOR RH SEAL RETAINING (FUS STA 154 PORT SIDE)		1
-70	13A-32003-19	•SUPPORT - RADIO-BAY DOOR UPPER (FUS STA 134-154 PORT SIDE)		1
-71	13A-32003-87	•SKIN - FUS STA 180-235 REAR PORT SIDE		1
-72	13A-32003-51	•SEAL - ENGINE ACC DOOR FORWARD UPPER		1
	13A-32003-53	•SUPPORT - ENGINE ACCESS DOOR FWD UPPER		1
-73	13A-32003-55	•SEAL - ENGINE ACC DOOR FORWARD LOWER		1
	13A-32003-57	•SUPPORT - ENGINE ACCESS DOOR FWD LOWER		1
-74	13A-32003-45	•SEAL - ENGINE ACCESS DOOR LOWER		1
	13A-32003-35	•SUPPORT - ENGINE ACCESS DOOR LOWER		1
-75	13A-32003-33	•SEAL - ENGINE ACCESS DOOR REAR UPPER		1
	13A-32003-49	•SUPPORT - ENGINE ACC DOOR REAR UPPER SEAL		1
	13A-32003-75	•SUPPORT - ENGINE ACCESS DOOR UPPER		1
	151-31790	•PLATE ASSY - FUS STA 190 ACC DOOR ATT		1
	99947-P.130	••RECEPTACLE - AIRLOC FASTENER FLOATING STUD (MKM)		1
-76	151-31798	•PLATE ASSY - FUSELAGE STA 204 ACC DOOR ATT		2
	99947-P.130	••RECEPTACLE - AIRLOC FASTENER FLOATING STUD (MKM)		1
-77	172-31025	•DOUBLER - FUS STA 226 ACCESS DOOR PORT		1
-78	172-54151-11	•DOOR ASSY - ELECTRICAL EXT POWER RECP PORT		1
	172-54152	••HINGE ASSY - ELEC EXT RECEPTACLE DOOR		1
	AN253-2-245	•••HINGE-PIN -		1
	KM680	••LATCH - PUSH-BUTTON (CFC)		1
	172-54154	•CLIP - ELECTRICAL EXT POWER DOOR SPRING RETAINER PORT WING		2
	151-54292	•SPRING - ELECTRICAL EXT PWR RECP DOOR PORT SIDE		1
	AN393-39	•PIN -		1
	AN380-2-2	•COTTER-PIN -		1
-79	13A-32084	•DOUBLER ASSY - ORENDA FITTING STA 190 ACCESS DOOR PORT SIDE		1
-80	AN509-8-8	•SCREW -		1
	AN960C8	•WASHER -		1
	AN365-832	•NUT -		1
-81	152-13027-3	FITTING - WING CTR/SECT FWD SPAR TO FUS ATT PORT SIDE (SEE SECTION 1)		REF
-82	152-13028-7	FITTING - WING CTR/SECT REAR SPAR TO FUS ATT PORT SIDE (SEE SECTION 1)		REF
-83	152-31379-11	FITTING - UPPER REAR LONGERON FORWARD PORT (SEE FIG. 74)		REF
-84	151-31593-11	FITTING - FUSELAGE STA 241 REAR LOWER LONGERON PORT (SEE FIG. 74)		REF
-85	140-31024	BOLT - FUSELAGE ATT STA 236 (SEE FIG. 32)		REF
-86	151-31788-801	PLUG - FUS CANTED STA 235 UPPER LONGN FTG (SEE FIG. 32)		REF
-87	151-31787	PLUG - FUS CANTED STA 235 LWR FWD LONGN FTG (SEE FIG. 32)		REF

-000-

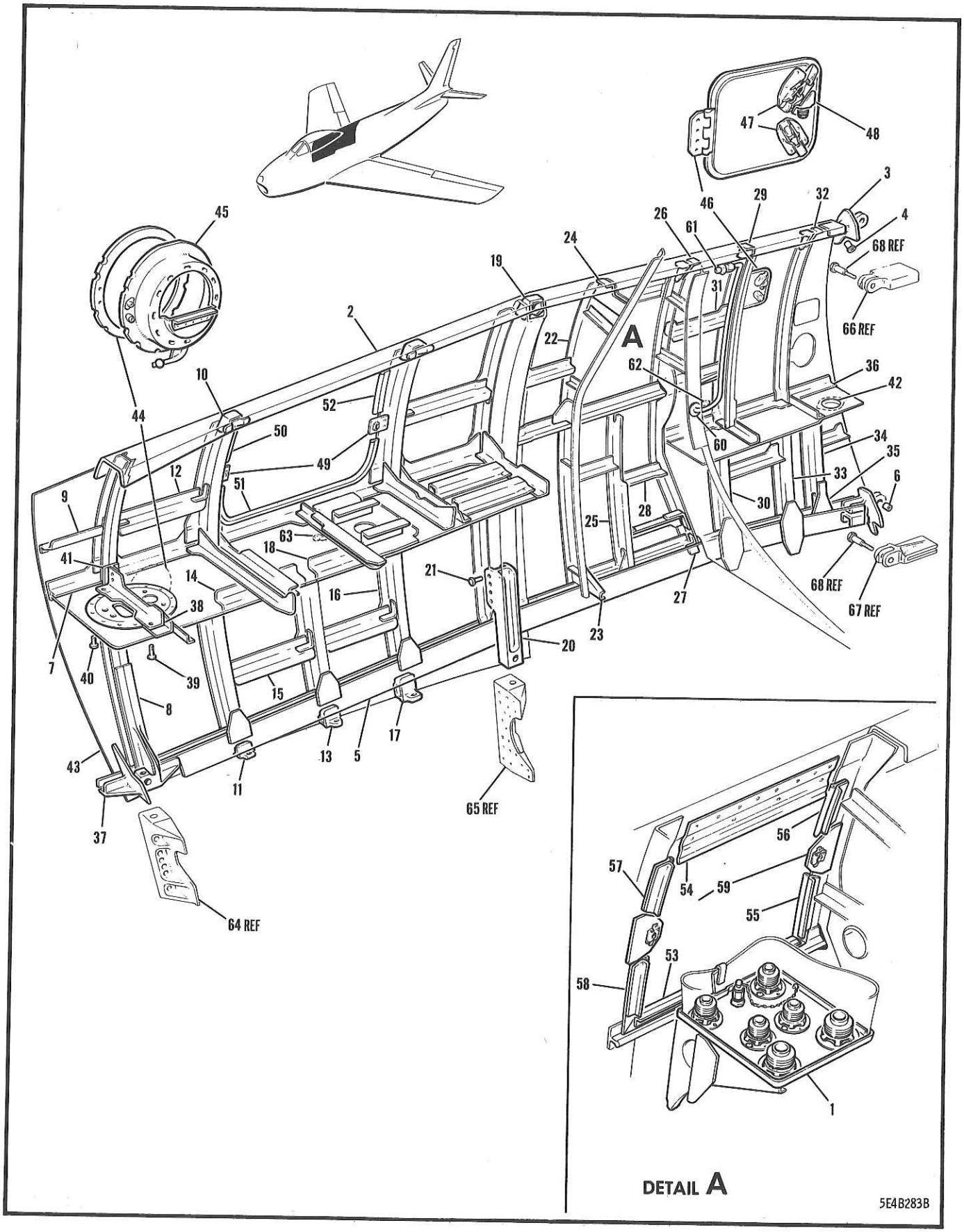

FIGURE 63 FUSELAGE STA 131-236 FRAME STARBOARD SIDE

FIGURE AND INDEX NUMBER	GROUP FUSELAGE MAJOR ASSEMBLY FUSELAGE STA 131-236 FRAME STARBOARD SIDE PART NUMBER	1234567 NOMENCLATURE	CODE	UNITS PER ASSY
63 -	13A-32004	FRAME ASSY - FUSELAGE STA 131-236 STBD SIDE (SEE FIG. 56)	001-100	1
	13A-32004-100	FRAME ASSY - FUSELAGE STA 131-236 STBD SIDE	101-370	1
	13A-32004-800	FRAME ASSY - FUSELAGE STA 131-236 STBD SIDE	371-	1
- 1	13A-71209	•DISCONNECT ASSY - ENGINE TO GROUND HYD (SEE FIG. 64)		REF
- 2	13A-32060-2	•LONGERON ASSY - FUS STA 131-232 UPPER STBD	001-370	1
	13A-32060-802	•LONGERON ASSY - FUS STA 131-232 UPPER STBD	371-	1
	13A-32109-2	••FITTING ASSY - FUSELAGE STA 234 UPPER FWD LONGERON STARBOARD SIDE		1
	13A-32109-4	•••FITTING - UPPER FORWARD LONGERON (FUS STA 234 STARBOARD)		1
- 3	13A-32179	•••BUSHING - FORWARD LONGERON FITTING		1
	151-31358-3	•••BUSHING - REAR TO FWD FUS LONGN FITTING		1
- 4	13A-32061-2	•LONGERON ASSY - FUS STA 133-238 LOWER STBD		1
	13A-32112-2	••FITTING ASSY - FUSELAGE STA 241 LOWER FWD LONGERON STARBOARD SIDE		1
- 5	13A-32112-4	•••FITTING - LOWER FORWARD LONGERON (FUS STA 241 STARBOARD SIDE)		1
	140-31246	•••BUSHING - REAR TO FWD FUS LONGN FITTING		1
- 6	151-31358-3	•••BUSHING - REAR TO FWD FUS LONGN FITTING		1
- 7	151-31212-2	•LONGERON ASSY - FUSELAGE STA 126-178 INTER FORWARD STARBOARD SIDE		1
	151-31213-22	•LONGERON ASSY - FUSELAGE STA 178-225 INTER REAR STARBOARD SIDE		1
- 8	151-31780	•FRAME ASSY - FUSELAGE STA 133 STBD SIDE		1
	AN509-10R12	•SCREW -		2
	AN960D10	•WASHER -		2
	AN365-1032	•NUT -		2
- 9	151-31785	•STIFFENER - FUS STA 133 TO CANTED STA 126		1
	151-31226-20	•FRAME ASSY - FUSELAGE STA 145 STBD SIDE		1
-10	151-31268	•CLIP ASSY - FUS STA 144 UP. LONGN ATT LWR		1
-11	140-31216-4	•FITTING - FUSELAGE STA 144 LOWER LONGERON SUPPORT STARBOARD SIDE		1
	AN509-10-14	•SCREW - (FITTING ATTACHING)		2
	AN3-6	•BOLT - (FITTING ATTACHING)		2
	AN960-10	•WASHER -		4
	AN365-1032	•NUT -		4
-12	151-31777-24	•STIFFENER - FUSELAGE CTR/SECT SIDE PANEL STA 133-144 STARBOARD SIDE		1
	151-31228-10	•FRAME ASSY - FUSELAGE STA 156 STBD SIDE		1
-13	151-31235-2	•FITTING - FUSELAGE STA 156 LOWER LONGERON SUPPORT STARBOARD SIDE		1
	NAS205-35	•SCREW - (FITTING ATTACHING)		2
	AN960-10	•WASHER -		2
	AN365-1032	•NUT -		2
-14	151-31777-8	•STIFFENER - FUSELAGE CTR/SECT SIDE PANEL STA 144-155 STARBOARD SIDE		1
-15	151-31777-10	•STIFFENER - FUSELAGE CTR/SECT SIDE PANEL STA 144-155 STARBOARD SIDE		1
	151-31763-2	•CLIP - FUSELAGE FRAME TO LWR LONGN ATT STA 144 & 155 & 166		3
	151-31764-2	•CLIP - FUSELAGE FRAME TO LWR LONGN ATT STA 144 & 155 & 166		3
-16	151-31230-10	•FRAME ASSY - FUSELAGE STA 167 STBD SIDE		1
	151-31270-2	•CLIP ASSY - FUSELAGE STA 167 UPPER LONGN ATTACHING LOWER STARBOARD SIDE		1
-17	140-31218-4	•FITTING - FUSELAGE STA 166 LOWER LONGERON SUPPORT STARBOARD SIDE		1
	NAS206-35	•SCREW - (FITTING ATTACHING)		2

FIGURE AND INDEX NUMBER	GROUP FUSELAGE MAJOR ASSEMBLY FUSELAGE STA 131-236 FRAME STARBOARD SIDE PART NUMBER	1234567 NOMENCLATURE	CODE	UNITS PER ASSY
63 -	AN960-416	•WASHER -		2
	AN365-428	•NUT -		2
-18	151-31777-12	•STIFFENER - FUSELAGE CTR/SECT SIDE PANEL STA 155-166 STARBOARD SIDE		1
	151-31777-14	•STIFFENER - FUSELAGE CTR/SECT SIDE PANEL STA 155-166 RH		1
	13A-32064	•BULKHEAD ASSY - FUSELAGE STA 178 STBD SIDE		1
-19	151-31773-2	••FITTING - FUSELAGE STA 178-180 UP. LONGN ATTACHING STARBOARD SIDE		1
-20	151-31690-4	••FITTING - FUSELAGE STA 178-180 WING REAR ATTACHING STARBOARD SIDE		1
-21	AN5-7A	••BOLT - (FITTING TO BULKHEAD ATTACHING)		4
	AN5-10A	••BOLT - (FITTING TO BULKHEAD ATTACHING)		4
	AN960-516	••WASHER -		8
	AN365-524	••NUT -		8
	AN4-6A	••BOLT - (FITTING TO BULKHEAD ATTACHING)		16
	AN960-416	••WASHER -		16
	AN365-428	••NUT -		16
	AN5-12A	•BOLT - (BULKHEAD ATTACHING)		2
	AN960-516	•WASHER -		2
	AN365-524	•NUT -		2
	191-31777	•STIFFENER - FUSELAGE CTR/SECT SIDE PANEL STA 166-178 UPPER STARBOARD SIDE		1
-22	13A-32066	•FRAME ASSY - FUSELAGE STA 190 STBD SIDE	001-100	1
	13A-32066-100	•FRAME ASSY - FUSELAGE STA 190 STBD SIDE	101-	1
-23	13A-32162-2	••BRACKET - FRAME TO LOWER LONGERON ATT FUS STA 190 STARBOARD SIDE		1
-24	13A-32169-2	•FITTING - FRAME TO UPPER LONGERON LOWER ATTACHING FUS STA 190 STARBOARD SIDE		1
-25	13A-32163-2	•STIFFENER ASSY - FUSELAGE STA 197 STARBOARD SIDE		1
	AN3-10A	•BOLT - (STIFFENER ATTACHING)		2
	AN960-10	•WASHER -		2
	AN365-1032	•NUT -		2
	13A-32041	•FRAME ASSY - FUSELAGE STA 204 STBD SIDE		1
	13A-71202	••SUPPORT ASSY - HYDRAULIC REGULATOR LOWER		1
	172-58145	••NAME-PLATE - CHECK-VALVE INSTL INSTN		1
	13A-32088-2	•FITTING - LOWER FWD FRAME TO LONGERON ATT STA 204 & 226 STARBOARD SIDE		2
-26	13A-32089-2	•FITTING - LOWER REAR FRAME TO LONGERON ATT STA 204 RH		1
	AN3-10A	•BOLT - (FITTING ATTACHING)		2
	AN960-10	•WASHER -		2
	AN365-1032	•NUT -		2
-27	151-31766-4	•CLIP ASSY - FUSELAGE STA 204 CANTED FRAME TO LOWER LONGERON ATT FWD STBD SIDE		1
	151-31767-2	•CLIP - FUSELAGE STA 204 CANTED FRAME TO LOWER LONGERON ATT REAR STBD SIDE		1
-28	13A-32080-2	•STIFFENER - FUSELAGE STA 197-204 LOWER		1
	172-31257	•CLIP - FUSELAGE STA 197 STIFFENER TO FRAME		1
	151-31692-12	•STIFFENER - FUSELAGE STA 197-204 LOWER		1
	13A-32067	•FRAME ASSY - FUSELAGE STA 215 UPPER STBD		1
	151-31298	••CLIP - FUSELAGE FRAME TO STRINGER ATTACHING (FUSELAGE STA 215)		2
-29	13A-32079	•CLIP - FUSELAGE STA 215 LOWER FWD FRAME TO UPPER LONGERON STARBOARD SIDE	001-210	1
	13A-32079-2	•CLIP - FUSELAGE STA 215 LOWER FWD FRAME TO UPPER LONGERON STARBOARD SIDE	211-	1
	AN4-6A	•BOLT - (CLIP ATTACHING)		2
	AN960-416	•WASHER -		2

FIGURE AND INDEX NUMBER	GROUP FUSELAGE MAJOR ASSEMBLY FUSELAGE STA 131-236 FRAME STARBOARD SIDE PART NUMBER	1234567 NOMENCLATURE	CODE	UNITS PER ASSY
63 -	AN365-428	•NUT -		2
-30	13A-32115-2	•FRAME ASSY - FUSELAGE STA 215 LOWER STBD		1
	151-31769-4	•CLIP - FUSELAGE FRAME TO LWR LONGERON ATTACHING (FUSELAGE STA 215)		1
	13A-32004-47	•PLATE - SPLICE (FUS STA 215 LWR STBD SIDE)		1
-31	13A-32083-3	•STIFFENER - FUSELAGE STA 204-215 UP• STBD		1
	13A-32043	•FRAME ASSY - FUSELAGE STA 226 UPPER STBD		1
-32	13A-32129-2	•FITTING - LOWER REAR FRAME TO LONGERON ATTACHING STA 225		1
	13A-32117-2	•STIFFENER - FUSELAGE STA 215-225 UP• STBD		1
-33	13A-32119-2	•FRAME ASSY - FUSELAGE STA 226 LOWER STBD		1
	13A-32004-89	•PLATE - SPLICE (FUS STA 226 LOWER STBD)		1
	151-31769-6	•CLIP - FRAME TO LOWER LONGERON ATTACHING (FUSELAGE STA 226)		2
	151-31770-2	•CLIP - FRAME TO LOWER LONGERON ATTACHING (FUSELAGE STA 215 & 226)		1
	151-31283-2	•STIFFENER - FUSELAGE STA 215-225 LWR STBD		1
-34	13A-32116-2	•FRAME ASSY - FUSELAGE STA 231 LOWER STBD		1
-35	161-31247-2	•PLATE ASSY - FUSELAGE STA 231 LONGERON TO FRAME SPLICE		1
-36	13A-32120-2	•STRINGER - FUSELAGE STA 204-235 INTER		1
	13A-32113-2	•STIFFENER - FUSELAGE STA 231-236 LWR STBD		1
-37	151-31216-2	•FITTING - FUSELAGE STA 131-133 WING FWD ATTACHING STARBOARD SIDE		1
	AN509-10R14	•SCREW - (FITTING ATTACHING)		1
	AN960D10	•WASHER -		1
	AN365-1032	•NUT -		1
	151-31232-60	•SHELF ASSY - FUSELAGE STA 126-178 STBD		1
	151-31232-52	••DOOR - SHELF (FUSELAGE STA 133)		1
-38	151-31232-47	••STIFFENER - DOOR (FUSELAGE STA 133)		1
	151-31232-48	••ANGLE - DOOR STIFFENER (FUSELAGE STA 133)		1
	151-31232-57	••ANGLE - STIFFENER SUPPORT (FUS STA 133)		1
	151-31232-59	••CLIP - DOOR STIFFENER (FUSELAGE STA 133)		1
	NAS222-10	••SCREW -		2
-39	AN4-5A	••BOLT - (DOOR TO SHELF ATTACHING)		2
	AN960-416L	••WASHER -		2
	AN365-428	••NUT -		11
-40	AN3-4A	••BOLT - (DOOR TO SHELF ATTACHING)		3
	AN3-5A	••BOLT - (DOOR TO SHELF ATTACHING)		1
	AN3-6A	••BOLT - (DOOR TO SHELF ATTACHING)		15
	AN960-10L	••WASHER -		15
	AN365-1032	••NUT -		2
	151-31232-37	••SEAL - SHELF (FUSELAGE STA 133)		1
-41	151-31786	•CLIP - FUS FRAME ATT TO DECK STA 135 STBD		10
	AN4-6A	•BOLT - (CLIP ATTACHING)		4
	AN4-5A	•BOLT - (CLIP ATTACHING)		8
	AN960D416	•WASHER -		6
	AN960-416	•WASHER -		14
	AN365-428	•NUT -		1
	13A-32045-5	•SHELF ASSY - FUSELAGE STA 204-236 STBD		1
-42	13A-32155	••RING - SHELF TO FUEL FILLER PACKING		1
	13A-32154	••GASKET - SHELF TO FUEL CELL FILLER PACKING RING		2
	AN3-4A	••BOLT -		2
	AN363-1032	••NUT -		1
	13A-32057	•CLIP - FRAME TO SHELF ATT LWR FUS STA 225		1
	13A-32178	•CLIP - FRAME TO SHELF ATT LWR FUS STA 225		5
	AN3-5A	•BOLT -		1
	AN3-6A	•BOLT -		7
	AN960-10	•WASHER -		

FIGURE AND INDEX NUMBER	GROUP FUSELAGE MAJOR ASSEMBLY FUSELAGE STA 131-236 FRAME STARBOARD SIDE PART NUMBER	1234567 NOMENCLATURE	CODE	UNITS PER ASSY
63 -	AN365-1032	•NUT -		6
-43	13A-32004-3	•SKIN - FUSELAGE STA 131-180 FORWARD STBD		1
	13A-32004-121	•SKIN ASSY - FUSELAGE STA 180-235 FWD STBD		1
-44	151-48065	•GASKET - FUSELAGE FWD FUEL CELL FILLER CUP		1
	151-48063	•DOUBLER - FORWARD FUS FUEL CELL FILLER CUP		1
-45	151-48073-11	•CUP ASSY - FUSELAGE FWD FUEL CELL FILLER	001-661	1
	151-48073-801	•CUP ASSY - FUSELAGE FWD FUEL CELL FILLER	662-	1
	13A-32081	•RING - FUSELAGE STA 217 OIL TANK ACC DOOR		1
	13A-65002	•DOOR ASSY - FUSELAGE STA 217 OIL TANK ACC	001-490	1
	13A-65002-801	•DOOR ASSY - FUSELAGE STA 217 OIL TANK ACC	491-	1
-46	172-47021	••HINGE ASSY - FUSELAGE STA 217 OIL TANK ACCESS DOOR		1
	172-47021-3	•••PLATE - FUS STA 217 OIL TANK ACCESS DOOR (MAKE FROM NAS40-5ALL2500)		1
	172-47021-5	•••PLATE - FUS STA 217 OIL TANK ACCESS DOOR (MAKE FROM NAS40-5ATT2500)		1
	AN253-2-237	•••HINGE-PIN -		1
-47	H5000-125-125	••LATCH ASSY - FLUSH (HAS)		2
-48	191-47009-800	••RETAINER ASSY - OIL TANK DIP-STICK		1
-49	13A-32004-85	•PLATE - RECEPTACLE MTG FUS STA 144 & 166		2
	99947-P.130	•RECEPTACLE - AIRLOC FASTENER FLOATING STUD (MKM)		2
-50	13A-32004-75	•SEAL - RADIO-BAY DOOR FORWARD UPPER		1
	13A-32004-73	•RETAINER - DOOR SEAL FORWARD UPPER		1
	13A-32004-77	•STRIP - DOOR SEAL RTNR (FUS STA 144 STBD)		1
-51	13A-32004-23	•SEAL - RADIO-BAY DOOR LOWER		1
	13A-32004-19	•RETAINER - DOOR LOWER FORWARD		1
	13A-32004-25	•STRIP - DOOR SEAL RTNR (FUS STA 144 STBD)		1
	13A-32004-29	•RETAINER - DOOR LWR (FUS STA 144-166 STBD)		1
	13A-32004-21	•RETAINER - DOOR LOWER REAR		1
	13A-32004-27	•STRIP - DOOR SEAL RTNR (FUS STA 166 STBD)		1
-52	13A-32004-81	•SEAL - RADIO-BAY DOOR UPPER REAR		1
	13A-32004-79	•RETAINER - DOOR UPPER REAR		1
	13A-32004-83	•STRIP - DOOR SEAL RTNR (FUS STA 166 STBD)		1
	13A-32004-17	•RETAINER - RADIO-BAY DOOR UPPER		1
-53	13A-32004-53	•SEAL - ENGINE ACCESS DOOR LOWER		1
	13A-32004-51	•RETAINER - ENGINE ACCESS DOOR SEAL		1
	13A-32004-951	•RETAINER - ENGINE ACCESS DOOR SEAL	001-400	1
-54	13A-32004-87	•RETAINER - ENGINE ACCESS DOOR UPPER	401-	1
-55	13A-32004-61	•SEAL - ENGINE ACCESS DOOR LOWER REAR		1
	13A-32004-63	•RETAINER - ENGINE ACCESS DOOR SEAL		1
-56	13A-32004-57	•SEAL - ENGINE ACCESS DOOR UPPER REAR		1
	13A-32004-59	•RETAINER - ENGINE ACCESS DOOR SEAL		1
-57	13A-32004-65	•SEAL - ENGINE ACCESS DOOR UPPER FORWARD		1
	13A-32004-67	•RETAINER - ENGINE ACCESS DOOR SEAL		1
-58	13A-32004-69	•SEAL - ENGINE ACCESS DOOR LOWER FORWARD		1
	13A-32004-71	•RETAINER - ENGINE ACCESS DOOR SEAL		1
-59	151-31790	•PLATE ASSY - FUSELAGE STA 190 & 204 ACCESS DOOR ATTACHING		1
	99947-P.130	••RECEPTACLE - AIRLOC FASTENER FLOATING STUD (MKM)		2
	13A-32004-117	•DOUBLER - ORENDA FITTING ACCESS DOOR STBD		1
-60	13A-65013	•TUBE ASSY - OIL TANK TO ATMOSPHERE VENT STARBOARD SIDE		1
	AN818-8D	••NUT -		1
	AN819-8D	••SLEEVE -		1
-61	AN919-15D	•REDUCER -		1
	AN742D10C	•CLAMP -		1
	NAS43DD3-16	•SPACER -		1
	AN520-10R14	•SCREW - (CLAMP ATTACHING)		1

FIGURE AND INDEX NUMBER	GROUP FUSELAGE MAJOR ASSEMBLY FUSELAGE STA 131-236 FRAME STARBOARD SIDE PART NUMBER	1234567 NOMENCLATURE	CODE	UNITS PER ASSY
63 -	AN365-1032	•NUT -		1
-62	13A-65012	•BLOCK - OIL TANK TO ATM VENT AIR DEFLECTOR	001-100	1
	176-47011-5	•BLOCK - OIL TANK TO ATM VENT AIR DEFLECTOR	101-	1
-63	2J1	•JACK ASSY - FUEL NOZZLE GROUNDING (NAA)		1
-64	152-13027-4	FITTING - WING CTR/SECT FWD SPAR TO FUS ATT STARBOARD SIDE (SEE SECTION 1)		REF
-65	152-13028-8	FITTING - WING CTR/SECT REAR SPAR TO FUS ATTACHING STBD SIDE (SEE SECTION 1)		REF
-66	152-31379-12	FITTING - UPPER REAR LONGERON FUSELAGE STA 235 STBD SIDE (SEE FIG. 74)		REF
-67	151-31593-12	FITTING - FUSELAGE STA 241 REAR LWR LONGN STARBOARD SIDE (SEE FIG. 74)		REF
-68	140-31024	BOLT - FUSELAGE ATT STA 236 (SEE FIG. 32)		REF
		-000-		

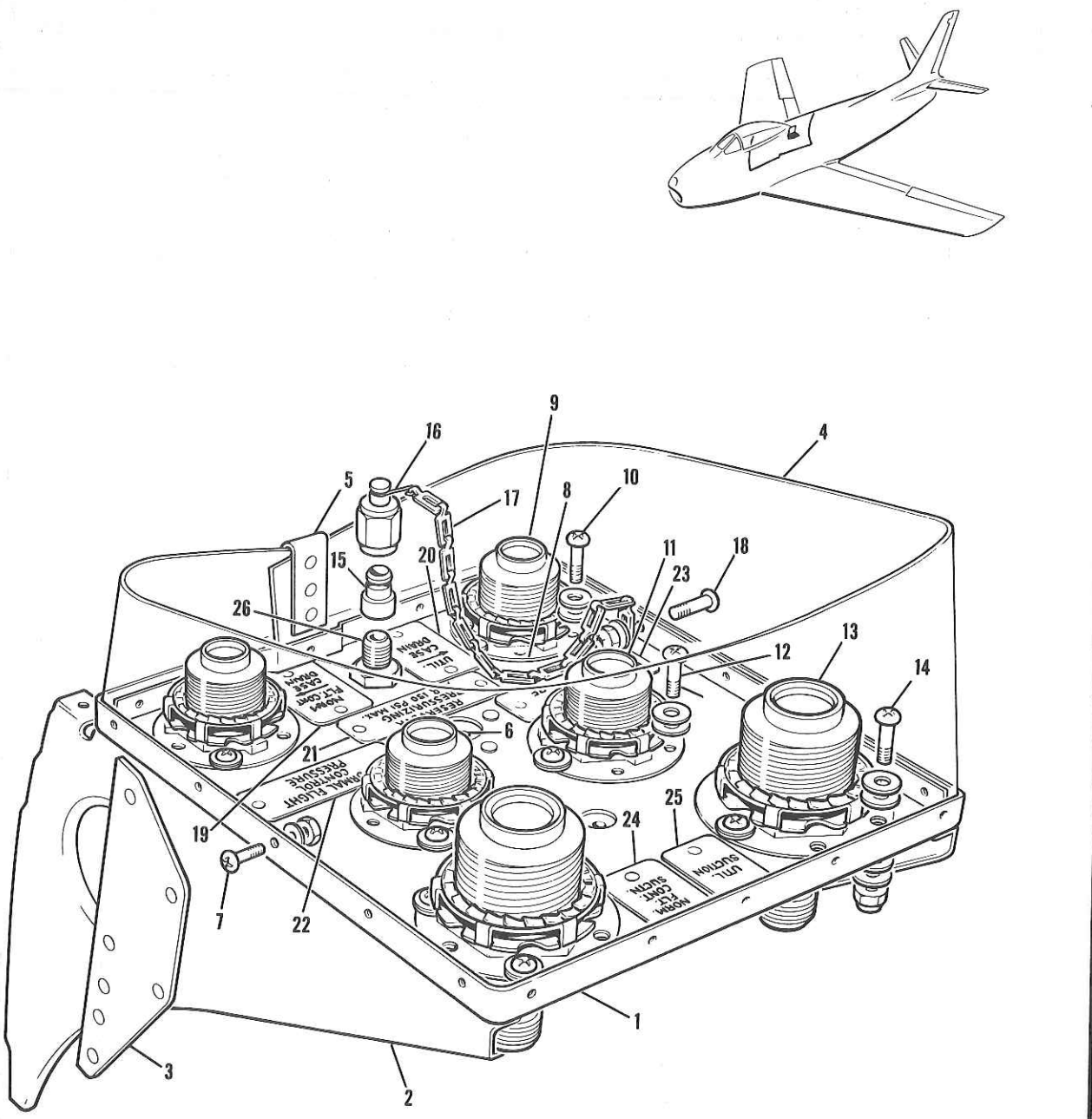

FIGURE 64 ENGINE TO GROUND HYDRAULIC DISCONNECT

FIGURE AND INDEX NUMBER	GROUP FUSELAGE MAJOR ASSEMBLY ENGINE TO GROUND HYDRAULIC DISCONNECT PART NUMBER	1234567 NOMENCLATURE	CODE	UNITS PER ASSY
64 -	13A-71209	DISCONNECT ASSY - ENGINE TO GRD HYDRAULIC (SEE FIG. 63)		1
- 1	13A-71210	•PAN ASSY - ENGINE GROUND HYD DISCONNECT		1
- 2	13A-71211	•SUPPORT - ENGINE GROUND DISCONNECT PAN		1
	13A-71212	•SUPPORT - ENGINE GROUND DISCONNECT PAN		1
- 3	13A-71229	•PLATE - NORMAL SURFACE CTL RSRVR SUPPORT		1
- 4	13A-71209-3	•GUARD - RUBBER ANTI-SPLASH		1
- 5	13A-71209-15	•CLIP - SLIP-OVER GUARD		1
- 6	13A-71209-11	•FITTING - DISCONNECT DRAIN		1
- 7	AN515-8R5	•SCREW - (RUBBER GUARD TO PAN ATTACHING)		18
	AN936A8	•WASHER -		18
	AN340-8	•NUT -		18
- 8	13A-71214	•FLANGE - DISCONNECT PAN SPECIAL		2
- 9	155-S2-6D	•COUPLING HALF - HOSE SELF-SEALING (AQC)	001-370	2
	155-S2-6D	•COUPLING HALF - HOSE SELF-SEALING (AQC) (UTILITY CASE DRAIN)	371-	1
	155-S2-6S	•COUPLING HALF - HOSE SELF-SEALING (AQC) (NORMAL SURFACE CONTROL CASE DRAIN)	371-	1
-10	AN520-10R7	•SCREW - (COUPLING TO PAN ATTACHING)	001-610	6
	AN520-10R10	•SCREW - (COUPLING TO PAN ATTACHING)	611-	6
	AN960-10L	•WASHER -	611-	12
	600-001-10-0S	•STAT-O-SEAL - GENERAL PURPOSE (WFC)	611-	12
	AN365-1032	•NUT -		6
-11	155-S4-8D	•COUPLING HALF - HOSE SELF-SEALING (AQC)		2
-12	AN520-10R7	•SCREW - (COUPLING TO PAN ATTACHING)	001-610	6
	AN520-10R10	•SCREW - (COUPLING TO PAN ATTACHING)	611-	6
	AN960-10L	•WASHER -	611-	12
	600-001-10-0S	•STAT-O-SEAL - GENERAL PURPOSE (WFC)		12
	AN365-1032	•NUT -		6
-13	155-S4-12D	•COUPLING HALF - HOSE SELF-SEALING (AQC)		2
-14	AN520-10R7	•SCREW - (COUPLING TO PAN ATTACHING)	001-610	6
	AN520-10R10	•SCREW - (COUPLING TO PAN ATTACHING)	611-	6
	AN960-10L	•WASHER -	611-	12
	600-001-10-0S	•STAT-O-SEAL - GENERAL PURPOSE (WFC)		12
	AN365-1032	•NUT -		6
	157-58414	•CAP ASSY - HYDRAULIC DISCONNECT PANEL AIR PRESSURIZING		1
	AN818-4D	••NUT -		1
-15	187-58532	••CAP - HYDRAULIC FITTING		1
-16	157-58413	••LINK - HYDRAULIC DISCONNECT PANEL AIR-PRESSURE CAP RETR		1
-17	9C1-3-7	••SAFETY-CHAIN - (NAA)		1
-18	AN520-10R8	•SCREW - (CHAIN TO PAN ATTACHING)		1
	AN365-1032	•NUT -		1
-19	13A-71219-5	•NAME-PLATE - NORMAL SUR CTL CASE DRAIN		1
-20	13A-71219-3	•NAME-PLATE - UTILITY CASE DRAIN		1
-21	13A-71219-15	•NAME-PLATE - RESERVOIR AIR-PRESSURE		1
-22	13A-71219-7	•NAME-PLATE - NORMAL SURFACE CTL PRESSURE		1
-23	13A-71219-9	•NAME-PLATE - UTILITY PRESSURE		1
-24	13A-71219-11	•NAME-PLATE - NORMAL SURFACE CTL SUCTION		1
-25	13A-71219-13	•NAME-PLATE - UTILITY SUCTION		1
-26	AN832-4D	•UNION -	A16	1
	AN901-4C	•GASKET -	A16	1
	AN924-4D	•NUT -		1

-000-

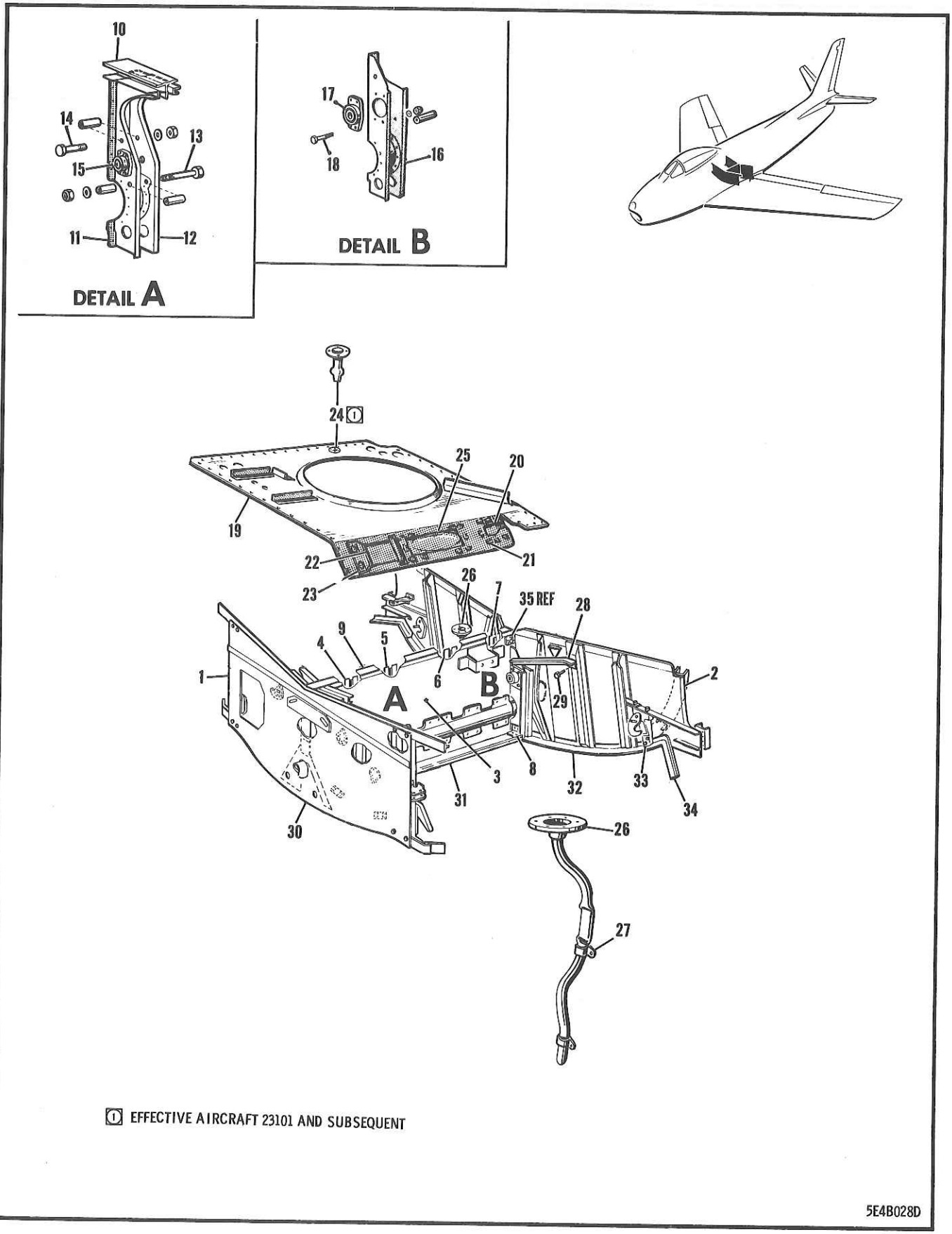

FIGURE 65 FUSELAGE STA 178-205 WHEEL WELL

FIGURE AND INDEX NUMBER	GROUP FUSELAGE MAJOR ASSEMBLY FUSELAGE STA 178-205 WHEEL WELL PART NUMBER	1234567 NOMENCLATURE	CODE	UNITS PER ASSY
65 -	13A-32005	WELL ASSY - FUSELAGE STA 178-205 WHEEL (SEE FIG. 56)	001-100	1
	13A-32005-100	WELL ASSY - FUSELAGE STA 178-205 WHEEL	101-210	1
	13A-32005-101	WELL ASSY - FUSELAGE STA 178-205 WHEEL	211-	1
- 1	151-31220-10	•BULKHEAD ASSY - BOTTOM FUSELAGE STA 178 (SEE FIG. 65A)		REF
- 2	13A-32050	•FRAME ASSY - BOTTOM FUSELAGE STA 205 (SEE FIG. 66)		REF
	13A-32053	•BEAM ASSY - WHEEL WELL FUS STA 178-205		1
- 3	13A-32053-3	••WEB - WHEEL WELL BEAM FUS STA 178-205		1
- 4	13A-32053-7	••HAT - WHEEL WELL BEAM FUSELAGE STA 184		1
- 5	13A-32053-9	••HAT - WHEEL WELL BEAM FUSELAGE STA 189		1
- 6	13A-32053-45	••HAT - WHEEL WELL BEAM FUSELAGE STA 194		1
- 7	13A-32053-11	••HAT - WHEEL WELL BEAM FUSELAGE STA 198		1
	13A-32053-13	••HAT - WHEEL WELL BEAM FUSELAGE STA 202		1
- 8	13A-32053-15	••ANGLE - WHEEL WELL BEAM FUSELAGE STA 178-205 (PORT SIDE)		1
	13A-32053-16	••ANGLE - WHEEL WELL BEAM FUSELAGE STA 178-205 (STARBOARD SIDE)		1
- 9	13A-32053-33	••TEE - WHEEL WELL BEAM FUS STA 181-205		1
	13A-32053-29	••CHANNEL - WHEEL WELL BEAM FUS STA 181-205		1
-10	13A-32053-5	••TEE - WHEEL WELL BEAM FUS STA 178-205		1
	13A-32130-1	••BRACKET ASSY - M/LDG/GR WHEEL DOOR HINGE & LOCK OPERATING TORQUE SHAFT FORWARD SUPPORT (PORT SIDE)		1
	13A-32130-2	••BRACKET ASSY - M/LDG/GR WHEEL DOOR HINGE & LOCK OPERATING TORQUE SHAFT FORWARD SUPPORT (STARBOARD SIDE)		1
-11	13A-32197-1	•••CHANNEL ASSY - M/LDG/GR WHEEL DOOR HINGE & LOCK OPERATING TORQUE SHAFT FORWARD SUPPORT FRONT (PORT SIDE)		1
	13A-32197-2	•••CHANNEL ASSY - M/LDG/GR WHEEL DOOR HINGE & LOCK OPERATING TORQUE SHAFT FORWARD SUPPORT FRONT (STBD SIDE)		1
-12	13A-32131-1	•••CHANNEL ASSY - M/LDG/GR WHEEL DOOR HINGE & LOCK OPERATING TORQUE SHAFT FORWARD SUPPORT REAR (PORT SIDE)		1
	13A-32131-2	•••CHANNEL ASSY - M/LDG/GR WHEEL DOOR HINGE & LOCK OPERATING TORQUE SHAFT FORWARD SUPPORT REAR (STBD SIDE)		1
	13A-32135-1	••••BOSS - M/LDG/GR WHEEL DOOR OPR JACK LEVER HINGE (PORT SIDE)		1
	13A-32135-2	••••BOSS - M/LDG/GR WHEEL DOOR OPR JACK LEVER HINGE (STARBOARD SIDE)		1
	4S3D516-37	•••SPACER - BOLT (NAA)		1
	2W2SP20-16-1000	•••WASHER - THRUST (NAA)		1
-13	AN5-26A	•••BOLT - (CHANNEL TO CHANNEL ATTACHING)		1
	AN960-516	•••WASHER -		1
	AN365-524	•••NUT -		1
	4S3D416-40	•••SPACER - BOLT (NAA)		1
-14	AN4-16A	•••BOLT - (CHANNEL TO CHANNEL ATT) (PORT)		1
	NAS43DD4-40	•••SPACER - (STARBOARD SIDE)		1
	NAS43DD4-8	•••SPACER - (STARBOARD SIDE)		1
	AN4-26A	•••BOLT - (CHANNEL TO CHANNEL ATT) (STBD)		1
	AN960-416	•••WASHER -		1
	AN365-428	•••NUT -		1
-15	140-33535	•••HOUSING ASSY - MAIN WHEEL DOOR LOCK TORQUE SHAFT FORWARD BEARING		1
	HSB12C	••••BEARING - (HLF) (SELF-ALIGNING)		1
	AN3-4A	•••BOLT - (HOUSING ATTACHING)		4

FIGURE AND INDEX NUMBER	GROUP / MAJOR ASSEMBLY / PART NUMBER	FUSELAGE / FUSELAGE STA 178-205 WHEEL WELL / 1234567 NOMENCLATURE	CODE	UNITS PER ASSY
65 -	AN365-1032	•••NUT -		4
	13A-32132-1	••BRACKET ASSY - M/LDG/GR WHEEL DOOR HINGE & LOCK OPERATING TORQUE SHAFT SUPPORT REAR (PORT SIDE)		1
	13A-32132-2	••BRACKET ASSY - M/LDG/GR WHEEL DOOR HINGE & LOCK OPERATING TORQUE SHAFT SUPPORT REAR (STARBOARD SIDE)		1
-16	13A-32133-1	•••CHANNEL - M/LDG/GR WHEEL DOOR HINGE & LOCK OPERATING TORQUE SHAFT SUPPORT REAR (PORT SIDE)		1
	13A-32133-2	•••CHANNEL - M/LDG/GR WHEEL DOOR HINGE & LOCK OPERATING TORQUE SHAFT SUPPORT REAR (STARBOARD SIDE)		1
-17	140-33536	•••HOUSING ASSY - MAIN WHEEL DOOR LOCK TORQUE SHAFT REAR BEARING		1
	HSB10C	••••BEARING - (HPC) (SELF-ALIGNING)		1
	4S4D6-28	•••SPACER - RIVET (NAA)		1
-18	AN3-14A	•••BOLT - (HOUSING ATTACHING)		1
	AN3-4A	•••BOLT - (HOUSING ATTACHING)		1
	AN365-1032	•••NUT -		3
	AN931-3-9	••GROMMET -		4
	13A-32052-1	•WEB ASSY - WHEEL WELL FUS STA 178-205 PORT	001-100	1
	13A-32052-71	•WEB ASSY - WHEEL WELL FUS STA 178-205 PORT	101-210	1
	13A-32052-101	•WEB ASSY - WHEEL WELL FUS STA 178-205 PORT	211-	1
	13A-32052-2	•WEB ASSY - WHEEL WELL FUS STA 178-205 STBD	001-100	1
	13A-32052-72	•WEB ASSY - WHEEL WELL FUS STA 178-205 STBD	101-421	1
	13A-32052-102	•WEB ASSY - WHEEL WELL FUS STA 178-205 STBD	422-	1
-19	13A-32052-3	••WEB - WHEEL WELL FUS STA 178-205 (PORT)	001-100	1
	13A-32052-73	••WEB - WHEEL WELL FUS STA 178-205 (PORT)	101-210	1
	13A-32052-75	••WEB - WHEEL WELL FUS STA 178-205 (PORT)	211-	1
	13A-32052-4	••WEB - WHEEL WELL FUS STA 178-205 (STBD)	001-210	1
	13A-32052-74	••WEB - WHEEL WELL FUS STA 178-205 (STBD)	211-421	1
	13A-32052-80	••WEB - WHEEL WELL FUSELAGE STA 178-205	422-	1
-20	13A-32052-59	••DOOR - WHEEL WELL WEB ACCESS (PORT SIDE)		1
	13A-32052-60	••DOOR - WHEEL WELL WEB ACCESS (STBD SIDE)	001-210	1
	13A-32052-76	••DOOR - WHEEL WELL WEB ACCESS (STBD SIDE)	211-	1
	S6-250	••SPRING - FASTENER (DFC)		6
	AN960-4	••WASHER -		24
	NAS221-9	••SCREW - (DOOR ATTACHING)	001-370	4
	NAS221-8	••SCREW - (DOOR ATTACHING)	371-	4
-21	NAS221-13	••SCREW - (DOOR ATTACHING)		3
-22	13A-32052-45	••DOOR ASSY - WHEEL WELL WEB ACC(PORT SIDE)		1
-23	NAS221-11	••SCREW - (DOOR ATTACHING) (PORT SIDE)		4
	AN960D10	••WASHER - (PORT SIDE)		4
	13A-32052-15	••COVER - WEB PORT (STARBOARD SIDE)		1
	AN3-4A	••BOLT - (COVER ATTACHING) (STARBOARD SIDE)		8
	AN960D10L	••WASHER - (STARBOARD SIDE)		8
-24	176-53324	••TUBE ASSY - HEAT & VENT SYSTEM PRIMARY EXCHANGER COOLING AIR WATER DRAIN	101-	1
-25	13A-32059-3	•BLISTER - WEB WHEEL WELL REMOVABLE FUSELAGE STA 193 (PORT SIDE)		1
	13A-32059-1	•BLISTER - WEB WHEEL WELL REMOVABLE FUSELAGE STA 193 (STARBOARD SIDE)	001-421	1
	13A-32059-5	•BLISTER - WEB WHEEL WELL REMOVABLE FUSELAGE STA 193 (STARBOARD SIDE)	422-	1
	NAS221-9	•SCREW - (BLISTER ATTACHING)		22
-26	13A-32171-3	•TUBE ASSY - WHEEL WELL DRAIN		1
-27	2C17-10H	•CLIP - TUBE LOOP TYPE (NAA)		2
	NAS220-10	•SCREW - (CLIP ATTACHING)		2
	13A-32172	•STIFFENER ASSY - WHEEL WELL WEB SUPPORT FUSELAGE STA 180		1

FIGURE AND INDEX NUMBER	GROUP / MAJOR ASSEMBLY / PART NUMBER	FUSELAGE / FUSELAGE STA 178-205 WHEEL WELL / 1234567 NOMENCLATURE	CODE	UNITS PER ASSY
65 -28	151-33542-1	•STIFFENER - M/LDG/GR WHEEL DOOR HINGE & LOCK OPERATING TORQUE SHAFT SUPPORT REAR (PORT SIDE)		1
	151-33542-2	•STIFFENER - M/LDG/GR WHEEL DOOR HINGE & LOCK OPERATING TORQUE SHAFT SUPPORT REAR (STARBOARD SIDE)		1
-29	AN3-5A	•BOLT - (STIFFENER ATTACHING)		4
	AN960-10L	•WASHER -		8
	AN365-1032	•NUT -		4
	AN3-5A	•BOLT - (STIFFENER ATTACHING)	001-200	2
	AN3-4A	•BOLT - (STIFFENER ATTACHING)	001-200	12
	AN3-4A	•BOLT - (STIFFENER ATTACHING)	201-	16
		OR		
	AN3-5A	•BOLT - (STIFFENER ATTACHING)		
	13A-32005-861	•WASHER - WHEEL WELL THROAT	001-200	2
	AN365-1032	•NUT -	001-200	14
	AN365-1032	•NUT -	201-	16
-30	13A-32005-9	•SEAL - WHEEL WELL FORWARD INBOARD (PORT)		1
	13A-32005-11	•RETAINER -		1
	13A-32005-21	•SEAL - WHEEL WELL FORWARD INBOARD (STBD)		1
	13A-32005-15	•RETAINER -		2
	13A-32005-17	•SEAL - WHEEL WELL FORWARD OUTBOARD (PORT)		1
	13A-32005-18	•SEAL - WHEEL WELL FORWARD OUTBOARD (STBD)		1
-31	13A-32005-13	•SEAL - WHEEL WELL CENTRE		2
	13A-32005-23	•RETAINER -		1
-32	13A-32005-25	•SEAL - WHEEL WELL REAR INBOARD		2
-33	13A-32005-29	•SEAL - WHEEL WELL REAR (PORT SIDE)		1
	13A-32005-30	•SEAL - WHEEL WELL REAR (STARBOARD SIDE)		1
-34	13A-32005-31	•SEAL - WHEEL WELL REAR OUTBOARD (PORT)		1
	13A-32005-32	•SEAL - WHEEL WELL REAR OUTBOARD (STBD)		1
-35	M-3357M1	COUPLING ASSY - FLEX. SHAFT WING FLAP ACTUATOR (AAI) (SEE SECTION 7)		REF
		-000-		

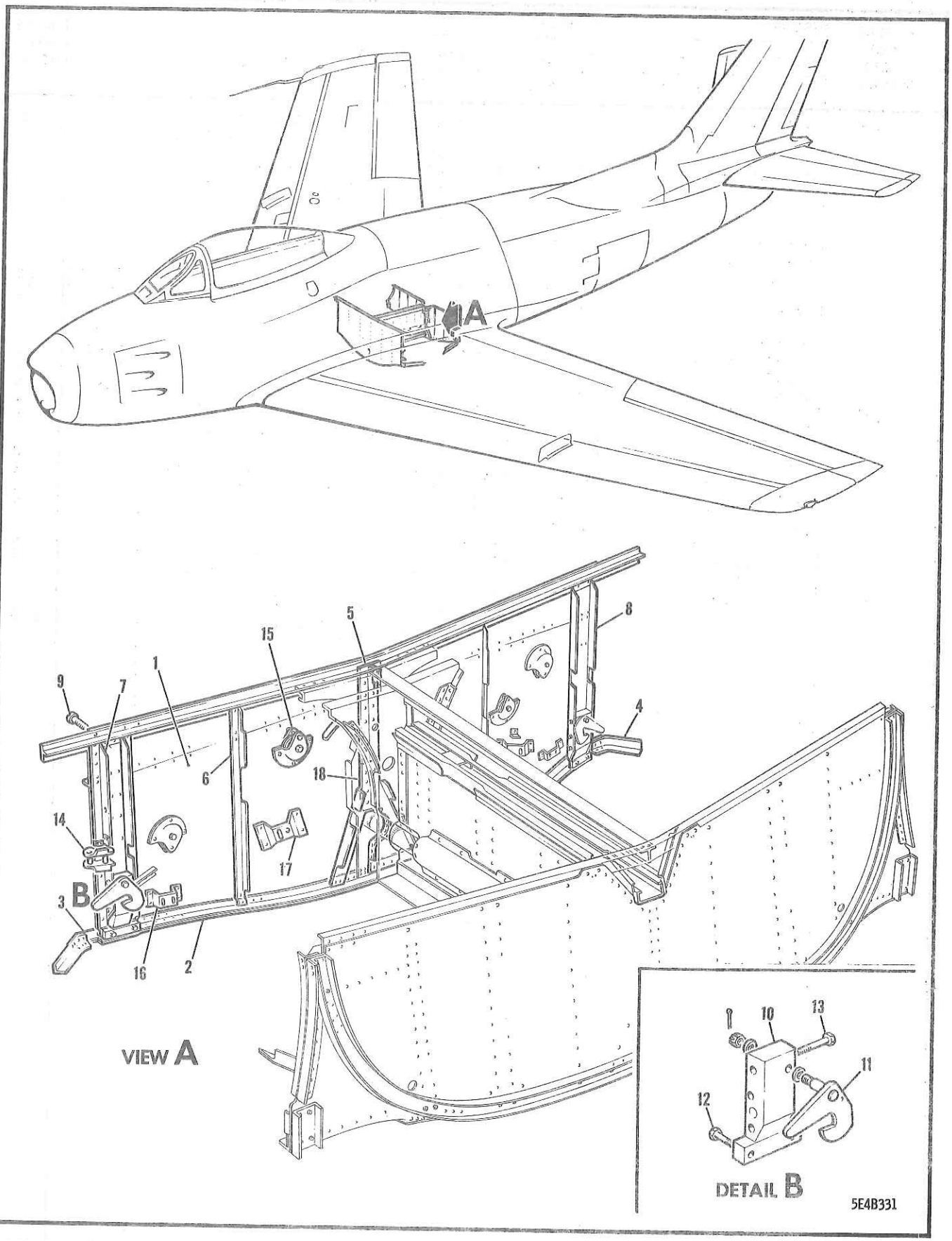

FIGURE 65A FUSELAGE STA 178 WHEEL WELL BULKHEAD

FIGURE AND INDEX NUMBER	GROUP FUSELAGE MAJOR ASSEMBLY FUSELAGE STA 178 WHEEL WELL BULKHEAD PART NUMBER	1234567 NOMENCLATURE	CODE	UNITS PER ASSY
65A-	151-31220-10	BULKHEAD ASSY - BOTTOM FUSELAGE STA 178 (SEE FIG. 65)	001-300	1
	151-31220-810	BULKHEAD ASSY - BOTTOM FUSELAGE STA 178	301-	1
- 1	151-31220-3	•WEB - BULKHEAD BOTTOM FUSELAGE STA 178	001-300	1
	151-31220-803	•WEB - BULKHEAD BOTTOM FUSELAGE STA 178	301-	1
- 2	151-31220-9	•TEE - BULKHEAD BOTTOM FUSELAGE STA 178		1
- 3	151-31220-5	•ANGLE - BULKHEAD BOTTOM FUS STA 178 (PORT)		1
- 4	151-31220-27	•DOUBLER - BULKHEAD BOTTOM FUSELAGE STA 178	001-300	1
	151-31220-827	•DOUBLER - BULKHEAD BOTTOM FUSELAGE STA 178	301-	1
	13A-41017	•STOP - WHEEL WELL FUS STA 178 (STBD SIDE)	001-300	1
	13B-41011	•STOP - WHEEL WELL FUS STA 178 (STBD SIDE)	301-	1
- 5	151-31220-11	•TEE - BULKHEAD BOTTOM FUS STA 178 (CENTRE)		1
- 6	151-31220-13	•ANGLE - BULKHEAD BOTTOM FUS STA 178 (PORT)		1
	151-31220-15	•ANGLE - BULKHEAD BOTTOM FUS STA 178 (STBD)		1
- 7	151-31220-21	•ANGLE - BULKHEAD BOTTOM FUS STA 178 (PORT)		1
	151-31220-23	•ANGLE - BULKHEAD BOTTOM FUS STA 178 (STBD)		1
- 8	151-31220-17	•ANGLE - BULKHEAD BOTTOM FUS STA 178 (PORT)		1
	151-31220-19	•ANGLE - BULKHEAD BOTTOM FUS STA 178 (STBD)		1
- 9	AN500-6-7	•SCREW - (ANGLE ATTACHING)		8
	AN365-632	•NUT -		8
	151-33565-3	•SUPPORT ASSY - MAIN LANDING GEAR WHEEL DOOR FORWARD LOCK (PORT SIDE)		1
	151-33565-4	•SUPPORT ASSY - MAIN LANDING GEAR WHEEL DOOR FORWARD LOCK (STARBOARD SIDE)		1
-10	151-33566-1	••FITTING ASSY - MAIN LANDING GEAR WHEEL DOOR FORWARD LOCK (PORT SIDE)		1
	151-33566-2	••FITTING ASSY - MAIN LANDING GEAR WHEEL DOOR FORWARD LOCK (STARBOARD SIDE)		1
	4B16RF5-16	•••BEARING - SINTERED OIL IMPREGNATED (NAA)		2
	2W1-20-20-16	••WASHER - PLAIN (NAA)		AR
-11	151-33570-1	••HOOK ASSY - MAIN LANDING GEAR WHEEL DOOR FORWARD (PORT SIDE)		1
	151-33570-2	••HOOK ASSY - MAIN LANDING GEAR WHEEL DOOR FORWARD (STARBOARD SIDE)		1
	2W1-13-20-63	••WASHER - PLAIN (NAA)		1
	AN320-3	••NUT -		1
	AN380-2-2	••COTTER-PIN -		1
-12	AN3-7A	•BOLT - (FITTING TO BULKHEAD ATTACHING)		4
	AN365-1032	•NUT -		4
-13	AN4-20A	•BOLT -		6
	AN365-428	•NUT -		6
-14	151-33615-1	•BRACKET ASSY - M/LDG/GR EMY RELEASE FUS STA 178 IDLER PULLEY (PORT SIDE)		1
	151-33615-2	•BRACKET ASSY - M/LDG/GR EMY RELEASE FUS STA 178 IDLER PULLEY (STBD SIDE)		1
-15	151-33617	•BRACKET ASSY - M/LDG/GR EMY RELEASE PULLEY		4
-16	151-54234-950	•BRACKET - MAIN LANDING GEAR DOOR UPPER POSITION INDICATING SWITCH MOUNTING		2
-17	151-54317	•BRACKET - ELECTRICAL MAIN LANDING GEAR DOOR UPLOCK INDICATING SWITCH		2
-18	151-31279	•COVER ASSY - FUEL HOSE FUSELAGE STA 178		1
	151-33614	•BRACKET ASSY - MAIN LANDING GEAR EMERGENCY RELEASE LOWER PULLEY		1
	151-54372	•SPRING - ELECTRICAL MAIN LANDING GEAR DOOR UPLOCK INDICATING SWITCH		2

-000-

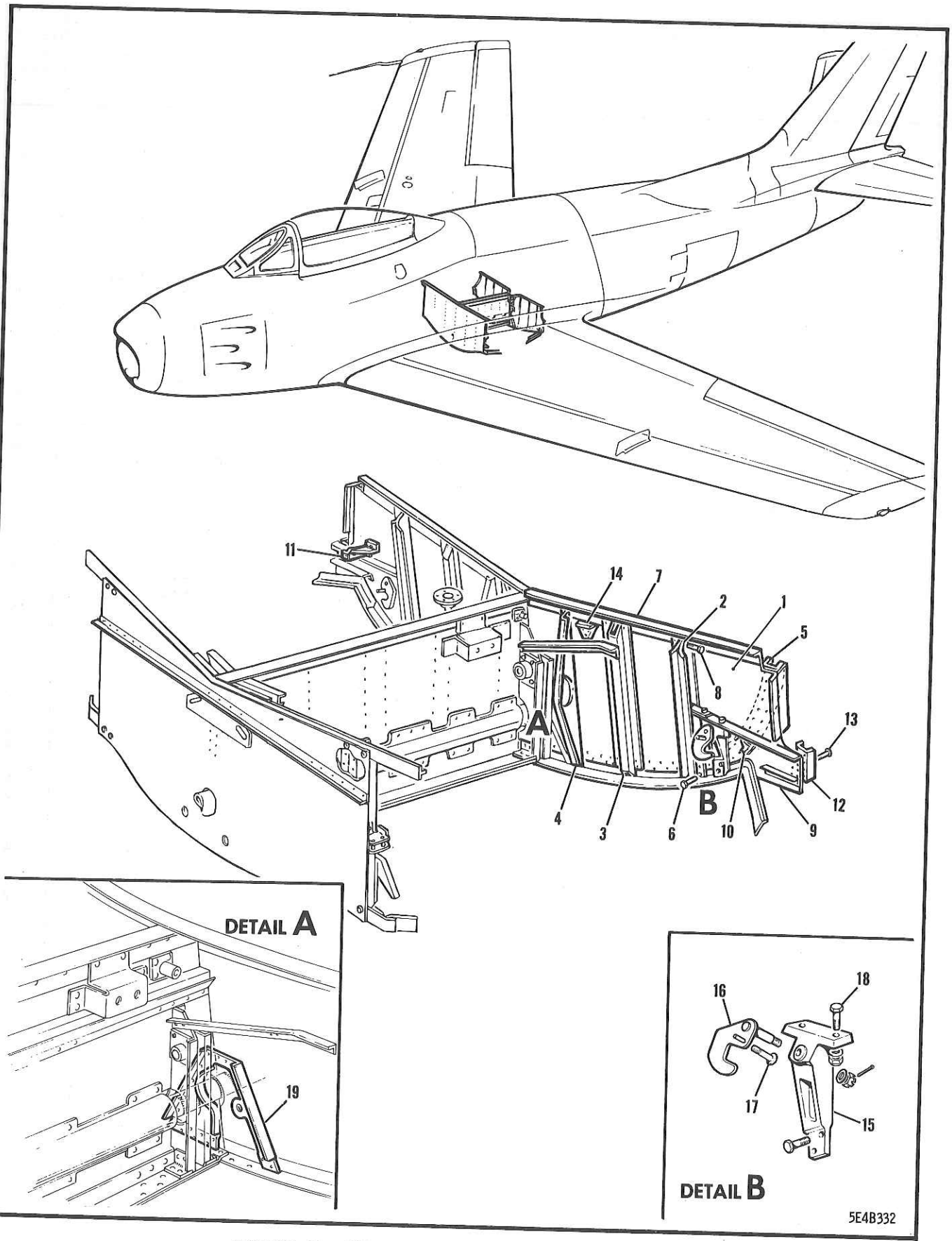

FIGURE 66 FUSELAGE STA 205 WHEEL WELL FRAME

FIGURE AND INDEX NUMBER	GROUP FUSELAGE MAJOR ASSEMBLY FUSELAGE STA 205 WHEEL WELL FRAME PART NUMBER	1234567 NOMENCLATURE	CODE	UNITS PER ASSY
66 -	13A-32050	FRAME ASSY - BOTTOM FUSELAGE STA 205 (SEE FIG. 65)	001-100	1
	13A-32050-100	FRAME ASSY - BOTTOM FUSELAGE STA 205.	101-	1
- 1	13A-32050-3	•WEB - BOTTOM FRAME FUSELAGE STA 205		1
	13A-32050-37	•FRAME ASSY - BOTTOM FUS STA 205 (PORT)		1
	13A-32050-38	•FRAME ASSY - BOTTOM FUS STA 205 (STBD)		1
- 2	13A-32050-27	••CHANNEL - BOTTOM FRAME FUS STA 205 (PORT)		1
	13A-32050-28	••CHANNEL - BOTTOM FRAME FUS STA 205 (STBD)		1
	13A-32050-25	••CHANNEL - BOTTOM FRAME FUS STA 205 (PORT)		1
	13A-32050-33	••CHANNEL - BOTTOM FRAME FUS STA 205 (STBD)		1
- 3	13A-32050-29	•HAT - BOTTOM FRAME FUSELAGE STA 205 (PORT)		1
	13A-32050-30	•HAT - BOTTOM FRAME FUSELAGE STA 205 (STBD)		1
- 4	13A-32050-31	•ZED - BOTTOM FRAME FUSELAGE STA 205 (PORT)		1
	13A-32050-32	•ZED - BOTTOM FRAME FUSELAGE STA 205 (STBD)		1
- 5	13A-32050-5	•CHANNEL - BOTTOM FRAME FUSELAGE STA 205		1
- 6	AN3-5A	•BOLT - (CHANNEL TO CHANNEL & WEB ATT)		10
	AN960-10	•WASHER -		20
	AN365-1032	•NUT -		10
- 7	13A-32050-7	•ANGLE - BOTTOM FRAME FUS STA 205 (PORT)		1
	13A-32050-8	•ANGLE - BOTTOM FRAME FUS STA 205 (STBD)		1
- 8	AN3-4A	•BOLT - (ANGLE TO CHANNEL & WEB ATTACHING)		4
	AN960-10	•WASHER -		8
	AN365-1032	•NUT -		4
- 9	13A-32050-45	•ANGLE - BOTTOM FRAME FUS STA 205 (PORT)		1
	13A-32050-46	•ANGLE - BOTTOM FRAME FUS STA 205 (STBD)	001-100	1
-10	170-54712-1	•BRACKET - ACTUATOR FLEX. SHAFT OUTBD(PORT)		1
-11	170-54712-2	•BRACKET - ACTUATOR FLEX. SHAFT OUTBD(STBD)	001-100	1
	191-54712	•BRACKET - ELECTRICAL ACTUATOR FLEXIBLE SHAFT OUTBOARD (STARBOARD SIDE)	101-	1
-12	13A-32050-39	•CHANNEL - BOTTOM FRAME FUS STA 205 (PORT)		1
	13A-32050-40	•CHANNEL - BOTTOM FRAME FUS STA 205 (STBD)		1
-13	NAS220-9	•SCREW - (CHANNEL TO WEB ATTACHING)		8
	AN960-8	•WASHER -		8
	AN365-832	•NUT -		8
-14	13A-91030-10	•BRACKET - FLAP SYNC FLEXIBLE DRIVE SUPPORT	070-	2
	AN3-4A	•BOLT - (BRACKET TO FRAME ATTACHING)	070-	4
	AN960-10L	•WASHER -	070-	4
	AN365-1032	•NUT -	070-	4
	140-33547-1	•SUPPORT ASSY - M/LDG/GR WHEEL DOOR REAR LOCK COMPLETE (PORT SIDE)		1
	140-33547-2	•SUPPORT ASSY - M/LDG/GR WHEEL DOOR REAR LOCK COMPLETE (STARBOARD SIDE)		1
-15	140-33543-1	••SUPPORT ASSY - WHEEL DOOR REAR LOCK(PORT)		1
	140-33543-2	••SUPPORT ASSY - WHEEL DOOR REAR LOCK(STBD)		1
	4B16RF6-13	•••BEARING - SINTERED OIL IMPREGNATED (NAA)		2
	2W1-24-20-16	••WASHER - PLAIN (NAA)		AR
		OR		
	2W1-13-20-32	••WASHER - PLAIN (NAA)		
-16	140-33545-1	••HOOK ASSY - MAIN WHEEL DOOR REAR (PORT)	001-092	1
	176-33545-1	••HOOK ASSY - MAIN WHEEL DOOR REAR (STBD)	093-	1
	140-33545-2	••HOOK ASSY - MAIN WHEEL DOOR REAR (STBD)	001-092	1
	176-33545-2	••HOOK ASSY - MAIN WHEEL DOOR REAR (STBD)	093-	1
-17	140-33545-7	•••PIN - WHEEL DOOR REAR HOOK	001-092	1
	176-33545-5	•••SCREW - WHEEL DOOR REAR HOOK	093-	1
	2W1-13-20-63	••WASHER - PLAIN (NAA)		1
		OR		
	2W1-13-20-32	••WASHER - PLAIN (NAA)		1
	AN320-3	••NUT -		1
	AN380-2-2	••COTTER-PIN -		6
-18	AN3-6A	•BOLT - (SUPPORT TO ANGLE ATTACHING)		

FIGURE AND INDEX NUMBER	GROUP FUSELAGE MAJOR ASSEMBLY FUSELAGE STA 205 WHEEL WELL FRAME PART NUMBER	1234567 NOMENCLATURE	CODE	UNITS PER ASSY
66 -	AN3-7A	•BOLT - (SUPPORT TO ANGLE ATTACHING)		2
	AN960-10	•WASHER -		8
	AN365-1032	•NUT -		4
-19	151-31501	•COVER - FUEL HOSE FUSELAGE STA 204		1
		-000-		

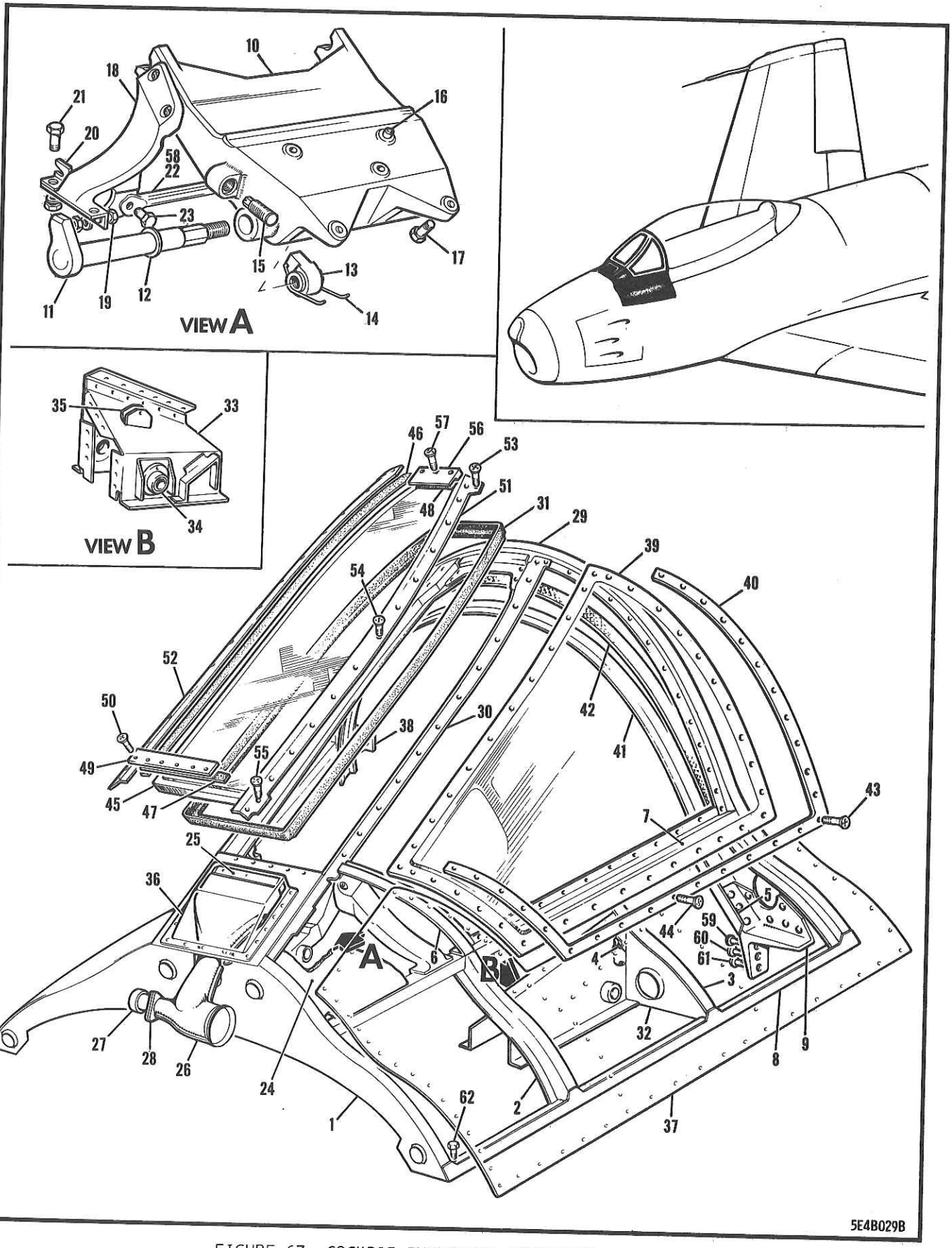

FIGURE 67 COCKPIT ENCLOSURE WINDSHIELD

FIGURE AND INDEX NUMBER	GROUP FUSELAGE MAJOR ASSEMBLY COCKPIT ENCLOSURE WINDSHIELD PART NUMBER	1234567 NOMENCLATURE	CODE	UNITS PER ASSY
67 -	172-31861-40	WINDSHIELD ASSY - COCKPIT ENCLOSURE COMPL (SEE FIG. 37)		1
	172-31862-50	•FRAME ASSY - COCKPIT ENCLOSURE WINDSHIELD		1
- 1	172-31867	••FRAME - FUSELAGE STA 53 CKPT ENCL WNDSHLD		1
- 2	172-31868-1	••FRAME - FUSELAGE STA 62 COCKPIT ENCLOSURE WINDSHIELD PORT SIDE		1
	172-31868-2	••FRAME - FUSELAGE STA 62 COCKPIT ENCLOSURE WINDSHIELD STARBOARD SIDE		1
	172-31869-1	••FRAME ASSY - FUSELAGE STA 72 COCKPIT ENCL WINDSHIELD PORT SIDE		1
- 3	172-31869-3	•••FRAME - COCKPIT ENCLOSURE WNDSHLD PORT		1
- 4	151-58239	•••GUIDE - HYDRAULIC PARKING BRAKE CONTROL		1
	172-31869-2	••FRAME ASSY - FUSELAGE STA 72 COCKPIT ENCL WINDSHIELD STARBOARD SIDE		1
	172-31869-4	•••FRAME - COCKPIT ENCLOSURE WNDSHLD STBD		1
	151-54267	•••CLIP ASSY - ELECTRIC CONSOLE FORWARD		1
- 5	172-31870-1	••FRAME - FUSELAGE STA 81 COCKPIT ENCLOSURE WINDSHIELD PORT SIDE		1
	172-31870-2	••FRAME - FUSELAGE STA 81 COCKPIT ENCLOSURE WINDSHIELD STARBOARD SIDE		1
- 6	172-31826-1	••FRAME ASSY - COCKPIT ENCLOSURE FUS STA 20 CANTED WNDSHLD PORT SIDE		1
	172-31826-2	••FRAME ASSY - COCKPIT ENCLOSURE FUS STA 20 CANTED WNDSHLD STARBOARD SIDE		1
- 7	172-31865-17	••LONGERON ASSY - FUSELAGE STA 53-80 CKPT ENCL WINDSHIELD PORT SIDE		1
	172-31865-18	••LONGERON ASSY - FUSELAGE STA 53-80 CKPT ENCL WINDSHIELD STARBOARD SIDE		1
	AN931-3-5	•••GROMMET - (STBD SIDE)	001-490	1
- 8	172-31866-1	••FORMER - FUSELAGE STA 53-81 COCKPIT ENCL WINDSHIELD PORT SIDE		1
	172-31866-2	••FORMER - FUSELAGE STA 53-81 COCKPIT ENCL WINDSHIELD STARBOARD SIDE		1
- 9	172-31871-1	••FITTING - FUSELAGE STA 81 COCKPIT ENCL WINDSHIELD PORT SIDE		1
	172-31871-2	••FITTING - FUSELAGE STA 81 COCKPIT ENCL WINDSHIELD STARBOARD SIDE		1
	172-69003	••SUPPORT ASSY - TYPE A4 GUNSIGHT HEAD MTG		1
-10	172-69004	•••BRACKET ASSY - TYPE A4 GUNSIGHT HEAD MTG		1
-11	172-61658	•••SHAFT ASSY - TYPE A4 GUNSIGHT HEAD ADAPTER LOCKING		1
-12	2W1-50-38-64	•••WASHER - PLAIN (NAA)		1
-13	172-61659	•••DOG - TYPE A4 GUNSIGHT HEAD ADAPTER RTNG		1
-14	172-61662	•••SPRING - TYPE A4 GUNSIGHT BRACKET UNLKG		1
-15	172-61661	•••SCREW - TYPE A4 GUNSIGHT HD ADAPTER LKG		1
	AN960D916	•••WASHER -		1
	AN310-9	•••NUT -		1
	AN380-3-4	•••COTTER-PIN -		1
-16	5B18C11A	••BOLT - CORROSION-RESISTANT (1/4-28) (NAA)		3
-17	5B18C13A	••BOLT - CORROSION-RESISTANT (1/4-28) (NAA)		2
	AN960D416	••WASHER -		5
	2W1AL16-24-12	••WASHER - PLAIN(NAA)(BETWEEN PLATE & SUP.)		AR
	191-31881	••SUPPORT ASSY - WINDSHIELD ARMOUR GLASS		1
	5B18C12A	••BOLT - CORROSION-RESISTANT (1/4-28) (NAA)		5
	AN960D416	••WASHER -		5
	2W1AL16-24-16	••WASHER - PLAIN (NAA)		5
	172-69005-1	••BRACE - TYPE A4 GUNSIGHT SUPPORT LH		1
-18	172-69005-2	••BRACE - TYPE A4 GUNSIGHT SUPPORT RH		1
-19	5B18C7A	••BOLT - CORROSION-RESISTANT (1/4-28) (NAA)		6
-20	172-61671-1	••CLIP - INSTRUMENT PANEL SHROUD FWD MTG		1

FIGURE AND INDEX NUMBER	GROUP FUSELAGE MAJOR ASSEMBLY COCKPIT ENCLOSURE WINDSHIELD PART NUMBER	1234567 NOMENCLATURE	CODE	UNITS PER ASSY
67 -	172-61671-2	••CLIP - INSTRUMENT PANEL SHROUD FWD MTG		1
-21	5B18C10A	••BOLT - CORROSION-RESISTANT (1/4-28) (NAA)		2
	5B18C12A	••BOLT - CORROSION-RESISTANT (1/4-28) (NAA)		4
	AN960D416	••WASHER -		12
	AN363C428	••NUT -		12
-22	172-61670	••TIE-ROD - WINDSHIELD SUP. QUICK REMOVAL	001-020	1
	A405	••FASTENER - (DFC)	001-020	1
	AN394-19	••PIN -	001-020	1
	AN381-2-10	••COTTER-PIN -	001-020	1
-23	5B18-6A	••BOLT - CORROSION-RESISTANT (1/4-28) (NAA) (ROD STARBOARD SIDE ATTACHING)		1
	AN960C416	••WASHER -		1
	AN363C428	••NUT -		1
-24	172-73560	••PLATE - COCKPIT ENCLOSURE WINDSHIELD FLACK PROTECTOR		1
-25	191-53322	••SPACER - ANTI-ICING SYS WINDSHIELD OUTLET		1
	191-53326	••SHIM - HEAT & VENT SYS WNDSHLD ANTI-ICING		2
	AN507-832R18	••SCREW - (FAIRING TO OUTLET TO SPACER TO SUPPORT ATTACHING)		3
-26	172-53326	••OUTLET ASSY - HEAT & VENT SYSTEM WINDSHIELD ANTI-ICING		1
-27	18423-3-275	•••THERMOSWITCH - (FEN) (ACFT HEATER TYPE)		1
-28	159-53353	•••GASKET - HEAT & VENT MAIN DISTRIBUTION DUCT THERMOSWITCH		1
	AN520-10R10	•••SCREW - (THERMOSWITCH TO OUTLET ATT)		3
	AN960D10L	•••WASHER -		3
	AN365-1032	•••NUT -		3
-29	151-31884-10	••BOW - COCKPIT ENCLOSURE WINDSHIELD		1
-30	172-31864-10	••RETAINER ASSY - COCKPIT ENCL WINDSHIELD ARMOUR GLASS		1
-31	165-31875	••SEAL - COCKPIT ENCL WNDSHLD ARMOUR GLASS		1
	152-31436-10	••SUPPORT ASSY - ELECTRICAL CONSOLE FUS STA 71-80 (STARBOARD SIDE)		1
	151-54306	••SUPPORT ASSY - ELECTRICAL CONSOLE FUS STA 71-80 (PORT SIDE)		1
-32	172-52411-3	••SUPPORT - FUSELAGE STA 71 RUDDER PEDAL MOUNT PORT SIDE		1
	172-52411-4	••SUPPORT - FUSELAGE STA 71 RUDDER PEDAL MOUNT STARBOARD SIDE		1
-33	151-52410-35	••BRACKET ASSY - PILOT RUDDER PEDAL PORT		1
	151-52410-36	••BRACKET ASSY - PILOT RUDDER PEDAL STBD		1
-34	AN218-4	•••BEARING -		2
-35	151-58237	•••BRACKET - HYDRAULIC PARKING BRAKE CONTROL (PORT SIDE)		1
	140-54041	•••BRACKET - SHROUD TO FUS ELECTRICAL PLUG DISCONNECT (STARBOARD SIDE)		1
-36	191-31860	••FAIRING ASSY - WINDSHIELD AI DUCT COVER		1
	AN507-632R18	••SCREW -		3
	7S16-10-8	••SCREW - 100-DEG FLUSH HD CRE (NAA) (FAIRING ATTACHING)		14
-37	172-31862-3	••SKIN - COCKPIT ENCLOSURE WINDSHIELD PORT		1
	172-31862-4	••SKIN - COCKPIT ENCLOSURE WINDSHIELD STBD		1
	172-31862-951	••STIFFENER - COCKPIT ENCLOSURE WINDSHIELD BEADED (STA 58)	021-	AR
-38	13B-51006	•BRACKET - CLOCK MOUNTING (STARBOARD SIDE) (AS PER EO 05-56-6A/65)	A5	1
	13B-51006-10	•BRACKET - ACCELEROMETER MTG (STBD SIDE)	G4	1
	AN509Z10R17	•SCREW - (CLOCK MOUNTING BRACKET ATTACHING)		2
	AN960D10	•WASHER -		2
	AN365B1032	•NUT -		2

FIGURE AND INDEX NUMBER	GROUP FUSELAGE MAJOR ASSEMBLY COCKPIT ENCLOSURE WINDSHIELD PART NUMBER	1234567 NOMENCLATURE	CODE	UNITS PER ASSY
67 -39	165-31854-1	•GLASS - WINDSHIELD SIDE PANEL PORT SIDE		1
	165-31854-2	•GLASS - WINDSHIELD SIDE PANEL STBD SIDE		1
-40	172-31861-3	•RETAINER - WINDSHIELD GLASS PORT SIDE		1
	172-31861-4	•RETAINER - WINDSHIELD GLASS STBD SIDE		1
-41	172-31861-13	•ANGLE - COCKPIT ENCLOSURE WINDSHIELD		1
-42	172-31879	•SPACER - COCKPIT WINDSHIELD SEAL		28
-43	AN509Z10R16	•SCREW - (GLASS & RETAINER ATTACHING)		28
	AN960D10	•WASHER -		28
	AN365B1032	•NUT -		28
-44	AN509Z10R14	•SCREW - (GLASS & RETAINER ATTACHING)		50
	AN960D10	•WASHER -		28
	AN365B1032	•NUT -		1
-45	165-31876	•GLASS - WINDSHIELD ARMOUR		2
-46	172-31861-7	•SEAL - COCKPIT ENCLOSURE WINDSHIELD		1
-47	172-31861-9	•SEAL - COCKPIT ENCLOSURE WINDSHIELD		1
-48	172-31861-11	•SEAL - COCKPIT ENCLOSURE WINDSHIELD		1
-49	191-31859	•RETAINER - COCKPIT ENCL WINDSHIELD ARMOUR GLASS BASE		6
-50	7S16C10-7	•SCREW - 100-DEG CRE FLUSH HEAD (NAA)		1
-51	172-31861-5	•RETAINER - WINDSHIELD GLASS PORT SIDE		1
-52	172-31861-6	•RETAINER - WINDSHIELD GLASS STARBOARD SIDE		4
-53	AN509Z10R16	•SCREW - (GLASS RETAINER ATTACHING)		4
	AN960D10L	•WASHER -		4
	AN365B1032	•NUT -		16
-54	AN509Z10R12	•SCREW - (GLASS RETAINER ATTACHING)		32
	AN960D10	•WASHER -		16
	AN365B1032	•NUT -		2
-55	AN509Z10R16	•SCREW - (GLASS RETAINER ATTACHING)		4
	AN960D10	•WASHER -		2
	AN365B1032	•NUT -		2
	AN509Z10R9	•SCREW - (GLASS RETAINER ATTACHING)		1
-56	165-31877	•FITTING - COCKPIT ENCL WINDSHIELD ARMOUR GLASS RETAINING		3
-57	AN509Z10R16	•SCREW - (GLASS RETAINING FITTING ATT)		3
	AN960D10L	•WASHER -		3
	AN365B1032	•NUT -		REF
	13A-30002	FUSELAGE ASSY - FORWARD STRUCTURE COMPLETE (SEE FIG. 36)		
-58	172-61670	•TIE-ROD - WINDSHIELD SUPPORT QUICK REMOVAL	021-	1
	A405	•FASTENER - (DFC)	021-	1
	AN394-19	•PIN -	021-	1
	AN381-2-10	•COTTER-PIN -	021-	1
-59	NAS222-12	•SCREW - (WINDSHIELD TO LONGERON ATTACHING)		2
-60	NAS222-13	•SCREW - (WINDSHIELD TO LONGERON ATTACHING)		2
-61	NAS222-15	•SCREW - (WINDSHIELD TO LONGERON ATTACHING)		2
	AN960-416	•WASHER -		6
	AN365-428	•NUT -		6
-62	AN3-4A	•BOLT - (FRAME TO LONGERON ATTACHING)		38
	AN960D10	•WASHER -		38
	AN365-1032	•NUT -		38

-000-

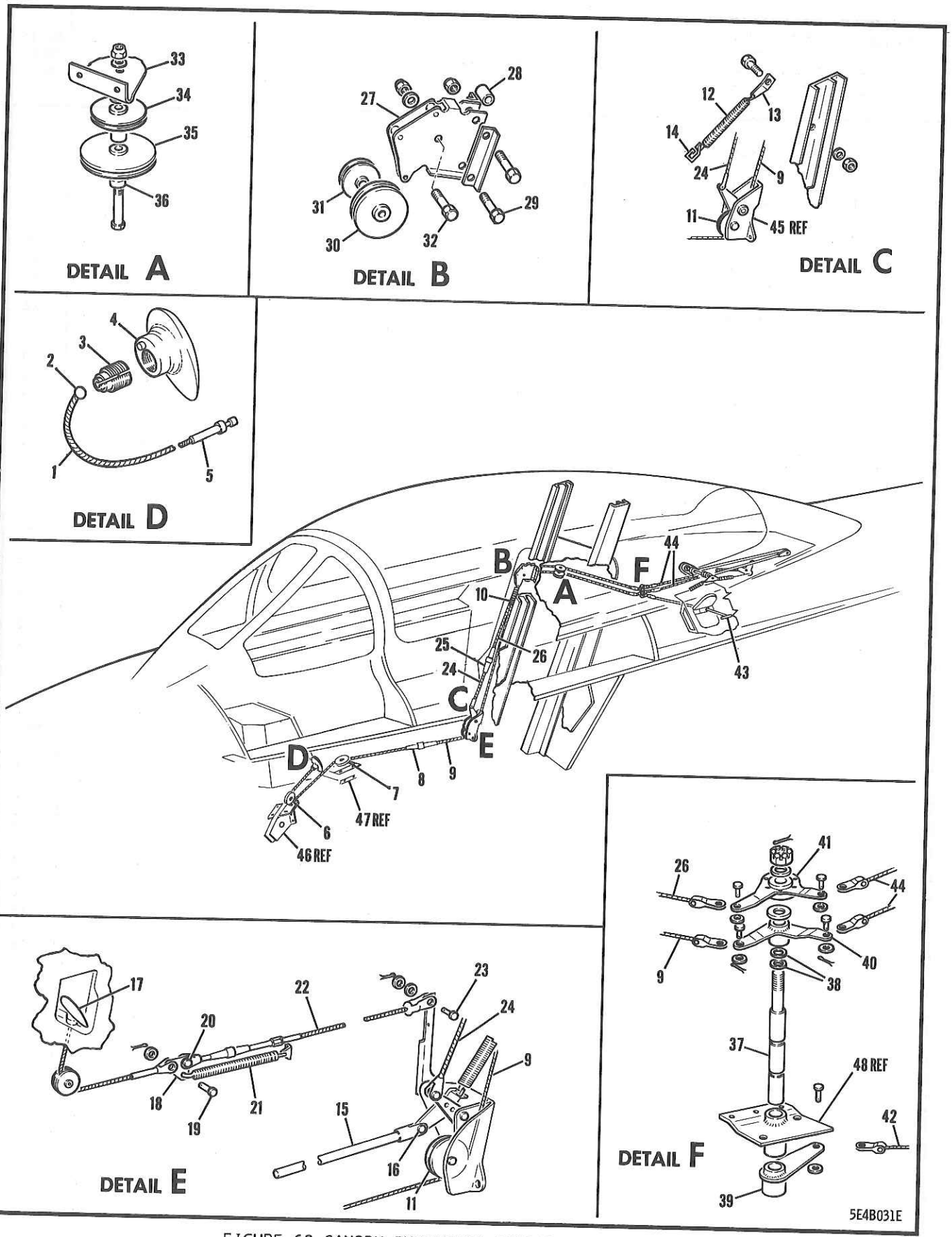

FIGURE 68 CANOPY EMERGENCY RELEASE (SABRE 5)
(EFFECTIVE AIRCRAFT 23001 TO 23370 INCL)

FIGURE AND INDEX NUMBER	GROUP FUSELAGE MAJOR ASSEMBLY CANOPY EMERGENCY RELEASE (SABRE 5) PART NUMBER	1234567 NOMENCLATURE	CODE	UNITS PER ASSY
68 -	152-31801-40	CANOPY INSTL - (SABRE 5) (SEE FIG. 36)	001-210	NP
	152-31801-801	CANOPY INSTL - (SABRE 5)	211-370	NP
	140-31845-11	•CABLE ASSY - CANOPY EMY REL FUS STA 78-118	001-210	1
	140-31845-11	•CABLE ASSY - CANOPY EMY REL FUS STA 78-118	001-210	1
	140-31845-21	•CABLE ASSY - CANOPY EMY REL FUS STA 78-118	211-370	1
	140-31845-21	•CABLE ASSY - CANOPY EMY REL FUS STA 78-118	211-370	1
- 1	140-31845-5	••CABLE - CANOPY EMERGENCY RELEASE	001-210	1
	140-31845-7	••CABLE - CANOPY EMY RELEASE FUS STA 78-118	211-370	1
- 2	RA-2487-2	••TERMINAL - PLAIN BALL SWAGED (ACC)	001-370	1
- 3	151-33619	••GUIDE - CABLE	001-370	1
- 4	140-31822-20	••HANDLE ASSY - CANOPY EMERGENCY RELEASE INNER FUSELAGE STA 78	001-370	1
- 5	1T9-2RH	••TERMINAL - THREADED (NAA)	001-210	1
	AN669S2LH	••TERMINAL -	211-370	1
- 6	AN210-2A	•PULLEY -	001-370	1
	AN3-6A	•BOLT - (PULLEY ATTACHING)	001-370	1
	AN365-1032	•NUT -	001-370	1
- 7	AN210-1A	•PULLEY -	001-370	1
	AN3-6A	•BOLT - (PULLEY ATTACHING)	001-370	1
	AN960-10	•WASHER -	001-370	1
	AN365-1032	•NUT -	001-370	1
- 8	AN155-8S	•BARREL -	001-370	1
- 9	152-31880-20	•CABLE ASSY - COCKPIT ENCL CANOPY EMERGENCY RELEASE FUSELAGE STA 118 UPPER	001-370	1
	152-31880-5	••CABLE - COCKPIT ENCL CANOPY EMERGENCY RELEASE FUSELAGE STA 118 UPPER	001-370	1
	AN669S2RH	••TERMINAL -	001-370	1
	RA-2487-2	••TERMINAL - PLAIN BALL SWAGED (ACC)	001-370	1
	2611	••TERMINAL - (SHI) (SPRING ATTACHING)	001-370	1
	RA-2500-2	••TERMINAL - BALL-WITH-STRAP (ACC)	001-370	1
	AN393-7	•PIN -	001-370	1
	AN960-10L	•WASHER -	001-370	1
	AN380-2-2	•COTTER-PIN -	001-370	1
-10	140-31838	•SPRING - COIL TENSION	001-370	1
-11	AN210-2A	•PULLEY -	001-370	1
	AN3-10	•BOLT - (PULLEY ATTACHING)	001-200	1
	AN3-11	•BOLT - (PULLEY ATTACHING)	201-370	1
	AN960-10	•WASHER -	001-370	1
	AN310-3	•NUT -	001-370	1
	AN380-2-2	•COTTER-PIN -	001-370	1
	172-31880	•SPRING ASSY - COCKPIT ENCLOSURE CANOPY EMY RELEASE CABLE	001-370	1
-12	140-31049	••SPRING - AMMUNITION ACCESS DOOR CABLE	001-370	1
-13	172-31880-5	••CLIP - COCKPIT CANOPY ENCL EMY REL CABLE	001-370	1
-14	172-31880-3	••HOOK - COCKPIT CANOPY ENCL EMY REL CABLE	001-370	1
	AN509-10R11	•SCREW -	001-370	1
	AN960-10	•WASHER -	001-370	1
	AN365-1032	•NUT -	001-370	1
-15	13A-83018	•TUBE ASSY - CANOPY EMERGENCY RELEASE (AS PER EO 05-5E-6B/11)	001-370	1
		OR		
	13A-83018-804	•TUBE ASSY - CANOPY EMERGENCY RELEASE	001-370	
	13A-83018-2	••TUBE - CANOPY EMERGENCY RELEASE	001-370	1
	AN481-12P	••CLEVIS -	001-370	1
-16	AN393-13	•PIN - (TUBE TO SECTOR ATTACHING)	001-370	1
	AN960-10L	•WASHER -	001-370	1
	AN380-2-2	•COTTER-PIN -	001-370	1
-17	13A-83013	•CABLE ASSY - CANOPY EMERGENCY RELEASE FWD (AS PER EO 05-5E-6B/11)	001-370	1
	13A-83013-2	••CABLE ASSY - CANOPY EMERGENCY RELEASE FWD	001-370	1

FIGURE AND INDEX NUMBER	GROUP / MAJOR ASSEMBLY / PART NUMBER	FUSELAGE / CANOPY EMERGENCY RELEASE (SABRE 5) / 1234567 NOMENCLATURE	CODE	UNITS PER ASSY
68 -	13A-83013-4	•••CABLE - CANOPY EMERGENCY RELEASE FORWARD	001-370	1
	AN667-2	•••TERMINAL -	001-370	1
	RA-2487-2	•••TERMINAL - PLAIN BALL SWAGED (ACC)	001-370	1
	140-31822-800	••HANDLE ASSY - CANOPY EMERGENCY RELEASE INNER FUS STA 78	001-370	1
	151-33619	••GUIDE - CABLE	001-370	1
-18	13A-83023	•LINK - CANOPY EMERGENCY RELEASE CABLE (AS PER EO 05-5E-6B/11)	001-370	1
-19	AN393-9	•PIN - (FWD RELEASE CABLE TO LINK ATT)	001-370	1
-20	AN393-11	•PIN - (REAR RELEASE CABLE TO LINK ATT)	001-370	1
	AN960-10	•WASHER -	001-370	2
	AN380-2-2	•COTTER-PIN -	001-370	2
-21	191-53109	•SPRING - TENSION	001-370	1
-22	13A-83022-10	•CABLE ASSY - CANOPY EMERGENCY RELEASE REAR (AS PER EO 05-5E-6B/11)	001-370	1
	REF 32E/89	••SLEEVE - (AS PER EO 05-5E-6A/242)	001-370	AR
	13A-83022-2	••CABLE ASSY - CANOPY EMERGENCY REL REAR	001-370	1
	AN155-8S	••TURNBUCKLE -	001-370	1
	AN161-8LS	••FORK -	001-370	1
	AN669S2RH	••TERMINAL -	001-370	1
	RA-2487-2	••TERMINAL - PLAIN BALL SWAGED (ACC)	001-370	1
	RA-2500-2	••TERMINAL - BALL-WITH-STRAP (ACC)	001-370	1
-23	AN393-7	•PIN -	001-370	1
	AN960-10	•WASHER -	001-370	1
	AN380-2-2	•COTTER-PIN -	001-370	1
-24	152-318107-10	•CABLE ASSY - CANOPY EMERGENCY LOWER REL	001-370	1
	152-318107-5	••CABLE - CANOPY EMERGENCY LOWER RELEASE	001-370	1
	AN667-2	••TERMINAL -	001-370	1
	AN669S2LH	••TERMINAL -	001-370	1
	AN393-7	•PIN - (CABLE TO SECTOR ATTACHING)	001-370	1
	AN380-2-2	•COTTER-PIN -	001-370	1
-25	AN155-8S	•BARREL -	001-370	1
-26	152-318108	•CABLE ASSY - CANOPY EMERGENCY UP• RELEASE	001-370	1
	152-318108-3	••CABLE - CANOPY EMERGENCY UPPER RELEASE	001-370	1
	RA-2487-2	••TERMINAL - PLAIN BALL SWAGED (ACC)	001-370	1
	RA-2500-2	••TERMINAL - BALL-WITH-STRAP (ACC)	001-370	1
	AN669S2RH	••TERMINAL -	001-370	1
	AN393-7	•PIN -	001-370	1
	AN960-10L	•WASHER -	001-370	1
	AN380-2-2	•COTTER-PIN -	001-370	1
-27	152-31898	•BRACKET ASSY - CANOPY EMERGENCY REL UPPER PULLEY FUS STA 118	001-370	1
-28	4S3D10-19	•SPACER - SCREW & BOLT (NAA)	001-370	2
-29	AN3-11A	•BOLT - (PULLEY BRACKET ATTACHING)	001-370	2
	AN365-1032	•NUT -	001-370	2
-30	AN210-1A	•PULLEY -	001-370	1
-31	AN210-2A	•PULLEY -	001-370	1
-32	AN3-10	•BOLT - (PULLEY ATTACHING)	001-370	1
-33	152-318109-10	•BRACKET - CANOPY RELEASE MECHANISM PULLEY (FOR UPPER CODE SEE FIG• 38)	001-370	1
	AN3-6A	•BOLT - (PULLEY BRACKET ATTACHING)	001-370	2
	AN960-10L	•WASHER -	001-370	2
	AN365-1032	•NUT -	001-370	2
	AN960-10	•WASHER -	001-370	1
-34	AN210-1A	•PULLEY -	001-370	1
	152-318102	•BUSHING - CANOPY RELEASE MECHANISM PULLEY	001-370	1
-35	AN210-3A	•PULLEY -	001-370	1
-36	152-318101	•SPACER - CANOPY RELEASE MECHANISM PULLEY	001-370	1
	AN3-16A	•BOLT - (PULLEY ATTACHING)	001-370	1
	AN960D10	•WASHER -	001-370	1
	AN365-1032	•NUT -	001-370	1

FIGURE AND INDEX NUMBER	GROUP FUSELAGE MAJOR ASSEMBLY CANOPY EMERGENCY RELEASE (SABRE 5) PART NUMBER	1234567 NOMENCLATURE	CODE	UNITS PER ASSY
68 -37	152-31877-3	•SHAFT - CANOPY RELEASE MECH BELL-CRANK (FOR UPPER CODE SEE FIG. 38)	001-370	1
-38	AN6227B5	•PACKING -	001-370	2
-39	152-31878-10	•BELL-CRANK ASSY - CANOPY RELEASE MECH LWR (FOR UPPER CODE SEE FIG. 38)	001-370	1
	AN392-17	•PIN -	001-370	1
	AN960-4	•WASHER -	001-370	1
	AN380-2-2	•COTTER-PIN -	001-370	1
-40	152-31876	•BELL-CRANK ASSY - CANOPY REL MECH UPPER	001-370	1
	AN392-17	•PIN -	001-370	1
	AN960-4	•WASHER -	001-370	1
	AN380-2-2	•COTTER-PIN -	001-370	1
-41	152-31896	•BELL-CRANK ASSY - CANOPY RELEASE MECHANISM	001-370	1
	AN960-416L	•WASHER -	001-370	2
	AN310-4	•NUT -	001-370	1
	AN380-2-2	•COTTER-PIN -	001-370	1
-42	152-31881	•CABLE ASSY - CANOPY OUTER EMY REL HANDLE	001-370	1
	152-31881-3	••CABLE - CANOPY OUTER EMY RELEASE HANDLE	001-370	1
	RA-2487-2	••TERMINAL - PLAIN BALL SWAGED (ACC)	001-370	1
	RA-2500-2	••TERMINAL - BALL-WITH-STRAP (ACC)	001-370	2
	AN393-7	•PIN -	001-370	1
	AN960-10L	•WASHER -	001-370	1
	AN380-2-2	•COTTER-PIN -	001-370	1
-43	140-31847	•HANDLE ASSY - CANOPY EMERGENCY REL OUTER	001-370	1
	AN393-7	•PIN -	001-370	1
	AN380-2-2	•COTTER-PIN -	001-370	1
-44	152-318106	•CABLE ASSY - CANOPY EMERGENCY REAR RELEASE	001-370	2
	152-318106-3	••CABLE - CANOPY EMERGENCY REAR RELEASE	001-370	1
	RA-2500-2	••TERMINAL - BALL-WITH-STRAP (ACC)	001-370	2
	RA-2487-2	••TERMINAL - PLAIN BALL SWAGED (ACC) (FOR UPPER CODE SEE FIG. 38)	001-370	2
	AN393-7	•PIN -	001-370	3
	AN393-11	•PIN -	001-370	1
	AN960-10L	•WASHER -	001-370	4
	AN380-2-2	•COTTER-PIN -	001-370	4
	176-31856	•PLATE ASSY - COCKPIT ENCLOSURE CANOPY EXTRACTOR WARNING	001-370	1
	AN500A10-5	•SCREW - (FOR M1 EXTRACTOR ATTACHING)	001-370	AR
-45	152-31867	BRACKET ASSY - CANOPY RELEASE MECH PULLEY (SEE FIG. 55)		REF
-46	151-31842-9	BRACKET ASSY - FUSELAGE STA 78 CANOPY EMY RELEASE PULLEY (SEE FIG. 47)		REF
-47	140-31841	BRACKET ASSY - FUSELAGE STA 93 CANOPY EMY RELEASE PULLEY (SEE FIG. 48)		REF
-48	152-31870	BEARING ASSY - CANOPY REL MECH BELL-CRANK (SEE FIG. 38)		REF
-50	152-31870	BEARING ASSY - CANOPY REL MECH BELL-CRANK (SEE FIG. 38)		REF

(CONTINUED SEE FIG. 70)

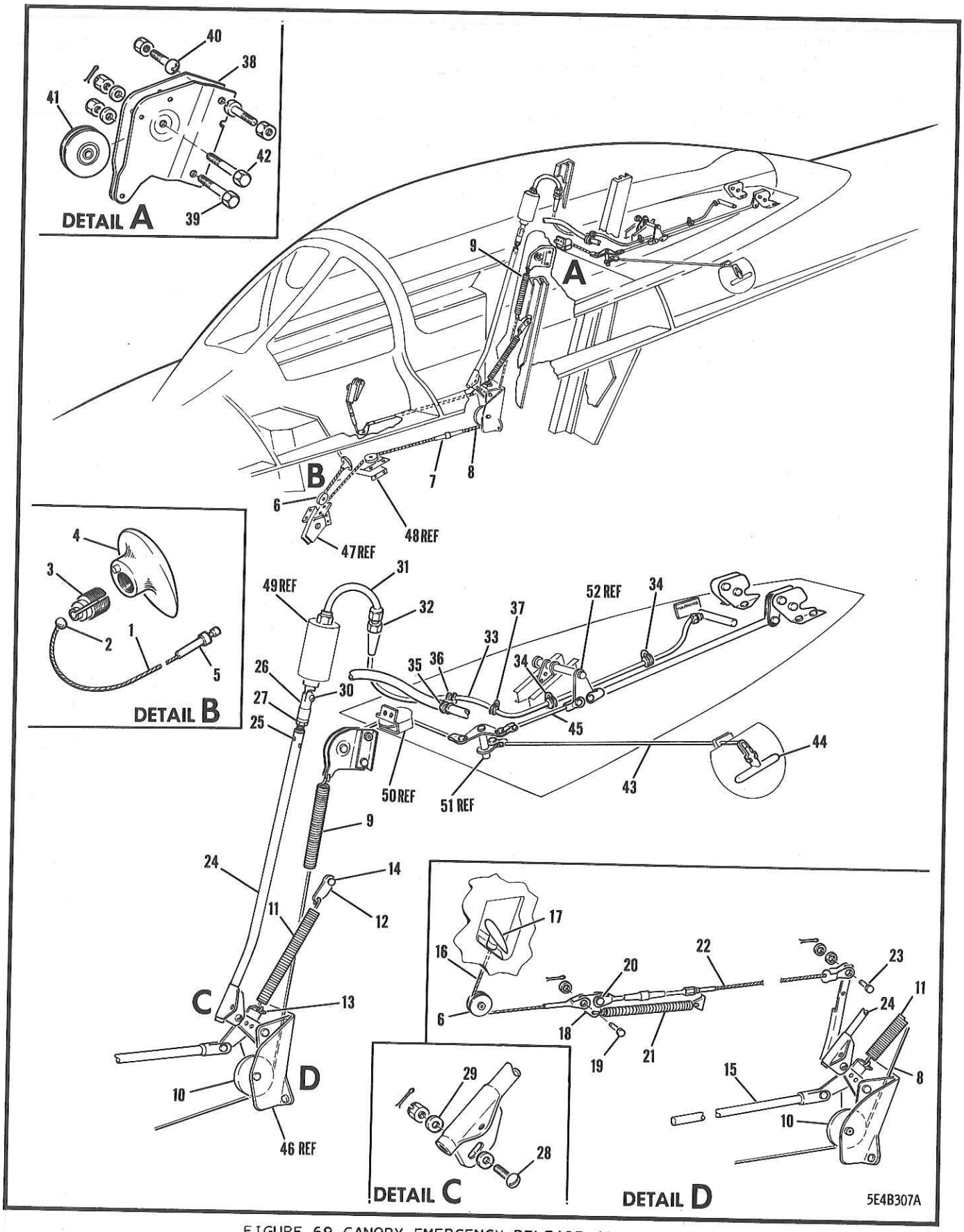

FIGURE 69 CANOPY EMERGENCY RELEASE (SABRE 6)
(EFFECTIVE AIRCRAFT 23371 & SUBS)

FIGURE AND INDEX NUMBER	GROUP FUSELAGE MAJOR ASSEMBLY CANOPY EMERGENCY RELEASE (SABRE 6) PART NUMBER	1234567 NOMENCLATURE	CODE	UNITS PER ASSY
69 -	176-31801	CANOPY INSTL - COCKPIT ENCL (SABRE 6) (SEE FIG. 36)	371-	NP
	140-31845-21	•CABLE ASSY - CANOPY EMY REL FUS STA 78-118	371-	1
- 1	140-31845-7	••CABLE - CANOPY EMY RELEASE FUS STA 78-118	371-	1
- 2	RA-2487-2	••TERMINAL - PLAIN BALL SWAGED (ACC)	371-	1
- 3	151-33619	••GUIDE - CABLE	371-	1
- 4	140-31822-20	••HANDLE ASSY - CANOPY EMERGENCY RELEASE INNER FUS STA 78	371-574	1
	140-31822-20	••HANDLE ASSY - CANOPY EMERGENCY RELEASE INNER FUS STA 78	575-	1
- 5	AN669S2LH	••TERMINAL -	371-	1
- 6	AN210-2B	•PULLEY -	371-	1
	AN3-6A	•BOLT - (PULLEY ATTACHING)	371-	1
	AN365-1032	•NUT -	371-	1
	AN960D10L	•WASHER -	371-	1
	AN365-1032	•NUT -	371-	1
- 7	AN155-8S	•BARREL -	371-	1
- 8	152-31880-20	•CABLE ASSY - COCKPIT ENCLOSURE CANOPY EMERGENCY RELEASE FUS STA 118 UPPER	371-	1
	152-31880-5	••CABLE -COCKPIT ENCLOSURE CANOPY EMERGENCY RELEASE FUS STA 118 UPPER	371-	1
	AN669S2RH	••TERMINAL -	371-	1
	RA-2487-2	••TERMINAL - PLAIN BALL SWAGED (ACC)	371-	1
	2611	••TERMINAL - (SHI) (SPRING ATTACHING)	371-	1
	RA-2500-2	••TERMINAL - BALL-WITH-STRAP (ACC)	371-	1
	AN393-7	•PIN -	371-	1
	AN960D10L	•WASHER -	371-	1
	AN380-2-2	•COTTER-PIN -	371-	1
- 9	140-31838	•SPRING - COIL TENSION	371-	1
-10	AN210-2B	•PULLEY -	371-	1
	AN3-11	•BOLT - (PULLEY ATTACHING)	371-	1
	AN960-10	•WASHER -	371-	1
	AN310-3	•NUT -	371-	1
	AN380-2-2	•COTTER-PIN -	371-	1
	191-31880	•SPRING ASSY - COCKPIT ENCLOSURE CANOPY EMERGENCY RELEASE CABLE	371-	1
-11	191-53109	••SPRING - TENSION (AS PER EO 05-5E-6B/11)	371-	1
-12	191-31880-5	••CLIP - COCKPIT ENCL CANOPY EMY REL CABLE	371-	1
-13	191-31880-3	••HOOK - COCKPIT ENCL CANOPY EMY REL CABLE	371-	1
-14	AN509-10R11	•SCREW -	371-	1
	AN960-10	•WASHER -	371-	1
	AN365-1032	•NUT -	371-	1
	13A-83018	•TUBE ASSY - CANOPY EMERGENCY RELEASE (AS PER EO 05-5E-6B/11)	371-731	1
	13A-83018-802	•TUBE ASSY - CANOPY EMERGENCY RELEASE	732-	1
-15	13A-83018-2	••TUBE - CANOPY EMERGENCY RELEASE	371-731	1
	13A-83018-6	••TUBE - CANOPY EMERGENCY RELEASE	732-	1
	AN481-12P	••CLEVIS -	371-	1
	13A-83013	•CABLE ASSY - CANOPY EMERGENCY RELEASE FWD	371-	1
	13A-83013-2	••CABLE ASSY - CANOPY EMERGENCY RELEASE FWD	371-	1
-16	13A-83013-4	•••CABLE - CANOPY EMERGENCY RELEASE FORWARD	371-	1
	AN667-2	•••TERMINAL -	371-	1
	RA-2487-2	•••TERMINAL - PLAIN BALL SWAGED (ACC)	371-	1
-17	140-31822-800	••HANDLE ASSY - CANOPY EMERGENCY RELEASE INNER FUS STA 78	371-	1
	151-33619	••GUIDE - CABLE	371-	1
-18	13A-83023	•LINK - CANOPY EMERGENCY RELEASE CABLE (AS PER EO 05-5E-6B/11)	371-	1
-19	AN393-9	•PIN -	371-	1
-20	AN393-11	•PIN -	371-	1

FIGURE AND INDEX NUMBER	GROUP / MAJOR ASSEMBLY / PART NUMBER	FUSELAGE / CANOPY EMERGENCY RELEASE (SABRE 6) / 1234567 NOMENCLATURE	CODE	UNITS PER ASSY
69 -	AN960-10	•WASHER -	371-	2
	AN380-2-2	•COTTER-PIN -	371-	2
	191-53109	•SPRING - TENSION (AS PER EO 05-5E-6B/11)	371-	1
-21	13A-83022-10	•CABLE ASSY - CANOPY EMERGENCY RELEASE REAR (AS PER EO 05-5E-6B/11)	371-	1
	REF 32E/89	••SLEEVE - (AS PER EO 05-5E-6A/242)	371-	AR
	13A-83022-2	••CABLE ASSY - CANOPY EMERGENCY REL REAR	371-	1
-22	13A-83022-4	•••CABLE - CANOPY EMERGENCY RELEASE REAR	371-	1
	AN669S2RH	•••TERMINAL -	371-	1
	RA-2487-2	•••TERMINAL - PLAIN BALL SWAGED (ACC)	371-	1
	RA-2500-2	•••TERMINAL - BALL-WITH-STRAP (ACC)	371-	1
	AN155-8S	••TURNBUCKLE -	371-	1
	AN161-8LS	••FORK -	371-	1
	10C2B16-11-3/4	••CONDUIT - FLEXIBLE PLASTIC TUBING (NAA)	371-	1
-23	AN393-7	•PIN -	371-	1
	AN960-10	•WASHER -	371-	1
	AN380-2-2	•COTTER-PIN -	371-	1
	AN393-13	•PIN -	371-	1
	AN960D10L	•WASHER -	371-	1
	AN380-2-2	•COTTER-PIN -	371-	1
-24	172-31894-10	•TUBE ASSY - CANOPY EMERGENCY RELEASE VERT	371-	1
-25	1R12-6-.049-DG8	••ROD-END - THREADED (NAA)	371-	1
-26	AN486-4	••CLEVIS -	371-	1
-27	AN316-4	••NUT -	371-	1
-28	AN23-9	•BOLT - (TUBE ATTACHING)	371-	1
-29	NAS43C3-6	•SPACER -	371-	2
	AN310-3	•NUT -	371-	1
	AN381-2-7	•COTTER-PIN -	371-	1
-30	AN23-10	•BOLT - (CLEVIS TO INITIATOR ATTACHING)	371-	1
	AN310-3	•NUT -	371-	1
	AN381-2-2	•COTTER-PIN -	371-	1
-31	176-31809	•TUBE ASSY - CANOPY JETT FIRING MECHANISM	371-	1
-32	AN815-4	•UNION -	371-	1
-33	AN6271-4-44	•HOSE ASSY - HYDRAULIC & PNEUMATIC DETACHABLE END SWIVEL FITTING	371-	1
-34	AN742D10C	•CLAMP -	371-	2
	AN3-5A	•BOLT - (CLAMP ATTACHING)	371-	2
	AN960D10	•WASHER -	371-	2
	AN365-1032	•NUT -	371-	2
-35	AN742D18C	•CLAMP -	371-530	1
	MS21919DG16	•CLAMP - AIRCRAFT LOOP TYPE SUP. CUSHIONED	531-	2
-36	AN742D10C	•CLAMP -	371-530	1
	MS21919DG8	•CLAMP - AIRCRAFT LOOP TYPE SUP. CUSHIONED	531-	2
	AN3-5A	•BOLT - (CLAMP ATTACHING)	371-530	1
	AN3-5A	•BOLT - (CLAMP ATTACHING)	531-	2
	AN960D10	•WASHER -	371-530	1
	AN960D10	•WASHER -	531-	2
	AN365-1032	•NUT -	371-530	1
	AN365-1032	•NUT -	531-	2
-37	MS21919DG8	•CLAMP - AIRCRAFT LOOP TYPE SUP. CUSHIONED (AS PER EO 05-5E-6A/181)	581-	1
	AN520-10R5	•SCREW - (CLAMP ATTACHING)	581-	1
	AN960D10	•WASHER -	581-	1
	AN365-1032	•NUT -	581-	1
-38	176-31898	•BRACKET - COCKPIT ENCL CANOPY REL CABLE PULLEY FUS STA 122	371-	1
-39	AN3-11A	•BOLT - (PULLEY BRACKET ATTACHING)	371-	1
	AN960D10	•WASHER -	371-	1
	AN365-1032	•NUT -	371-	1
-40	AN520-10R5	•SCREW - (PULLEY BRACKET ATTACHING)	371-	2
	AN364-1032	•NUT -	371-	2

FIGURE AND INDEX NUMBER	GROUP FUSELAGE MAJOR ASSEMBLY CANOPY EMERGENCY RELEASE (SABRE 6) PART NUMBER	1234567 NOMENCLATURE	CODE	UNITS PER ASSY
69 -	NAS427K8	•PIN -	371-	2
-41	AN210-1B	•PULLEY -	371-	1
-42	AN3-7	•BOLT - (PULLEY ATTACHING)	371-	1
	AN960D10L	•WASHER -	371-	1
	AN310-3	•NUT -	371-	1
	AN380-2-2	•COTTER-PIN -	371-	1
-43	152-31881	•CABLE ASSY - CANOPY OUTER EMY REL HANDLE	371-	1
	152-31881-3	••CABLE - CANOPY OUTER EMY RELEASE HANDLE	371-	1
	RA-2487-2	••TERMINAL - PLAIN BALL SWAGED (ACC)	371-	2
	RA-2500-2	••TERMINAL - BALL-WITH-STRAP (ACC)	371-	1
	AN393-7	•PIN -	371-	1
	AN960-10L	•WASHER -	371-	1
	AN380-2-2	•COTTER-PIN -	371-	1
-44	140-31847	•HANDLE ASSY - CANOPY EMERGENCY REL OUTER	371-	1
	AN393-7	•PIN -	371-	1
	AN380-2-2	•COTTER-PIN -	371-	1
	176-31892	•CABLE ASSY - COCKPIT ENCL CANOPY EJECTION RELEASE BELL-CRANK FUSELAGE STA 136	371-	1
-45	176-31892-3	••CABLE - COCKPIT ENCL EJ REL BELL-CRANK	371-	1
	AN666-2RH	••TERMINAL -	371-	1
	RA-2500-2	••TERMINAL - BALL-WITH-STRAP (ACC)	371-	1
	AN664C2	••TERMINAL -	371-	1
	AN665-10R	••TERMINAL -	371-	1
	AN393-7	•PIN -	371-	1
	AN960D10L	•WASHER -	371-	1
	AN380-2-2	•COTTER-PIN -	371-	1
-46	152-31867	BRACKET ASSY - CANOPY RELEASE MECHANISM PULLEY (SEE FIG. 55)		REF
-47	151-31842-9	BRACKET ASSY - FUSELAGE STA 78 CANOPY EMY RELEASE PULLEY (SEE FIG. 47)		REF
-48	140-31841	BRACKET ASSY - FUSELAGE STA 93 CANOPY EMY RELEASE PULLEY (SEE FIG. 48)		REF
-49	CLX-32-1	INITIATOR - TYPE M3 (CANOPY EMY RELEASE) (SEE SECTION 6)		REF
-50	176-31894	BRACKET - COCKPIT ENCL CANOPY RELEASE CABLE PULLEY (SEE FIG. 38)		REF
-51	176-31877	SHAFT - COCKPIT ENCL FUS STA 126 CANOPY REL MECH BELL-CRANK (SEE FIG. 38)		REF
-52	176-31876	BELL-CRANK ASSY - COCKPIT ENCL FUS STA 136 CANOPY EJECTION LATCH (SEE FIG. 38)		REF
		(CONTINUED SEE FIG. 70)		

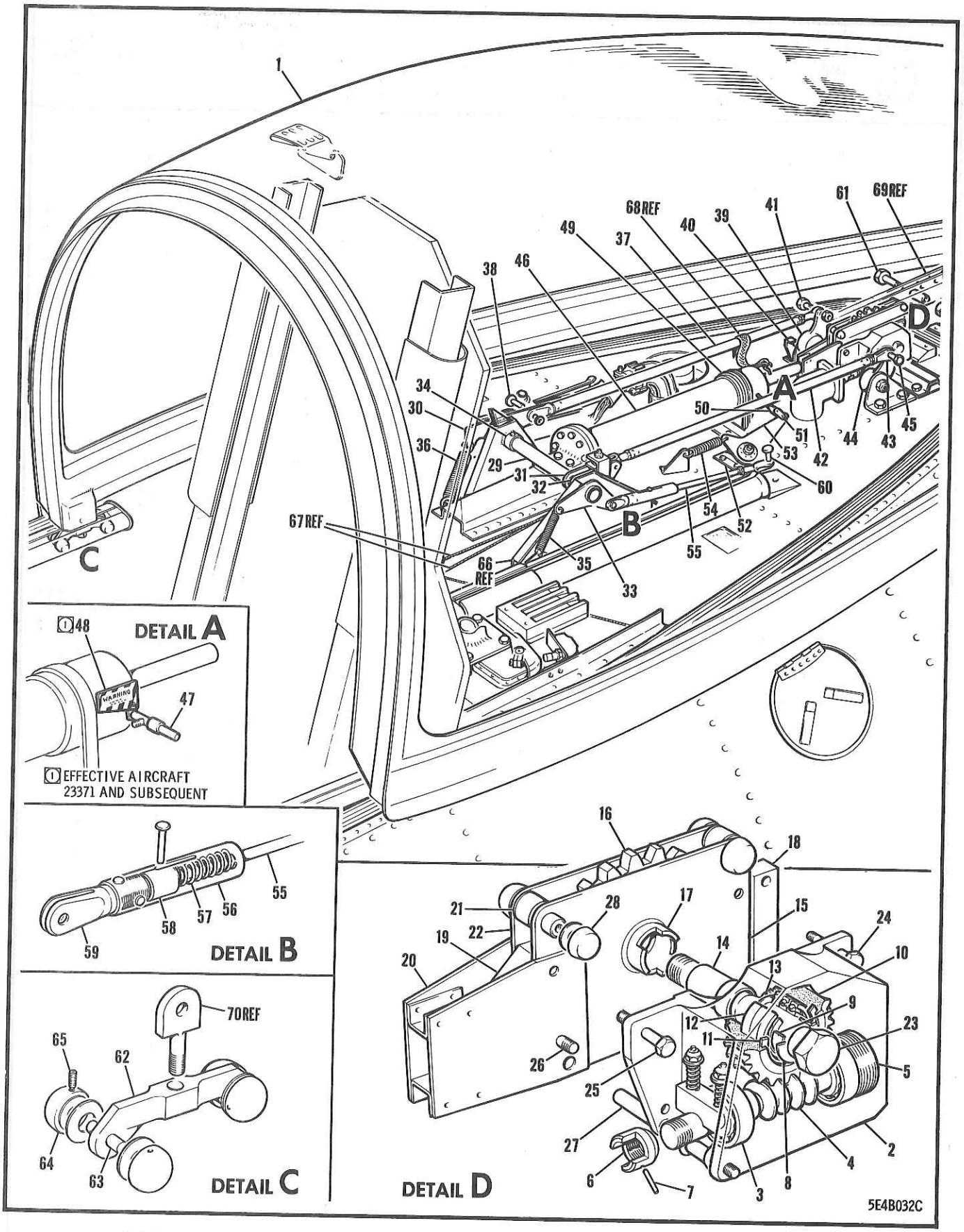

FIGURE 70 COCKPIT ENCLOSURE CANOPY & EMERGENCY RELEASE MECHANISM

FIGURE AND INDEX NUMBER	GROUP FUSELAGE MAJOR ASSEMBLY COCKPIT CANOPY & EMERGENCY RELEASE MECHANISM PART NUMBER	1234567 NOMENCLATURE	CODE	UNITS PER ASSY
70 -	152-31801-40	CANOPY INSTL - COCKPIT ENCL (SEE FIG. 68)		REF
	176-31801	CANOPY INSTL - COCKPIT ENCL (SEE FIG. 69)	371-	REF
- 1	152-31802-60	•CANOPY ASSY - COCKPIT COMPLETE SLIDING (SEE FIG. 71)		REF
	152-31818-30	•GEAR-BOX ASSY - COCKPIT ENCLOSURE CANOPY RELEASE MECHANISM	001-370	1
	176-31818	•GEAR-BOX ASSY - COCKPIT ENCLOSURE CANOPY RELEASE MECHANISM	371-	1
- 2	152-31819-10	••HOUSING - CANOPY GEAR-BOX		1
- 3	200-SFF	••BALL-BEARING - SINGLE-ROW DOUBLE-SHIELD (MRC)		1
		OR		
	200KDD	••BALL-BEARING - SINGLE-ROW DOUBLE-SHIELD (FBC)		
		OR		
	6200ZZ	••BEARING - (SKF) (DOUBLE-SHIELD)		
- 4	152-31822	••WORM - CANOPY GEAR-BOX		2
- 5	152-31831	••PLUG - CANOPY GEAR-BOX (WORM ARRESTING)		1
- 6	151-54351-10	••COUPLING - CANOPY ELEC ACTUATOR GEAR-BOX		1
- 7	151-54353-5	••PIN - CANOPY ELECTRICAL ACTUATOR COUPLING		1
- 8	2W1-50-32-10	••WASHER - PLAIN (NAA) (FOR ALIGNMENT)		1
	2W1-50-32-21	••WASHER - PLAIN (NAA) (FOR ALIGNMENT)		1
- 9	152-31832	••SPACER - CANOPY GEAR-BOX		1
	152-31821	••WORM-GEAR ASSY - CANOPY		1
-10	152-31821-3	•••WORM-GEAR - CANOPY MPI		1
-11	NAS50-118	•••RING -		1
-12	B539	•••BALL-BEARING - TORQUE TUBE EXTRA LIGHT DUTY SINGLE-ROW (FBC)		3
-13	2W1C60-37-10	•••WASHER - PLAIN (NAA)		AR
	2W1-50-32-21	••WASHER - PLAIN (NAA) (FOR ALIGNMENT)		1
	2W1-50-32-10	••WASHER - PLAIN (NAA) (FOR ALIGNMENT)		1
-14	152-31824	••SPACER - CANOPY GEAR-BOX		1
-15	152-31838-7	••PLATE ASSY - CANOPY GEAR-BOX INNER		1
	152-31838-5	•••PLATE - CANOPY GEAR-BOX INNER		1
	152-31823	•••BEARING - CANOPY GEAR-BOX		1
	152-31820	••GEAR ASSY - CANOPY GEAR-BOX SPUR		1
-16	152-31820-3	•••GEAR - CANOPY GEAR-BOX SPUR MPI		1
-17	B-1112X	•••NEEDLE-BEARING - DRAWN CUP (TOR)		1
	2W1-45-32-10	••WASHER - PLAIN (NAA)		AR
	2W1-45-32-21	••WASHER - PLAIN (NAA)		AR
-18	152-31828	••SPACER - CANOPY GEAR-BOX		1
-19	152-31827	••BLOCK - CANOPY GEAR-BOX GUN REACTION		1
-20	152-31826-10	••BRACKET ASSY - CANOPY GEAR-BOX		1
-21	152-31830	••PIN - CANOPY GEAR-BOX ROLLER (PRESS-FIT)		2
	2W1-25-20-32	••WASHER - PLAIN (NAA)		4
	2W1-25-20-10	••WASHER - PLAIN (NAA)		4
-22	152-31829-3	••PLATE - CANOPY GEAR-BOX (OUTER)		1
-23	152-31837	••BOLT - CANOPY GEAR-BOX CONNECTOR		1
	AN960-816	••WASHER -		1
	AN310-8	••NUT -		1
	AN380-3-3	••COTTER-PIN -	001-370	1
	AN381-3-12	••COTTER-PIN -	371-	1
-24	AN173-12A	••BOLT - (GEAR-BOX ATTACHING)	001-370	2
	AN173-13A	••BOLT - (GEAR-BOX ATTACHING)	371-	2
	AN960-10	••WASHER -		4
	AN365-1032	••NUT -		2
-25	AN173-14A	••BOLT - (GEAR-BOX ATTACHING)	001-371	1
	AN173-15A	••BOLT - (GEAR-BOX ATTACHING)	371-	1
	AN960-10	••WASHER -		3
	AN365-1032	••NUT -		1

FIGURE AND INDEX NUMBER	GROUP FUSELAGE MAJOR ASSEMBLY COCKPIT CANOPY & EMERGENCY RELEASE MECHANISM PART NUMBER	1234567 NOMENCLATURE	CODE	UNITS PER ASSY
70 -26	AN4-16A	••BOLT - (GEAR-BOX ATTACHING)		1
	AN960-416	••WASHER -		1
	AN365-1032	••NUT -		1
-27	161-31835	••BOLT - CANOPY GEAR-BOX SUPPORT	001-370	1
	176-31835	••BOLT - COCKPIT ENCL CANOPY GEAR-BOX SUP.	371-	1
	152-31818-5	••WASHER - CANOPY GEAR-BOX (MAKE FROM 2W1-16-20-63 (NAA))	001-370	1
	176-31818-3	••WASHER - CANOPY GEAR-BOX (MAKE FROM 2W1-16-20-63 (NAA))	371-	1
	2W1-16-20-63	••WASHER - PLAIN (NAA)		1
	161-31836	••NUT - CANOPY GEAR-BOX SUPPORT	001-370	1
	176-31836	••NUT - COCKPIT ENCL CANOPY GEAR-BOX SUP.	371-	1
	AN960-416	•WASHER - (MAXIMUM 2 EACH ROLLER)		AR
	AN960-416L	•WASHER - (MAXIMUM 2 EACH ROLLER)		AR
-28	140-31809-3	•ROLLER - CANOPY CTR & REAR TRACK ATTACHING		4
	152-318130-20	•TORQUE SHAFT ASSY - CANOPY RELEASE MECH (FOR UPPER CODE SEE FIG. 38)	001-370	1
-29	152-31848	••TORQUE SHAFT - CANOPY RELEASE MECHANISM	001-370	1
-30	151-31840	••BELL-CRANK ASSY - COCKPIT CANOPY REL MECH	001-370	1
-31	152-31886-20	••BELL-CRANK ASSY - CANOPY RELEASE MECH TORQUE SHAFT	001-370	1
	AN393-21	••PIN -	001-370	2
	AN380-2-2	••COTTER-PIN -	001-370	2
-32	152-31850-952	••BELL-CRANK ASSY - CANOPY REL MECHANISM TORQUE SHAFT	001-370	1
-33	152-31894-20	••BELL-CRANK ASSY - CANOPY REL MECHANISM TORQUE SHAFT	001-370	1
	AN393-25	••PIN -	001-370	1
	AN380-2-2	••COTTER-PIN -	001-370	1
-34	151-31826	•COLLAR - COCKPIT CANOPY REL MECH TORQUE	001-370	1
	AN393-21	•PIN -	001-370	1
	AN960-10L	•WASHER -	001-370	1
	AN380-2-2	•COTTER-PIN -	001-370	1
-35	134-48239	•SPRING - WING COMBAT FUEL TANK RETAINER HOOK ARM	001-370	1
-36	151-31849	•SPRING - COCKPIT CANOPY RELEASE MECHANISM	001-370	1
-37	152-31871-23	•ROD ASSY - CANOPY RELEASE MECHANISM RH (FOR UPPER CODE SEE FIG. 38)	001-370	1
	152-31871-17	••ROD ASSY - CANOPY RELEASE MECHANISM	001-370	1
	152-31871-21	•••TUBE - CANOPY RELEASE MECHANISM ROD	001-370	1
	1R8P428	•••ROD-END - THREADED (NAA)	001-370	1
	152-318123	•••CLEVIS - CANOPY RELEASE MECHANISM ROD	001-370	1
	F34-14	••ROD-END - UNIBAL SPHERICAL BEARING (HEC)	001-370	1
	AN316-4R	••CHECK-NUT -	001-370	1
-38	AN393-9	•PIN -	001-370	1
	AN960-10L	•WASHER -	001-370	1
	AN380-2-2	•COTTER-PIN -	001-370	1
-39	152-31884-20	•BELL-CRANK ASSY - CANOPY GEAR-BOX LATCH MPI (STARBOARD SIDE)	001-370	1
-40	151-31824	•STOP - COCKPIT CANOPY GEAR-BOX LATCH (STARBOARD SIDE)	001-370	1
	AN960-416	•WASHER -	001-370	2
	2W1C25-40-16	•WASHER - PLAIN (NAA)	001-370	1
	AN310-4	•NUT -	001-370	1
	AN380-2-2	•COTTER-PIN -	001-370	1
-41	AN3-7	•BOLT - (ROD TO BELL-CRANK ATTACHING)	001-370	1
	AN960-10	•WASHER -	001-370	1
	AN310-3	•NUT -	001-370	1
	AN380-2-2	•COTTER-PIN -	001-370	1
-42	152-31871-25	•ROD ASSY - CANOPY RELEASE MECHANISM (PORT) (FOR UPPER CODE SEE FIG. 38)	001-370	1

FIGURE AND INDEX NUMBER	GROUP FUSELAGE MAJOR ASSEMBLY COCKPIT CANOPY & EMERGENCY RELEASE MECHANISM PART NUMBER	1234567 NOMENCLATURE	CODE	UNITS PER ASSY
70 -	152-31871-15	••ROD ASSY - CANOPY RELEASE MECH (PORT)	001-370	1
	152-31871-19	•••TUBE - CANOPY RELEASE MECHANISM	001-370	1
-43	1R8P428	•••ROD-END - THREADED (NAA)	001-370	1
	AN486-4	••CLEVIS -	001-370	1
	AN316-4R	••CHECK-NUT -	001-370	1
	AN393-11	•PIN -	001-370	1
	AN960-10L	•WASHER -	001-370	1
	AN380-2-2	•COTTER-PIN -	001-370	1
-44	152-31883	•BELL-CRANK ASSY - CANOPY GEAR-BOX LATCH MPI (PORT SIDE)	001-370	1
	2W1C25-40-16	•WASHER - PLAIN (NAA)	001-370	2
	AN960-416	•WASHER -	001-370	1
	AN310-4	•NUT -	001-370	1
	AN380-2-2	•COTTER-PIN -	001-370	1
-45	AN23-10	•BOLT -	001-370	1
	AN960-10	•WASHER -	001-370	1
	AN320-3	•NUT -	001-370	1
	AN380-2-2	•COTTER-PIN -	001-370	1
-46	TYPE CLX11-1	•REMOVER - CANOPY (G•F•E•)	371-574	1
	TYPE M1A2	•REMOVER - CANOPY (G•F•E•)	575-	1
	13B-79031	•REMOVER - CANOPY EJECTION SYSTEM TYPE M1A1	001-574	1
-47	BLX-7752	•EXACTOR - CANOPY JETTISON SYSTEM TYPE M1	575-	1
	13B-79030	•EXACTOR - CANOPY JETTISON SYSTEM TYPE M1A1 OR		
	BLX-7752	•EXACTOR - CANOPY JETTISON SYSTEM TYPE M1		
-48	13A-83024	•NAME-PLATE - COCKPIT ENCLOSURE CANOPY EXACTOR WARNING (AS PER EO 05-5E-6 A/118)	371-	1
-49	170-31872	•U-BOLT ASSY - CANOPY REMOVER REAR SUPPORT	001-370	1
	170-31872-3	••U-BOLT - CANOPY REMOVER REAR SUPPORT	001-370	1
	170-31872-5	••EXTRUSION - CANOPY REMOVER U-BOLT RUBBER	001-370	1
	AN960-10L	•WASHER -	001-370	2
	AN365-1032	•NUT -	001-370	2
-50	170-31847	•PIN - COCKPIT CANOPY REMOVER MPI	001-370	1
-51	152-31845	•LINK - CANOPY REMOVER	001-370	2
	AN392-11	•PIN -	001-370	1
	2W1-8-8-63	•WASHER - PLAIN (NAA)	001-370	1
	AN380-2-2	•COTTER-PIN -	001-370	1
-52	152-31843	•BRACKET - CANOPY REMOVER GUN BELL-CRANK	001-370	1
	AN3-4A	•BOLT -	001-370	4
	AN960-10L	•WASHER -	001-370	4
	AN365-1032	•NUT -	001-370	4
-53	152-31844	•BELL-CRANK ASSY - CANOPY REMOVER	001-370	1
	AN174-10	•BOLT -	001-370	1
	AN960-416	•WASHER -	001-370	1
	AN310-4	•NUT -	001-370	1
-54	134-48239	•SPRING - WING COMBAT FUEL TANK RETAINING HOOK ARM	001-370	1
	AN393-11	•PIN -	001-370	1
	AN960-10	•WASHER -	001-370	1
	AN380-2-2	•COTTER-PIN -	001-370	1
	151-31859	•ROD ASSY - COCKPIT CANOPY REMOVER RELEASE	001-370	1
-55	151-31859-3	••ROD - CANOPY REMOVER REL CABLE (TAKE-UP)	001-370	1
-56	152-318121-3	••CASE - CANOPY REMOVER REL CABLE (TAKE-UP)	001-370	1
-57	152-31879	••SPRING - CANOPY REMOVAL RELEASE CABLE	001-370	1
-58	152-318122-3	••PLUNGER - CANOPY REMOVER RELEASE CABLE	001-370	1
	AN392-19	••PIN -	001-370	1
	AN960-10L	••WASHER -	001-370	1
	AN380-2-1	••COTTER-PIN -	001-370	1
-59	152-318123	••CLEVIS - CANOPY RELEASE MECHANISM ROD	001-370	1

FIGURE AND INDEX NUMBER	GROUP FUSELAGE MAJOR ASSEMBLY COCKPIT CANOPY & EMERGENCY RELEASE MECHANISM PART NUMBER 1234567 NOMENCLATURE	CODE	UNITS PER ASSY
70 -	AN316-4R	••CHECK-NUT -	001-370 1
	AN486-4	••CLEVIS -	001-370 1
	AN393-11	•PIN -	001-370 1
	AN960-10L	•WASHER -	001-370 1
	AN380-2-2	•COTTER-PIN -	001-370 1
-60	AN393-7	•PIN -	001-370 1
	AN960-10L	•WASHER -	001-370 1
	AN380-2-2	•COTTER-PIN -	001-370 1
-61	AN3-25A	•BOLT - (TRACK ASSY STOP)	001-370 1
	4S3-10-64	•SPACER - BOLT (NAA)	001-370 1
	AN365-1032	•NUT -	001-370 1
	151-31815	•TRUCK ASSY - CANOPY FORWARD	001-370 2
-62	151-31815-3	••TRUCK - CANOPY FORWARD	001-370 1
-63	117-31825-9	••PIN - COCKPIT ENCL CANOPY TRUCK ROLLER	001-370 2
	2W1-20-18-16	•WASHER - PLAIN (NAA)	001-370 AR
	152-31809-7	•ROLLER ASSY - CANOPY INTERMEDIATE TRUCK	001-370 8
-64	152-31809-5	••ROLLER - CANOPY INTERMEDIATE TRUCK	001-370 1
	4B16RF4-12	••BEARING - SINTERED OIL IMPREGNATED (NAA)	001-370 1
-65	AN565A2-4	•SCREW - (ROLLER TO TRUCK ATTACHING)	001-370 8
	2W1-20-20-64	•WASHER - PLAIN (NAA) (MAXIMUM 2)	001-370 AR
	AN960-416L	•WASHER - (MAXIMUM 2)	001-370 2
	AN310-4	•NUT -	001-370 2
	AN380-2-3	•COTTER-PIN -	001-370 2
-66	152-31841-20	BRACKET ASSY - CANOPY REL MECH TORQUE SHAFT (SEE FIG. 38)	REF
-67	152-318106	CABLE ASSY - CANOPY EMERGENCY REAR RELEASE (SEE FIG. 68)	REF
-68	13A-86005-4	SAFETY-PIN ASSY - COCKPIT CANOPY REMOVER (SEE SECTION 6)	REF
-69	152-31806-10	TRACK ASSY - CANOPY REAR (SEE FIG. 71)	REF
-70	170-31838	EYE-BOLT - COCKPIT CANOPY FORWARD TRUCK MPI (SEE FIG. 71)	REF
		(CONTINUED SEE SECTION 14)	

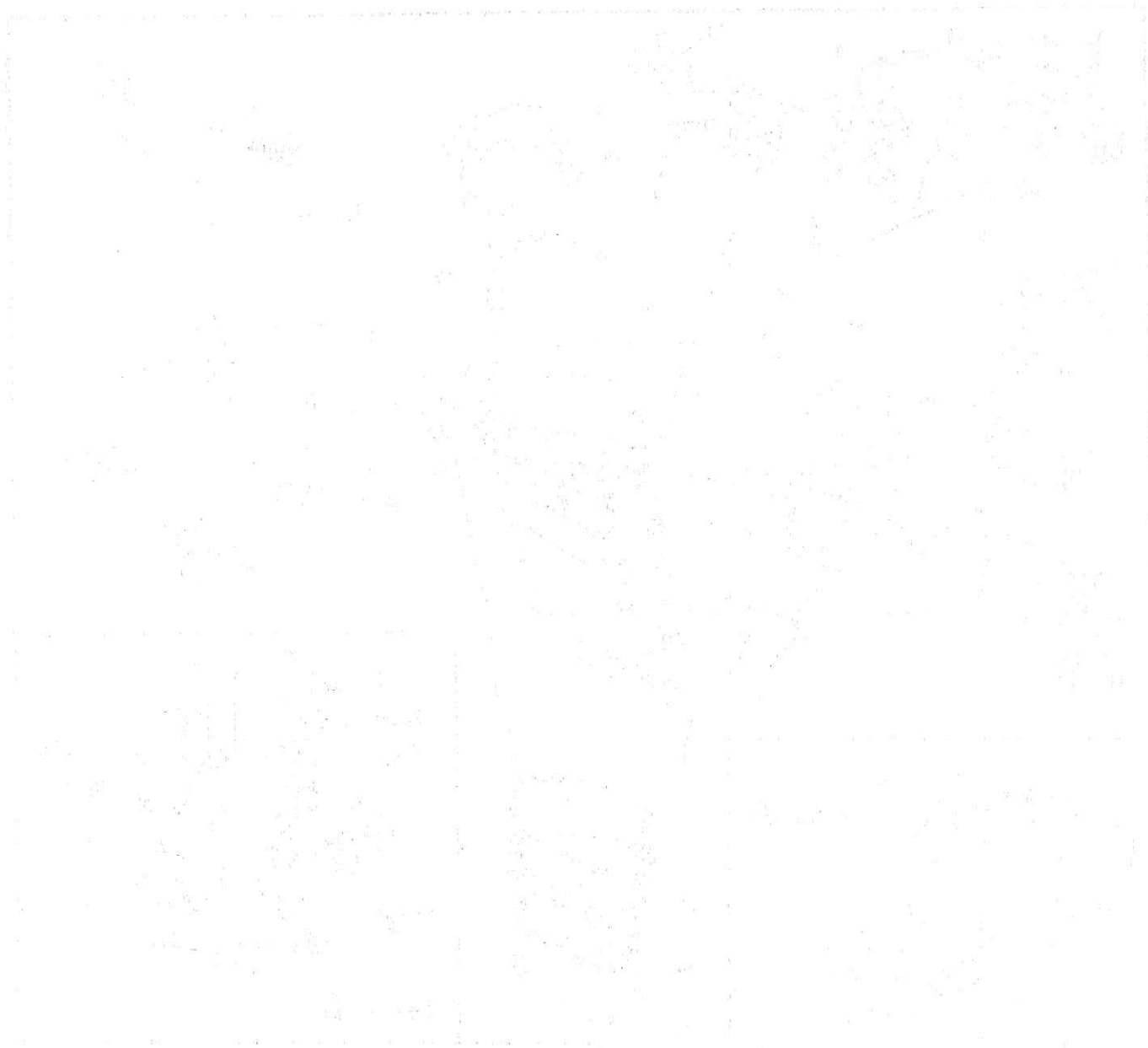

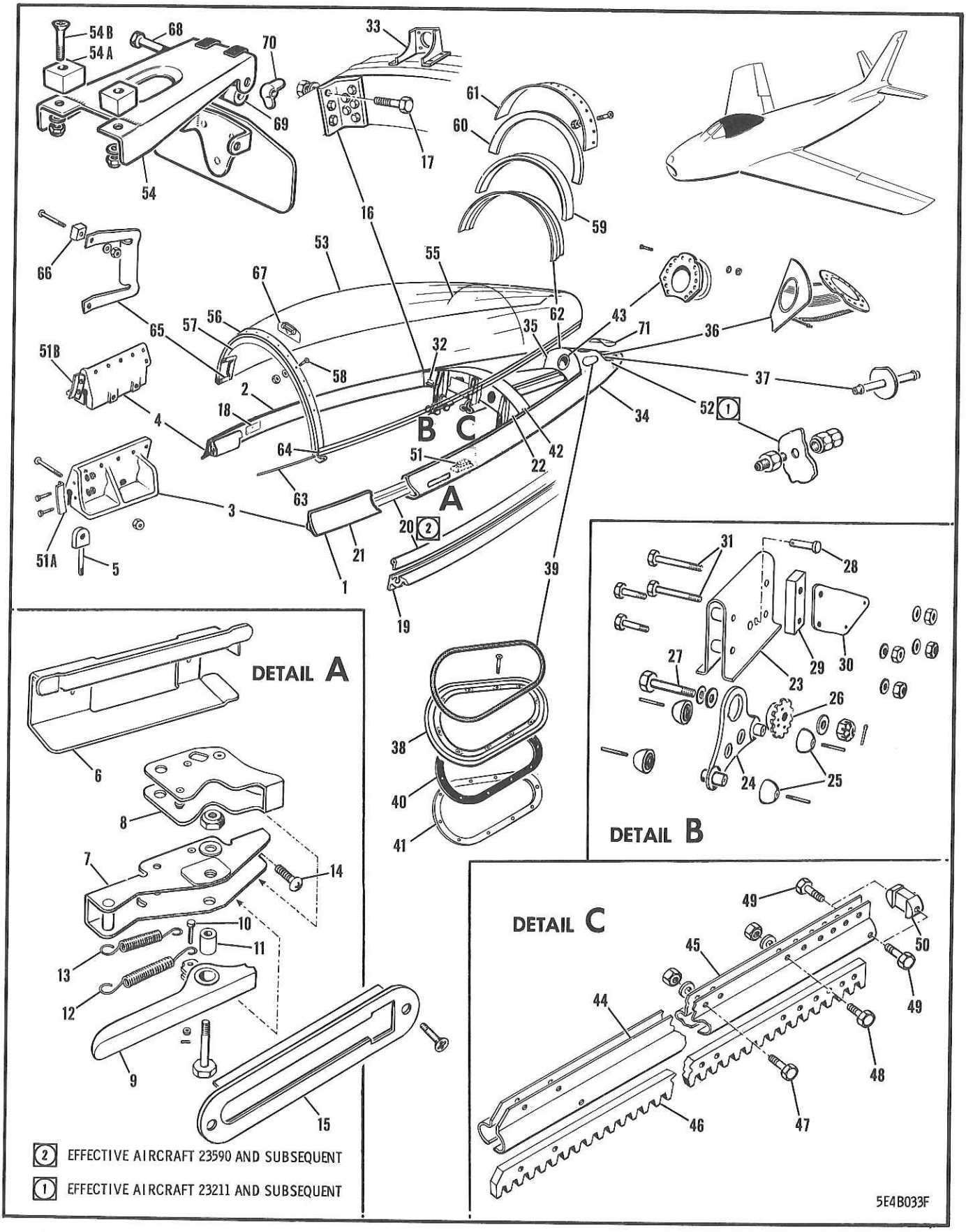

FIGURE 71 COCKPIT ENCLOSURE SLIDING CANOPY

FIGURE AND INDEX NUMBER	GROUP / MAJOR ASSEMBLY / PART NUMBER	FUSELAGE / COCKPIT ENCLOSURE SLIDING CANOPY / 1234567 NOMENCLATURE	CODE	UNITS PER ASSY
71 -	152-31802-60	CANOPY ASSY - COCKPIT ENCLOSURE COMPLETE SLIDING (SEE FIG. 70)	001-210	1
	152-31802-803	CANOPY ASSY - COCKPIT ENCL COMPLETE SLIDING	211-370	1
	152-31802-805	CANOPY ASSY - COCKPIT ENCL COMPLETE SLIDING	371-686	1
	152-31802-807	CANOPY ASSY - COCKPIT ENCL COMPLETE SLIDING	687-	1
	152-31803-500	.FRAME ASSY - CANOPY	001-210	1
	152-31803-800	.FRAME ASSY - CANOPY	211-370	1
	152-31803-805	.FRAME ASSY - CANOPY	371-686	1
	152-31803-807	.FRAME ASSY - CANOPY	687-	1
	152-31802-960	.SPARE PART ASSY FOR 152-31802-500 & -800 & -805 & -807		
- 1	152-31803-107	..FRAME ASSY - CANOPY PORT SIDE		1
- 2	152-31803-108	..FRAME ASSY - CANOPY STARBOARD SIDE		1
- 3	140-31811-9	...FITTING ASSY - CANOPY FWD TRUCK ATT PORT		1
- 4	140-31811-10	...FITTING ASSY - CANOPY FWD TRUCK ATT STBD		1
- 5	170-31838	....EYE-BOLT - COCKPIT CANOPY FWD TRUCK MPI		1
	140-31811-950	....SHIM - (EYE-BOLT PACKING)		1
	NAS222-20	....SCREW - (EYE-BOLT TO FITTING ATTACHING)		1
	AN960-516	....WASHER -	491-	1
	AN365-428	....NUT -	001-490	1
	22A27-22-048	....NUT - FLOATING RIGHT ANGLE ANCHOR (ESN)	491-	1
- 6	151-31843-9	...CHANNEL ASSY - CANOPY HANDLE SUP. PORT		1
	151-31843-10	...CHANNEL ASSY - CANOPY HANDLE SUP. STBD		1
	151-31844-1	...HANDLE ASSY - COCKPIT ENCL CANOPY PORT		1
	151-31844-2	...HANDLE ASSY - COCKPIT ENCL CANOPY STBD		1
- 7	151-31844-3	....CHANNEL ASSY - CANOPY HANDLE		1
- 8	151-31844-5	....LATCH ASSY - CANOPY HANDLE		1
- 9	151-31845	....HANDLE - COCKPIT ENCLOSURE CANOPY		1
-10	AN392-13	....PIN -		1
	2W1-8-8-32	....WASHER - PLAIN (NAA)		1
	AN380-2-1	....COTTER-PIN -		1
-11	4B19S3-029	....BUSHING - PLAIN PRESS-FIT (NAA)		1
	AN3-13A	....BOLT - (HANDLE & LATCH TO CHANNEL ATT)		1
	AN960D10L	....WASHER -		1
	AN364-1032	....NUT -		1
-12	151-31830	....SPRING - COCKPIT ENCL CANOPY HANDLE		1
-13	151-31831	....SPRING - CKPT ENCL CANOPY HANDLE LATCH		1
-14	AN526-1032R14	...SCREW - (CHANNEL ATTACHING)		2
	AN960D10	...WASHER -		2
	2W1-13-24-40	...WASHER - PLAIN (NAA)		20
-15	151-31847-1	...COVER ASSY - CANOPY HANDLE PORT SIDE		1
	151-31847-2	...COVER ASSY - CANOPY HANDLE STBD SIDE		1
	AN509-10R8	...SCREW - (COVER ATTACHING)		2
	152-31891-1	...ANGLE - CANOPY CROSS-BEAM FORWARD PORT		1
-16	152-31891-2	...ANGLE - CANOPY CROSS-BEAM FORWARD STBD		1
	152-31890-1	...ANGLE - CANOPY CROSS-BEAM REAR PORT SIDE (MAKE FROM 1E121 X 3-1/8 (NAA))		1
	152-31890-2	...ANGLE - CANOPY CROSS-BEAM REAR STBD SIDE (MAKE FROM 1E121 X 3-1/8 (NAA))		1
	AAF84-5A	...BOLT - AIRCRAFT CLOSE TOLERANCE - 1/4-28 (ANGLE TO FRAME ATTACHING)		14
	AN960-416	...WASHER -		14
	AN365-428	...NUT -		14
-17	AAF83-5A	...BOLT - AIRCRAFT CLOSE TOLERANCE - 1/4-28 (ANGLE TO FRAME ATTACHING)		2
	AN960-10	...WASHER -		2
	AN365-1032	...NUT -		2
-18	13-86018-950	...NAME-PLATE - TAKE-OFF & LANDING SPEED (STBD) (AS PER EO 05-5E-6A/9)	001-370	1
	13-86018-800	...NAME-PLATE - TAKE-OFF & LANDING SPEED (STBD) (AS PER EO 05-5E-6B/9)	371-	1
	AN530-4R6	...SCREW - (AS PER EO 05-5E-6A/9) (NAME-PLATE ATTACHING)		4

FIGURE AND INDEX NUMBER	GROUP FUSELAGE MAJOR ASSEMBLY COCKPIT ENCLOSURE SLIDING CANOPY PART NUMBER	1234567 NOMENCLATURE	CODE	UNITS PER ASSY
71 -	AN960D4	•••WASHER - (AS PER EO 05-5E-6A/9)		16
	AN7510-1	•••PLATE - (STARBOARD SIDE)		1
	AN535-4-5	•••SCREW - (PLATE ATTACHING) (STARBOARD)		4
-19	152-31803-61	•••EXTRUSION - CANOPY FRAME PORT SIDE (MAKE FROM 6E111X72 (NAA))		1
	152-31803-62	•••EXTRUSION - CANOPY FRAME STARBOARD SIDE (MAKE FROM 6E111X70 (NAA))		1
-20	152-31803-955	•••SPACER - CANOPY FRAME	590-	1
-21	152-31803-33	•••SKIN - CANOPY FRAME PORT SIDE		1
	152-31803-34	•••SKIN - CANOPY FRAME STARBOARD SIDE		1
	13B-50031	••NAME-PLATE - CKT/BKR PANEL REAR (PORT) (AS PER EO 65-5E-6A/184)	737-	1
	NAS42DD4-6	••SPACER -		9
	AN530-2R6	••SCREW - (NAME-PLATE ATTACHING)		9
	13B-50032	••NAME-PLATE - CIRCUIT-BREAKER PANEL STBD (AS PER EO 05-5E-6A/184)	737-	1
	NAS42DD4-6	••SPACER -		6
	AN530-4R6	••SCREW - (NAME-PLATE ATTACHING)	737-	6
-22	152-31804-40	••CROSS-BEAM ASSY - CANOPY	001-370	1
	152-31804-800	••CROSS-BEAM ASSY - CANOPY	371-	1
	152-31804-30	•••WELD ASSY - CANOPY ROLLER TRUCK CROSS-BEAM		2
-23	152-31804-17	••••RETAINER - CANOPY ROLLER TRUCK CROSS-BEAM		1
	152-31808	•••TRUCK ASSY - CANOPY INTERMEDIATE		2
-24	152-31813	••••PLATE ASSY - CANOPY INTERMEDIATE TRUCK		1
	117-31825	•••••PIN - COCKPIT ENCL CANOPY TRUCK ROLLER		2
-25	152-31809-7	••••ROLLER ASSY - CANOPY INTERMEDIATE TRUCK		4
	152-31809-5	•••••ROLLER - CANOPY INTERMEDIATE TRUCK		1
	4B16BF4-12	•••••BEARING - SINTERED OIL IMPG (NAA)		1
	AN565A2-4	••••SCREW - (ROLLER TO PLATE ATTACHING)		4
-26	151-31814	•••INSERT - CANOPY ADJUSTING BUSHING		2
-27	AAF85-11	•••BOLT - AIRCRAFT CLOSE TOL - 5/16-24 (BUSHING TO TRUCK ATTACHING)		2
	2W1AL22-24-32	•••WASHER - PLAIN (NAA)		4
	AN960-516	•••WASHER -		2
	AN310-5	•••NUT -		2
	AN380-2-3	•••COTTER-PIN -		2
-28	AN392-21	•••PIN -	001-200	2
	AN392-23	•••PIN -	201-	2
	2W1-8-8-31	•••WASHER - PLAIN (NAA)	001-200	2
	2W1-8-10-31	•••WASHER - PLAIN (NAA)	201-	2
	2W1-8-10-63	•••WASHER - PLAIN (NAA)	201-	2
	AN380-2-1	•••COTTER-PIN -		2
-29	151-54089	•••SPACER - CANOPY OPEN LIMIT SWITCH SUP. (ELECTRICAL) (STARBOARD)		1
-30	151-54088	•••SUPPORT - CANOPY OPEN LIMIT SWITCH CAM (ELECTRICAL) (STARBOARD)		1
	4S3-10-12	•••SPACER - BOLT (NAA)		8
-31	AN173-15A	•••BOLT - (RETAINER ATTACHING)		2
	AN173-11A	•••BOLT - (RETAINER ATTACHING)		6
	AN960-10	•••WASHER -		8
	AN365-1032	•••NUT -		8
-32	NAS45-6-1	•••PANEL ASSY -		1
	AN515-4R7	•••SCREW - (PANEL TO FRAME ATTACHING)		2
	AN365-440	•••NUT -		2
	AN936A6	•••LOCK-WASHER -		1
	AN960-6	•••WASHER -		1
	AN340-6	•••NUT -		1
-33	161-54049	••BRACKET - CANOPY ELEC QUICK DISCONN PLUG		1

FIGURE AND INDEX NUMBER	GROUP / MAJOR ASSEMBLY / PART NUMBER	FUSELAGE / COCKPIT ENCLOSURE SLIDING CANOPY / 1234567 NOMENCLATURE	CODE	UNITS PER ASSY
71 -34	152-31803-123	••FRAME ASSY - CANOPY REAR	001-686	1
	152-31803-823	••FRAME ASSY - CANOPY REAR	687-	1
-35	152-31814-20	•••BULKHEAD ASSY - CANOPY FORWARD		1
-36	172-53411	•••DUCT ASSY - HEAT & VENT SYS RGLR EXHAUST		1
	152-31817	•••BULKHEAD ASSY - CANOPY REAR	001-210	1
	152-31817-800	•••BULKHEAD ASSY - CANOPY REAR	211-370	1
	152-31817-10	•••BULKHEAD ASSY - CANOPY REAR	371-	1
-37	152-53408	••••TUBE ASSY - HEAT & VENT SYSTEM CABIN PRESSURE REGULATOR DRAIN		1
-38	152-31803-51	•••DOOR - CANOPY REAR FRAME INSPECTION	001-686	1
	152-31803-851	•••DOOR - CANOPY REAR FRAME INSPECTION	687-	1
-39	152-318113	•••TUBE - CANOPY INSPECTION WINDOW		1
-40	152-31803-57	•••GASKET - CANOPY REAR FRAME INSP WINDOW		1
-41	152-31803-59	•••RING - CANOPY REAR FRAME INSP WINDOW		1
	AN507-1032R16	•••SCREW -		10
-42	152-31892	•••COVER - CANOPY FRONT CROSS-BEAM	001-370	1
	152-31892-800	•••COVER - CANOPY FRONT CROSS-BEAM	371-	1
-43	172-53401	•••ADAPTER - HEAT & VENT SYS PRESS. RGLR		1
	AN515-8R10	•••SCREW - (ADAPTER TO FRAME ATTACHING)		8
	AN515-8R12	•••SCREW - (ADAPTER TO FRAME ATTACHING)		2
	AN515-8R13	•••SCREW - (ADAPTER TO FRAME ATTACHING)		4
	AN960D8	•••WASHER -		14
	AN365-832	•••NUT -		14
	152-31806-10	••TRACK ASSY - CANOPY REAR	001-370	1
	152-31806-20	••TRACK ASSY - CANOPY REAR	371-	1
-44	152-31815-1	•••TRACK - CANOPY REAR LH	001-370	1
	152-31815-11	•••TRACK - CANOPY REAR LH	371-	1
-45	152-31815-2	•••TRACK - CANOPY REAR RH	001-370	1
	152-31815-12	•••TRACK - CANOPY REAR RH	371-	1
-46	152-31816	•••RACK - CANOPY REAR TRACK	001-370	1
	152-31816-10	•••RACK - CANOPY REAR TRACK	371-	1
-47	AN3-12A	••BOLT - (TRACK TO FRAME ATTACHING)		4
-48	AN3-11A	••BOLT - (TRACK TO FRAME ATTACHING)		6
	AN960-10	••WASHER -		10
	AN365-1032	••NUT -		10
-49	AN3-5A	••BOLT - (TRACK STOP)	001-370	2
	AN960C10	••WASHER -	001-370	4
	AN365-1032	••NUT -	001-370	2
-50	176-31827	••STOP - COCKPIT ENCLOSURE FUSELAGE STA 161 CANOPY GEAR-BOX	371-	1
	AN5H11A	••BOLT - (TRACK STOP ATTACHING)	371-	2
	AN960D516	••WASHER -		2
	172-31816-1	••FITTING - CANOPY REAR TRACK TO FORWARD BULKHEAD SUP. PORT SIDE		1
	172-31816-2	••FITTING - CANOPY REAR TRACK TO FORWARD BULKHEAD SUP. STARBOARD SIDE		1
-51	170-31839-10	••SHOE - COCKPIT CANOPY RETAINING MPI		2
	172-31842	••PLATE - COCKPIT CANOPY RETAINING SHOE		2
	AN4-10A	••BOLT - (SHOE & PLATE ATTACHING) OR		4
	AN4-11A	••BOLT - (SHOE & PLATE ATTACHING)		
	AN960C416L	••WASHER -		4
-51A	152-31802-33	•ANGLE -		1
-51B	152-31802-34	•ANGLE -		1
-52	151-53567	•FITTING ASSY - HEAT & VENT SYSTEM STATIC LINE FILTER	211-	1
	152-31812-800	•GLASS ASSY - CANOPY (AS PER EO 05-5E-6A/7)	001-686	1
	152-31812-801	•GLASS ASSY - CANOPY OR	687-	1
	152-31812-803	•GLASS ASSY - CANOPY (WITH 152-31812-951 & 152-31812-957)		
-53	152-31812-3	••GLASS - CANOPY		1

FIGURE AND INDEX NUMBER	GROUP / MAJOR ASSEMBLY / PART NUMBER	FUSELAGE / COCKPIT ENCLOSURE SLIDING CANOPY / 1234567 NOMENCLATURE	CODE	UNITS PER ASSY
71 -54	13B-82001	••BRACKET ASSY - CANOPY GLASS (AS PER EO 05-5E-6A/229)		1
-54A	K13-114-2	••SPACER - (AS PER EO 05-5E-6A/229)		2
	K13-114-4	••SPACER - (AS PER EO 05-5E-6A/229)		AR
-54B	7S16-10-25	••SCREW - (BRACKET TO CANOPY ATTACHING) (AS PER EO 05-5E-6A/229)		2
	AN365B1032	••NUT -		2
	AN960D10	••WASHER		2
-55	151-71026-800	••WIRE ASSY - RADIO COMPASS SENSE ANTENNA (AS PER EO 05-5E-6A/7)		1
	173-71029	•••TERMINAL ASSY - ARN-6 COMPASS SENSE ANT• LEAD-IN (AS PER EO 05-5E-6A/7)		1
	152-31802-27	•STRIP - (CANOPY GLASS FRAME)		2
-56	152-31802-23	•EXTRUSION - (CANOPY GLASS FRAME) (MAKE FROM 6E575 X 55 (NAA))		1
-57	152-31802-45	•ZED - (CANOPY GLASS FRAME)		1
-58	AN509P10R16	•SCREW - (ZED & EXTRUSION ATTACHING)	001-686	20
	7S16-10-16	•SCREW - 100-DEG CRE FLUSH HEAD (NAA) (ZED & EXTRUSION ATTACHING)	687-	20
	AN960D10	•WASHER -	001-686	18
	AF955-3	•WASHER - BALL SEAT	687-	20
	AN365B1032	•NUT -		20
-59	152-31802-7	•SEAL - COCKPIT ENCL SLIDING CANOPY REAR	687-	1
-60	152-31802-29	•SEAL - COCKPIT ENCL SLIDING CANOPY REAR		1
-61	152-31802-21	•RETAINER - COCKPIT ENCL SLIDING CANOPY		1
-62	152-31802-39	•SEAL - COCKPIT ENCL SLIDING CANOPY REAR	001-589	1
	152-31802-953	•SEAL - COCKPIT ENCLOSURE SLDG CANOPY REAR	590-	1
	152-31802-957	•SPACER - COCKPIT ENCL SLIDING CANOPY REAR (MAKE FROM S-4501X22 (CAN))	590-	1
	AN507-1032R8	•SCREW - (SEAL RETAINER ATTACHING)		15
	AN960-10L	•WASHER -		15
	AN365-1032	•NUT -		15
-63	152-31802-25	•ROD - COCKPIT ENCL SLIDING CKPT GLASS ATT		2
-64	152-31802-37	•SEAL - COCKPIT ENCLOSURE SLIDING CANOPY	001-589	2
	152-31802-951	•SEAL - COCKPIT ENCLOSURE SLIDING CANOPY	590-	1
-65	151-31810	•HANDLE - CANOPY MANUAL OPENING (STBD SIDE)		1
-66	152-31802-43	•BLOCK - COCKPIT ENCL SLIDING CANOPY MANUAL OPENING HANDLE		2
	AN509P10R26	•SCREW - (BLOCK TO HANDLE ATTACHING)	001-686	2
	7S16-10-26	•SCREW - 100-DEG CRE FLUSH HEAD (NAA) (BLOCK TO HANDLE ATTACHING)	687-	2
	AN960-10L	•WASHER -		2
-67	AF45B7509	•MIRROR - REAR VISION		1
-68	AN3-37A	•BOLT - (MIRROR TO BRACKET ATTACHING) OR		1
	AN3-35A	•BOLT -		
	AN936A10	•WASHER - (AS PER EO 05-5E-6A/156)		1
-69	4S3-10-96	•SPACER - BOLT (NAA)		1
	AN935-10L	•WASHER - (AS PER EO 05-5E-6A/156)		2
	AN960-10L	•WASHER -	663-	AR
	AN960-10	•WASHER -	663-	AR
-70	AN350-1032	•NUT -		1
-71	140-54010	•LENS - FUSELAGE UPPER POSITION LIGHT	001-370	1
	AN507-832-8	•SCREW - (LENS ATTACHING)	001-370	4
	2W1-13-24-40	•WASHER - PLAIN (NAA)	001-370	4
	AN365-832	•NUT -	001-370	4

-000-

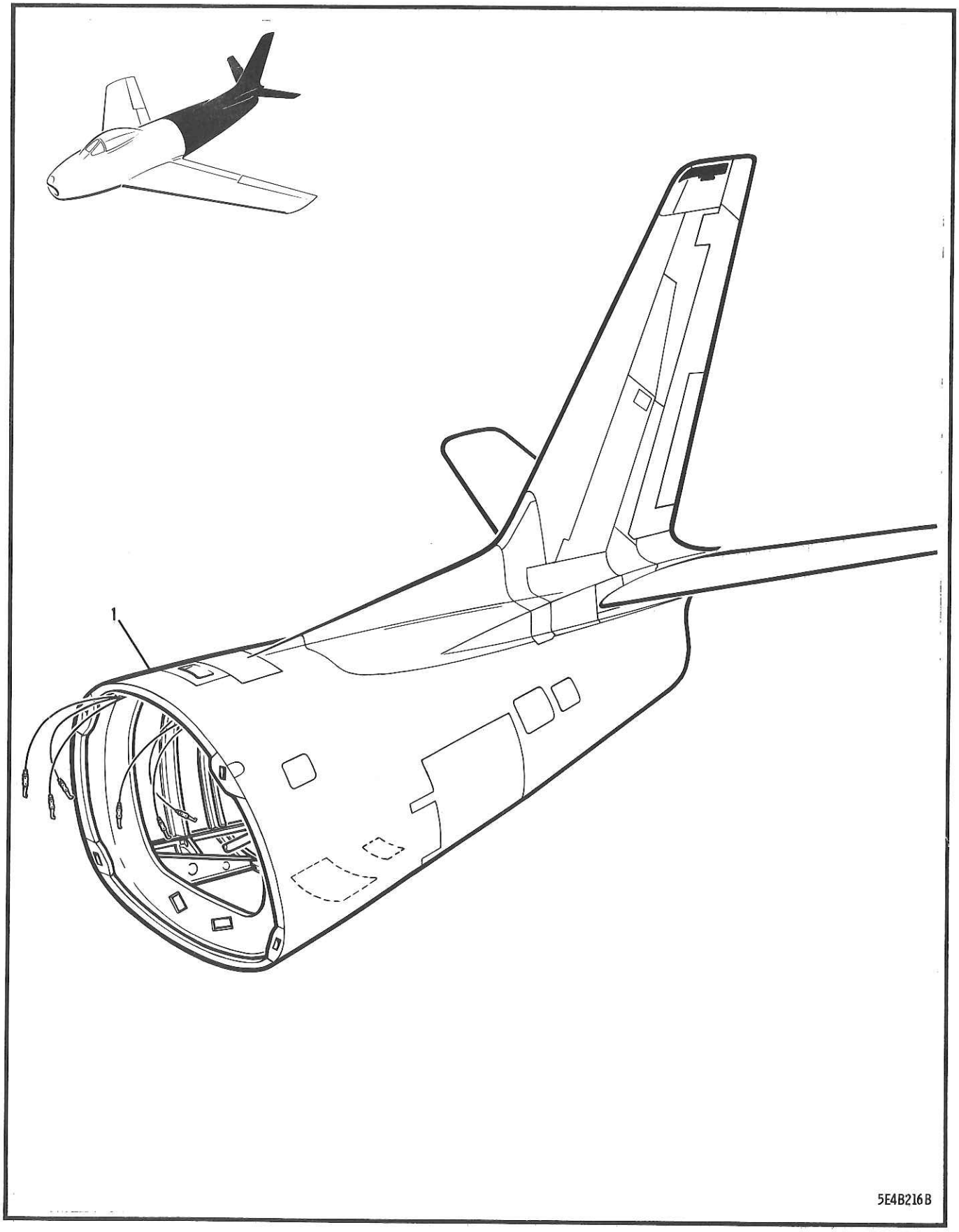

FIGURE 72 SABRE 5, 5A & 6 REAR FUSELAGE SPARES

FIGURE AND INDEX NUMBER	GROUP FUSELAGE MAJOR ASSEMBLY SABRE 5, 5A & 6 REAR FUSELAGE SPARES		CODE	UNITS PER ASSY
	PART NUMBER	1234567 NOMENCLATURE		
72 - 1	13A-00001-802	SPARE PART ASSY FOR REAR FUSELAGE (SABRE 5) (SEE FIG. 1)	001-030	
	13A-00001-814	SPARE PART ASSY FOR REAR FUSELAGE (SABRE 5)	031-100	
	13A-00001-816	SPARE PART ASSY FOR REAR FUSELAGE (SABRE 5)	101-200	
	13A-00001-818	SPARE PART ASSY FOR REAR FUSELAGE (SABRE 5)	201-210	
	13A-00001-820	SPARE PART ASSY FOR REAR FUSELAGE (SABRE 5)	211-300	
	13A-00001-822	SPARE PART ASSY FOR REAR FUSELAGE (SABRE 5) (SEE FIG. 1)	301-370	
	13B-00001-830	SPARE PART ASSY FOR REAR FUSELAGE (SABRE 6)	371-410	
	13B-00001-832	SPARE PART ASSY FOR REAR FUSELAGE (SABRE 6)	411-	
		-000-		

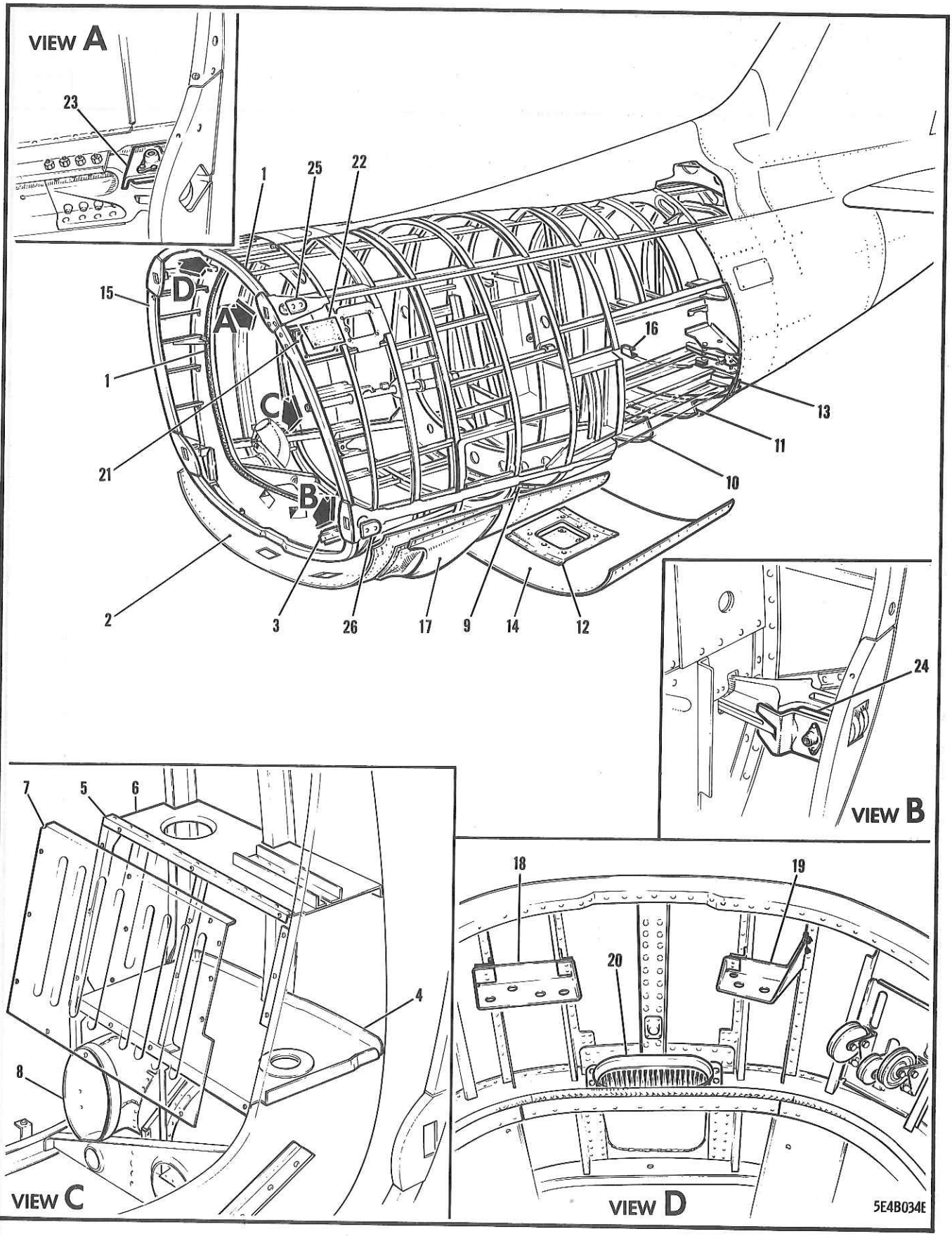

FIGURE 73 COMPLETE REAR SECTION FUSELAGE

FIGURE AND INDEX NUMBER	GROUP FUSELAGE MAJOR ASSEMBLY COMPLETE REAR SECTION FUSELAGE PART NUMBER	1234567 NOMENCLATURE	CODE	UNITS PER ASSY
73 -	13A-30011	FUSELAGE ASSY - REAR SECTION COMPLETE (SEE FIG. 32)	001-030	1
	13A-30011-803	FUSELAGE ASSY - REAR SECTION COMPLETE	031-200	1
	13A-30011-801	FUSELAGE ASSY - REAR SECTION COMPLETE	201-210	1
	13A-30011-805	FUSELAGE ASSY - REAR SECTION COMPLETE	211-300	1
	13A-30011-807	FUSELAGE ASSY - REAR SECTION COMPLETE	301-	1
	170-54131	•ELECTRICAL EQUIP. INSTL - REAR FUSELAGE (SEE SECTION 10)		REF
	13A-71062	•HYDRAULIC EQUIP. INSTL - REAR FUSELAGE (SEE SECTION 11)		REF
	13A-34001	•FRAME ASSY - REAR FUSELAGE	001-030	1
	13A-34001-803	•FRAME ASSY - REAR FUSELAGE	031-200	1
	13A-34001-801	•FRAME ASSY - REAR FUSELAGE	201-210	1
	13A-34001-805	•FRAME ASSY - REAR FUSELAGE	211-300	1
	13A-34001-807	•FRAME ASSY - REAR FUSELAGE	301-490	1
	13A-34001-809	•FRAME ASSY - REAR FUSELAGE	491-610	1
	13A-34001-811	•FRAME ASSY - REAR FUSELAGE	611-	1
	151-39002-1	••SPEEDBRAKE INSTL - FUSELAGE (PORT SIDE) (SEE FIG. 80)		REF
	151-39002-2	••SPEEDBRAKE INSTL - FUSELAGE (STBD SIDE) (SEE FIG. 80)		REF
	13-92028-1	••BRACKET INSTL - SURFACE CONTROL PULLEY FUSELAGE STA 239 PORT (SEE FIG. 73A)		REF
	13-92028-2	••BRACKET INSTL - SURFACE CONTROL PULLEY FUSELAGE STA 239 STBD (SEE FIG. 73A)		REF
	13A-34002	••FRAME ASSY - REAR FUS UPPER (SEE FIG. 76)		REF
- 1	13A-34141-3	••SEAL ASSY - ENGINE FIREWALL ATTACHING (UPPER STA 245)		1
	13A-34141-5	••SEAL ASSY - ENGINE FIREWALL ATTACHING (LOWER & SIDE STA 245)		1
	13A-34003	••FRAME ASSY - FUSELAGE STA 236 TO 327	001-030	1
	13A-34003-803	••FRAME ASSY - FUSELAGE STA 236 TO 327	031-200	1
	13A-34003-801	••FRAME ASSY - FUSELAGE STA 236 TO 327	201-210	1
	13A-34003-805	••FRAME ASSY - FUSELAGE STA 236 TO 327	211-300	1
	13A-34003-807	••FRAME ASSY - FUSELAGE STA 236 TO 327	301-490	1
	13A-34003-809	••FRAME ASSY - FUSELAGE STA 236 TO 327	491-	1
	13A-34005-1	•••PANEL ASSY - FUS STA 236-327 (PORT SIDE) (SEE FIG. 74)		REF
	13A-34005-2	•••PANEL ASSY - FUS STA 236-327 (STBD SIDE) (SEE FIG. 74)		REF
- 2	13A-34007	•••PANEL ASSY - FUSELAGE STA 236-298 LOWER (SEE FIG. 75)		REF
	NAS205-9	•••SCREW - (PANEL ATTACHING)		10
	AN960-10L	•••WASHER -		10
	AN365-1032	•••NUT -		10
- 3	170-54033	•••BRACKET ASSY - ELECTRICAL EMY HYDRAULIC CONTROL RELAY		1
	13A-34003-51	•••FRAME ASSY - FUSELAGE STA 245 TO 263 (HYD ALTERNATE PUMP) (PORT SIDE)	001-490	1
	13A-34003-61	•••FRAME ASSY - FUSELAGE STA 245 TO 263 (HYD ALTERNATE PUMP) (PORT SIDE)	491-	1
- 4	13A-71106	••••SUPPORT ASSY - HYDRAULIC ALTERNATE PUMP	001-490	1
	13A-71106-50	••••SUPPORT ASSY - HYDRAULIC ALTERNATE PUMP	491-	1
	AN931-5-9	•••••GROMMET -	001-490	1
	13A-71111	••••ANGLE ASSY - HYDRAULIC ALTERNATE PUMP INTERMEDIATE SHROUD SUPPORT		1
	13A-71112	••••ANGLE - HYDRAULIC ALTERNATE PUMP LOWER INTERMEDIATE SUPPORT		1
- 5	13A-71105	••••ANGLE ASSY - HYDRAULIC ALTERNATE PUMP SHROUD SIDE (FUSELAGE STA 263)		1

FIGURE AND INDEX NUMBER	GROUP FUSELAGE MAJOR ASSEMBLY COMPLETE REAR SECTION FUSELAGE PART NUMBER	1234567 NOMENCLATURE	CODE	UNITS PER ASSY
73 - 6	13A-71113	••••SHROUD ASSY - HYDRAULIC ALTERNATE PUMP (MAKE FROM AN253-2-788)		1
- 7	13A-71108	••••DOOR ASSY - HYDRAULIC ALTR PUMP INBOARD		1
	AN515-8R7	••••SCREW - (DOOR ATTACHING)		14
	13A-71109	••••DOOR ASSY - HYDRAULIC ALTERNATE PUMP		1
	13A-71109-13	•••••HINGE-PIN - HYDRAULIC ALTERNATE PUMP		1
	W98292-1-100	•••••STUD - WING TYPE ROUNDHEAD AIRLOC FASTENER (MKM)		1
	99836	•••••CROSS-PIN - AIRLOC FASTENER (MKM)		1
- 8	176-46002	•••DUCT ASSY - ENGINE BURNER COMPARTMENT COOLING AIR (PORT SIDE)		1
	172-46004	•••BRACKET - ENGINE BURNER COMPARTMENT COOLING AIR DUCT (PORT SIDE)		1
	176-46003	•••DUCT ASSY - ENGINE BURNER COMPARTMENT COOLING AIR (STARBOARD SIDE)		1
- 9	13A-34038-5	•••ANGLE - FRAME FUSELAGE STA 286		1
	13A-34038-23	•••CHANNEL - FRAME FUS STA 286 (PORT SIDE)		1
	13A-34038-24	•••CHANNEL - FRAME FUS STA 286 (STBD SIDE)		1
-10	13A-34032-23	•••FRAME ASSY - LOWER FUSELAGE STA 308		1
-11	151-31314-3	•••FRAME - LOWER FUSELAGE STA 317		1
-12	13A-34134	•••DOUBLER ASSY - JET-PIPE LEVER ACCESS FUSELAGE STA 307-317		1
	S5-300	••••SPRING - FASTENER (DFC)		6
	2C28	•••CLIP - BALL CHAIN ATTACHING (NAA)	001-300	1
	AN960-2L	•••WASHER -	301-	1
-13	151-31598-3	•••ANGLE - BOTTOM FRAME SKIN ATTACHING FUSELAGE STA 327		1
-14	13A-34003-3	•••SKIN - LOWER FUSELAGE STA 298-327		1
	S5-300	•••SPRING - FASTENER (DFC)	201-	2
-15	13A-34020-33	•••FRAME ASSY - CANTED UP. REAR FUS STA 236		1
-16	13A-34131	•••BRACKET - ENGINE WASTE AIR DUCT FUSELAGE STA 327 (STARBOARD SIDE)		1
-17	13B-34021-1	•••SCOOP - COOL AIR INTAKE FUS STA 245 PORT (AS PER EO 05-5E-6A/190)		1
	13B-34021-2	•••SCOOP - COOL AIR INTAKE FUS STA 245 STBD (AS PER EO 05-5E-6A/190)		1
	AN509-10R10	•••SCREW - (SCOOP ATTACHING) (AS PER EO 05-5E-6A/190)		40
	AN960-10	•••WASHER - (AS PER EO 05-5E-6A/190)		40
	AN363-1032	•••NUT - (AS PER EO 05-5E-6A/190)		40
-18	13A-71119	••BRACKET ASSY - HYDRAULIC LINE SUPPORT FUSELAGE STA 237 (PORT SIDE)		1
	13A-34001-57	••ANGLE - (SUPPORT BRACKET ATT) (PORT SIDE)		1
	13A-34001-59	••ANGLE - (SUPPORT BRACKET ATT) (PORT SIDE)		1
	AN520-10R8	••SCREW - (BRACKET TO ANGLE ATTACHING)		4
	AN960-10L	••WASHER -		4
	AN365-1032	••NUT -		4
-19	13A-71220	••BRACKET ASSY - HYDRAULIC LINE SUPPORT FUSELAGE STA 237 (STARBOARD SIDE)		1
	13A-34001-58	••ANGLE - (SUPPORT BRACKET ATT) (STBD SIDE)		1
	13A-34001-59	••ANGLE - (SUPPORT BRACKET ATT) (STBD SIDE)		1
	AN520-10R8	••SCREW - (BRACKET TO ANGLE ATTACHING)		4
	AN960-10L	••WASHER -		4
	AN365-1032	••NUT -		4
-20	13A-60007	••DUCT ASSY - COMPRESSOR COOLING AIR EXHAUST REAR FUSELAGE STA 245		1
	AN507-832R12	••SCREW - (DUCT ATTACHING)		5
	AN365-832	••NUT -		5
	13A-34040	••DOOR ASSY - ELECTRIC DISCONNECT ACCESS REAR FUSELAGE STA 240 (PORT SIDE)	001-200	1

FIGURE AND INDEX NUMBER	GROUP FUSELAGE MAJOR ASSEMBLY COMPLETE REAR SECTION FUSELAGE PART NUMBER	1234567 NOMENCLATURE	CODE	UNITS PER ASSY
73 -21	13A-34040-3	•••DOUBLER ASSY - ELECTRIC DISCONNECT ACC DOOR REAR FUS STA 240 (PORT SIDE)	001-200	1
	S5-300	••••SPRING - FASTENER (DFC) (PORT SIDE)	001-200	4
	2C28	••••CLIP - BALL CHAIN ATT (NAA) (PORT SIDE)	001-200	1
-22	13B-34101	•••COVER ASSY - SPARK PLUG ACCESS REAR FUSELAGE STA 240 (PORT SIDE)	001-200	1
	9C1-1-7	••••CHAIN - BEAD (NAA)	001-200	1
	GF5-175	••••GROMMET - FASTENER (DFC)	001-200	4
	FA5-35	••••FASTENER - FLUSH HEAD (DFC)	001-200	4
-23	161-31312-1	••RETAINER ASSY - FUSELAGE UPPER LONGERON ATTACHING NUT-PLATE (PORT SIDE)		1
	161-31312-2	••RETAINER ASSY - FUSELAGE UPPER LONGERON ATTACHING NUT-PLATE (STARBOARD SIDE)		1
-24	161-31689-1	••RETAINER ASSY - FUSELAGE LOWER LONGERON ATTACHING NUT-PLATE (PORT SIDE)		1
	161-31689-2	••RETAINER ASSY - FUSELAGE LOWER LONGERON ATTACHING NUT-PLATE (STARBOARD SIDE)		1
	AN503-6-6	••SCREW - (RETAINER ATTACHING)		8
	AN960-6L	••WASHER -		8
-25	140-31063-1	••DOOR ASSY - FUSELAGE ATTACHING BOLT UPPER ACCESS STA 236 (PORT SIDE)		1
	140-31063-2	••DOOR ASSY - FUSELAGE ATTACHING BOLT UPPER ACCESS STA 236 (STARBOARD SIDE)		1
	AN507-832R6	•••SCREW - (DOOR ATTACHING)		2
	A6029-832-1	•••NUT - SPECIAL TWIN (TIN)		1
	2C28	•••CLIP - BALL CHAIN ATTACHING (NAA)		1
	9C1-1-4	••CHAIN - BEAD (NAA)		2
-26	140-31062-1	••DOOR ASSY - FUSELAGE ATTACHING BOLT LOWER ACCESS STA 236 (PORT SIDE)		1
	140-31062-2	••DOOR ASSY - FUSELAGE ATTACHING BOLT LOWER ACCESS STA 236 (STARBOARD SIDE)		1
	140-31062-3	•••PLATE - ACCESS DOOR (PORT SIDE)		1
	140-31062-4	•••PLATE - ACCESS DOOR (STARBOARD SIDE)		1
	AN507-832R6	•••SCREW - (ACCESS DOOR ATTACHING)		2
	A6029-832-1	•••NUT - SPECIAL TWIN (TIN)		1
	2C28	•••CLIP - BALL CHAIN ATTACHING (NAA)		1
	S-1192-1-4	••CHAIN - BEAD (CAN)		2
		(CONTINUED SEE FIG. 77)		

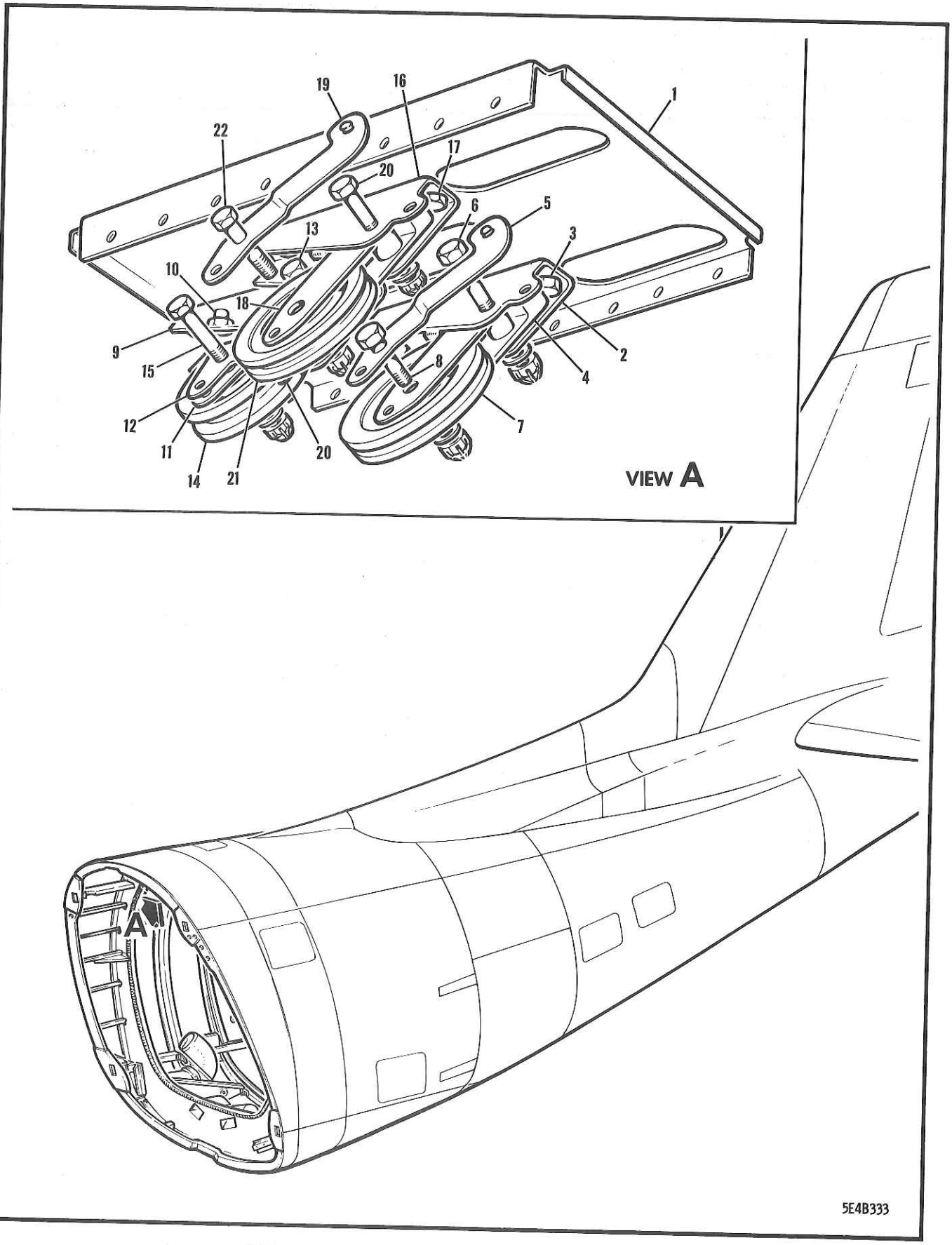

FIGURE 73A SURFACE CONTROL PULLEY BRACKET

FIGURE AND INDEX NUMBER	GROUP FUSELAGE MAJOR ASSEMBLY SURFACE CONTROL PULLEY BRACKET PART NUMBER	1234567 NOMENCLATURE	CODE	UNITS PER ASSY
73A-	13-92028-1	BRACKET INSTL - SURFACE CONTROL PULLEY FUSELAGE STA 239 PORT (SEE FIG. 73)		NP
	13-92028-2	BRACKET INSTL - SURFACE CONTROL PULLEY FUSELAGE STA 239 STBD (SEE FIG. 73)		NP
- 1	13-92027-1	•BRACKET ASSY - SURFACE CONTROL PULLEY FUSELAGE STA 239 PORT SIDE		1
	13-92027-2	•BRACKET ASSY - SURFACE CONTROL PULLEY FUSELAGE STA 239 STARBOARD SIDE		1
- 2	13-92016-1	•BRACKET - ELEVATOR DOWN PULLEY FUSELAGE STA 239 PORT SIDE		1
	13-92016-2	•BRACKET - ELEVATOR DOWN PULLEY FUSELAGE STA 239 STARBOARD SIDE		1
- 3	AN3-4A	•BOLT - (BRACKET TO BRACKET ATTACHING)		2
	AN960D10L	•WASHER -		2
	13-92028-3	•SUPPORT ASSY - (ELEVATOR DOWN PULLEY PORT)		1
	13-92028-4	•SUPPORT ASSY - (ELEVATOR DOWN PULLEY STBD)		1
- 4	13-92018-1	••SUPPORT - ELEVATOR PULLEY STA 239 PORT		1
	13-92018-2	••SUPPORT - ELEVATOR PULLEY STA 239 STBD		1
- 5	13-92019-1	••LATCH - ELEVATOR PULLEY STA 239 PORT SIDE		1
	13-92019-2	••LATCH - ELEVATOR PULLEY STA 239 STBD SIDE		1
- 6	AN3-11A	•BOLT - (SUPPORT TO BRACKET ATTACHING)		1
	S-187048-3S-040	•SPACER - (DAC) (MILLED SLOT TYPE)		1
	13-92030-3	•GUARD - SURFACE CONTROL PULLEY CABLE		1
	AN960A10	•WASHER -		1
	AN365-1032	•NUT -		1
- 7	AN210-2B	•PULLEY - (ELEVATOR DOWN CABLE)		1
- 8	AN3-7A	•BOLT - (PULLEY TO SUPPORT ATTACHING)		1
	AN960A10	•WASHER -		1
	AN365-1032	•NUT -		1
- 9	13-93012-1	•BRACKET - RUDDER PULLEY STA 241 PORT SIDE		1
	13-93012-2	•BRACKET - RUDDER PULLEY STA 241 STBD SIDE		1
-10	AN3-4A	•BOLT - (BRACKET TO BRACKET ATTACHING)		2
	AN960D10L	•WASHER -		2
	13-92028-5	•SUPPORT ASSY - (RUDDER PULLEY PORT SIDE)		1
	13-92028-6	•SUPPORT ASSY - (RUDDER PULLEY STBD SIDE)		1
-11	13-93013-1	••SUPPORT - RUDDER PULLEY STA 241 PORT SIDE		1
	13-93013-12	••SUPPORT - RUDDER PULLEY STA 241 STBD SIDE		1
-12	13-93014-1	••LATCH ASSY - RUDDER PULLEY STA 241 PORT		1
	13-93014-2	••LATCH ASSY - RUDDER PULLEY STA 241 STBD		1
-13	AN3-12A	•BOLT - (SUPPORT TO BRACKET ATTACHING)		1
	S-187048-3S-053	•SPACER - (DAC) (MILLED SLOT TYPE)		1
	13-92030-5	•GUARD - SURFACE CONTROL PULLEY CABLE		1
	AN960A10	•WASHER -		1
	AN365-1032	•NUT -		1
-14	AN210-3B	•PULLEY - (RUDDER CABLE)		1
-15	AN4-11A	•BOLT - (PULLEY TO SUPPORT ATTACHING)		1
	AN960A416	•WASHER -		1
	AN365-428	•NUT -		1
-16	13-92017-1	•BRACKET - ELEVATOR UP PULLEY STA 239 PORT		1
	13-92017-2	•BRACKET - ELEVATOR UP PULLEY STA 239 STBD		1
-17	AN3-4A	•BOLT - (BRACKET TO BRACKET ATTACHING)		2
	AN960D10L	•WASHER -		2
	13-92028-3	•SUPPORT ASSY - (ELEVATOR UP PULLEY PORT)		1
	13-92028-4	•SUPPORT ASSY - (ELEVATOR UP PULLEY STBD)		1
-18	13-92018-1	••SUPPORT - ELEVATOR PULLEY STA 239 PORT		1
	13-92018-2	••SUPPORT - ELEVATOR PULLEY STA 237 STBD		1
-19	13-92019-1	••LATCH - ELEVATOR PULLEY STA 239 PORT SIDE		1
	13-92019-2	••LATCH - ELEVATOR PULLEY STA 239 STBD SIDE		1
-20	AN3-11A	•BOLT - (SUPPORT TO BRACKET ATTACHING)		1
	S-187048-3S-040	•SPACER - (DAC) (MILLED SLOT TYPE)		1

FIGURE AND INDEX NUMBER	GROUP FUSELAGE MAJOR ASSEMBLY SURFACE CONTROL PULLEY BRACKET PART NUMBER	1234567 NOMENCLATURE	CODE	UNITS PER ASSY
73A-	13-92030-3	•GUARD - SURFACE CONTROL PULLEY CABLE		1
	AN960A10	•WASHER -		1
	AN365-1032	•NUT -		1
-21	AN210-2B	•PULLEY - (ELEVATOR UP CABLE)		1
-22	AN3-7A	•BOLT - (PULLEY TO SUPPORT ATTACHING)		1
	AN960A10	•WASHER -		1
	AN365-1032	•NUT -		1
		-000-		

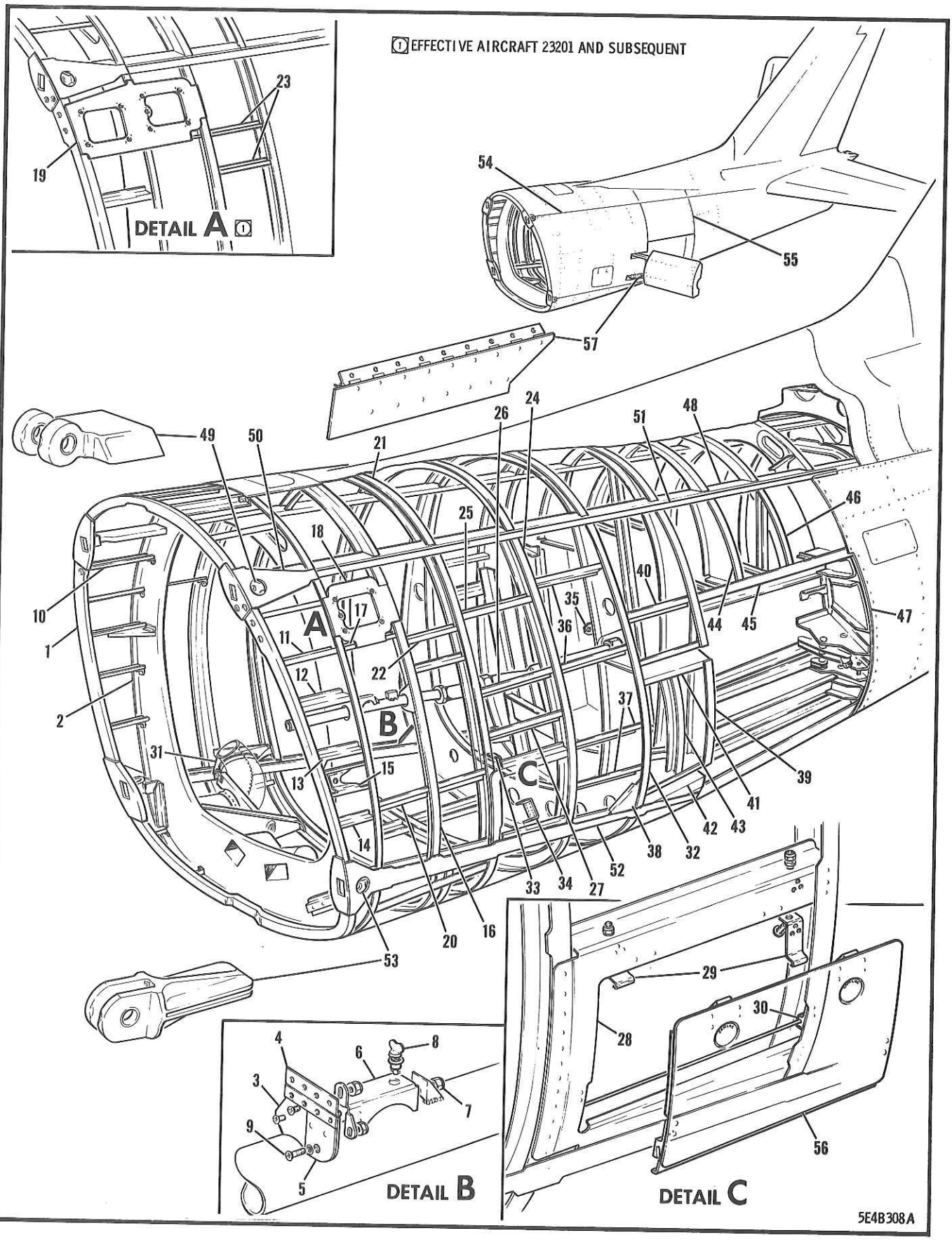

FIGURE 74 FUSELAGE STA 236-327 SIDE PANELS

FIGURE AND INDEX NUMBER	GROUP FUSELAGE MAJOR ASSEMBLY FUSELAGE STA 236-327 SIDE PANELS PART NUMBER	1234567 NOMENCLATURE	CODE	UNITS PER ASSY
74 -	13A-34005-1	PANEL ASSY - SIDE FUSELAGE STA 236-327 (PORT SIDE) (SEE FIG. 73)	001-200	1
	13A-34005-801	PANEL ASSY - SIDE FUS STA 236 237 (PORT)	201-210	1
	13A-34005-803	PANEL ASSY - SIDE FUS STA 236-237 (PORT)	211-300	1
	13A-34005-805	PANEL ASSY - SIDE FUS STA 236-237 (PORT)	301-	1
	13A-34005-2	PANEL ASSY - SIDE FUSELAGE STA 236-237 (STARBOARD SIDE) (SEE FIG. 73)	001-030	1
	13A-34005-804	PANEL ASSY - SIDE FUS STA 236-237 (STBD)	031-200	1
	13A-34005-802	PANEL ASSY - SIDE FUS STA 236-237 (STBD)	201-210	1
	13A-34005-806	PANEL ASSY - SIDE FUS STA 236-237 (STBD)	211-300	1
	13A-34005-808	PANEL ASSY - SIDE FUS STA 236-237 (STBD)	301-	1
	172-31381-801	•WELL INSTL - SPEEDBRAKE SIDE (PORT SIDE) (SEE FIG. 79)		REF
	172-31381-2	•WELL INSTL - SPEEDBRAKE SIDE (STBD SIDE) (SEE FIG. 79)		REF
- 1	13A-34020-31	•FRAME ASSY - REAR CANTED FUS STA 236(PORT)	001-200	1
	13A-34020-801	•FRAME ASSY - REAR CANTED FUS STA 236(PORT)	201-	1
	13A-34020-7	••SPLICE -		1
	13A-34020-32	•FRAME ASSY - REAR CANTED FUS STA 236(STBD)	001-200	1
	13A-34020-802	•FRAME ASSY - REAR CANTED FUS STA 236(STBD)	201-	1
	13A-34020-8	••SPLICE -		1
- 2	13A-34021-3	•FRAME ASSY - SIDE & LOWER REAR FUSELAGE STA 245 (PORT SIDE)	001-200	1
	13A-34021-803	•FRAME ASSY - SIDE & LOWER REAR FUSELAGE STA 245 (PORT SIDE)	201-210	1
	13A-34021-805	•FRAME ASSY - SIDE & LOWER REAR FUSELAGE STA 245 (PORT SIDE)	211-300	1
	13A-34021-807	•FRAME ASSY - SIDE & LOWER REAR FUSELAGE STA 245 (PORT SIDE)	301-	1
	13A-34021-4	•FRAME ASSY - SIDE & LOWER REAR FUSELAGE STA 245 (STARBOARD SIDE)	001-200	1
	13A-34021-804	•FRAME ASSY - SIDE & LOWER REAR FUSELAGE STA 245 (STARBOARD SIDE)	201-	1
	13A-50021	••BRACKET - REAR DISC. PLUG MTG FUS STA 245		1
	13A-50021-4	••BRACKET - REAR DISC. PLUG MTG FUS STA 245		1
	13A-64040-802	••LOCK ASSY - FUEL VENT LINE FUS STA 245 (PORT WING) (AS PER EO 05-5E-6A/177)		1
	13A-64040-23	•••LOCK-PLATE ASSY - FUEL VENT LINE		1
- 3	13A-64040-27	••••LOCK-PLATE - FUEL VENT LINE		1
- 4	13A-64040-19	••••HINGE - FUEL VENT LINE LOCK		1
- 5	13A-64040-29	••••DOUBLER - FUEL VENT LINE LOCK		1
	13A-64040-25	•••BRACKET ASSY - FUEL VENT LINE LOCK	737-	1
- 6	13A-64040-31	••••BRACKET - FUEL VENT LINE LOCK		1
	13A-64040-9	••••CHANNEL - FUEL VENT LINE LOCK		1
- 7	AN3-3A	••••BOLT -		1
	6810-02	••••RETAINER - ONE-LUG BOLT (NSC)		1
	AN365-1032	••••NUT -		1
- 8	4002-2SW	••••STUD - WING HEAD (CFC)		1
	R4G	••••SNAP-RING - GROMMET (CFC)		1
	4002-G	••••GROMMET - FLUSH (CFC)		1
- 9	AN509-8-8	•••SCREW -		3
	AN960D8	•••WASHER -		3
	AN365-832	•••NUT -		3
-10	13A-34005-28	•INTERCOSTAL - REAR FUS STA 235-245 (STBD)	001-200	1
	2C12-7	•CLIP - (NAA) (PORT SIDE)	001-200	2
-11	13A-34005-29	•INTERCOSTAL - REAR FUS STA 235-245 (PORT)	001-200	1
	13A-34005-109	•INTERCOSTAL - REAR FUS STA 235-245 (PORT)	201-	1
	13A-34005-30	•INTERCOSTAL - REAR FUS STA 235-245 (STBD)	001-200	1
	13A-34005-110	•INTERCOSTAL - REAR FUS STA 235-245 (STBD)	201-	1
	2C16-5	•CLIP - (NAA) (PORT SIDE)	001-200	1
	170-31316-3	•CLIP - FORWARD INTERCOSTAL FUSELAGE STA 245 (PORT SIDE)	001-200	1

FIGURE AND INDEX NUMBER	GROUP FUSELAGE MAJOR ASSEMBLY FUSELAGE STA 236-327 SIDE PANELS PART NUMBER	1234567 NOMENCLATURE	CODE	UNITS PER ASSY
74 -	170-31316-3	•CLIP - FORWARD INTERCOSTAL FUSELAGE STA 245 (PORT SIDE)	201-	2
	170-31316-4	•CLIP - FORWARD INTERCOSTAL FUSELAGE STA 245 (STARBOARD SIDE)	001-200	1
	170-31316-4	•CLIP - FORWARD INTERCOSTAL FUSELAGE STA 245 (STARBOARD SIDE)	201-	2
-12	13A-34005-33	•INTERCOSTAL - REAR FUS STA 236-245 (PORT)		1
	13A-34005-34	•INTERCOSTAL - REAR FUS STA 236-245 (STBD)		1
	170-31319	•GUSSET ASSY - FRAME TO INTERCOSTAL FUSELAGE STA 245 (STARBOARD SIDE)		1
-13	13A-34005-19	•INTERCOSTAL - REAR FUS STA 236-245 (PORT)		1
	13A-34005-20	•INTERCOSTAL - REAR FUS STA 236-245 (STBD)		1
-14	13A-34005-31	•INTERCOSTAL - REAR FUS STA 236-245 (PORT)		1
	13A-34005-32	•INTERCOSTAL - REAR FUS STA 236-245 (STBD)		1
-15	13A-96080	•BRACKET ASSY - SURFACE CTL MANUAL ALTR CH/OV DISCONNECT REAR (PORT SIDE)		1
-16	13A-34027-1	•FRAME ASSY - SIDE FUS STA 253 (PORT SIDE)	001-200	1
	13A-34027-801	•FRAME ASSY - SIDE FUS STA 253 (PORT SIDE)	201-	1
	13A-34027-2	•FRAME ASSY - SIDE FUS STA 253 (STBD SIDE)	001-200	1
	13A-34027-802	•FRAME ASSY - SIDE FUS STA 253 (STBD SIDE)	201-	1
-17	13A-34005-35	•INTERCOSTAL - REAR FUS STA 245-253 (PORT)	001-200	1
	13A-34005-107	•INTERCOSTAL - REAR FUS STA 245-253 (PORT)	201-	1
	13A-34005-36	•INTERCOSTAL - REAR FUS STA 245-253 (STBD)	001-200	1
	13A-34005-108	•INTERCOSTAL - REAR FUS STA 245-253 (STBD)	201-	1
	170-31317-3	•CLIP - REAR INTERCOSTAL FUS STA 245 (PORT)	001-200	1
	170-31317-3	•CLIP - REAR INTERCOSTAL FUS STA 245 (PORT)	201-	2
	170-31317-4	•CLIP - REAR INTERCOSTAL FUS STA 245 (STBD)	001-200	1
	170-31317-4	•CLIP - REAR INTERCOSTAL FUS STA 245 (STBD)	201-	2
	AN3-10A	•BOLT -	001-200	1
	AN3-10A	•BOLT -	201-	2
	AN960-10	•WASHER -	001-200	1
	AN960-10	•WASHER -	201-	2
	AN365-1032	•NUT -	001-200	1
	AN365-1032	•NUT -	201-	2
-18	151-31592-1	•DOUBLER ASSY - SPARK PLUG ACCESS CUT-OUT FUSELAGE STA 249 (PORT SIDE)	001-200	1
-19	13B-34100-1	•DOUBLER ASSY - SPARK PLUG ACCESS CUT-OUT (PORT SIDE)	201-	1
	151-31592-2	•DOUBLER ASSY - SPARK PLUG ACCESS CUT-OUT FUSELAGE STA 249 (STARBOARD SIDE)	001-200	1
	13B-34100-2	•DOUBLER ASSY - SPARK PLUG ACCESS CUT-OUT (STARBOARD SIDE)	201-	1
	S5-300	••SPRING - FASTENER (DFC)	001-200	5
	S5-300	••SPRING - FASTENER (DFC)	201-	9
	2C28	•CLIP - BALL CHAIN ATTACHING (NAA)	001-300	1
	AN960-2L	•WASHER -	301-	1
-20	13A-34005-13	•INTERCOSTAL - REAR FUSELAGE STA 245-253 (PORT SIDE)		1
	13A-34005-14	•INTERCOSTAL - REAR FUSELAGE STA 245-253 (STARBOARD SIDE)		1
-21	13A-34022-1	•FRAME ASSY - SIDE FUS STA 263 (PORT SIDE)	001-200	1
	13A-34022-801	•FRAME ASSY - SIDE FUS STA 263 (PORT SIDE)	201-	1
	13A-34022-2	•FRAME ASSY - SIDE FUS STA 263 (STBD SIDE)	001-200	1
	13A-34022-802	•FRAME ASSY - SIDE FUS STA 263 (STBD SIDE)	201-	1
-22	13A-34005-17	•INTERCOSTAL - REAR FUS STA 253-263 (PORT)	001-200	2
	13A-34005-17	•INTERCOSTAL - REAR FUS STA 253-263 (PORT)	201-	1
-23	13A-34005-113	•INTERCOSTAL - REAR FUS STA 253-263 (PORT)	201-	2
	13A-34005-18	•INTERCOSTAL - REAR FUS STA 253-263 (STBD)	001-200	2
	13A-34005-18	•INTERCOSTAL - REAR FUS STA 253-263 (STBD)	201-	1
	13A-34005-114	•INTERCOSTAL - REAR FUS STA 253-263 (STBD)	201-	2

FIGURE AND INDEX NUMBER	GROUP / MAJOR ASSEMBLY / PART NUMBER	FUSELAGE / FUSELAGE STA 236-327 SIDE PANELS / 1234567 NOMENCLATURE	CODE	UNITS PER ASSY
74 -24	13A-34037-1	•FRAME ASSY - SIDE FUS STA 275 (PORT SIDE)		1
	13A-34037-2	•FRAME ASSY - SIDE FUS STA 275 (STBD SIDE)		1
-25	13A-34005-21	•INTERCOSTAL - FUS STA 263-275 (PORT SIDE)		1
	13A-34005-22	•INTERCOSTAL - FUS STA 263-275 (STBD SIDE)		1
-26	13A-34005-99	•INTERCOSTAL - FUS STA 263-275 (PORT SIDE)		1
	13A-34005-22	•INTERCOSTAL - FUS STA 263-275 (STBD SIDE)		1
-27	13A-34005-101	•INTERCOSTAL - FUSELAGE STA 263-275 (PORT)		1
	13A-34005-37	•INTERCOSTAL - FUSELAGE STA 263-275 (STBD)		1
-28	170-31313	•DOUBLER - FIRE-EXTINGUISHER DOOR FUSELAGE STA 263-275 (PORT SIDE)		1
-29		•DELETED		
-30	151-31551	•HINGE - FIRE-EXTINGUISHER DOOR FUSELAGE STA 263-275 (PORT SIDE)		2
		OR		
	151-31551-800	•HINGE - FIRE-EXTINGUISHER DOOR FUSELAGE STA 263-275 (PORT SIDE)		
		OR		
	151-31551-953	•HINGE - (FOR REPAIRS ONLY)		
-31	172-46005	•BRACKET - ENGINE BURNER COMPARTMENT COOLING AIR DUCT (STARBOARD SIDE)		1
-32	13A-34038-1	•FRAME ASSY - SIDE & LOWER FUS STA 286 PORT		1
	13A-34038-2	•FRAME ASSY - SIDE & LOWER FUS STA 286 STBD		1
-33	13A-60027	••BRACKET - ENGINE WASTE AIR DUCT FUSELAGE STA 286 (STARBOARD SIDE)	001-100	1
	13A-60027-801	••BRACKET - ENGINE WASTE AIR DUCT FUSELAGE STA 286 (STARBOARD SIDE)	101-	1
-34	172-58144	••BRACKET - HYD GROUND TEST HAND-PUMP SUPPORT REAR (PORT SIDE)		1
-35	172-54043	••BRACKET - ELECTRICAL FIRE DETECTION STA 286 (PORT SIDE)		1
	172-54043	••BRACKET - ELECTRICAL FIRE DETECTION STA 286 (STARBOARD SIDE)		2
-36	13A-34005-23	•INTERCOSTAL - REAR FUS STA 274-286 (PORT)		2
	13A-34005-24	•INTERCOSTAL - REAR FUS STA 274-286 (STBD)		2
-37	13A-34005-25	•INTERCOSTAL - REAR FUS STA 274-286 (PORT)		2
	13A-34005-26	•INTERCOSTAL - REAR FUS STA 274-286 (STBD)		2
-38	170-31315-1	•GUSSET - SPEEDBRAKE WELL SUPPORT FUSELAGE STA 286 (PORT SIDE)		1
	170-31315-2	•GUSSET - SPEEDBRAKE WELL SUPPORT FUSELAGE STA 286 (STARBOARD SIDE)		1
-39	151-31581-51	•FRAME ASSY - SIDE & LOWER FUS STA 298 PORT		1
	151-31581-52	•FRAME ASSY - SIDE & LOWER FUS STA 298 STBD		1
-40	13A-34005-15	•INTERCOSTAL - REAR FUS STA 286-298 (PORT)		1
	13A-34005-16	•INTERCOSTAL - REAR FUS STA 286-298 (STBD)		1
-41	140-39059-5	•INTERCOSTAL ASSY - SPEEDBRAKE HINGE UPPER (PORT SIDE)	001-300	1
	140-39059-801	•INTERCOSTAL ASSY - SPEEDBRAKE HINGE UPPER (STARBOARD SIDE)	301-541	1
	140-39059-803	•INTERCOSTAL ASSY - SPEEDBRAKE HINGE UPPER (PORT SIDE)	542-662	1
	140-39059-805	•INTERCOSTAL ASSY - SPEEDBRAKE HINGE UPPER (PORT SIDE)	663-	1
	140-39059-6	•INTERCOSTAL ASSY - SPEEDBRAKE HINGE UPPER (STARBOARD SIDE)	001-300	1

FIGURE AND INDEX NUMBER	GROUP FUSELAGE MAJOR ASSEMBLY FUSELAGE STA 236-327 SIDE PANELS PART NUMBER	1234567 NOMENCLATURE	CODE	UNITS PER ASSY
74 -	140-39059-802	•INTERCOSTAL ASSY - SPEEDBRAKE HINGE UPPER (STARBOARD SIDE)	301-541	1
	140-39059-804	•INTERCOSTAL ASSY - SPEEDBRAKE HINGE UPPER (STARBOARD SIDE)	542-662	1
	140-39059-806	•INTERCOSTAL ASSY - SPEEDBRAKE HINGE UPPER (STARBOARD SIDE)	663-	1
	140-39059-7	••PLATE - SPEEDBRAKE HINGE UPPER INTERCST	001-300	1
	140-39059-17	••PLATE - SPEEDBRAKE HINGE UPPER INTERCST	301-	1
	140-39059-9	••PLATE - SPEEDBRAKE HINGE UPPER INTERCST	001-300	1
	140-39059-19	••PLATE - SPEEDBRAKE HINGE UPPER INTERCST	301-541	1
	140-39059-29	••PLATE - SPEEDBRAKE HINGE UPPER INTERCST	541-662	1
	140-39059-39	••PLATE - SPEEDBRAKE HINGE UPPER INTERCST	663-	1
	AN507-1032R10	••SCREW - (PLATE ATTACHING)	001-300	8
	AN509-1032R10	••SCREW - (PLATE ATTACHING)	301-	8
	AN960-10L	••WASHER -		8
	AN365-1032	••NUT -		8
-42	140-39058-1	•INTERCOSTAL ASSY - SPEEDBRAKE HINGE LOWER (PORT SIDE)	001-300	1
	140-39058-801	•INTERCOSTAL ASSY - SPEEDBRAKE HINGE LOWER (PORT SIDE)	301	1
	140-39058-2	•INTERCOSTAL ASSY - SPEEDBRAKE HINGE LOWER (STARBOARD SIDE)	001-300	1
	140-39058-802	•INTERCOSTAL ASSY - SPEEDBRAKE HINGE LOWER (STARBOARD SIDE)	301-	1
-43	140-39064-1	•INTERCOSTAL ASSY - SPEEDBRAKE FUSELAGE STA 292 (PORT SIDE)		1
	140-39064-2	•INTERCOSTAL ASSY - SPEEDBRAKE FUSELAGE STA 292 (STARBOARD SIDE)		1
-44	13A-34032-31	•FRAME ASSY - LOWER FUS STA 308 (PORT SIDE)		1
	13A-34032-32	•FRAME ASSY - LOWER FUS STA 308 (STBD SIDE)		1
-45	13A-34005-9	•INTERCOSTAL - FUSELAGE STA 298-337 (PORT)		1
	13A-34005-10	•INTERCOSTAL - FUSELAGE STA 298-327 STBD		1
-46	151-31314-31	•FRAME ASSY - SIDE & LOWER FUS STA 317 PORT		1
	151-31314-32	•FRAME ASSY - SIDE & LOWER FUS STA 317 STBD		1
-47	151-31316-61	•FRAME ASSY - SIDE & LOWER FUS STA 327 PORT		1
	151-31316-62	•FRAME ASSY - SIDE & LOWER FUS STA 327 STBD	001-030	1
	151-31316-802	•FRAME ASSY - SIDE & LOWER FUS STA 327 STBD	031-560	1
	151-31316-804	•FRAME ASSY - SIDE & LOWER FUS STA 327 STBD (EFF 031-560 AS PER EO 05-5E-6A/97)	561-	1
	151-31316-31	••ANGLE - SIDE & LOWER FRAME FUSELAGE STA 327 (PORT SIDE)		1
	151-31316-952	••ANGLE - SIDE & LOWER FRAME FUS STA 327 (STBD) (AS PER EO 05-5E-6A/97)		1
-48	13A-34030-1	•LONGERON ASSY - UPPER FUS STA 236-332 PORT		1
	13A-34030-2	•LONGERON ASSY - UPPER FUS STA 236-332 STBD		1
	13A-34030-23	••CLIP - UPPER LONGERON TO FRAME ATTACHING UPPER REAR FUS STA 327 (PORT SIDE)		1
	13A-34030-24	••CLIP - UPPER LONGERON TO FRAME ATTACHING UPPER REAR FUS STA 327 (STBD SIDE)		1
	151-31359-1	••CLIP - FRAME TO UPPER LONGERON LOWER ATTACHING FUS STA 327 (PORT SIDE)		1
	151-31359-2	••CLIP - FRAME TO UPPER LONGERON LOWER ATTACHING FUS STA 327 (STBD SIDE)		1
	AN3-6A	••BOLT - (CLIP ATTACHING)		2
	AN960-10	••WASHER -		4
	AN365-1032	••NUT -		2
	151-31596-1	••FITTING - UPPER LONGERON TO FRAME ATT LWR REAR FUSELAGE STA 298 (PORT SIDE)		1
	151-31596-2	••FITTING - UPPER LONGERON TO FRAME ATT LWR REAR FUSELAGE STA 298 (STBD SIDE)		1

FIGURE AND INDEX NUMBER	GROUP FUSELAGE MAJOR ASSEMBLY FUSELAGE STA 236-327 SIDE PANELS PART NUMBER	1234567 NOMENCLATURE	CODE	UNITS PER ASSY
74 -	151-31597-1	••FITTING - FRAME TO UPPER LONGERON UPPER ATTACHING FUS STA 298 (PORT SIDE)		1
	151-31597-2	••FITTING - FRAME TO UPPER LONGERON UPPER ATTACHING FUS STA 298 (STBD SIDE)		1
	AN4-10A	••BOLT - (FITTING ATTACHING)		2
	AN365-428	••NUT -		2
	152-31379-13	••FITTING ASSY - UPPER REAR LONGERON FUSELAGE STA 235 (PORT SIDE)		1
	152-31379-14	••FITTING ASSY - UPPER REAR LONGERON FUSELAGE STA 235 (STARBOARD SIDE)		1
-49	152-31379-11	•••FITTING - UPPER REAR LONGERON FUSELAGE STA 235 (PORT SIDE)		1
	152-31379-12	•••FITTING - UPPER REAR LONGERON FUSELAGE STA 235 (STARBOARD SIDE)		1
	151-31358-3	•••BUSHING - REAR TO FWD LONGERON FITTING		1
	151-31358-5	•••BUSHING - REAR TO FWD LONGERON FITTING		1
	140-31312-11	•••PLATE - REAR LONGERON FUSELAGE STA 236		1
-50	151-31391-1	•DOUBLER - UPPER LONGERON FUS STA 235(PORT)		1
	151-31391-2	•DOUBLER - UPPER LONGERON FUS STA 235(STBD)		1
-51	13A-34005-7	•CAP - SIDE FUSELAGE STA 245-332		1
-52	151-31350-81	•LONGERON ASSY - LOWER FUS STA 236-332 PORT		1
	151-31350-52	•LONGERON ASSY - LOWER FUS STA 236-332 STBD		1
	151-31362-1	••CLIP - FRAME TO LOWER LONGERON UPPER ATTACHING FUS STA 327 (PORT SIDE)		1
	151-31362-2	••CLIP - FRAME TO LOWER LONGERON UPPER ATTACHING FUS STA 327 (STBD SIDE)		1
	151-31363-1	••CLIP - FRAME TO LOWER LONGERON LOWER ATTACHING FUS STA 327 (PORT SIDE)		1
	151-31363-2	••CLIP - FRAME TO LOWER LONGERON LOWER ATTACHING FUS STA 327 (STBD SIDE)		1
	AN4-11A	••BOLT - (FITTING ATTACHING)		2
	AN960-416	••WASHER -		2
	AN365-428	••NUT -		2
	151-31579-1	••BRACKET - FRAME TO LOWER LONGERON LOWER ATTACHING FUS STA 298 (PORT SIDE)		1
	151-31579-2	••BRACKET - FRAME TO LOWER LONGERON LOWER ATTACHING FUS STA 298 (STBD SIDE)		1
	AN3-5A	••BOLT - (BRACKET ATTACHING)		2
	AN960D10	••WASHER -		2
	AN365-1032	••NUT -		2
	151-31582-1	••FITTING - FRAME TO LOWER LONGERON LOWER ATTACHING FUS STA 287 (PORT SIDE)		1
	151-31582-2	••FITTING - FRAME TO LOWER LONGERON LOWER ATTACHING FUS STA 287 (STBD SIDE)		1
	151-31583-1	••FITTING - FRAME TO LOWER LONGERON UPPER ATTACHING FUS STA 287 (PORT SIDE)		1
	151-31583-2	••FITTING - FRAME TO LOWER LONGERON UPPER ATTACHING FUS STA 287 (STBD SIDE)		1
	AN3-6A	••BOLT - (FITTING ATTACHING)		2
	AN960-10	••WASHER -		2
	AN365-1032	••NUT -		2
	151-31593-13	••FITTING ASSY - LOWER REAR LONGERON FUSELAGE STA 241 (PORT SIDE)		1
	151-31593-14	••FITTING ASSY - LOWER REAR LONGERON FUSELAGE STA 241 (STARBOARD SIDE)		1
-53	151-31593-11	•••FITTING - LOWER REAR LONGERON FUSELAGE STA 241 (PORT SIDE)		1
	151-31593-12	•••FITTING - LOWER REAR LONGERON FUSELAGE STA 241 (STARBOARD SIDE)		1
	151-31358-7	•••BUSHING - REAR TO FWD FUS LONGERON FTG		1

FIGURE AND INDEX NUMBER	GROUP / MAJOR ASSEMBLY / PART NUMBER	FUSELAGE / FUSELAGE STA 236-327 SIDE PANELS / 1234567 NOMENCLATURE	CODE	UNITS PER ASSY
74 -	151-31358-13	•••BUSHING - REAR TO FWD FUS LONGERON FTG		1
	140-31312-11	•••PLATE - REAR LONGERON FUSELAGE STA 241		1
	AN509-8R9	•SCREW - (LONGERON ATTACHING)		5
	AN960-10	•WASHER -		5
	AN365-1032	•NUT -		5
-54	13A-34005-3	•SKIN - FUSELAGE STA 236-298 (PORT SIDE)	001-200	1
	13A-34005-111	•SKIN - FUSELAGE STA 236-298 (PORT SIDE)	201-	1
	13A-34005-4	•SKIN - FUSELAGE STA 236-298 (STBD SIDE)	001-200	1
	13A-34005-112	•SKIN - FUSELAGE STA 236-298 (STBD SIDE)	201-	1
-55	13A-34005-5	•SKIN - FUSELAGE STA 298-327 (PORT SIDE)		1
	13A-34005-6	•SKIN - FUSELAGE STA 298-327 (STBD SIDE)		1
-56	151-31552-802	•DOOR ASSY - FIRE-EXTINGUISHER FUSELAGE STA 263-275 (PORT SIDE) (AS PER EO 05-5E-6A/221)		1
	H-5000-2-064-125	••LATCH ASSY - FLUSH (HAS) (REPL KM610-64 AS PER EO 05-5E-6A/221)		1
	151-31551-800	••HINGE - FIRE-EXTINGUISHER DOOR FUSELAGE STA 263-275 (PORT SIDE) (AS PER EO 05-5E-6A/221)		1
	9C1-3-7	••SAFETY-CHAIN - (NAA) (PORT SIDE)		1
	AN253-5-1163	•HINGE-PIN -		1
-57	140-39060-1	•DOOR ASSY - SPEEDBRAKE LOWER BEAM COVER (PORT SIDE)		1
	140-39060-2	•DOOR ASSY - SPEEDBRAKE LOWER BEAM COVER (STARBOARD SIDE)		1
	140-39061	•SPRING - SPEEDBRAKE LOWER BEAM COVER DOOR		1
	AN42-3A	•EYE-BOLT - (SPRING RETAINING)		1
	AN960-10	•WASHER -		1
	AN365-1032	•NUT -		1

-000-

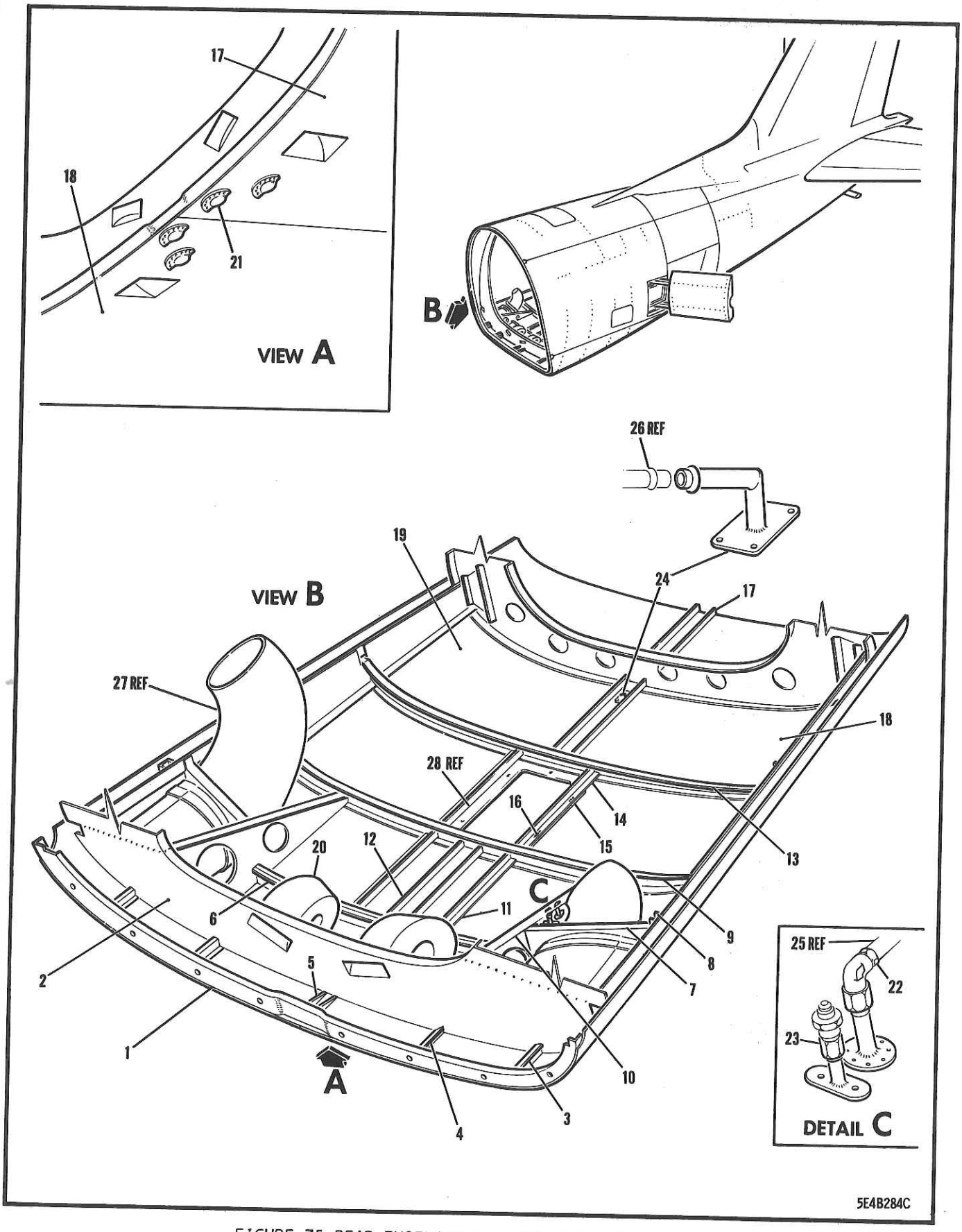

FIGURE 75 REAR FUSELAGE STA 236-298 LOWER FRAME

FIGURE AND INDEX NUMBER	GROUP FUSELAGE MAJOR ASSEMBLY REAR FUSELAGE STA 236-298 LOWER FRAME PART NUMBER	1234567 NOMENCLATURE	CODE	UNITS PER ASSY
75 -	13A-34007	PANEL ASSY - FUSELAGE STA 236-298 LOWER (SEE FIG. 73)	001-490	1
	13A-34007-800	PANEL ASSY - FUSELAGE STA 236-298 LOWER	491-	1
- 1	13A-34020-35	•FRAME ASSY - REAR FUSELAGE STA 236 CANTED		1
- 2	13A-34021-5	•FRAME ASSY - REAR FUS STA 245 SIDE & LOWER		1
- 3	13A-34007-17	•INTERCOSTAL - (FUS STA 241-245 PORT OUTER)		1
	13A-34007-18	•INTERCOSTAL - (FUS STA 241-245 STBD OUTER)		1
- 4	13A-34007-19	•INTERCOSTAL - (FUS STA 241-245 PORT INNER)		1
	13A-34007-20	•INTERCOSTAL - (FUS STA 241-245 STBD INNER)		1
- 5	13A-34007-21	•INTERCOSTAL - (FUS STA 241-245 CENTRE)		1
- 6	151-31345	•FRAME ASSY - FUSELAGE STA 253 LOWER CENTRE		1
	13A-34007-7	•CHANNEL - (FUSELAGE STA 244-253 CENTRE)		1
- 7	151-31319-1	•FRAME - FUSELAGE STA 253 LOWER INTER PORT		1
	151-31319-2	•FRAME - FUSELAGE STA 253 LOWER INTER STBD		1
- 8	151-31365-3	•FRAME - FUSELAGE STA 255 LOWER INTER PORT		1
	151-31365-4	•FRAME - FUSELAGE STA 255 LOWER INTER STBD		1
- 9	13A-34025	•FRAME ASSY - FUSELAGE STA 263 LOWER		1
-10	151-31574-1	•INTERCOSTAL - FUS STA 245-263 LOWER PORT		1
	151-31574-2	•INTERCOSTAL - FUS STA 245-263 LOWER STBD		1
-11	13A-34007-33	•STIFFENER - (FUSELAGE STA 253-263 PORT)		1
	13A-34007-34	•STIFFENER - (FUSELAGE STA 253-263 STBD)		1
-12	13A-34007-37	•CHANNEL - (FUSELAGE STA 253-263 CENTRE)		1
-13	13A-34033	•FRAME ASSY - FUSELAGE STA 274 LOWER		1
-14	13A-34007-31	•STIFFENER - (FUSELAGE STA 263-274 PORT)		1
	13A-34007-32	•STIFFENER - (FUSELAGE STA 263-274 STBD)		1
-15	13A-34135	•DOUBLER ASSY - FUSELAGE STA 263-274 BOTTOM		1
	S5-325	••SPRING - FASTENER (DFC)		2
-16	S5-325	•SPRING - FASTENER (DFC)		4
	S-1192-2-7	•SAFETY-CHAIN - (CAN)	001-490	1
	AN960-2L	•WASHER -	301-	1
-17	13A-34007-5	•CHANNEL - (FUSELAGE STA 274-298 CENTRE)		1
-18	13A-34007-3	•SKIN - (FUSELAGE STA 236-298 LOWER PORT)		1
-19	13A-34007-4	•SKIN - (FUSELAGE STA 236-298 LOWER STBD)		1
-20	13A-34039-1	•DUCT ASSY - FUSELAGE STA 245-253 REAR COOLING PORT SIDE		1
	13A-34039-2	•DUCT ASSY - FUSELAGE STA 245-253 REAR COOLING STARBOARD SIDE		1
	NAS220-8	••SCREW - (COOLING DUCT TO FRAME ATTACHING)		7
	AN960-8L	••WASHER -		7
	AN363-832	••NUT -		7
-21	140-31070	•SCUPPER - REAR FUS DRAIN HOLE (STA 298)		4
-22	151-42086	•DRAIN ASSY - ENGINE TURBINE HOUSING FUSELAGE STA 278 (PORT SIDE)		1
-23	13A-71125	•DRAIN ASSY - REAR FUS STA 255 (PORT SIDE) (AS PER EO 05-5E-6A/84)		1
-24	13A-60024-3	•TUBE ASSY - ENGINE WASTE AIR DUCT DRAIN		1
-25	13A-71814-25	LINE ASSY - ALTERNATE SURFACE CONTROL DRAIN (SEE SECTION 11)		REF
-26	13A-60003-7	HOSE - WASTE AIR DUCT FUEL DRAIN (SEE SECTION 5)		REF
-27	176-46003	DUCT ASSY - ENGINE BURNER COMPARTMENT COOLING AIR STBD SIDE (SEE FIG. 73)		REF
-28	13A-34136	DOOR ASSY - FUSELAGE STA 263-275 BOTTOM (SEE FIG. 32)		REF

-000-

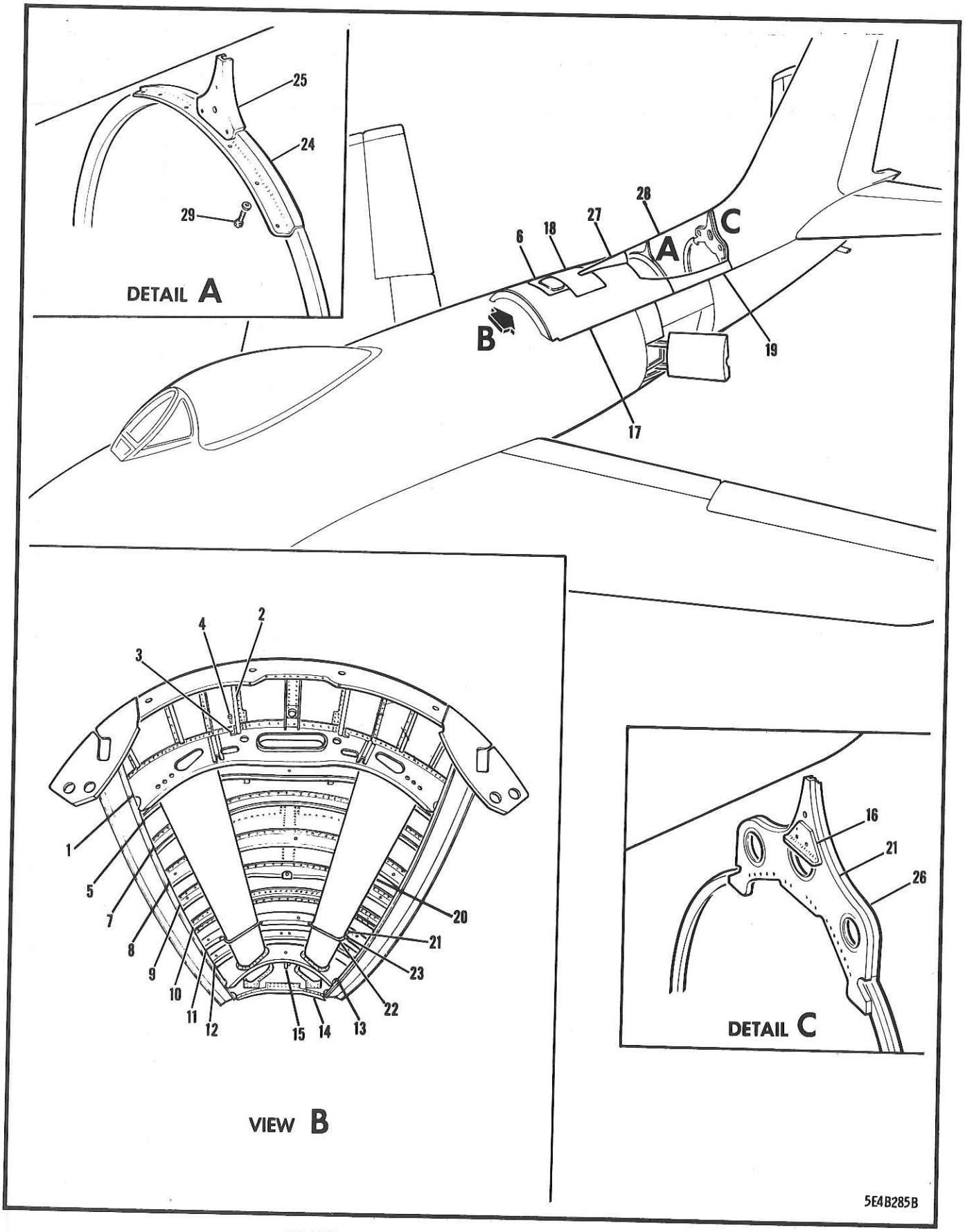

FIGURE 76 REAR FUSELAGE UPPER FRAME

FIGURE AND INDEX NUMBER	GROUP FUSELAGE MAJOR ASSEMBLY REAR FUSELAGE UPPER FRAME PART NUMBER	1234567 NOMENCLATURE	CODE	UNITS PER ASSY
76 -	13A-34002	FRAME ASSY - REAR FUSELAGE UPPER (SEE FIG. 73)		1
- 1	13A-34015	•FRAME ASSY - FUSELAGE STA 245 UPPER		1
- 2	13A-34002-7	•ZED - REAR FUSELAGE UPPER STA 235-245 PORT		1
	13A-34002-8	•ZED - REAR FUSELAGE UPPER STA 235-245 STBD		1
- 3	13A-34002-17	•CLIP - FRAME TO ZEE		4
- 4	AN3-7A	•BOLT - (CLIP ATTACHING)		2
	AN960D10L	•WASHER -		2
	AN960D10	•WASHER -		2
	AN365-1032	•NUT -		2
- 5	170-31332-801	•FRAME ASSY - FUSELAGE STA 253 UPPER		1
	140-54047	••BRACKET - F/DETN(FUSELAGE STA 253 & 256)		1
- 6	13A-34113	•DUCT ASSY - FUSELAGE STA 245-253 COMPRESSOR COOLING AIR EXHAUST		1
- 7	170-31333	•FRAME - FUSELAGE STA 263 UPPER		1
	2C31	•CLIP - (NAA)		2
- 8	170-31575	•FRAME - FUSELAGE STA 274 UPPER		1
- 9	170-31590-11	•FRAME ASSY - FUSELAGE STA 286 UPPER		1
-10	170-31336-10	•FRAME ASSY - FUSELAGE STA 298 UPPER		1
-11	170-31337	•FRAME - FUSELAGE STA 308 UPPER		1
-12	170-31338	•FRAME - FUSELAGE STA 317 UPPER		1
-13	170-31339	•FRAME ASSY - FUSELAGE STA 327 UPPER		1
-14	170-31341	•FRAME ASSY - FUSELAGE STA 340 UPPER		1
-15	13A-34002-22	•INTERCOSTAL - REAR FUSELAGE STA 327-340 CENTRE UPPER & STARBOARD		2
	13A-34002-21	•INTERCOSTAL - REAR FUS STA 327-340 PORT		1
-16	170-58249	•BRACKET ASSY - HYDRAULIC NORMAL FLIGHT CONTROL FILTER SUPPORT		1
-17	13A-34002-3	•SKIN - REAR FUSELAGE STA 234-298 UPPER		1
-18	13A-34002-27	•PLATE - REAR FUSELAGE STA 253-268 UPPER		1
-19	13A-34002-5	•SKIN - REAR FUSELAGE STA 298-340 UPPER		1
-20	13A-34105-1	•SHROUD ASSY - FUSELAGE STA 245-340 CONTROL CABLE PORT SIDE		1
	13A-34105-2	•SHROUD ASSY - FUSELAGE STA 245-340 CONTROL CABLE STARBOARD SIDE		1
-21	13A-34002-29	•CRADLE - REAR FUSELAGE CONTROL CABLE SHROUD STA 308 PORT SIDE		1
	13A-34002-30	•CRADLE - REAR FUSELAGE CONTROL CABLE SHROUD STA 308 STARBOARD SIDE		1
-22	13A-34002-31	•STRAP - REAR FUS CTL CABLE SHROUD STA 308		2
-23	AN3-4A	•BOLT - (STRAP ATTACHING)		4
	AN960D10	•WASHER -		4
	AN365-1032	•NUT -		4
	170-31300	•FIN ASSY - FUSELAGE DORSAL		1
	170-31300-21	••FRAME - FUSELAGE STA 285 DORSAL FIN		1
-24	170-31300-9	••FRAME - FUSELAGE STA 298 DORSAL FIN LOWER		1
-25	170-31300-19	••FRAME - FUSELAGE STA 298 DORSAL FIN UPPER		1
	170-31300-7	••FRAME - FUSELAGE STA 308 DORSAL FIN		1
	170-31300-5	••FRAME - FUSELAGE STA 327 DORSAL FIN		1
	170-31300-13	••FRAME - FUSELAGE STA 340 DORSAL FIN		1
-26	170-31300-15	••PLATE - FUSELAGE DORSAL FIN SPLICE STA 340 PORT SIDE		1
	170-31300-16	••PLATE - FUSELAGE DORSAL FIN SPLICE STA 340 STARBOARD SIDE		1
-27	170-31300-17	••SKIN - FUSELAGE STA 263-284 DORSAL FIN		1
-28	170-31300-3	••SKIN - FUSELAGE STA 284-340 DORSAL FIN		1
-29	AN3-4A	•BOLT - (FRAME ATTACHING)		12
	AN960D10	•WASHER -		12

-000-

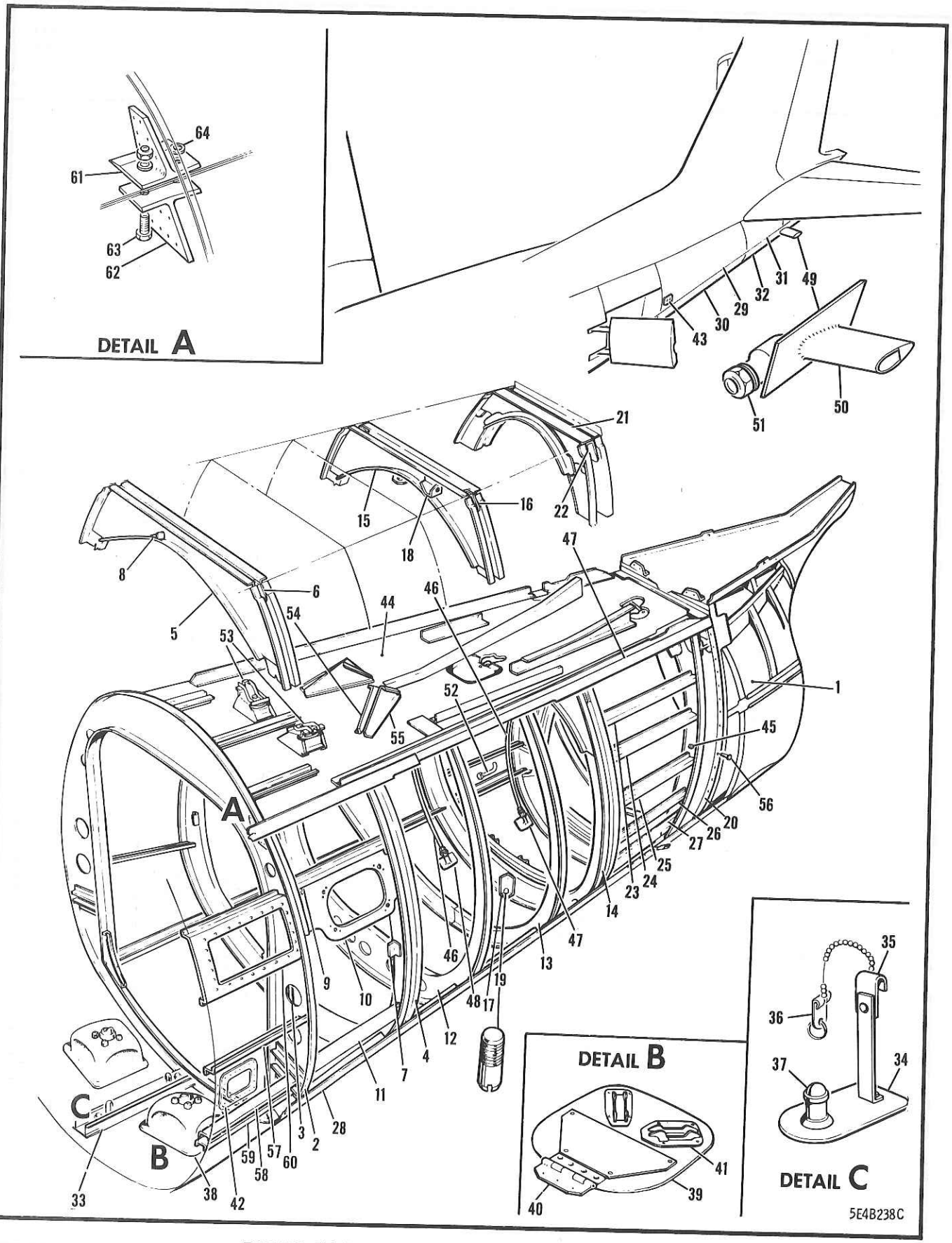

FIGURE 77 REAR FUSELAGE STA 327-430 FRAME

FIGURE AND INDEX NUMBER	GROUP / MAJOR ASSEMBLY / PART NUMBER	FUSELAGE / REAR FUSELAGE STA 327-430 FRAME / 1234567 NOMENCLATURE	CODE	UNITS PER ASSY
77 -	13A-34001	FRAME ASSY - REAR FUSELAGE (SEE FIG. 73)		REF
	13A-34004	•FRAME ASSY - FUSELAGE STA 327 TO 430 TAIL	001-200	1
	13A-34004-801	•FRAME ASSY - FUSELAGE STA 327 TO 430 TAIL	201-300	1
	13A-34004-803	•FRAME ASSY - FUSELAGE STA 327 TO 430 TAIL	301-430	1
	13A-34004-805	•FRAME ASSY - FUSELAGE STA 327 TO 430 TAIL	431-610	1
	13A-34004-807	•FRAME ASSY - FUSELAGE STA 327 TO 430 TAIL	611-	1
- 1	13A-34035-811	••FAIRING ASSY - FUSELAGE TAIL-PIPE (SEE FIG. 78)		REF
- 2	151-31317-60	••FRAME ASSY - FUSELAGE STA 340 SIDE & LWR		1
- 3	172-58185	•••SUPPORT ASSY - HYDRAULIC EMY POWER CTL FILTER (PORT SIDE)		1
	13A-34122	••FRAME ASSY - FUSELAGE STA 352		1
- 4	13A-34122-3	•••FRAME - FUSELAGE STA 352 PORT SIDE		1
	13A-34122-4	•••FRAME - FUSELAGE STA 352 STARBOARD SIDE		1
- 5	13A-34122-9	•••CHANNEL - FUSELAGE STA 352 UPPER		1
	13A-34122-7	•••CHANNEL - FUSELAGE STA 352 UPPER		1
- 6	151-31569-1	•••FITTING ASSY - FUSELAGE STA 352 LONGERON TO STABILIZER PORT SIDE		1
	151-31569-2	•••FITTING ASSY - FUSELAGE STA 352 LONGERON TO STABILIZER STARBOARD SIDE		1
	151-31569-2	•••FITTING ASSY - FUSELAGE STA 352 LONGERON TO STABILIZER STARBOARD SIDE		1
- 7	140-54047	•••BRACKET - FIRE DETECTION FUS STA 351		3
- 8	140-54048	•••BRACKET - F/DETN FUS STA 351 (STBD)		1
	170-58284-1	•••SHIELD - HYDRAULIC FLUID EXH STACK PORT		1
	170-58284-2	•••SHIELD - HYDRAULIC FLUID EXH STACK STBD		1
- 9	13A-34004-29	••INTERCOSTAL - FUSELAGE STA 340-352 PORT		1
	13A-34004-30	••INTERCOSTAL - FUSELAGE STA 340-352 STBD		1
-10	13A-34118-1	••DOUBLER ASSY - FUSELAGE STA 340 TO 352 TRNBKL ACC DOOR PORT SIDE		1
	13A-34118-2	••DOUBLER ASSY - FUSELAGE STA 340 TO 352 TRNBKL ACC DOOR STARBOARD		1
-11	13A-34004-105	••INTERCOSTAL - FUSELAGE STA 340-352 PORT		1
	13A-34004-106	••INTERCOSTAL - FUSELAGE STA 340-352 STBD		1
	13A-34034	••FRAME ASSY - FUSELAGE STA 363		1
-12	13A-34034-3	•••FRAME - FUSELAGE STA 363 PORT SIDE		1
	13A-34034-4	•••FRAME - FUSELAGE STA 363 STARBOARD SIDE		1
	13A-34040-950	•••ANGLE - (REPAIR ONLY)		1
	151-31373-21	••FRAME ASSY - FUSELAGE STA 373 PORT SIDE		1
	151-31373-22	••FRAME ASSY - FUSELAGE STA 373 STBD SIDE		1
-13	151-31373-3	•••FRAME - FUSELAGE STA 373 PORT SIDE		1
	151-31373-4	•••FRAME - FUSELAGE STA 373 STARBOARD SIDE		1
	13A-34036	••FRAME ASSY - FUSELAGE STA 380		1
-14	13A-34036-3	•••FRAME - FUSELAGE STA 380 PORT SIDE		1
	13A-34036-4	•••FRAME - FUSELAGE STA 380 STARBOARD SIDE		1
-15	13A-34036-7	•••CHANNEL - FUSELAGE STA 379 UPPER		1
	13A-34036-5	•••CHANNEL - FUSELAGE STA 380 UPPER		1
-16	151-31565-1	•••FITTING ASSY - FIN TO FUS STA 380 PORT		1
	151-31565-2	•••FITTING ASSY - FIN TO FUS STA 380 STBD		1
	151-31565-2	•••FITTING ASSY - FIN TO FUS STA 380 STBD		1
	13A-34036-29	•••SPLICE - FUSELAGE STA 380 PORT FRAME TO STBD FRAME LOWER ATT		1
-17	151-31564	•••FITTING - FUSELAGE STA 380 MOORING		1
-18	140-54046	•••BRACKET - F/DETN FUS STA 380 (PORT)		1
-19	140-31187	••PLUG - MOORING FITTING FUSELAGE STA 380		1
	13A-34006	••FRAME ASSY - FUSELAGE STA 395 CANTED		1
-20	13A-34006-3	•••FRAME ASSY - FUS STA 395 CANTED PORT		1
	13A-34006-4	•••FRAME ASSY - FUS STA 395 CANTED STBD		1
-21	13A-34006-71	•••CHANNEL ASSY - FUS STA 395 CANTED UPPER		1
-22	151-31385-1	•••FITTING ASSY - FUSELAGE STA 398 LONGERON TO STAB. ATT LH		1

FIGURE AND INDEX NUMBER	GROUP FUSELAGE MAJOR ASSEMBLY REAR FUSELAGE STA 327-430 FRAME PART NUMBER	1234567 NOMENCLATURE	CODE	UNITS PER ASSY
77 -	151-31385-2	•••FITTING ASSY - FUSELAGE STA 398 LONGERON TO STAB. ATT RH		1
	151-31385-2	•••FITTING ASSY - FUSELAGE STA 398 LONGERON TO STAB. ATT RH		1
-23	13A-34004-87	••INTERCOSTAL - (FUS STA 380-396 PORT SIDE)		1
	13A-34004-88	••INTERCOSTAL - (FUS STA 380-396 STBD SIDE)		1
-24	13A-34007-89	••INTERCOSTAL - (FUS STA 380-395 PORT SIDE)		1
	13A-34004-90	••INTERCOSTAL - (FUS STA 380-395 STBD SIDE)		1
-25	13A-34004-91	••INTERCOSTAL - (FUS STA 380-393 PORT SIDE)		1
	13A-34004-92	••INTERCOSTAL - (FUS STA 380-393 STBD SIDE)		1
-26	13A-34004-93	••INTERCOSTAL - (FUS STA 380-391 PORT SIDE)		1
	13A-34004-94	••INTERCOSTAL - (FUS STA 380-391 STBD SIDE)		1
-27	13A-34004-95	••INTERCOSTAL - (FUS STA 380-390 PORT SIDE)		1
	13A-34004-96	••INTERCOSTAL - (FUS STA 380-390 STBD SIDE)		1
-28	151-31351-31	••LONGERON ASSY - FUSELAGE STA 331 TO 395 LOWER PORT SIDE		1
	151-31351-32	••LONGERON ASSY - FUSELAGE STA 331 TO 395 LOWER STARBOARD SIDE		1
-29	13A-34004-3	••SKIN - FUSELAGE STA 340 TO 380 SIDE PORT		1
	13A-34004-4	••SKIN - FUSELAGE STA 340 TO 380 SIDE STBD		1
-30	13A-34004-5	••SKIN - FUSELAGE STA 340 TO 380 LOWER		1
-31	13A-34004-11	••SKIN - FUSELAGE STA 380 TO 395 SIDE PORT		1
	13A-34004-12	••SKIN - FUSELAGE STA 380 TO 395 SIDE STBD	001-200	1
	13A-34004-168	••SKIN - FUSELAGE STA 380 TO 395 SIDE STBD	201-	1
-32	13A-34004-9	••SKIN - FUSELAGE STA 380 TO 395 LOWER		1
-33	172-58111	••CHANNEL ASSY - HYDRAULIC HAND-PUMP SUP. FUS STA 327 TO 340		1
	2C28	•••CLIP - BALL CHAIN ATTACHING (NAA)		2
	99947-P.130	•••RECEPTACLE - AIRLOC FASTENER FLOATING STUD (MKM)		2
	172-58142	••COVER ASSY - HYDRAULIC HAND-PUMP MTG BRKT		2
-34	172-58142-3	•••DOOR - HYDRAULIC HAND-PUMP MTG BRACKET		2
	172-58142-5	•••ANGLE - HYDRAULIC HAND-PUMP MTG BRACKET		2
-35	2C28	•••CLIP - BALL CHAIN ATTACHING (NAA)		1
-36	9C1-1-3	•••CHAIN - BEAD (NAA)		1
-37	99836	•••CROSS-PIN - AIRLOC FASTENER (MKM)		1
	98265-3-340	•••STUD - FLUSH HEAD AIRLOC FASTENER (MKM)		1
-38	172-58302-1	••PAN - HYDRAULIC GRD DISC.FUS STA 333 PORT		1
	172-58302-2	••PAN - HYDRAULIC GRD DISC.FUS STA 333 STBD		1
	172-31020-1	••DOOR ASSY - FUSELAGE STA 333 HYD GROUND DISCONNECT ACC PORT SIDE		1
	172-31020-2	••DOOR ASSY - FUSELAGE STA 333 HYD GROUND DISCONNECT ACC STARBOARD SIDE		1
-39	172-31020-3	•••DOOR - HYD GRD DISC. (FUS STA 333 PORT)		1
	172-31020-4	•••DOOR - HYD GRD DISC. (FUS STA 333 STBD)		1
-40	172-31021	•••HINGE ASSY - HYD GRD DISC. ACCESS DOOR		1
	AN253-2-223	••••HINGE-PIN -		1
-41	H5000-064-125	•••LATCH ASSY - FLUSH (HAS)		2
	172-58198	•••NAME-PLATE - HYDRAULIC EMERGENCY CONTROL FILLING INSTRUCTIONS (PORT SIDE)		1
	172-58199	•••NAME-PLATE - HYDRAULIC NORMAL CONTROL FILLING INSTRUCTIONS (STBD SIDE)		1
-42	13A-34004-133	••DOUBLER ASSY - HYDRAULIC ACCESS DOOR FUS STA 329 TO 333 PORT SIDE		1
	13A-34004-134	••DOUBLER ASSY - HYDRAULIC ACCESS DOOR FUS STA 329 TO 333 STARBOARD SIDE		1
	99947-P.130	•••RECEPTACLE - AIRLOC FASTENER FLOATING STUD (MKM)		2
	S1191	•••CLIP - BALL CHAIN ATTACHING (NAA)	001-300	1
	AN960-2L	•••WASHER -	301-	1

FIGURE AND INDEX NUMBER	GROUP FUSELAGE MAJOR ASSEMBLY REAR FUSELAGE STA 327-430 FRAME PART NUMBER	1234567 NOMENCLATURE	CODE	UNITS PER ASSY
77 -	170-31322-1	••DOOR ASSY - HYD ACC STA 329-333 PORT SIDE		1
	170-31322-2	••DOOR ASSY - HYD ACC STA 329-333 STBD SIDE		1
-43	170-31322-3	•••DOOR - HYDRAULIC ACC STA 329-333 PORT		1
	170-31322-4	•••DOOR - HYDRAULIC ACC STA 329-333 STBD		1
	99836	•••CROSS-PIN - AIRLOC FASTENER (MKM)		2
	98265-2-160	•••STUD - FLUSH HEAD AIRLOC FASTENER (MKM) (SPEC MIL-F-5591)		2
	2C28	•••CLIP - BALL CHAIN ATTACHING (NAA)	001-300	1
	AN960-2L	•••WASHER -	301-	1
	9C1-1-3	•••CHAIN - BEAD (NAA)	001-300	1
	9C1-2-3	•••CHAIN - SAFETY (NAA)	301-	1
	170-31370	••DECK ASSY - REAR FUSELAGE STA 340 TO 402		1
-44	170-31369	•••WEB - DECK REAR FUSELAGE STA 340 TO 402		1
-45	151-31361-11	•••LONGERON ASSY - UPPER FUS STA 332-402 PORT SIDE		1
	151-31361-12	•••LONGERON ASSY - UPPER FUS STA 332-402 STARBOARD SIDE		1
	AN3-4A	••BOLT - (HYDRAULIC ACCESS DOOR ATTACHING)		2
	AN3-5A	••BOLT - (HYDRAULIC ACCESS DOOR ATTACHING)		6
	AN960D10	••WASHER -		13
	AN363-1032	••NUT -		8
-46	13A-34004-127	••TUBE - UPPER DECK DRAIN STA 379 (STBD)		1
-47	13A-34004-129	••TUBE - UPPER DECK DRAIN STA 395 (STBD)		1
	AN815-6	••UNION - (STARBOARD SIDE)		2
	AN819-6Z	••SLEEVE - (STARBOARD SIDE)		2
	AN818-6	••NUT - (STARBOARD SIDE)		2
	AN742-6	••CLAMP - (STARBOARD SIDE)		6
	NAS221-8	••SCREW - (CLAMP ATTACHING) (STBD SIDE)		6
	AN364-1032	••NUT - (STARBOARD SIDE)		6
-48	170-31375	••OUTLET ASSY - FUSELAGE UPPER DECK DRAIN (STARBOARD SIDE)		2
	AN818-6	•••NUT -		1
	AN819-6	•••SLEEVE -		1
-49	13A-64038	••TUBE ASSY - FUEL VENT STREAMLINED (PORT)		1
-50	151-48139	•••DEFLECTOR - FUEL VENT STREAMLINED TUBE		1
-51	AN818-32D	•••NUT -		1
	AN818-32	•••SLEEVE -		1
-52	13A-60009-3	••ELBOW ASSY - ENGINE WASTE AIR DUCT (STBD)	001-200	1
	13B-60032	••DUCT ASSY - ENGINE WASTE AIR (STARBOARD)	201-	1
-53	170-52412	••BRACKET ASSY - RUDDER CTL FUS STA 350 PUL		2
	AN210-4A	•••PULLEY -		1
	AN4H10	•••BOLT - MPI (PULLEY ATTACHING)		1
	AN3-5A	••BOLT - (BRACKET ATTACHING)		8
	AN960D10	••WASHER -		12
	AN363-1032	••NUT -		8
-54	140-52438-1	••BRACKET ASSY - RUDDER CTL PUL STA 361 PORT SIDE		1
	140-52438-2	••BRACKET ASSY - RUDDER CTL PUL STA 361 STARBOARD SIDE		1
	140-52438-2	••BRACKET ASSY - RUDDER CTL PUL STA 361 STARBOARD SIDE		1
	AN3-4A	••BOLT -		8
	4S4-D4-20	•••SPACER - RIVET (NAA)		2
	AN363-1032	••NUT -		8
-55	AN3-4A	••BOLT -		8
	AN960D10	••WASHER -		8
	AN363-1032	••NUT -		8
-56	NAS205-8	••SCREW - (TAIL-PIPE FAIRING ATTACHING)		23
	79HA-38-02	••NUT - (ESN) (HIGH TEMPERATURE ANCHOR)		23
	NAS205-10	••SCREW -		2

FIGURE AND INDEX NUMBER	GROUP FUSELAGE MAJOR ASSEMBLY REAR FUSELAGE STA 327-430 FRAME PART NUMBER	1234567 NOMENCLATURE	CODE	UNITS PER ASSY
77 -	NAS205-10	••SCREW - (TAIL-PIPE FAIRING ATTACHING)		2
-57	13A-34001-47	•INTERCOSTAL - FUSELAGE STA 327 TO 340 PORT		1
	13A-34001-48	•INTERCOSTAL - FUSELAGE STA 327 TO 340 STBD		1
-58	140-39063-1	•INTERCOSTAL - DIVE BRAKE LOCK SUPPORT STA 327-340 UPPER PORT SIDE		1
	140-39063-2	•INTERCOSTAL - DIVE BRAKE LOCK SUPPORT STA 327-340 UPPER STARBOARD SIDE		1
-59	140-39062-1	•INTERCOSTAL - DIVE BRAKE LOCK SUPPORT STA 327-340 LOWER PORT SIDE		1
	140-39062-2	•INTERCOSTAL - DIVE BRAKE LOCK SUPPORT STA 327-340 LOWER STARBOARD SIDE		1
-60	170-31321-1	•DOUBLER ASSY - HYDRAULIC ACCESS DOOR FUS STA 327 TO 340 PORT SIDE		1
	170-31321-2	•DOUBLER ASSY - HYDRAULIC ACCESS DOOR FUS STA 327 TO 340 STARBOARD SIDE		1
-61	151-31553-1	•TEE - FRAME TO UPPER LONGERON UPPER ATT FUS STA 340 PORT SIDE		1
	151-31553-2	•TEE - FRAME TO UPPER LONGERON UPPER ATT FUS STA 340 STARBOARD SIDE		1
-62	151-31364-1	•CLIP - FRAME TO UPPER LONGERON LOWER ATT FUS STA 340 PORT SIDE		1
	151-31364-2	•CLIP - FRAME TO UPPER LONGERON LOWER ATT FUS STA 340 STARBOARD SIDE		1
-63	AN4-7A	•BOLT - (CLIP ATTACHING)		4
	AN960-416	•WASHER -		2
-64	2W18-416M	•WASHER - (NAA) (REAR ONLY)		2
	AN365-428	•NUT -		4

-000-

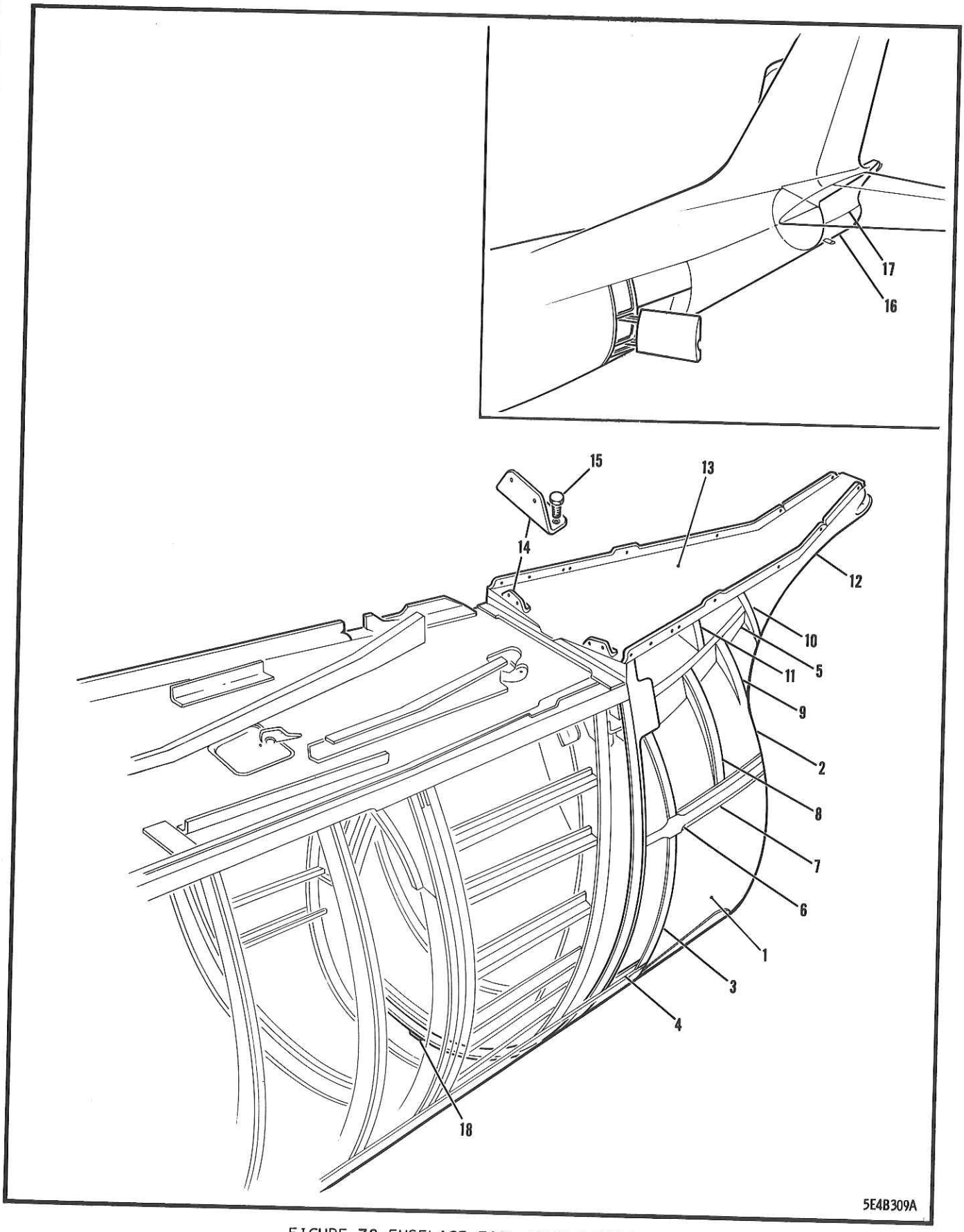

FIGURE 78 FUSELAGE TAIL-PIPE FAIRING

FIGURE AND INDEX NUMBER	GROUP / MAJOR ASSEMBLY / PART NUMBER	FUSELAGE / FUSELAGE TAIL-PIPE FAIRING / 1234567 NOMENCLATURE	CODE	UNITS PER ASSY
78 -	13A-34035-811	FAIRING ASSY - FUSELAGE TAIL-PIPE (AS PER EO 05-5E-6A/258) (SEE FIG. 77)		1
- 1	13A-34035-57	•SHELL - FUSELAGE TAIL-PIPE FAIRING LOWER		1
- 2	13A-34035-61	•SHELL - FUSELAGE TAIL-PIPE FAIRING UPPER		1
	K13-116-3	•PLATE ASSY - (AS PER EO 05-5E-6A/258)		1
	K13-116-7	••PLATE -		14
	S-1256C1032-8A	••SCREW - (CAN) (PLATE ATTACHING)		3
	AN960C10L	••WASHER -		11
	S-1246SS-13-20-40	••WASHER - (CAN)		1
	K13-116-5	•PLATE ASSY - (AS PER EO 05-5E-6A/258)		1
	K13-116-9	••PLATE -		9
	S-1256C1032-8A	••SCREW - (CAN) (PLATE ATTACHING)		9
	S-1246SS-13-20-40	••WASHER - (CAN)		1
- 3	13A-34035-41	•STIFFENER - FUSELAGE TAIL-PIPE FAIRING		1
- 4	13A-34035-27	•STIFFENER - FUSELAGE STA 394-402 PORT		1
	13A-34035-28	•STIFFENER - FUSELAGE STA 394-402 STARBOARD		1
- 5	13A-34035-37	•RIB - FUSELAGE STA 402-415 PORT SIDE		1
	13A-34035-38	•RIB - FUSELAGE STA 402-415 STARBOARD SIDE		1
- 6	13A-34035-23	•SPLICE - FUSELAGE STA 394-410 PIPE FAIRING		2
- 7	13A-34035-25	•SPLICE - FUSELAGE STA 403-410 PIPE FAIRING		2
- 8	13A-34035-19	•STIFFENER - (FUS STA 406 FAIRING PORT)		1
	13A-34035-20	•STIFFENER - (FUS STA 406 FAIRING STBD)		1
	13A-34035-959	•STIFFENER - FUSELAGE TAIL-PIPE STA 402	611-	1
- 9	13A-34035-21	•STIFFENER - (FUS STA 410 FAIRING PORT)		1
	13A-34035-22	•STIFFENER - (FUS STA 410 FAIRING STBD)		1
-10	13A-34035-17	•FORMER - (FUS STA 415 PIPE FAIRING PORT)		1
-11	13A-34035-15	•FORMER - (FUS STA 408 PIPE FAIRING STBD)		1
-12	170-31343	•TIP ASSY - FUS STA 424-430 TAIL-PIPE FAIR.		1
-13	13A-34035-11	•DECK - (TAIL-PIPE FAIRING FUS STA 402-430)		1
-14	13A-34035-53	•CLIP - EMPENNAGE FAIRING FRAME		2
-15	AN3-4A	•BOLT - (CLIP ATTACHING)		4
-16	13A-34035-3	•SKIN - TAIL-PIPE FAIRING STA 327-410 LOWER	001-610	1
	13A-34035-807	•SKIN - TAIL-PIPE FAIRING STA 327-410 LOWER	611-	1
-17	13A-34035-5	•SKIN - PIPE FAIRING STA 394-410 UPPER PORT		1
	13A-34035-6	•SKIN - PIPE FAIRING STA 394-210 UPPER STBD		1
	7S14-1032C9A	•SCREW - ROUNDHEAD CRE (NAA) (SKIN ATT)	611-	8
	AN960C10	•WASHER -	611-	8
	Z1200-02	•NUT - (ESN) (HEX LIGHT 1200 DEG F) (10-32) (ESNA SPEC 403)	611-	8
	151-48132	•GASKET - TAIL FAIRING FUEL DRAIN	001-430	1
-18	151-48131	•SHELL - TAIL FAIRING FUEL DRAIN		1
	AN509-8-7	•SCREW - (DRAIN SHELL ATTACHING)	001-430	6
	AN509-8R7	•SCREW - (DRAIN SHELL ATTACHING)	431-	2
	AN960C8	•WASHER -	001-430	6
	AN960C8	•WASHER -	431-	2
	AN363C832	•NUT -	001-430	6
	AN363C832	•NUT -	431-	2

-000-

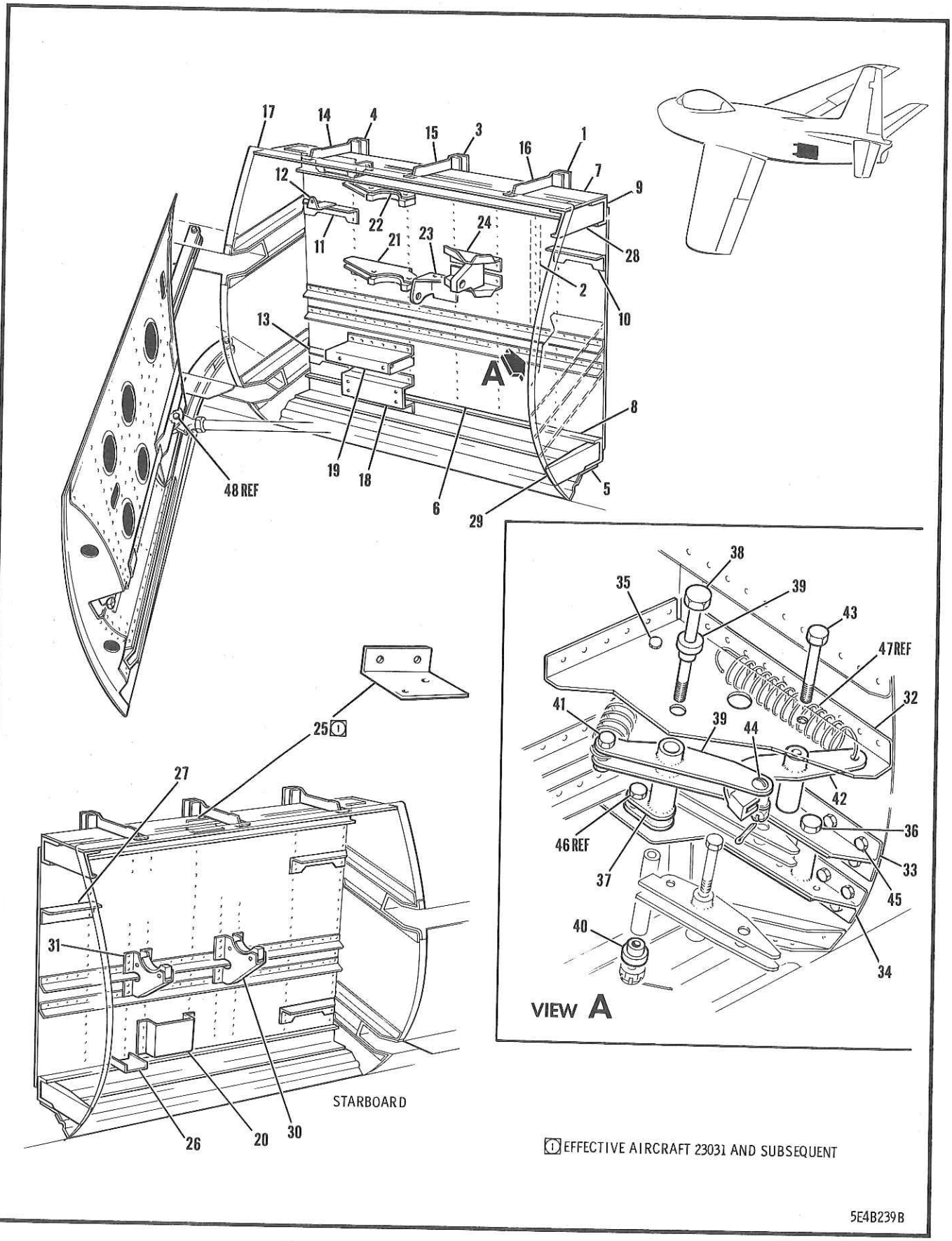

FIGURE 79 FUSELAGE SPEEDBRAKE WELL

FIGURE AND INDEX NUMBER	GROUP FUSELAGE MAJOR ASSEMBLY FUSELAGE SPEEDBRAKE WELL PART NUMBER	1234567 NOMENCLATURE	CODE	UNITS PER ASSY
79 -	172-31381-801	WELL INSTL - SPEEDBRAKE PORT SIDE (SEE FIG. 74)	001-210	NP
	172-31381-803	WELL INSTL - SPEEDBRAKE PORT SIDE	211-	NP
	172-31381-2	WELL INSTL - SPEEDBRAKE STARBOARD SIDE (SEE FIG. 74)	001-030	NP
	172-31381-802	WELL INSTL - SPEEDBRAKE STARBOARD SIDE	031-210	NP
	172-31381-804	WELL INSTL - SPEEDBRAKE STARBOARD SIDE	211-	NP
	172-31382-801	•WELL ASSY - SPEEDBRAKE PORT SIDE	001-210	1
	172-31382-803	•WELL ASSY - SPEEDBRAKE PORT SIDE	211-	1
	172-31382-2	•WELL ASSY - SPEEDBRAKE STARBOARD SIDE	001-030	1
	172-31382-802	•WELL ASSY - SPEEDBRAKE STARBOARD SIDE	031-210	1
	172-31382-804	•WELL ASSY - SPEEDBRAKE STARBOARD SIDE	211-560	1
	172-31382-806	•WELL ASSY - SPEEDBRAKE STARBOARD SIDE	561-	1
- 1	172-31382-15	••CHANNEL - (SPEEDBRAKE WELL STA 322 PORT)		1
	172-31382-16	••CHANNEL - (SPEEDBRAKE WELL STA 322 STBD)		1
- 2	172-31382-17	••CHANNEL - (SPEEDBRAKE WELL STA 319 PORT)		1
	172-31382-25	••CHANNEL - (SPEEDBRAKE WELL STA 319 STBD)		1
- 3	172-31382-19	••CHANNEL - (SPEEDBRAKE WELL STA 312 PORT)		1
	172-31382-20	••CHANNEL - (SPEEDBRAKE WELL STA 312 STBD)		1
	172-31382-27	••CHANNEL - (SPEEDBRAKE WELL STA 308 STBD)		1
- 4	172-31382-21	••CHANNEL - (SPEEDBRAKE WELL STA 303 PORT)		1
	172-31382-22	••CHANNEL - (SPEEDBRAKE WELL STA 303 STBD)		1
- 5	172-31382-7	••WEB - (SPEEDBRAKE WELL LOWER PORT SIDE)		1
	172-31382-8	••WEB - (SPEEDBRAKE WELL LOWER STBD SIDE)		1
- 6	172-31382-101	••WEB - (SPEEDBRAKE WELL PORT SIDE)		1
	172-31382-4	••WEB - (SPEEDBRAKE WELL STARBOARD SIDE)		1
- 7	172-31382-5	••WEB - (SPEEDBRAKE WELL UPPER PORT SIDE)		1
	172-31382-6	••WEB - (SPEEDBRAKE WELL UPPER STBD SIDE)		1
- 8	172-31382-11	••CHANNEL - (SPEEDBRAKE WELL LOWER PORT)		1
	172-31382-12	••CHANNEL - (SPEEDBRAKE WELL LOWER STBD)		1
- 9	172-31382-9	••CHANNEL - (SPEEDBRAKE WELL UPPER PORT)		1
	172-31382-10	••CHANNEL - (SPEEDBRAKE WELL UPPER STBD)		1
-10	172-31382-13	••ANGLE - (SPEEDBRAKE WELL PORT SIDE)		1
	172-31382-14	••ANGLE - (SPEEDBRAKE WELL STARBOARD SIDE)	001-030	1
-11	172-31382-23	••ANGLE - (SPEEDBRAKE WELL PORT SIDE)		1
	172-31382-24	••ANGLE - (SPEEDBRAKE WELL STARBOARD SIDE)		1
-12	2C29-12	••CLIP - (NAA)		1
-13	172-31382-29	••ANGLE - (SPEEDBRAKE WELL PORT SIDE)		1
	172-31382-30	••ANGLE - (SPEEDBRAKE WELL STARBOARD SIDE)		1
-14	172-31382-37	••ANGLE - (SPEEDBRAKE WELL UPPER PORT)		1
	172-31382-38	••ANGLE - (SPEEDBRAKE WELL UPPER STARBOARD)		1
-15	172-31382-35	••ANGLE - (SPEEDBRAKE WELL UPPER PORT)		1
	172-31382-36	••ANGLE - (SPEEDBRAKE WELL UPPER STARBOARD)		1
-16	172-31382-33	••ANGLE - (SPEEDBRAKE WELL UPPER PORT)		1
	172-31382-34	••ANGLE - (SPEEDBRAKE WELL UPPER STARBOARD)		1
-17	172-58184	••SUPPORT ASSY - HYDRAULIC ALTR SUR CTL FORWARD FILTER (PORT SIDE)		
-18	172-58122-1	••SUPPORT ASSY - HYDRAULIC ALTR SURFACE CTL PRESSURE SWITCH PORT SIDE	001-210	1
	172-58122-801	••SUPPORT ASSY - HYDRAULIC ALTR SURFACE CTL PRESSURE SWITCH PORT SIDE	211-	1
	172-58122-2	••SUPPORT ASSY - HYDRAULIC ALTR SURFACE CTL PRESSURE SWITCH STARBOARD SIDE	001-210	1
	172-58122-802	••SUPPORT ASSY - HYDRAULIC ALTR SURFACE CTL PRESSURE SWITCH STARBOARD SIDE	211-	1
-19	172-58123-1	••GUARD ASSY - HYDRAULIC EMY POWER CONTROL PRESSURE SWITCH PORT SIDE	001-210	1
	172-58123-801	••GUARD ASSY - HYDRAULIC EMY POWER CONTROL PRESSURE SWITCH PORT SIDE	211-	1
	172-58123-2	••GUARD ASSY - HYDRAULIC EMY POWER CONTROL PRESSURE SWITCH STARBOARD SIDE	001-210	1

FIGURE AND INDEX NUMBER	GROUP FUSELAGE MAJOR ASSEMBLY FUSELAGE SPEEDBRAKE WELL PART NUMBER	1234567 NOMENCLATURE	CODE	UNITS PER ASSY
79 -	172-58123-802	••GUARD ASSY - HYDRAULIC EMY POWER CONTROL PRESSURE SWITCH STARBOARD SIDE	211-	1
-20	170-58260	••BRACKET ASSY - HYDRAULIC RELIEF-VALVE SUPPORT (STARBOARD SIDE)		1
-21	172-58283	••BRACKET ASSY - HYDRAULIC EMERGENCY POWER CONTROL RSRVR SUP. LOWER (PORT SIDE)		1
-22	172-58282	••BRACKET ASSY - HYDRAULIC EMERGENCY POWER CONTROL RSRVR SUP. UPPER (PORT SIDE)		1
-23	172-52079	••BRACKET ASSY - SURFACE CONTROL MANUAL EMY CHANGE-OVER LINE SUPPORT (PORT SIDE)	001-210	1
-24	172-52093	••SUPPORT ASSY - SURFACE CONTROL MANUAL EMY CHANGE-OVER FAIRLEAD (PORT SIDE)	001-210	1
-25	172-31382-54	••CLIP - (SPEEDBRAKE STARBOARD SIDE)	031-	1
-26	172-31382-40	••CLIP - (SPEEDBRAKE STARBOARD SIDE)		1
-27	172-31382-952	••ANGLE - SIDE SPEEDBRAKE WELL WEB (STBD) (MAKE FROM S-2199 X 4-7/8 (CAN)) (AS PER EO 05-5E-6A/97)	561-	1
-28	151-31388-1	•BRACKET ASSY - SIDE SPEEDBRAKE WELL UPPER CHANNEL ATTACHING FUS STA 327 PORT		1
	151-31388-2	•BRACKET ASSY - SIDE SPEEDBRAKE WELL UPPER CHANNEL ATTACHING FUS STA 327 STBD		1
-29	151-31389-1	•BRACKET ASSY - SIDE SPEEDBRAKE WELL LOWER CHANNEL ATTACHING FUS STA 327 PORT		1
	151-31389-2	•BRACKET ASSY - SIDE SPEEDBRAKE WELL LOWER CHANNEL ATTACHING FUS STA 327 STBD		1
-30	172-58128	•BRACKET ASSY - HYDRAULIC ALTR SURFACE CTL LOWER ACCUMULATOR FWD (STBD SIDE)		1
-31	172-58129	•BRACKET ASSY - HYDRAULIC ALTR SURFACE CTL LOWER ACCUMULATOR REAR (STBD SIDE)		1
	140-39039-21	•LOCK ASSY - FUSELAGE SPEEDBRAKE DOOR PORT		1
	140-39039-22	•LOCK ASSY - FUSELAGE SPEEDBRAKE DOOR STBD	001-030	1
	140-39039-32	•LOCK ASSY - FUSELAGE SPEEDBRAKE DOOR STBD	031-	1
-32	140-39046-5	••BRACKET - SPEEDBRAKE LOCK UPPER PORT		1
	140-39046-8	••BRACKET - SPEEDBRAKE LOCK UPPER STARBOARD	001-030	1
	140-39046-6	••BRACKET - SPEEDBRAKE LOCK UPPER STARBOARD	031-	1
-33	140-39047-11	••BRACKET ASSY - SPEEDBRAKE LOCK CTR PORT		1
	140-39047-12	••BRACKET ASSY - SPEEDBRAKE LOCK CTR STBD		1
-34	140-39048-11	••BRACKET ASSY - SPEEDBRAKE LOCK LOWER PORT		1
	140-39048-12	••BRACKET ASSY - SPEEDBRAKE LOCK LOWER STBD		1
-35	AN3-24A	••BOLT - (BRACKET TO BRACKET ATTACHING)		1
	NAS75-3-130	••BUSHING -		1
	AN960-10	••WASHER -		1
	AN365-1032	••NUT -		1
-36	AN6-27A	••BOLT - (BRACKET TO BRACKET ATTACHING)		1
	NAS75-6-127	••BUSHING -		1
	AN960-616	••WASHER -		1
	AN365-624	••NUT -		1
-37	140-39036-1	••LATCH ASSY - SPEEDBRAKE DOOR PORT SIDE		1
	140-39036-2	••LATCH ASSY - SPEEDBRAKE DOOR STBD SIDE		1
	4B16CF7-22	•••BEARING - SINTERED OIL IMPREGNATED (NAA)		1
	NAS72-4-315	••BUSHING -		2
-38	AN4-45	••BOLT - (LATCH PIVOT)		1
-39	4B16-CF4-4	••BEARING - SINTERED OIL IMPREGNATED (NAA) (AS PER EO 05-5E-6A/109)		1
-40	4B16-CF4-6	••BEARING - SINTERED OIL IMPREGNATED (NAA) (AS PER EO 05-5E-6A/109)		1
	AN960-416	••WASHER -		2
	AN960-616L	••WASHER -		1
	AN310-4	••NUT -		1
	AN380-2-3	••COTTER-PIN -		1

FIGURE AND INDEX NUMBER	GROUP FUSELAGE MAJOR ASSEMBLY FUSELAGE SPEEDBRAKE WELL PART NUMBER	1234567 NOMENCLATURE	CODE	UNITS PER ASSY
79 -41	AN3-10A	••BOLT - (SPRING TO LATCH ATTACHING)		1
	NAS75-3-016	••BUSHING -		1
	AN960-10L	••WASHER -		2
	AN365-1032	••NUT -		1
-42	140-39037-1	••LATCH ASSY - SPEEDBRAKE ACTUATOR PORT		1
	140-39037-2	••LATCH ASSY - SPEEDBRAKE ACTUATOR STBD		1
	4B16CF6-19	•••BEARING - SINTERED OIL IMPREGNATED (NAA)		1
	NAS72-3-113	••BUSHING -		1
-43	AN3-23A	••BOLT - (LATCH PIVOT)		1
	AN960-10	••WASHER -		1
	AN365-1032	••NUT -		1
-44	AN23-15	••BOLT - (ROLLER TO LATCH ATTACHING)		1
	170-39030	••ROLLER ASSY - FUSELAGE SPEEDBRAKE DOOR		1
	4B16RP5-15	•••BEARING - SINTERED OIL IMPREGNATED (NAA)		1
	4B21-53-016	••BUSHING - SPACER (NAA)		1
	AN960-10L	••WASHER -		1
	AN320-3	••NUT -		1
	AN380-2-2	••COTTER-PIN -		1
-45	AN3-5A	•BOLT - (BRACKET TO WEB ATTACHING)		4
	AN3-4A	•BOLT - (BRACKET TO WEB ATTACHING)		4
	AN960A10	•WASHER -		8
	AN365-1032	•NUT -		8
-46	AN5-10A	BOLT - (SEE SECTION 11)		REF
-47	123-53136	SPRING - COMPRESSION (SEE FIG. 80)		REF
-48	AN9-15A	BOLT - (SEE SECTION 11)		REF
		-000-		

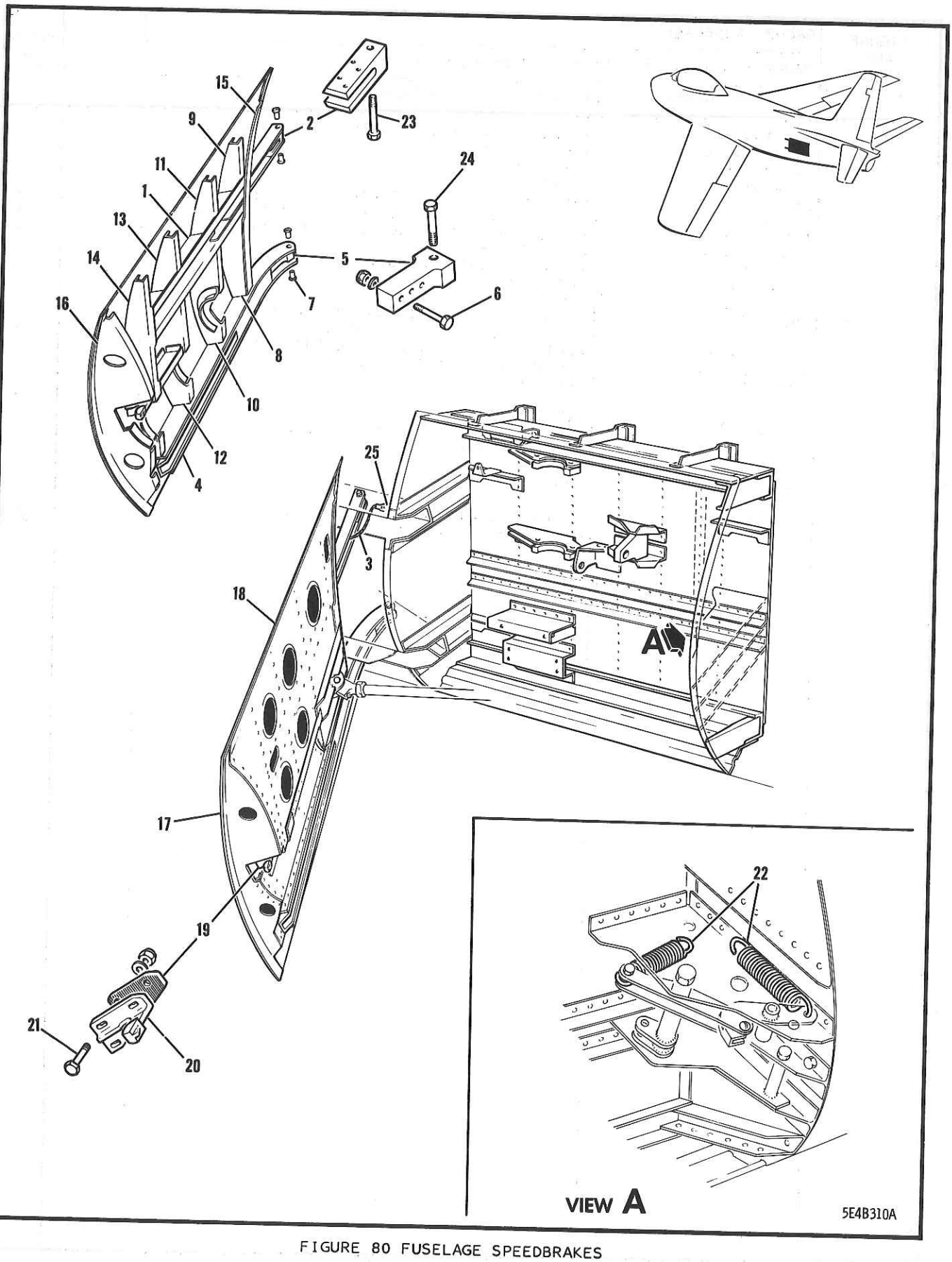

FIGURE 80 FUSELAGE SPEEDBRAKES

FIGURE AND INDEX NUMBER	GROUP / MAJOR ASSEMBLY / PART NUMBER	FUSELAGE / FUSELAGE SPEEDBRAKE / 1234567 NOMENCLATURE	CODE	UNITS PER ASSY
80 -	151-39002-1	SPEEDBRAKE INSTL - FUSELAGE PORT SIDE (SEE FIG. 73)		NP
	151-39002-2	SPEEDBRAKE INSTL - FUSELAGE STARBOARD SIDE (SEE FIG. 73)		NP
	140-39050-139	•DOOR ASSY - FUSELAGE SPEEDBRAKE PORT SIDE		1
	140-39050-140	•DOOR ASSY - FUSELAGE SPEEDBRAKE STBD SIDE		1
- 1	140-39050-121	••BEAM ASSY - SPEEDBRAKE DOOR UPPER PORT		1
	140-39050-122	••BEAM ASSY - SPEEDBRAKE DOOR UPPER STBD		1
- 2	140-39051	•••FITTING - SPEEDBRAKE UPPER HINGE PIVOT		1
- 3	6043-3-3-6	•••JUMPER - (JNI) (BONDING)		1
	AN3-4A	•••BOLT - (JUMPER ATTACHING)		1
	AN365-1032	•••NUT -		1
	AN3-6A	•••BOLT - (CLIP TO BEAM ATTACHING)		1
	AN960-10	•••WASHER -		1
	AN365-1032	•••NUT -		1
- 4	140-39050-111	••BEAM ASSY - SPEEDBRAKE DOOR LOWER PORT		1
	140-39050-112	••BEAM ASSY - SPEEDBRAKE DOOR LOWER STBD		1
- 5	140-39055	•••FITTING - SPEEDBRAKE LOWER HINGE PIVOT		1
	6043-3-4-4	•••JUMPER - (JNI) (BONDING)		1
- 6	AN4-14A	•••BOLT - (FITTING & JUMPER ATTACHING)		3
	AN960D416	•••WASHER -		3
	AN365-428	•••NUT -		3
- 7	4B16RF8-24	••BEARING - SINTERED OIL IMPREGNATED (NAA)		4
- 8	140-39050-7	••RIB - SPEEDBRAKE DOOR STA 303 LOWER PORT		1
	140-39050-8	••RIB - SPEEDBRAKE DOOR STA 303 LOWER STBD		1
- 9	140-39050-9	••RIB - SPEEDBRAKE DOOR STA 303 UPPER PORT		1
	140-39050-10	••RIB - SPEEDBRAKE DOOR STA 303 UPPER STBD		1
-10	140-39050-11	••RIB - SPEEDBRAKE DOOR STA 311 LOWER PORT		1
	140-39050-12	••RIB - SPEEDBRAKE DOOR STA 311 LOWER STBD		1
-11	140-39050-13	••RIB - SPEEDBRAKE DOOR STA 311 UPPER PORT		1
	140-39050-14	••RIB - SPEEDBRAKE DOOR STA 311 UPPER STBD		1
-12	140-39050-15	••RIB - SPEEDBRAKE DOOR STA 317 LOWER PORT		1
	140-39050-16	••RIB - SPEEDBRAKE DOOR STA 317 LOWER STBD		1
-13	140-39050-17	••RIB - SPEEDBRAKE DOOR STA 317 UPPER PORT		1
	140-39050-18	••RIB - SPEEDBRAKE DOOR STA 317 UPPER STBD		1
-14	140-39050-19	••RIB - SPEEDBRAKE DOOR STA 323 PORT SIDE		1
	140-39050-20	••RIB - SPEEDBRAKE DOOR STA 323 STBD SIDE		1
	140-39050-125	••ANGLE -		1
	140-39050-126	••ANGLE -		1
-15	140-39050-29	••WEB - SPEEDBRAKE DOOR STA 298-303 PORT		1
	140-39050-30	••WEB - SPEEDBRAKE DOOR STA 298-303 STBD		1
-16	140-39050-31	••WEB - SPEEDBRAKE DOOR STA 303-327 PORT		1
	140-39050-32	••WEB - SPEEDBRAKE DOOR STA 303-327 STBD		1
	AN7510-2	••PLATE -		1
-17	140-39050-137	••SKIN - (DOOR STA 298-327 PORT SIDE OUTER)		1
	140-39050-138	••SKIN - (DOOR STA 298-327 STBD SIDE OUTER)		1
-18	140-39050-5	••SKIN - (DOOR STA 298-327 PORT SIDE INNER)		1
	140-39050-6	••SKIN - (DOOR STA 298-327 STBD SIDE INNER)		1
-19	140-39053-3	••PLATE - SPEEDBRAKE DOOR LATCH ADJ PORT		1
	140-39053-4	••PLATE - SPEEDBRAKE DOOR LATCH ADJ STBD		1
-20	151-39025-3	••LATCH - SPEEDBRAKE DOOR LOCK PORT SIDE		1
	151-39025-4	••LATCH - SPEEDBRAKE DOOR LOCK STBD SIDE		1
-21	AN3-7A	••BOLT - (LATCH & PLATE ATTACHING)		3
	2W1AL12-16-32	••WASHER - PLAIN (NAA)		3
	AN365-1032	••NUT -		3
-22	123-53136	•SPRING - COMPRESSION		2
-23	AF85-23	•BOLT - AIRCRAFT - 5/16-24 MPI	001-300	1
	13-90015	•BOLT - SPEEDBRAKE HINGE UPPER (MAKE FROM AN175H2)	301-	1
	AN960-516	•WASHER - (UNDER HEAD)	663-	AR
	AN960-516L	•WASHER - (UNDER HEAD)	663-	AR
	151-39013	•SPACER - SPEEDBRAKE HINGE ATT (UPPER)		1

FIGURE AND INDEX NUMBER	GROUP FUSELAGE MAJOR ASSEMBLY FUSELAGE SPEEDBRAKES PART NUMBER	1234567 NOMENCLATURE	CODE	UNITS PER ASSY
80 -	AN960-516L	•WASHER -		1
	151-39002-801	•WASHER - FUSELAGE SPEEDBRAKE (UPPER HINGE)	611-	AR
	S-1236-516	•WASHER - FLAT (CAN) (UNDER HEAD)	663-	AR
	S-1236-516L	•WASHER - FLAT (CAN) (UNDER HEAD)	663-	AR
	2W1AL32-32-32	•WASHER - PLAIN (NAA)	001-300	2
	AN960-516	•WASHER -	301-	1
	S-1236-516	•WASHER - FLAT (CAN) (UNDER BUSHING)	663-	1
	2W1AL32-32-16	•WASHER - FLAT (NAA) (UNDER BUSHING)	663-	AR
	2W1AL32-32-32	•WASHER - FLAT (NAA) (UNDER BUSHING)	663-	AR
	151-39002-801	•WASHER - FUSELAGE SPEEDBRAKE (UPPER HINGE)	611-	AR
	AN364-524	•NUT -	001-300	1
	AN320-5	•NUT -	301-	1
	AN380-2-3	•COTTER-PIN -	301-	1
-24	AF85-24	•BOLT - AIRCRAFT - 5/16-24 MPI	001-300	1
	AN175H26	•BOLT - (HINGE PIVOT)	301-	1
	151-39013	•SPACER - SPEEDBRAKE HINGE ATT (LOWER)		1
	AN960D516	•WASHER -	001-300	1
	AN960-516	•WASHER -	301-	1
	AN960-516L	•WASHER -	301-	1
	151-39002-801	•WASHER - FUSELAGE SPEEDBRAKE (LOWER HINGE)	611-	AR
	2W1AL32-32-16	•WASHER - PLAIN (NAA)	663-	AR
	2W1AL32-32-32	•WASHER - PLAIN (NAA)	663-	AR
	AN365-524	•NUT -	001-300	1
	AN310-5	•NUT -	301-	1
	AN380-2-3	•COTTER-PIN -	301-	1
-25	AN3-4A	•BOLT - (JUMPER TO FUSELAGE ATTACHING)		2
	AN365-1032	•NUT -		2

-000-

SECTION 4

LANDING GEAR

TABLE OF CONTENTS

FIGURE	TITLE	PAGE
81	NOSE LANDING GEAR	430
82	NOSE LANDING GEAR CHASSIS	432
83	NOSE LANDING GEAR SHOCK STRUT	436
84	NOSE LANDING GEAR TRUNNION	440
85	NOSE LANDING GEAR DRAG BRACE	442
86	NOSE LANDING GEAR STEERING MECHANISM	446
87	NOSE LANDING GEAR STEERING PULLEY	450
88	NOSE LANDING GEAR STRUT DOOR	454
89	NOSE LANDING GEAR WHEEL DOOR	458
90	NOSE LANDING GEAR & DOOR UPLATCH	460
91	NOSE LANDING GEAR & DOOR UPLATCH	466
92	MAIN LANDING GEAR	470
93	MAIN LANDING GEAR CHASSIS	474
94	MAIN LANDING GEAR INDICATING & SEQUENCING MECHANISM	478
95	MAIN LANDING GEAR STRUT	480
96	MAIN LANDING GEAR WHEEL DOOR	484
97	MAIN LANDING GEAR WHEEL DOOR MECHANISM	488
98	MAIN LANDING GEAR FITTINGS	492
99	MAIN LANDING GEAR TRUNNION FITTING	496
100	LANDING GEAR EMERGENCY RELEASE	500
101	LANDING GEAR WING SECTION EMERGENCY RELEASE (EFFECTIVE AIRCRAFT 23201 & SUBS)	506

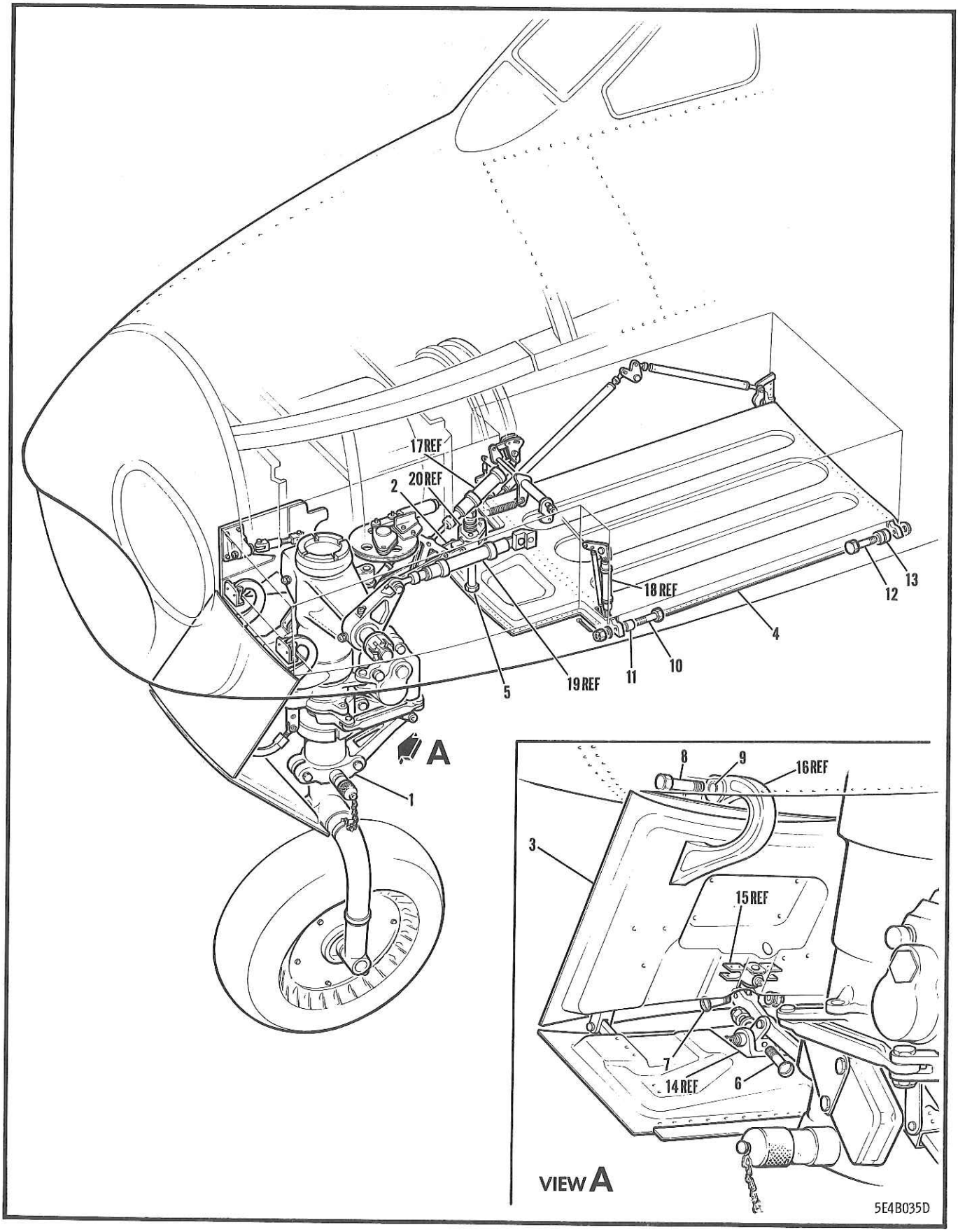

FIGURE 81 NOSE LANDING GEAR

FIGURE AND INDEX NUMBER	GROUP / MAJOR ASSEMBLY / PART NUMBER	LANDING GEAR / NOSE LANDING GEAR / 1234567 NOMENCLATURE	CODE	UNITS PER ASSY
81 -	151-34001-10	GEAR INSTL - NOSE LANDING (SEE SECTION 3)		NP
- 1	151-34101-105	•CHASSIS ASSY - NOSE LDG GEAR (SEE FIG. 82)		REF
- 2	151-34141	•BRACE ASSY - NOSE LANDING GEAR DRAG (SEE FIG. 85)		REF
- 3	151-34380-10	•DOOR ASSY - NOSE LANDING GEAR STRUT (SEE FIG. 88)		REF
- 4	140-34301	•DOOR ASSY - N/LDG/GR WHEEL (SEE FIG. 89)		REF
- 5	AN179-31	•BOLT - (DRAG LINK TO FITTING ATT)		1
	AN960-916	•WASHER -		3
	AN310-9	•NUT -		1
	AN380-4-4	•COTTER-PIN -		1
- 6	AN23-14	•BOLT - (STRUT DOOR ACTE LINK TO SUP. ATT)	001-100	1
	AN23-15	•BOLT - (STRUT DOOR ACTE LINK TO SUP. ATT)	101-	1
	AN960D10	•WASHER -		1
	AN320-3	•NUT -		1
	AN380-2-2	•COTTER-PIN -		1
- 7	AN23-16	•BOLT - (STURT DOOR ACTE LINK TO SUP. ATT)		1
	AN960-10	•WASHER -		1
	AN310-3	•NUT -		1
	AN380-2-2	•COTTER-PIN -		1
- 8	AN3-13A	•BOLT - (DOOR FITTING TO SUPPORT ATT)		2
- 9	151-34363	•SPACER - N/LDG/GR STRUT FORWARD DOOR HINGE		2
	AN960D616L	•WASHER -		AR
	AN960D10	•WASHER -		2
	AN365-1032	•NUT -		2
-10	AN4H16	•BOLT - MPI (NOSE WHEEL DOOR FWD HINGE ATT) (AS PER EO 05-5E-6A-162)		1
-11	NAS72-4-014	•BUSHING -		1
	AN960A416	•WASHER -		1
	AN310-4	•NUT -		1
	AN380-2-3	•COTTER-PIN -		1
-12	AN4H-16A	•BOLT - (NOSE WHEEL DOOR REAR HINGE ATT)		1
-13	NAS72-4-015	•BUSHING -	A8	1
	NAS72-4-014	•BUSHING -	021-201	1
	AN960A416	•WASHER -		1
-14	151-34371	SUPPORT ASSY - N/LDG/GR STRUT REAR DOOR ACTE (SEE FIG. 88)		REF
-15	151-34359	SUPPORT ASSY - N/LDG/GR STRUT FWD DOOR ACTE LINK ATT (SEE FIG. 88)		REF
-16	151-34354	FITTING ASSY - N/LDG/GR STRUT FWD DOOR HNG (SEE FIG. 88)		REF
-17	151-58630-10	CYLINDER ASSY - HYDRAULIC NOSE GEAR OPR (SEE SECTION 11)		REF
-18	151-58645-3	CYLINDER ASSY - HYDRAULIC NOSE WHEEL FAIRING DOOR OPR (SEE SECTION 11)		REF
-19	151-58633-9	CYLINDER ASSY - NOSE GEAR EXTENSION (SEE SECTION 11)		REF
-20	152-34161	FITTING ASSY - N/LDG/GR DRAG BRACE FUS ATT (SEE FIG. 90)		REF
		(CONTINUED SEE FIG. 86)		

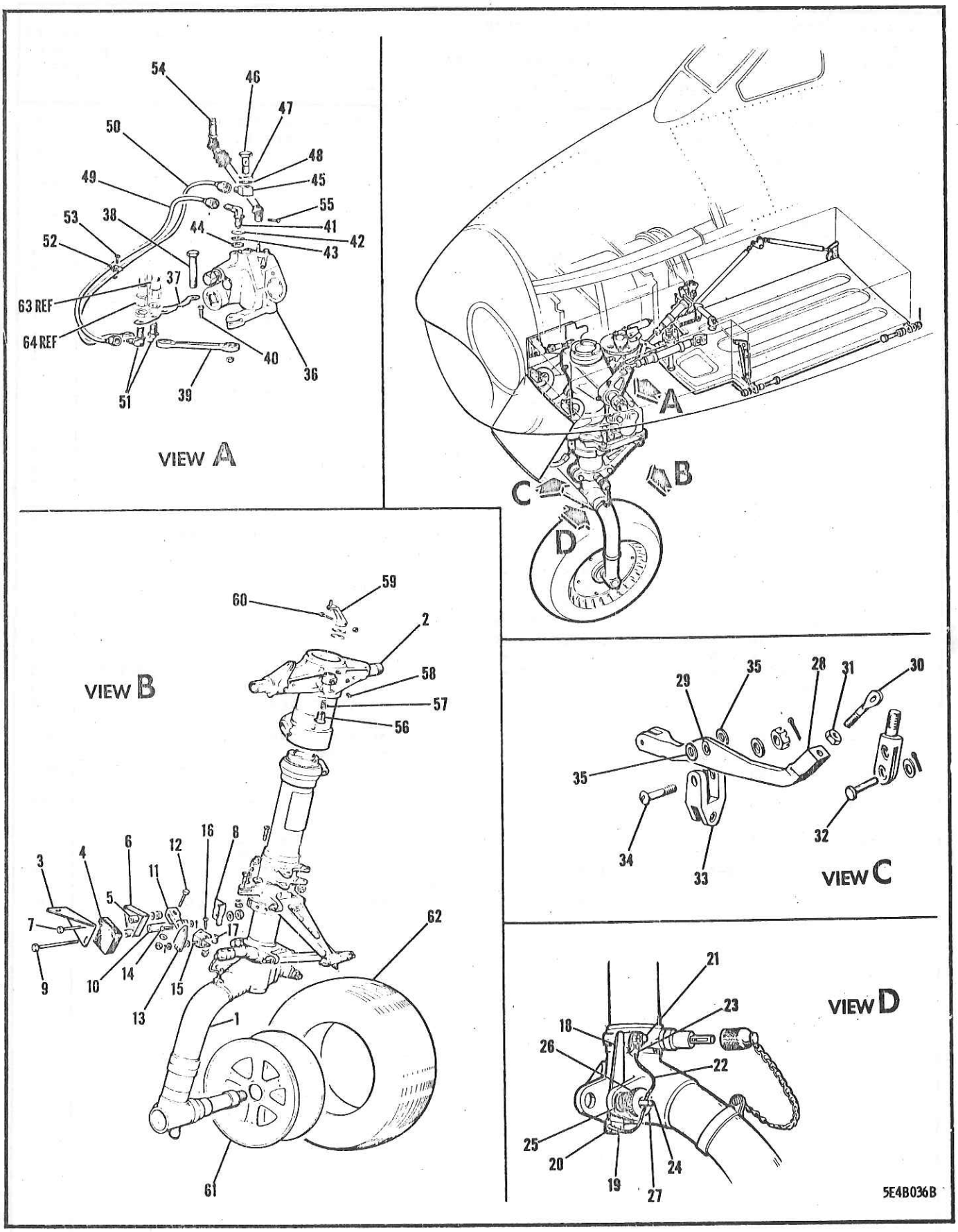

FIGURE 82 NOSE LANDING GEAR CHASSIS

FIGURE AND INDEX NUMBER	GROUP LANDING GEAR MAJOR ASSEMBLY NOSE LANDING GEAR CHASSIS PART NUMBER	1234567 NOMENCLATURE	CODE	UNITS PER ASSY
82 -	151-34101-105	CHASSIS ASSY - NOSE GEAR (SEE FIG. 81)		1
- 1	9152	•STRUT ASSY - NOSE GEAR SHOCK (SEE FIG. 83)		REF
- 2	140-34111-205	•TRUNNION ASSY - NOSE GEAR (SEE FIG. 84)		REF
	176-34801-800	•SEQUENCE & INDICATING MECHANISM INSTL - NOSE GEAR		NP
	176-34830	••SAFETY MECHANISM ASSY - NOSE GR STEERING		1
- 3	176-34833	•••BRACKET - NOSE GEAR STEERING SAFETY MECH LH OUTBOARD SUPPORT		1
- 4	1HA1RH	•••MICROSWITCH - (MSC)		1
- 5	NAS43DD3-24	•••SPACER -		1
- 6	176-34832	•••BRACKET - NOSE GEAR STEERING SAFETY MECH LH INBOARD SUPPORT		1
- 7	AN3-20A	•••BOLT -		1
	AN960D10L	•••WASHER -		1
	AN365-1032	•••NUT -		1
- 8	176-34831	•••BRACKET - NOSE GEAR STEERING SAFETY MECH SUPPORT		1
- 9	AN3-46A	•••BOLT -		1
	NAS43DD3-24	•••SPACER -		1
-10	NAS43DD3-174	•••SPACER -		1
	AN960D10L	•••WASHER -		1
	AN365-1032	•••NUT -		1
-11	176-34834	•••ARM - NOSE GEAR STEERING SAFETY MECH		1
-12	AN4-7A	•••BOLT -		1
	AN960D416L	•••WASHER -		1
	AN365-428	•••NUT -		1
-13	176-34835-3	•••LINK - NOSE GEAR STEERING SAFETY MECH		1
-14	AN393-11	•••PIN -		1
	AN960D10L	•••WASHER -		1
	AN380-2-2	•••COTTER-PIN -		1
-15	151-54413	•••BRACKET ASSY - NOSE WHEEL STEER. SAF SW	001-370	1
	151-54413-10	•••BRACKET ASSY - NOSE WHEEL STEER. SAF SW	371-	1
	AN960D6	•••WASHER -		3
	AN380-2-1	•••COTTER-PIN -		1
-16	AN515-6R18	••SCREW -		2
-17	NAS43C1-20	••SPACER -		4
	AN365-632	••NUT -		2
	165-34688-10	•RELEASE ASSY - NOSE GEAR TOW BAR SWIVEL		1
	165-34689	••WEDGE ASSY - NOSE GEAR TOW BAR SWIVEL		1
-18	165-34689-3	•••PLATE - NOSE GEAR TOW BAR WEDGE		1
-19	165-34689-5	•••PLATE - NOSE GEAR TOW BAR WEDGE		1
-20	AN742-5	•••CLAMP -		1
-21	165-34694	••CLIP - NOSE GEAR SWIVEL TOW WEDGE		1
-22	165-34688-3	••CABLE - NOSE GEAR TOW BAR SWIVEL RELEASE		1
-23	RA-2487-2	••TERMINAL - PLAIN BALL SWAGED (ACC)		2
	165-34695-10	••SHAFT ASSY - NOSE GEAR SWIVEL TOW WEDGE		1
-24	165-34691-10	•••LOCK-SHAFT - NOSE GEAR TOW WEDGE		1
	165-34692	•••PIN - NOSE GEAR SWIVEL TOW WEDGE		1
-25	2W1-24-24-032	•••WASHER - PLAIN (NAA)		1
-26	165-52420	•••SPRING - RUDDER CONTROL PEDAL ENGAGING		1
-27	165-34690-10	•••KNOB - NOSE GEAR SWIVEL TOW WEDGE		1
	165-34697	•••SWIVEL - NOSE GEAR TOW BAR		1
	165-34695-3	•••PIN - NOSE GEAR SWIVEL TOW SHAFT		1
	151-34356	•LINK ASSY - STRUT FORWARD DOOR ACTUATOR		1
	151-34357	••LINK ASSY - STRUT FWD DOOR ACTUATOR		1
-28	151-34357-3	•••LINK - STRUT FWD DOOR ACTUATOR MPI		1
-29	HSB3S	•••BEARING - (HEC)		1
-30	151-34364	••ROD-END ASSY - DOOR ACTUATOR LINK MPI		1
-31	AN316-6R	••CHECK-NUT -		1
-32	AN394-21	•PIN - MPI		1

FIGURE AND INDEX NUMBER	GROUP LANDING GEAR MAJOR ASSEMBLY NOSE LANDING GEAR CHASSIS PART NUMBER	1234567 NOMENCLATURE	CODE	UNITS PER ASSY
82 -	AN960D416L	•WASHER -		1
	AN380-2-2	•COTTER-PIN -		1
-33	151-34369	•LINK ASSY - NOSE GEAR REAR DOOR ACTUATOR		1
	4B16CP3-6	••BEARING - SINTERED OIL IMPREGNATED (NAA)		2
-34	AN23-21	•BOLT - MPI		1
-35	4S3-10-5	•SPACER - BOLT (NAA)		2
	AN960D10	•WASHER -		1
	AN320-3	•NUT -		1
	AN380-2-2	•COTTER-PIN -		1
-36	2022	•DAMPER ASSY - STEER (HES) OR		1
	4044	•DAMPER ASSY - STEER (HES)		
-37	151-58504	•BRACKET - HYDRAULIC NOSE GEAR STEERING HOSE SUPPORT		1
-38	AN7-26A	•BOLT - MPI		2
	2W18-716M	•WASHER - FLAT (NAA)		AR
	AN365-720	•NUT -		2
-39	151-34103	•LINK ASSY - NOSE GEAR SHIMMY DAMPER		1
	AT-4	••NEEDLE-BEARING - AIRCRAFT (TOR)		2
-40	AN4-11A	•BOLT -		2
	AN365-428	•NUT -		2
-41	AN833-4	•ELBOW -		1
-42	AF46A1650-4	•WASHER - LEATHER BACK-UP	001-370	1
	AN6290-4	•GASKET -	371-	1
-43	AN622787	•PACKING -		1
-44	1N5-4D	•NUT - BULKHEAD FITTING (NAA)	001-370	1
	AN6289D4	•NUT -	371-	1
-45	151-58524	•ELBOW - HYDRAULIC UNIVERSAL 90-DEG		1
-46	151-58525	•BOLT - HYDRAULIC UNIVERSAL		1
-47	AN6227-6	•PACKING -		1
-48	AN6227-7	•PACKING -		1
-49	151-58825-65	•LINE ASSY - PRESSURE SHIMMY DAMPER TO HOSE		1
-50	151-58825-63	•LINE ASSY - RETURN SHIMMY DAMPER TO HOSE		1
-51	AN833-4	•ELBOW -		2
	AN924-4D	•NUT -		2
-52	AN742-4D	•CLAMP -		2
-53	AN520-10R8	•SCREW -		1
	AN365-1032	•NUT -		1
-54	UJ214	•TUBE ASSY - (AMT) (NOSE GEAR STEERING)		1
-55	AN503-6-4	•SCREW -		1
-56	151-34652	•RETAINER - STEERING CENTRING SPRING		1
-57	176-34669	•SPRING - STEERING SHAFT CENTRING		1
-58	AN565C10-8	•SCREW -		1
	AN960C816	•WASHER -	001-370	AR
	AN960D816	•WASHER -	371-	AR
	AN960D816C	•WASHER -	001-370	AR
	AN960D816L	•WASHER -	371-	AR
	AN340-10	•NUT -		1
-59	165-34749-3	•ARM - STEERING DAMPER DRIVE-SHAFT ACTUATOR		1
-60	AN3-11A	•BOLT -		1
	AN365-1032	•NUT -		1
-61	SPEC AN-W-6	•WHEEL ASSY - 22 X 7.25 X 11.50 (G.F.E.) OR		1
	147912	•WHEEL ASSY - 22 X 7.25 X 11.50 (G.F.E.)		
-62	MIL-C5041	•CASING - 6-PLY NYLON TYPE V1 22 X 7.25 X 11.50 (G.F.E.)		1
	AN-I-14	•TUBE - TYPE V1 CLASS Z 22 X 7.25 X 11.50 (G.F.E.)		1
-63	3H3-4-0174	HOSE ASSY - PLASTIC COVERED (NAA) (SEE SECTION 11)		REF
-64	3H3-4-0200	HOSE ASSY - PLASTIC COVERED (NAA) (SEE SECTION 11)		REF

-000-

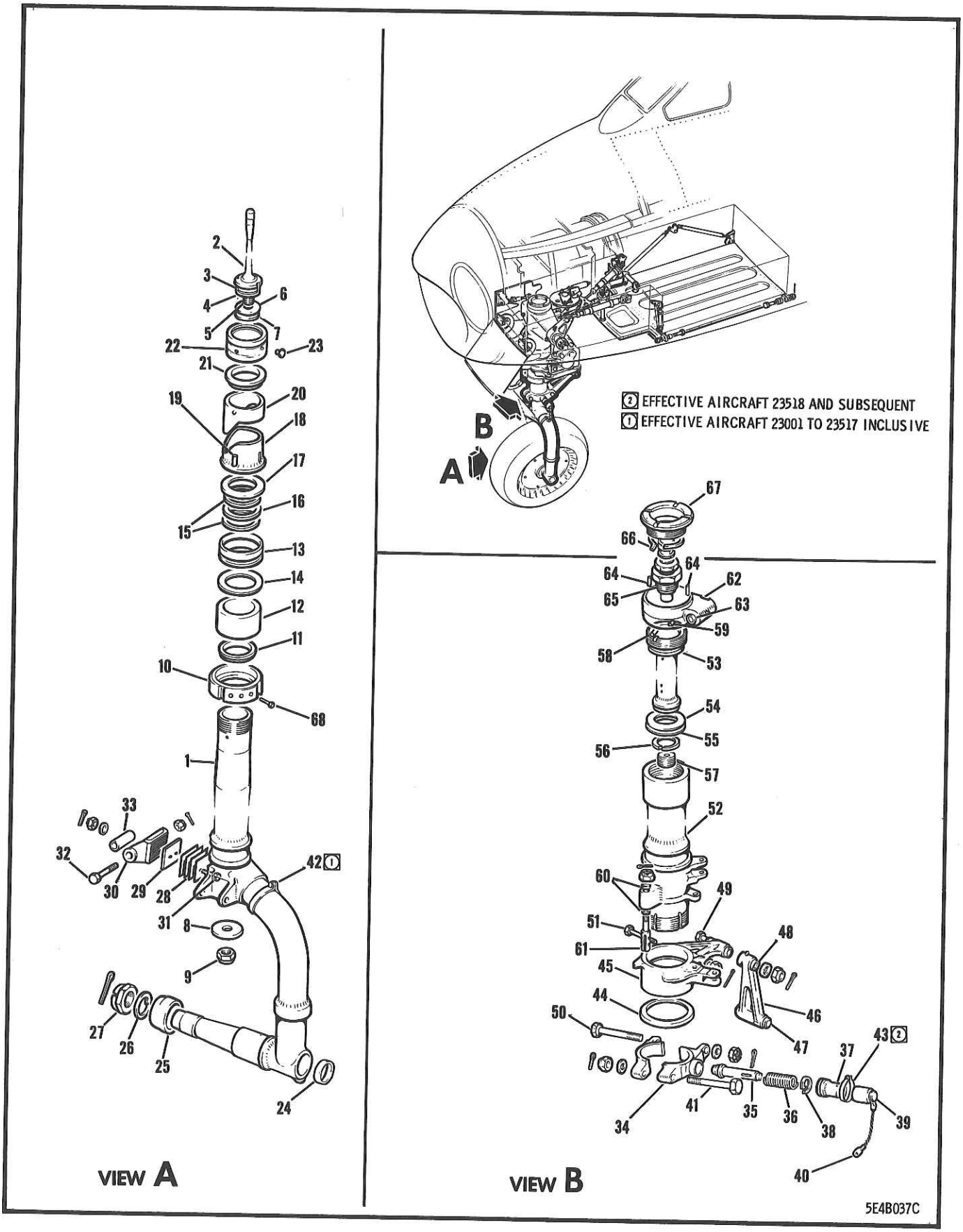

FIGURE 83 NOSE LANDING GEAR SHOCK STRUT

FIGURE and INDEX NUMBER	PART NUMBER	1 2 3 4 5 6 7 NOMENCLATURE	Units Per Assy	Usage on Code
	GROUP	LANDING GEAR		
	MAJOR ASSEMBLY	NOSE LANDING GEAR SHOCK STRUT		
83 -	9152	Strut Assembly - Nose gear shock (See Figure 82)		1
	9152-104	Piston Assembly - Nose gear shock strut		1
-1	9148-4	Piston - Nose gear fork & axle		1
		or		
	9148-4-950	Piston - Nose gear fork & axle (has .020" oversize hole for 8656-165-950 yoke assembly)		1
-2	9152-13	Pin Assembly - Metering		1
-3		Deleted		
-4		Deleted		
-5		Deleted		
-6	AN6246-25	Ring -		1
-7	AN6227B25	Packing -		1
-8	9148-55	Plate - Metering pin retaining		1
-9	AN365D820	Nut -		1
-10	8656-48	Gland-Nut -		1
-11	AN6231A24	Scraper -		1
-12	9148-9	Bearing - Packing		1
-13	8656-54	Adapter - Packing		1
-14	AN6227B37	Packing -		1
-15	AN6246-35	Ring -		2
-16	AN6227B35	Packing -		1
-17	8656-6A	Spacer - Packing		1
	8656-110A	Follower Assembly - Piston		1
-18	8656-10A	Follower - Piston		1
-19	8656-81	Key - Follower		1
-20	8656-91A	Cam - Centring		1
-21	8656-5	Recoil - Valve		1
-22	8656-3A	Head - Piston		1
-23	139-9	Pin - Piston head		1
-24	9148-94	Dust-Cap -		1
-25	34A15-2	Collar - Nose gear axle		1
-26	AN7503-23	Washer -		1
-27	AN7502-23	Nut -		1
	AN380-4-8	Cotter-Pin -		1
-28	8656-90	Shim - Laminated		4
-29	8656-92	Plate - Serrated		1
-30	8656-82	Bracket - Uplock		1
-31	NAS464P3-13	Bolt - (As per EO 05-5E-6A/91)		2
	AN960-10	Washer -		2
	AN310-3	Nut -		2
	AN380-2-2	Cotter-Pin -		2
-32	8656-93	Bolt - Roller to bracket		1
-33	8656-188	Roller Assembly - Uplock		1
	AN310-4	Nut -		1
	AN380-2-2	Cotter-Pin -		1

FIGURE and INDEX NUMBER	PART NUMBER	1 2 3 4 5 6 7 NOMENCLATURE	Units Per Assy	Usage on Code
	GROUP LANDING GEAR			
	MAJOR ASSEMBLY NOSE LANDING GEAR SHOCK STRUT			
83 -33	8656-165	Yoke Assembly - Piston torque		1
	8656-165-950	Yoke Assembly - Piston torque		1
-34	8656-65B	Yoke - Piston torque		1
	8656-65B-950	Yoke - Piston torque (for use with 9148-4-950 piston)		1
-35	8656-66	Lock - Pin		1
	8656-66-950	Lock - Pin (for use with 9148-4-950 piston)		1
-36	8656-25	Spring - MP1		1
-37	8656-67	Housing - Spring lock		1
-38	8656-70	Locking-Ring -		1
	8656-171	Cap Assembly - Lock retaining		1
-39	8656-71	Cap - Lock retaining		1
	AN960-6	Washer -		2
-40	Commercial	Safety-Chain - No. 2 brass 4 to 4-3/16 in. lg.		1
	8656-72	Pin - Lock retaining		1
-41	AN6-22	Bolt -		1
	AN960-616	Washer -		1
	AN310-6	Nut -		1
	AN380-3-3	Cotter-Pin -		1
-42	AN735-36	Clamp - (As per EO 05-5E-6A/88)	001-517	1

FIGURE AND INDEX NUMBER	GROUP LANDING GEAR MAJOR ASSEMBLY NOSE LANDING GEAR SHOCK STRUT PART NUMBER	1234567 NOMENCLATURE	CODE	UNITS PER ASSY
83 -43	AN735D16	•CLAMP -	518-	1
	AN500-10-10	•SCREW -		1
	AN960D10	•WASHER -	518-	1
	AN365-1024	•NUT -		1
-44	8656-64	•WASHER - TORQUE YOKE		2
-45	8656-33A	•YOKE - TORQUE		1
	8656-146	•TORQUE ARM ASSY - COMPLETE		1
	8656-46	••TORQUE ARM ASSY - (NOSE GEAR STRUT)		2
-46	8656-46-1	•••TORQUE ARM - (NOSE GEAR STRUT)		1
-47	8656-51	•••BUSHING - TORQUE ARM END		2
-48	8656-53	•••BUSHING - TORQUE ARM CENTRE		2
-49	8656-83	••BOLT - TORQUE ARM CENTRE		1
	AN960-616	••WASHER -		1
	AN310-6	••NUT -		1
	AN380-3-3	••COTTER-PIN -		1
-50	9034-84	•BOLT - TORQUE ARM END UPPER		1
-51	9034-85	•BOLT - TORQUE ARM END LOWER		1
	AN960-616	•WASHER -		2
	AN310-6	•NUT -		2
	AN380-3-3	•COTTER-PIN -		2
	AN944-101	•FITTING -		7
	9148-102	•CYLINDER ASSY - STRUT		1
-52	9148-2	••CYLINDER - STRUT		1
	9148-126A	••PLUNGER ASSY - CYLINDER		1
-53	9148-26A	•••TUBE ASSY - PLUNGER		1
		OR		
	9148-26	•••TUBE ASSY - PLUNGER		
-54	AN6227B35	•••PACKING -		1
-55	AN6246-35	•••RING -		1
-56	9148-270	•••RING - PLUNGER HEAD		1
-57	9148-23A	•••PLUNGER - ORIFICE		1
		OR		
	9148-23	•••PLUNGER - ORIFICE		
-58	8656-45	••PLUG - LOCKING		1
-59	AN501A5-5	••SCREW -		1
-60	8656-78A	••BUSHING -		2
-61	8656-79A	•STUD - DOOR		1
	AN310-6	•NUT -		1
	AN380-3-3	•COTTER-PIN -		1
-62	9034-74	•YOKE - MOUNTING		1
-63	8656-75	•BUSHING - MOUNTING		1
-64	9034-68A	•KEY - MOUNTING YOKE		2
-65	AN6287-1	•VALVE - 3/4 HEX HIGH PRESSURE AIR		1
-66	8656-77	•LOCK-RING -		1
-67	8656-76	•RING - MOUNT YOKE RETAINER		1
-68	AN501A416-6	•SCREW -		1
	AN501A416-5	•SCREW -		1
	13-71054	•NAME-PLATE - LANDING GEAR		1
	EQ1009D	•PLATE - NAME & INSTRUCTION		1
		-000-		

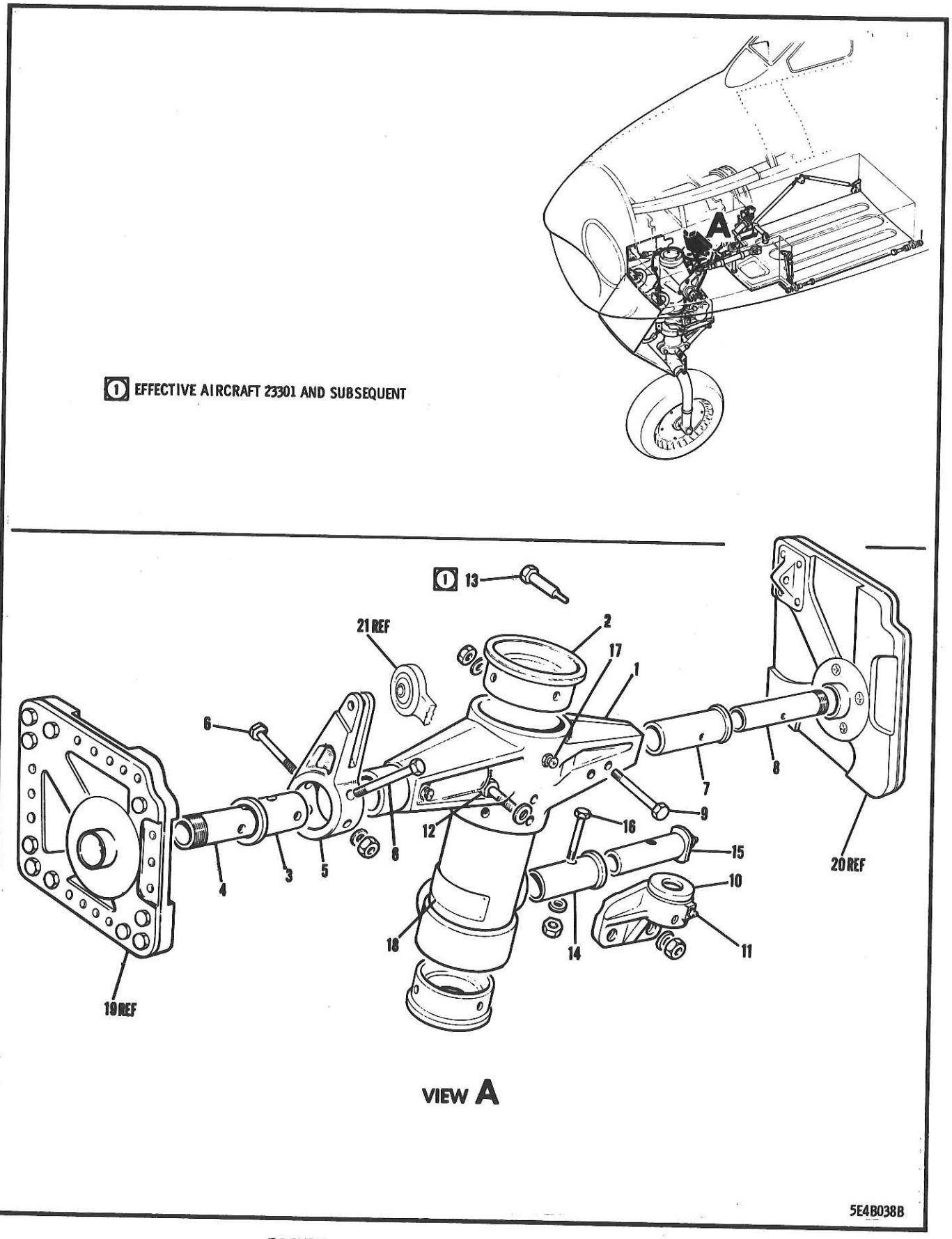

FIGURE 84 NOSE LANDING GEAR TRUNNION

FIGURE AND INDEX NUMBER	GROUP LANDING GEAR MAJOR ASSEMBLY NOSE LANDING GEAR TRUNNION PART NUMBER	1234567 NOMENCLATURE	CODE	UNITS PER ASSY
84 -	140-34111-205	TRUNNION ASSY - NOSE GEAR (SEE FIG. 82)	001-300	1
	140-34111-405	TRUNNION ASSY - NOSE GEAR	301-	1
- 1	151-34112-11	.FITTING - NOSE GEAR TRUNNION	001-300	1
	151-34112-15	.FITTING - NOSE GEAR TRUNNION	301-	1
- 2	151-34116	.BEARING - NOSE GEAR TRUNNION MPI		2
- 3	140-34113-3	.BUSHING - NOSE GEAR TRUNNION MPI		1
- 4	140-34125	.PIN - NOSE GEAR TRUNNION SUPPORT LH MPI		1
- 5	165-34510-3	.ARM - NOSE GEAR EXTN CYL TRUNNION ACTUATOR		1
- 6	AN5-31A	.BOLT -		2
	AN960A516	.WASHER -		2
	AN365-524	.NUT -		2
- 7	140-34113-4	.BUSHING - NOSE GEAR TRUNNION MPI		1
- 8	140-34126	.PIN - NOSE GEAR TRUNNION SUPPORT RH MPI		1
- 9	AN4-25A	.BOLT -		1
	AN960A416L	.WASHER -		1
	AN365-428	.NUT -		1
	151-34651	.FITTING ASSY - NOSE GEAR STEERING		1
-10	151-34674	..BUSHING - NOSE GEAR STEER. SUP. FTG MPI		1
-11	NAS2-101	..FITTING -		1
-12	AN3-7A	.BOLT - MPI	001-300	3
-13	13-71059	.BOLT - NOSE GEAR FITTING	301-	3
	2W1-12-14-031	.WASHER - PLAIN (NAA)	001-300	3
	RBA-143-16	.BOLT - CLINCH (ROS)	301-	3
	AN960-10	.WASHER -		3
	AN365-1032	.NUT -		3
-14	140-34114	.BUSHING - NOSE GEAR DRAG BRACE ATT MPI		1
-15	165-34530	.PIN ASSY - NOSE GEAR DRAG BRACE ATT MPI		1
	NAS2-101	..FITTING -		1
-16	AN4-21A	.BOLT -		1
	AN960A416L	.WASHER -		1
	AN365-428	.NUT -		1
-17	NAS2-101	.FITTING -		4
-18	140-34117	.PLATE - NOSE GEAR STRUT INSTRUCTION DATA		1
	AN535-00-2	.SCREW -		4
-19	152-34121-7	FITTING ASSY - NOSE GEAR TRUNNION LH (SEE SECTION 3)		REF
-20	152-34121-9	FITTING ASSY - NOSE GEAR TRUNNION RH (SEE SECTION 3)		REF
-21	151-58633-9	CYLINDER ASSY - HYDRAULIC NOSE GEAR EXTN (SEE SECTION 11)		REF

-000-

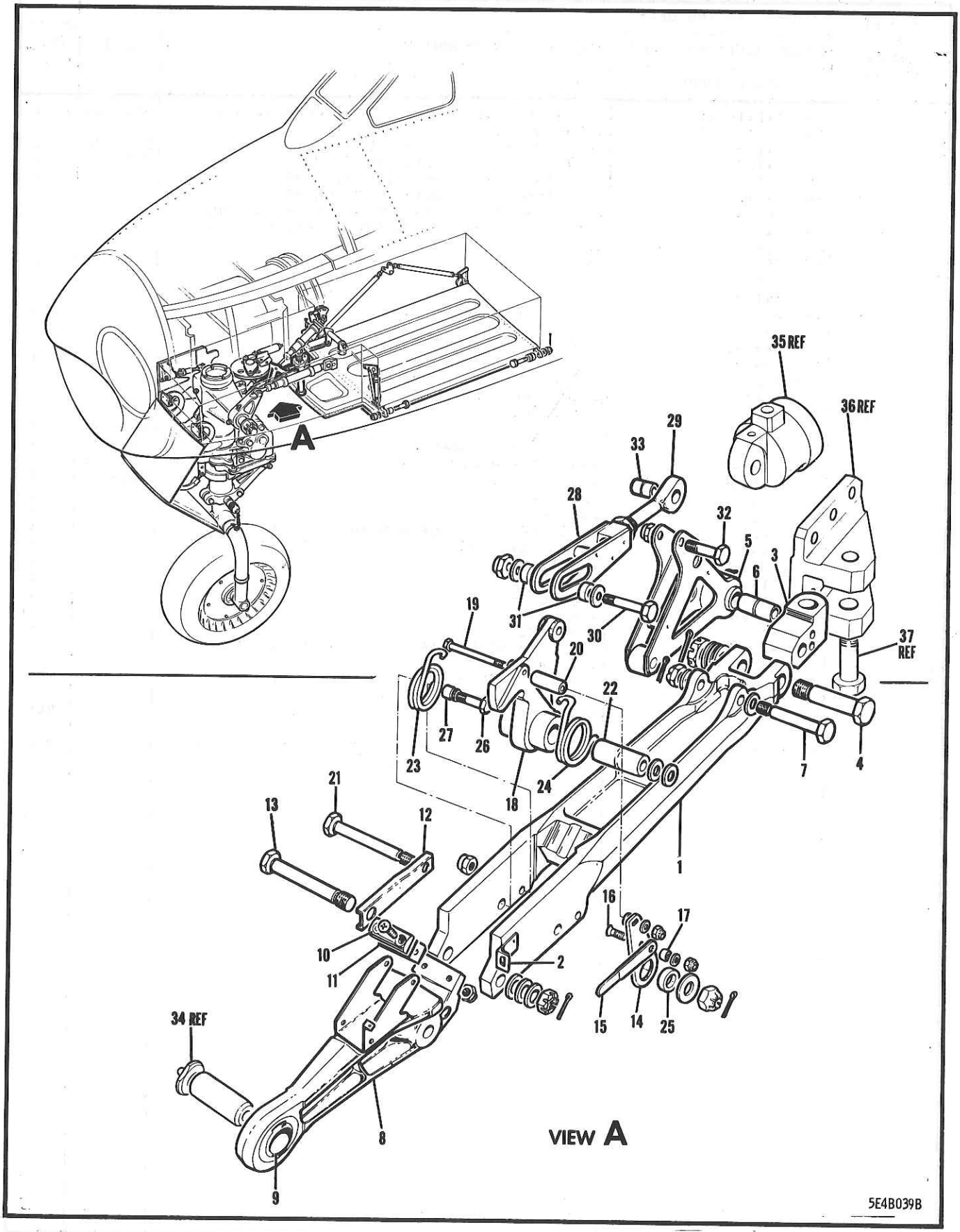

FIGURE 85 NOSE LANDING GEAR DRAG BRACE

FIGURE AND INDEX NUMBER	GROUP LANDING GEAR MAJOR ASSEMBLY NOSE LANDING GEAR DRAG BRACE PART NUMBER	1234567 NOMENCLATURE	CODE	UNITS PER ASSY
85 -	151-34141	BRACE ASSY - NOSE GEAR DRAG (SEE FIG. 81)		1
	151-34143-5	•LINK ASSY - NOSE GEAR DRAG		1
- 1	151-34143-3	••LINK - NOSE GEAR DRAG		1
- 2	151-54161	••GUIDE - NOSE GEAR DOWN POSITION INDICATOR SWITCH PLUNGER		1
	140-34147	•UNIVERSAL ASSY - NOSE GEAR DRAG BRACE MPI		1
- 3	140-34147-3	••UNIVERSAL - NOSE GEAR DRAG BRACE MPI		1
	NAS2-101	••FITTING -		1
- 4	165-34529	•BOLT - NOSE GEAR DRAG BRACE UNIV/J MPI		1
	AN960-816	•WASHER -		1
	AN960-816L	•WASHER -		2
	AN320-8	•NUT -		1
	AN380-3-3	•COTTER-PIN -		1
- 5	151-34145	•BELL-CRANK ASSY - NOSE GR DRAG BRACE RETR		1
	NAS2-201	••FITTING -		1
- 6	NAS72-6-104	•BUSHING -		1
- 7	AN6-22	•BOLT -		1
	AN960-616	•WASHER -		1
	AN960-616L	•WASHER -		1
	AN310-6	•NUT -		1
	AN380-3-3	•COTTER-PIN -		1
	151-34142-5	•LINK ASSY - NOSE GEAR FORWARD DRAG MPI		1
- 8	151-34142-3	••LINK - NOSE GEAR FORWARD DRAG MPI		1
- 9	117-33144	••BEARING ASSY - MAIN LANDING GR SIDE BRACE OUTBOARD LINK MPI		1
	NAS2-101	••FITTING -		1
-10	140-34149	•BLOCK - NOSE GEAR EXTENDED LOCK BEARING		AR
-11	140-34150-3	•SHIM - NOSE GEAR EXTENDED LOCK BRG BLOCK		AR
	140-34150-5	•SHIM - NOSE GEAR EXTENDED LOCK BRG BLOCK		AR
	140-34150-7	•SHIM - NOSE GEAR EXTENDED LOCK BRG BLOCK		2
	NAS205-16	•SCREW -		2
	AN365-1032	•NUT -		1
-12	151-34144	•RETAINER - NOSE GEAR DRAG BRACE PIVOT BOLT		1
-13	165-34528	•BOLT - NOSE GEAR DRAG BRACE KNUCKLE JOINT		1
	AN960-716	•WASHER -		2
	AN960-716L	•WASHER -		1
	AN320-7	•NUT -		1
	AN380-3-3	•COTTER-PIN -		1
-14	151-54162	•ARM - NOSE GEAR DOWN POSN IND SWITCH ACTE		1
-15	151-54081-3	•PLUNGER - NOSE GEAR DOWNLOCK IND SWITCH		1
-16	AN507-832-10	•SCREW -		1
-17	4S4-5-5	•SPACER - RIVET (NAA)		1
	AN960-8	•WASHER -		1
	AN365-832	•NUT -		1
	165-34525-5	•LOCK ASSY - NOSE GEAR EXTENDED MPI		1
-18	165-34525-3	••LOCK - NOSE GEAR EXTENDED MPI		1
	NAS2-101	••FITTING -		1
-19	AN3-20A	•BOLT -		1
-20	4S4D6-30	•SPACER - RIVET (NAA)		2
	AN960-10	•WASHER -		1
	AN365-1032	•NUT -		1
-21	AN6-27	•BOLT -		1
-22	NAS72-6-108	•BUSHING -		1
-23	151-34636	•SPRING - NOSE GEAR EXTENDED LOCK LH		1
-24	151-34637	•SPRING - NOSE GEAR EXTENDED LOCK RH		1
	2W1C24-32-2	•WASHER - PLAIN (NAA)		AR
	2W1C24-32-5	•WASHER - PLAIN (NAA)		AR
-25	4S3-616-4	•SPACER - BOLT (NAA)		1
	2W1-24-30-40	•WASHER - PLAIN (NAA)		1
	AN310-6	•NUT -		1

FIGURE AND INDEX NUMBER	GROUP LANDING GEAR MAJOR ASSEMBLY NOSE LANDING GEAR DRAG BRACE PART NUMBER	1234567 NOMENCLATURE	CODE	UNITS PER ASSY
85 -	AN380-3-3	•COTTER-PIN -		1
-26	AN3-7A	•BOLT -		2
	2W1-12-20-31	•WASHER - PLAIN (NAA)		2
-27	4S3-10-6	•SPACER - BOLT (NAA)		2
	AN365-1032	•NUT -		2
-28	140-34146	•ROD ASSY - NOSE GEAR DRAG BRACE RETR MPI		1
-29	AN165-125RL	••EYE -		1
	AN316-7R	••CHECK-NUT -		1
-30	AN4-14A	•BOLT -		1
	2W1-17-20-63	•WASHER - PLAIN (NAA)		2
-31	140-34155	•SPACER - NOSE GEAR DRAG BRACE RETR ROD MPI		2
	AN365-428	•NUT -		1
-32	AN4-12A	•BOLT -		1
-33	NAS72-4-010	•BUSHING -		1
	AN365-428	•NUT -		1
-34	165-34530	PIN ASSY - NOSE GEAR DRAG BRACE ATT MPI (SEE FIG. 84)		REF
-35	151-58630-10	CYLINDER ASSY - NOSE GEAR OPR COMPENSATOR (SEE SECTION 11)		REF
-36	152-34161	FITTING ASSY - NOSE GEAR DRAG BRACE FUS ATT (SEE FIG. 90)		REF
-37	AN179-31	BOLT - (SEE FIG. 81)		REF

-000-

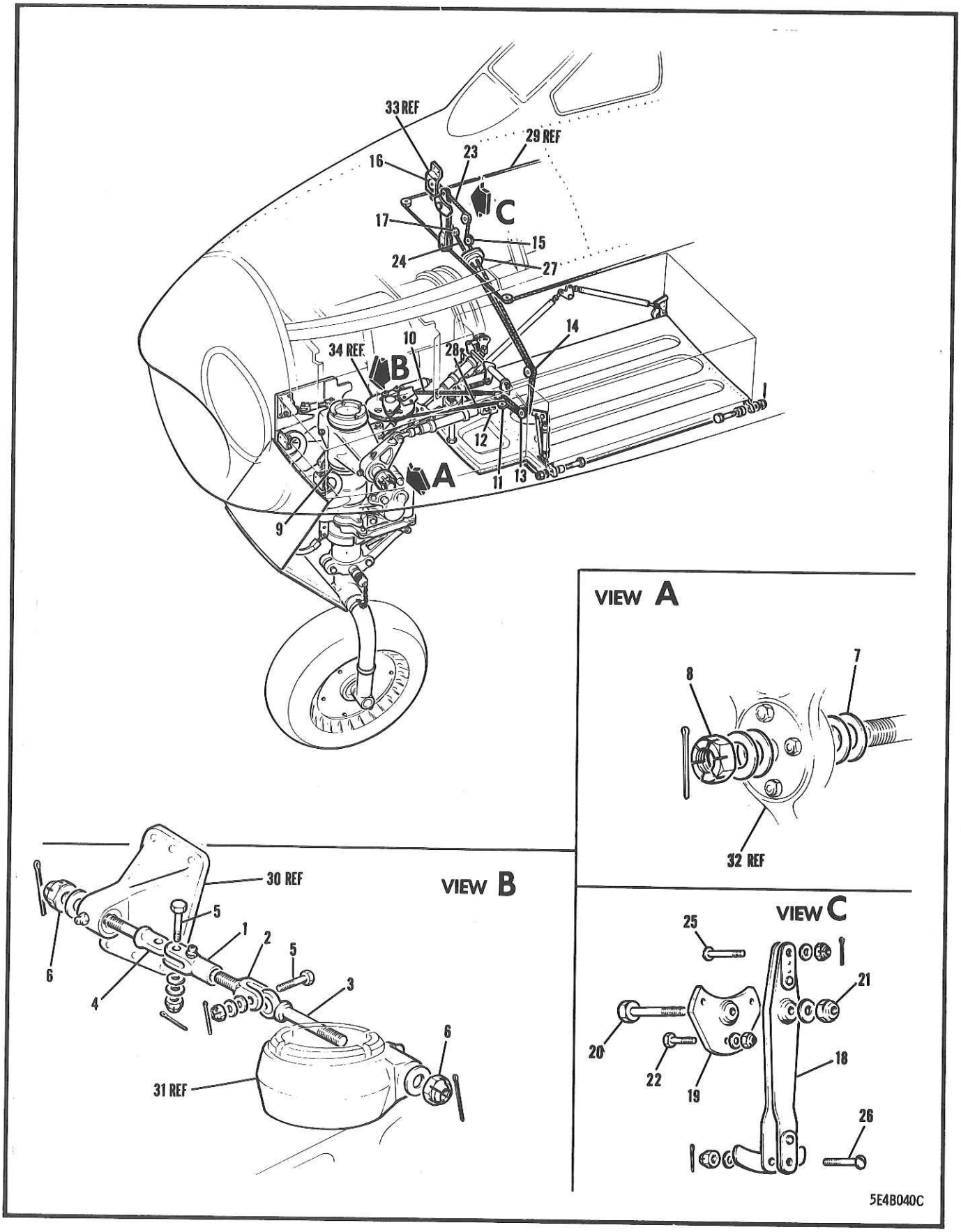

FIGURE 86 NOSE LANDING GEAR STEERING MECHANISM

FIGURE AND INDEX NUMBER	GROUP LANDING GEAR MAJOR ASSEMBLY NOSE LANDING GEAR STEERING MECHANISM PART NUMBER	1234567 NOMENCLATURE	CODE	UNITS PER ASSY
86 -	151-34001-10	GEAR INSTL - NOSE LANDING (SEE FIG. 81)		REF
	140-34181	•ROTATING MECHANISM ASSY - NOSE LANDING GR		1
- 1	140-34184	••LINK ASSY - N/LDG/GR ROTATING MECHANISM FTG LEVER CONN MPI		1
	NAS2-101	•••FITTING -		1
- 2	140-34183	••LINK - N/LDG/GR ROTATING MECHANISM OLEO LEVER CONN MPI		1
- 3	172-34185-7	••LEVER ASSY - NOSE LDG/GR OLEO ROTATING MECHANISM MPI		1
	AT-4	•••NEEDLE-BEARING - AIRCRAFT (TOR)		1
- 4	172-34185-9	••LEVER ASSY - NOSE LDG/GR OLEO ROTATING MECHANISM MPI		1
	AT-4	•••NEEDLE-BEARING - AIRCRAFT (TOR)		1
- 5	AN174-11	••BOLT - (LEVER TO LINK ATTACHING)		2
	AN960-416	••WASHER -		2
	AN960-416L	••WASHER -		2
	AN310-4	••NUT -		2
	AN380-2-2	••COTTER-PIN -		2
	AN960-716	•WASHER -		2
- 6	AN310-7	•NUT - (ROTATING MECH TO FTG & YOKE ATT)		2
	AN380-3-3	•COTTER-PIN -		2
- 7	140-34127-3	•SHIM - NOSE LANDING GEAR TRUNNION PIN		AR
	140-34127-4	•SHIM - NOSE LANDING GEAR TRUNNION PIN		AR
	2W1AL74-44-91	•WASHER - PLAIN (NAA) (PORT SIDE)		AR
	2W1AL74-44-20	•WASHER - PLAIN (NAA) (PORT SIDE)		AR
	2W1AL74-44-093	•WASHER - PLAIN (NAA) (STARBOARD SIDE)		AR
- 8	140-34128	•NUT - NOSE LANDING GEAR TRUNNION PIN		2
	AN380-4-7	•COTTER-PIN -		2
- 9	738-64-6	•CLIP - LINE SUPPORT (ADE)		2
	MS21919WDG6	•CLAMP - AIRCRAFT LOOP TYPE SUP. CUSHIONED OR		1
	AN742D8C	•CLAMP -		
	2C16-5	•CLIP - CONDUIT (NAA)		1
	MS21919WDG6	•CLAMP - AIRCRAFT LOOP TYPE SUP. CUSHIONED OR		1
	AN742D6C	•CLAMP -		
	AN520-10R10	•SCREW -		2
	AN365-1032	•NUT -		2
-10	140-34627	•CABLE ASSY - NOSE LDG/GR STEERING LOWER		1
-11	AN210-2A	•PULLEY -		2
-12	AN3-10A	•BOLT - (PULLEY ATTACHING)		2
	AN960D10	•WASHER -		4
	AN365-1032	•NUT -		2
-13	AN210-2A	•PULLEY -		2
	AN3-11A	•BOLT - (PULLEY ATTACHING)		1
	AN960D10	•WASHER -		1
-14	AN210-2A	•PULLEY -		2
	AN3-10A	•BOLT - (PULLEY ATTACHING)		1
	AN960D10	•WASHER -		1
-15	AN210-2A	•PULLEY -		1
	AN3-7A	•BOLT - (PULLEY ATTACHING)	001-370	1
	AN3-12A	•BOLT - (PULLEY ATTACHING)	371-	1
	4S3-10D7	•SPACER - BOLT (NAA)	001-370	1
	4S3D10-9	•SPACER - BOLT (NAA)	371-	1
	AN960D10	•WASHER -		1
-16	AN210-2A	•PULLEY -		2
	AN3-7A	•BOLT -		2
-17	AN210-1A	•PULLEY -		1
	AN3-6A	•BOLT -		1
	AN960D10	•WASHER -		1

FIGURE AND INDEX NUMBER	GROUP LANDING GEAR MAJOR ASSEMBLY NOSE LANDING GEAR STEERING MECHANISM PART NUMBER	1234567 NOMENCLATURE	CODE	UNITS PER ASSY
86 -	AN365-1032	•NUT -		1
	140-34639	•SUPPORT ASSY - N/LDG/GR STEERING CABLE CAM		1
-18	140-34623-10	••ARM ASSY - N/LDG/GR STEERING CABLE ACTE		1
	AR-5	•••NEEDLE-BEARING - AIRCRAFT (TOR)		1
-19	140-34640	••FITTING ASSY - NOSE LANDING GEAR STEERING CABLE CAM SUPPORT		1
	NAS77-5-28	•••BUSHING -		
-20	AN5-13A	••BOLT - (FITTING TO ARM ATTACHING)		1
	2W1-20-24-64	••WASHER - PLAIN (NAA)		1
-21	AN365-524	••NUT -		1
-22	NAS205-18	•BOLT - (SUPPORT TO PLATE ATTACHING)		1
	AN960C10	•WASHER -		3
	AN365-1032	•NUT -		3
-23	151-34631	•CABLE ASSY - NOSE LANDING GEAR STEERING PORT SIDE (TOTAL LENGTH 73-1/4 IN.)		3 1
-24	151-34632	•CABLE ASSY - NOSE LANDING GEAR STEERING STBD SIDE (TOTAL LENGTH 84-7/8 IN.)		1
-25	AN23-13	•BOLT - (CABLE TO ARM ATTACHING)		1
	AN960C416L	•WASHER -		1
	AN310-3	•NUT -		1
	AN381-2-12	•COTTER-PIN -		1
-26	AN24-17	•BOLT - (PILOT RUDDER CABLE TO ARM ATT)		1
	AN960C10L	•WASHER -		1
	AN310-4	•NUT -		1
	AN381-2-12	•COTTER-PIN -		1
-27	151-34625	•SEAL - NOSE LDG/GR STEER. CABLE PRESS. WEB		1
-28	AN155-16S	•BARREL -		1
-29	151-52427	CABLE ASSY - PILOT RUDDER BALANCE STUD (SEE SECTION 7)		2 REF
-30	152-34186-20	FITTING ASSY - NOSE LANDING GEAR ROTATING MECHANISM ANCHOR (SEE SECTION 3)		REF
-31	9034-74	YOKE - MOUNTING (SEE FIG. 83)		REF
-32	152-34121-7	FITTING ASSY - NOSE LDG GEAR TRUNNION SUP. PORT SIDE (SEE SECTION 3)		REF
-33	151-34605	BRACKET ASSY - NOSE LDG GEAR STEERING CABLE UPPER PORT SIDE (SEE SECTION 3)		REF
-34	151-34680	PULLEY ASSY - N/LDG/GR STEERING OVERLOAD (SEE FIG. 87)		REF
		(CONTINUED SEE FIG. 87)		

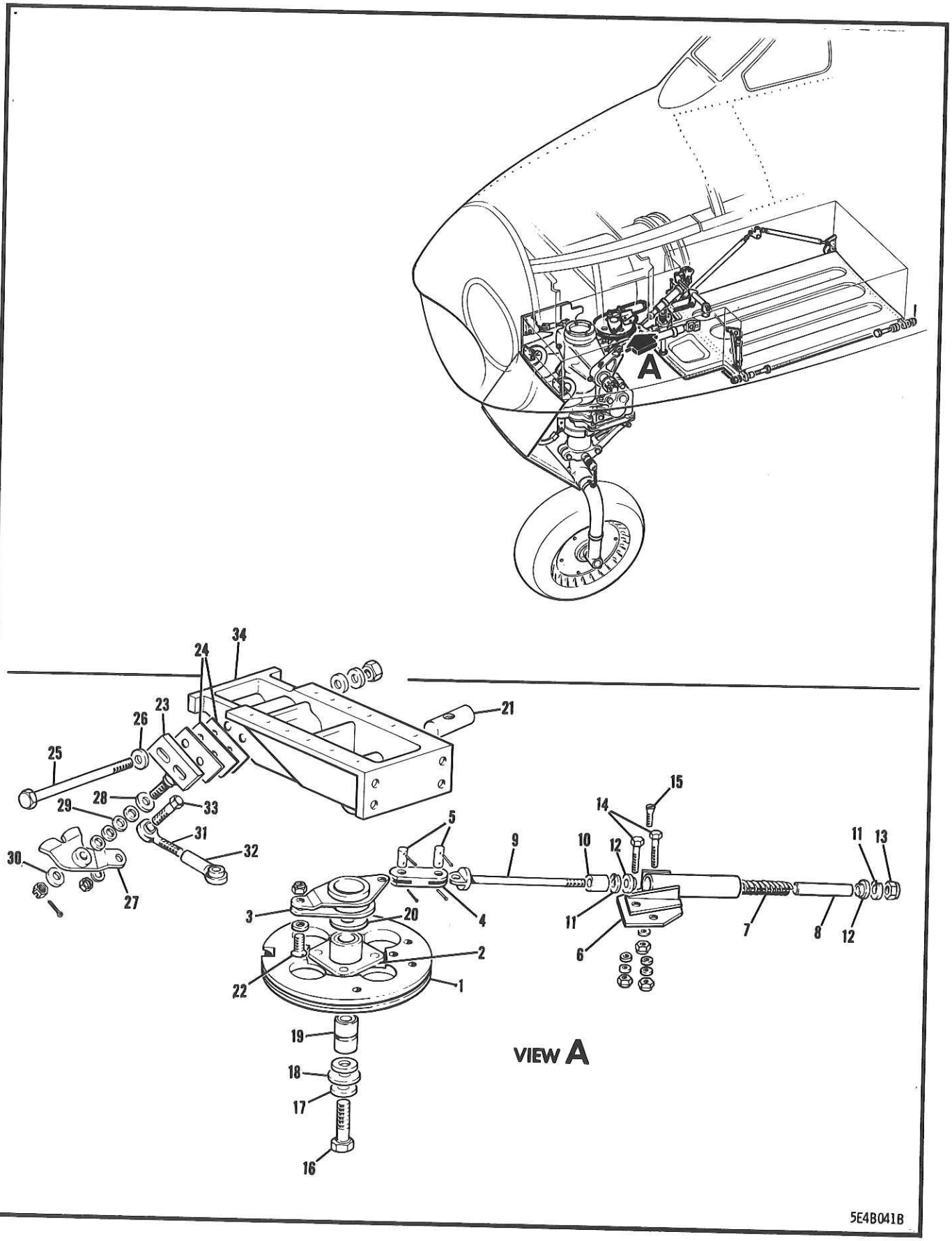

FIGURE 87 NOSE LANDING GEAR STEERING PULLEY

FIGURE AND INDEX NUMBER	GROUP LANDING GEAR MAJOR ASSEMBLY NOSE LANDING GEAR STEERING PULLEY PART NUMBER	1234567 NOMENCLATURE	CODE	UNITS PER ASSY
87 -	151-34001-10	GEAR INSTL - NOSE LANDING (SEE FIG. 81)		REF
	151-34680	.PULLEY ASSY - N/LDG/GR STEERING OVERLOAD		1
- 1	151-34660-5	...PULLEY - NOSE LANDING GEAR STEERING ACTE		1
- 2	151-34687	...BEARING ASSY - NOSE LDG/GR ACTUATING		1
	151-34687-7	....BEARING ASSY - NOSE LANDING GEAR ACTE		1
	151-34687-3	.....PLATE - NOSE LANDING GEAR ACTUATING		1
	151-34687-5	.....TUBE - NOSE LANDING GEAR ACTUATING		1
	4B16CP7-7	....BUSHING - SINTERED OIL IMPG (NAA)		1
- 3	151-34685	..LEVER ASSY - NOSE LANDING GEAR STEERING ACTUATING OVERLOAD	001-719	1
	151-34685-800	..LEVER ASSY - NOSE LANDING GEAR STEERING ACTUATING OVERLOAD	720-	1
	13B-42001	..SPARE PART ASSY FOR 151-34685 & -800		
	13B-42014	...ADAPTER - GREASE FTG NOSE LDG/GR STEER.	720-	1
	MS15001-1	...FITTING - LUBRICATION	720-	1
- 4	151-34684	..LINK - NOSE LANDING GEAR STEER. OVERLOAD		1
- 5	151-34686	..PIN - NOSE LDG/GR STEERING OVERLOAD LINK		2
	AN380-1-1	..COTTER-PIN -		4
	151-34681	..BUNGEE ASSY - N/LDG/GR STEERING OVERLOAD		1
- 6	151-34682	...BRACKET ASSY - NOSE LANDING GEAR BUNGEE		1
- 7	151-34681-3	...SPRING - NOSE LANDING GEAR BUNGEE		1
- 8	4S4D6-76	...SPACER - RIVET (NAA)		1
- 9	AN42-37A	...BOLT - (BUNGEE ROD)		1
-10	4S4-10-8	...SPACER - RIVET (NAA)		1
-11	NAS50-75	...RING -		2
-12	151-34683	...BUSHING - NOSE LANDING GEAR STEERING OVERLOAD BUNGEE		2
-13	AN365-1032	...NUT -		1
-14	AN3-6A	..BOLT - (BUNGEE BRACKET TO PULLEY ATT)		2
-15	AN509-10-13	..SCREW - (BUNGEE BRACKET TO PULLEY ATT)		1
	AN960C10	..WASHER -		5
	AN365-1032	..NUT -		3
-16	AN4-22A	.BOLT - (PULLEY TO BRACKET ATT)		1
-17	AN960-416	.WASHER -		1
-18	2W1AL18-24-64	.WASHER - PLAIN (NAA)	001-404	1
	2W1-16-24-028	.WASHER - PLAIN (NAA)	405-	2
	2W1-28-24-064	.WASHER - PLAIN (NAA)	001-404	1
	2W1-18-24-025	.WASHER - PLAIN (NAA)	405-	AR
	2W1-18-24-031	.WASHER - PLAIN (NAA)	405-	AR
	2W1-28-24-020	.WASHER - PLAIN (NAA)		AR
-19	NAS72-4-005	.BUSHING -		1
-20	2WAL18-24-64	.WASHER - PLAIN (NAA) (BETWEEN PULLEY & BRACKET)	A9	1
	2WAL-18-24-220	.WASHER - PLAIN (NAA) (BETWEEN PULLEY & BRACKET)	D6	1
-21	32-1452-048	.BARREL-NUT - HIGH TENSILE (ESN)		1
-22	AN509-10-12	.SCREW - (END TO LEVER ATT)		1
	AN960-10L	.WASHER -		1
	AN365-1032	.NUT -		1
-23	151-34666	.FITTING - N/LDG/GR STEERING CLUTCH SUPPORT		1
	151-34664	.PLATE - NOSE LDG GEAR STEERING CLUTCH ADJ		1
-24	151-34665	.SHIM - NOSE LDG GEAR STEERING CLUTCH ADJ		AR
-25	AN4-26A	.BOLT - (CLUTCH SUPPORT FTG TO SUPPORT ATT)		2
-26	AN960-416L	.WASHER -		2
	AN960-416	.WASHER -		4
	AN365-428	.NUT -		2
-27	151-34654	.CLUTCH ASSY - NOSE LANDING GEAR STEERING		1
	151-34654-7	..CLUTCH ASSY - NOSE LANDING GEAR STEERING		1
	4B16CP6-14	..BUSHING - SINTERED OIL IMPREGNATED (NAA)		1
-28	2W1-24-20-031	.WASHER - PLAIN (NAA)		1

FIGURE AND INDEX NUMBER	GROUP LANDING GEAR MAJOR ASSEMBLY NOSE LANDING GEAR STEERING PULLEY PART NUMBER	1234567 NOMENCLATURE	CODE	UNITS PER ASSY
87 -29	2W1-24-20-016	•WASHER - PLAIN (NAA) (CLUTCH ADJUSTMENT)		AR
-30	AN960-416	•WASHER - (UNDER-NUT)		1
	AN310-4	•NUT -		1
	AN380-2-2	•COTTER-PIN -		1
-31	151-34668	•ROD ASSY - NOSE LDG/GR STEERING ADJ MPI		1
	LS3	••BEARING - UNIBAL SPHERICAL (HEC)		1
-32	151-34667	•ROD-END ASSY - NOSE LANDING GR STEER• MPI		1
	LS3	••BEARING - UNIBAL SPHERICAL (HEC)		1
-33	AN3-6A	•BOLT - (END TO CLUTCH ATTACHING)		1
	AN960-10	•WASHER -		1
	AN365-1032	•NUT -		1
-34	151-34659	BRACKET - N/LDG/GR STEERING CLUTCH SUPPORT (SEE SECTION 3)		REF
		(CONTINUED SEE FIG• 90)		

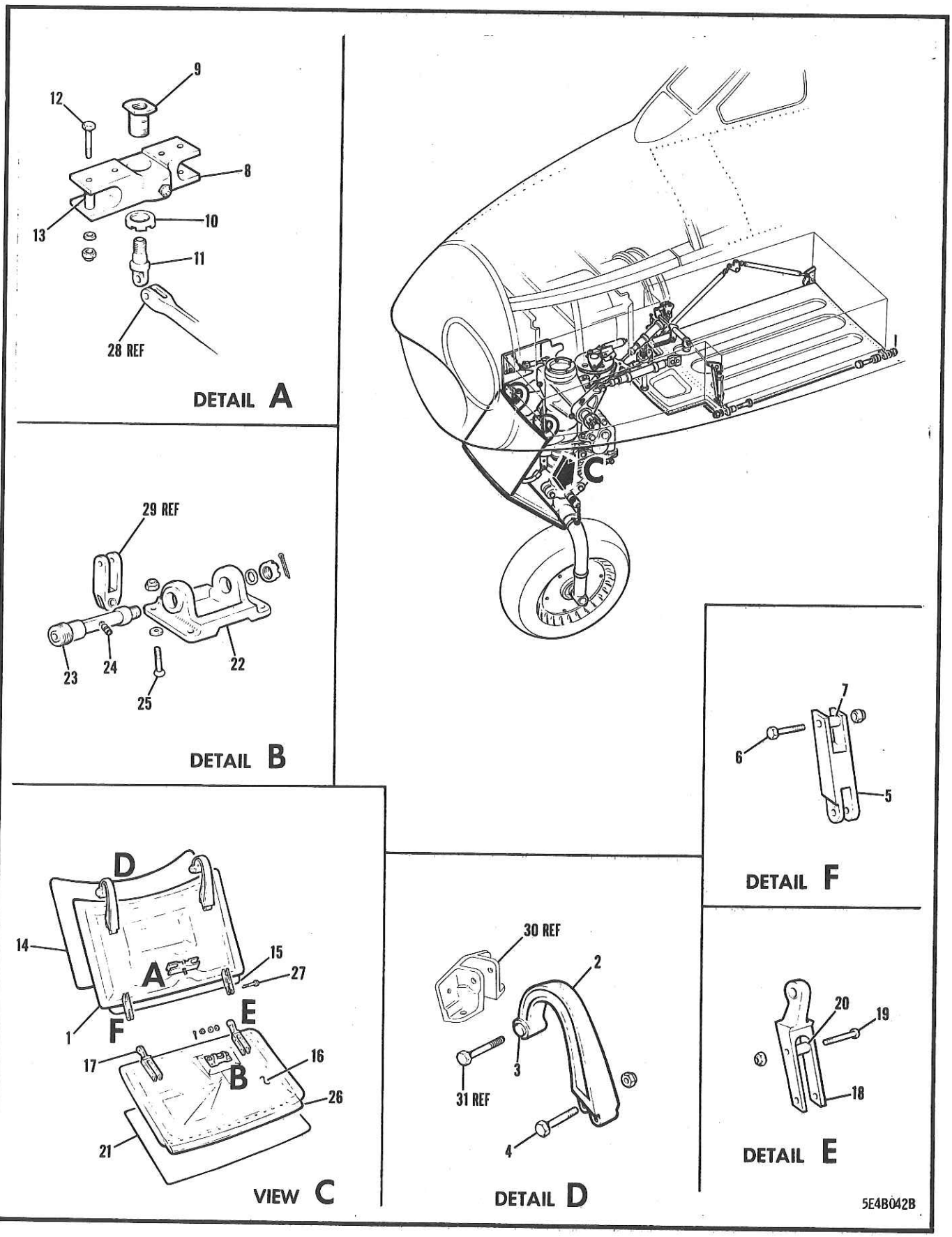

FIGURE 88 NOSE LANDING GEAR STRUT DOOR

FIGURE AND INDEX NUMBER	GROUP LANDING GEAR MAJOR ASSEMBLY NOSE LANDING GEAR STRUT DOOR PART NUMBER	1234567 NOMENCLATURE	CODE	UNITS PER ASSY
88 -	151-34380-10	DOOR ASSY - NOSE GEAR STRUT (SEE FIG. 81)		1
	151-34381	•DOOR ASSY - NOSE GEAR STRUT FORWARD		1
- 1	151-34381-4	••SKIN - NOSE GEAR STRUT FORWARD DOOR INNER		1
- 2	151-34354	••FITTING ASSY - NOSE GEAR STRUT FORWARD DOOR HINGE		2
- 3	4B16CF5-9	•••BEARING - SINTERED OIL IMPREGNATED (NAA)		2
- 4	AN3-10A	••BOLT -		4
	AN365-1032	••NUT -		4
- 5	151-34355	••FITTING - NOSE GEAR STRUT FORWARD DOOR HINGE FOLDING		2
- 6	AN3-10A	••BOLT - MPI		4
- 7	4S4D6-12	••SPACER - RIVET (NAA)		2
	AN365-1032	••NUT -		4
	151-34358	••FITTING ASSY - NOSE GEAR STRUT FORWARD DOOR ACTUATING LINK ATTACHING		1
- 8	151-34359	•••SUPPORT ASSY - NOSE GEAR STRUT FORWARD DOOR ACTE LINK ATT		1
	NAS2-101	••••FITTING -		1
- 9	151-34360	•••BUSHING - NOSE GEAR STRUT FORWARD DOOR ACTUATING LINK ATT		1
-10	151-34362	•••NUT - NOSE GEAR FORWARD DOOR ACTUATING LINK ATTACHING		1
	165-34361	••BOLT ASSY - NOSE GEAR STRUT FORWARD DOOR ACTUATING LINK ATTACHING MPI		1
-11	165-34361-3	•••BOLT - (FORWARD DOOR ACTUATING LINK ATT)		1
	HSB3S	•••BEARING - (HLF) (EYE-BOLT)		1
-12	AN3-14A	••BOLT -		4
-13	4S3D10-22	••SPACER - BOLT (NAA)		2
	AN960A10	••WASHER -		4
	AN365-1032	••NUT -		4
-14	151-34381-3	••SKIN - NOSE GEAR STRUT FORWARD DOOR OUTER		1
-15	151-34381-7	••STRIP - NOSE GEAR STRUT FWD DOOR OUTER		1
	151-34396	•DOOR ASSY - NOSE GEAR STRUT REAR		1
-16	151-34396-4	••SKIN - NOSE GEAR STRUT REAR DOOR INNER		1
-17	151-34397	••HINGE ASSY - NOSE GEAR STRUT REAR DOOR FOLDING		1
-18	151-34367	••HINGE ASSY - NOSE GEAR STRUT REAR DOOR FOLDING		1
	4B16CP3-8	•••BEARING - SINTERED OIL IMPREGNATED (NAA)		1
-19	NAS221-18	••SCREW -		4
-20	4S3-10-12	••SPACER - BOLT (NAA)		4
	AN960-10L	••WASHER -		4
	AN365-1032	••NUT -		4
-21	151-34396-3	••SKIN - NOSE GEAR STRUT REAR DOOR OUTER		1
	151-34370	••FITTING ASSY - NOSE GEAR STRUT REAR DOOR ACTUATING LINK ATT		1
-22	151-34371	•••SUPPORT ASSY - NOSE GEAR STRUT REAR DOOR ACTUATING		1
	4B16CF8-13	••••BEARING - SINTERED OIL IMPG (NAA)		2
	151-34374	•••BOLT ASSY - NOSE GEAR STRUT REAR DOOR ACTUATING MPI		1
-23	151-34374-3	••••BOLT - NOSE GEAR STRUT REAR DOOR ACTUATING MPI		1
	NAS2-201	••••FITTING -		1
-24	151-34375	•••BUSHING - NOSE GEAR STRUT REAR DOOR BOLT		1
	AN960-616L	•••WASHER -		1
	AN960D616	•••WASHER -		1
	2W1-32-24-20	•••WASHER - PLAIN (NAA)		AR
	2W1-32-24-10	•••WASHER - PLAIN (NAA)		AR
	AN320-6	•••NUT -		1

FIGURE AND INDEX NUMBER	GROUP LANDING GEAR MAJOR ASSEMBLY NOSE LANDING GEAR STRUT DOOR PART NUMBER	1234567 NOMENCLATURE	CODE	UNITS PER ASSY
88 -	AN380-3-3	...COTTER-PIN -		1
-25	NAS205-9	..SCREW -		2
	NAS205-8	..SCREW -		2
	A3235-020	..WASHER - FLAT-HEAD SCREW (TIN)		4
	AN365-1032	..NUT - MPI		4
-26	151-34396-7	..STRIP - NOSE GEAR STRUT REAR DOOR		1
	AN3-10	.BOLT -		2
-27	AN960-10	.WASHER -		2
	AN960-10L	.WASHER -		2
	AN310-3	.NUT -		2
	AN380-2-2	.COTTER-PIN -		2
-28	151-34357	LINK ASSY - NOSE GEAR STRUT FWD DOOR ACTE (SEE FIG. 82)		REF
-29	151-34369	LINK ASSY - NOSE GEAR STRUT REAR DOOR ACTE (SEE FIG. 82)		REF
-30	151-34352	SUPPORT - NOSE GEAR STRUT FWD DOOR HINGE LH (SEE SECTION 3)		REF
-31	AN3-13A	BOLT - (DOOR FTG TO SUP. ATT) (SEE FIG. 81)		REF
		-000-		

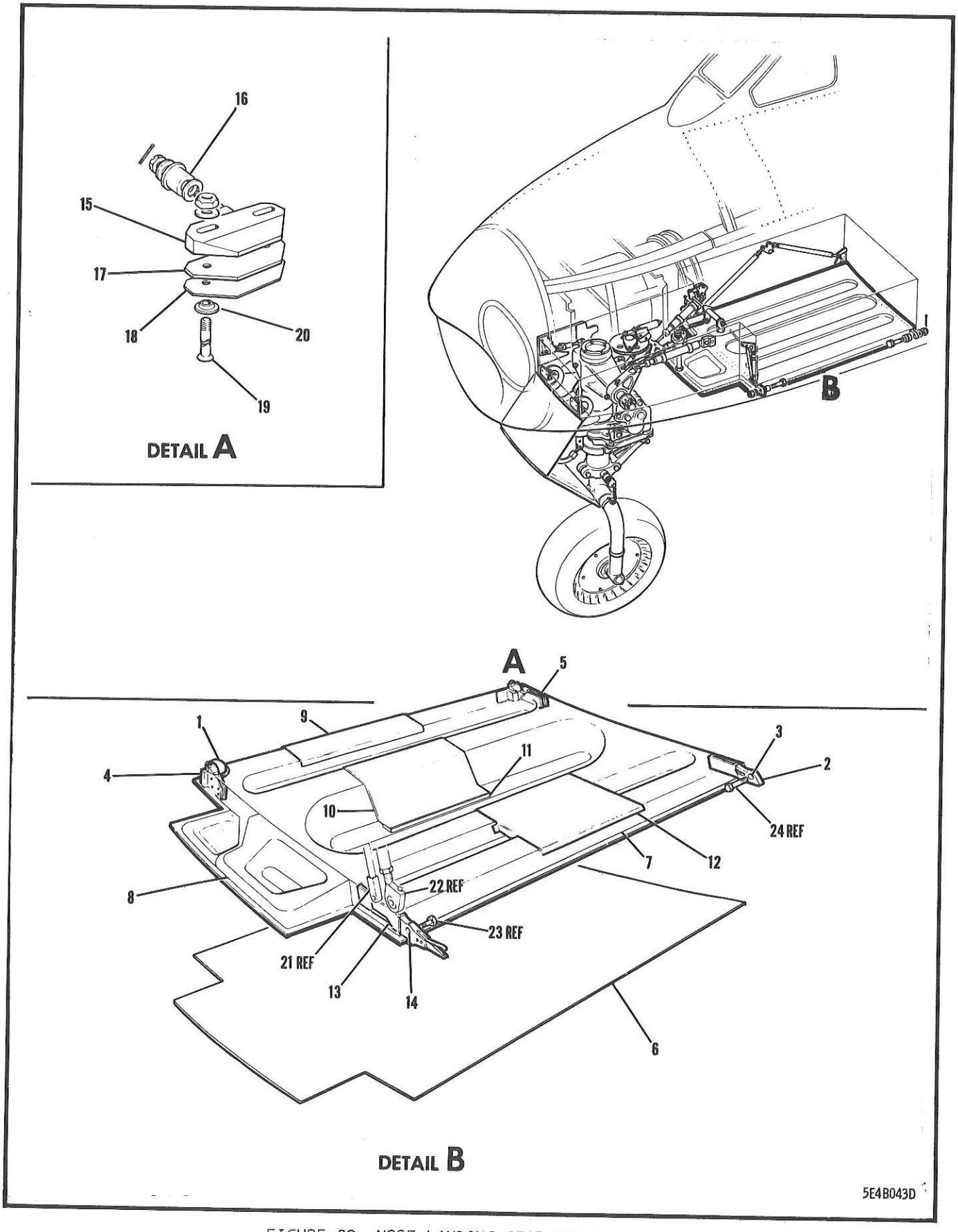

FIGURE 89 NOSE LANDING GEAR WHEEL DOOR

FIGURE AND INDEX NUMBER	GROUP / MAJOR ASSEMBLY / PART NUMBER	LANDING GEAR / NOSE LANDING GEAR WHEEL DOOR / 1234567 NOMENCLATURE	CODE	UNITS PER ASSY
89 -	140-34301	DOOR ASSY - NOSE GR WHEEL (SEE FIG. 81)	001-020	1
	140-34301-850	DOOR ASSY - NOSE GEAR WHEEL	021-201	1
	140-34301-860	DOOR ASSY - NOSE GEAR WHEEL	202-	1
	140-34301-33	.DOOR ASSY - NOSE GEAR WHEEL		1
- 1	140-34301-15	..CAP - NOSE GEAR WHEEL DOOR		1
	140-34301-22	..DOOR ASSY - NOSE GEAR WHEEL		1
	140-34301-11	...DOOR ASSY - NOSE GEAR WHEEL		1
- 2	140-34303	....HINGE ASSY - NOSE GEAR WHEEL DOOR REAR	001-201	1
	140-34303-800	....HINGE ASSY - NOSE GEAR WHEEL DOOR REAR	202-	1
- 3	4B16CF7-13	.....BEARING - SINTERED OIL IMPG (NAA)	001-201	2
	4B16RP7-24	.....BEARING - SINTERED OIL IMPG (NAA)	202-	1
- 4	140-34304	....BLOCK - NOSE GEAR WHEEL DOOR LOCK BACK-UP FORWARD		1
- 5	140-34305	....BLOCK - NOSE GEAR WHEEL DOOR LOCK BACK-UP REAR		1
	AN960-416	....WASHER -		AR
- 6	140-34301-3	...SKIN - NOSE GEAR WHEEL DOOR OUTER		1
- 7	140-34301-4	...SKIN - NOSE GEAR WHEEL DOOR INNER REAR		1
- 8	140-34301-5	...SKIN - NOSE GEAR WHEEL DOOR INNER FWD		1
- 9	140-34301-23	...STRIP - NOSE GEAR WHEEL DOOR RUBBING		1
-10	140-34301-14	...STRIP - NOSE GEAR WHEEL DOOR RUBBING		1
-11	140-34301-16	...STRIP - NOSE GEAR WHEEL DOOR PACKING		1
-12	140-34301-12	...STRIP - NOSE GEAR WHEEL DOOR RUBBING		1
	140-34301-950	...SHIM - NOSE GEAR WHEEL DOOR PACKING		1
-13	140-34302-13	.HINGE ASSY - NOSE GEAR WHEEL DOOR FORWARD	001-010	1
	140-34302-11	.HINGE ASSY - NOSE GEAR WHEEL DOOR FORWARD	011-	1
	140-34302-5	..HINGE ASSY - NOSE GEAR WHEEL DOOR FORWARD		1
-14	4B16CF7-13	..BEARING - SINTERED OIL IMPREGNATED (NAA)		2
	140-34306	.LOCK ASSY - NOSE GEAR WHEEL DOOR		2
-15	140-34309	..FITTING - NOSE GEAR WHEEL DOOR LOCK MPI		1
-16	140-34307	..ROLLER ASSY - N/GR WHEEL DOOR LOCK MPI		1
	B-66	...NEEDLE-BEARING - DRAWN CUP (TOR)		2
	2W1-24-24-50	..WASHER - PLAIN (NAA)		1
	2W1-16-24-63	..WASHER - PLAIN (NAA)		1
	AN320-4	..NUT -		1
	AN380-2-2	..COTTER-PIN -		1
-17	140-34310	.LOCK-PLATE - NOSE GEAR WHEEL DOOR		2
-18	140-34311	.SHIM - NOSE GEAR WHEEL DOOR LOCK		AR
-19	NAS206-46	.SCREW - MPI (FORWARD LOCK)		2
	NAS206-45	.SCREW - MPI (REAR LOCK)		2
-20	A3475-020	.WASHER - FLAT-HEAD SCREW (TIN)		4
	AN365-428	.NUT -		4
-21	151-58645-3	CYLINDER ASSY - NOSE GEAR FAIRING DOOR OPR (SEE SECTION 11)		REF
-22	151-34549-5	ROD-END - NOSE GEAR DOOR LOCK SAF LINK (SEE FIG. 90)		REF
-23	AN4H16	BOLT - (FWD HINGE ATTACHING) (SEE FIG. 81)		REF
-24	AN4-16A	BOLT - (REAR HINGE ATTACHING) (SEE FIG. 81)		REF

-000-

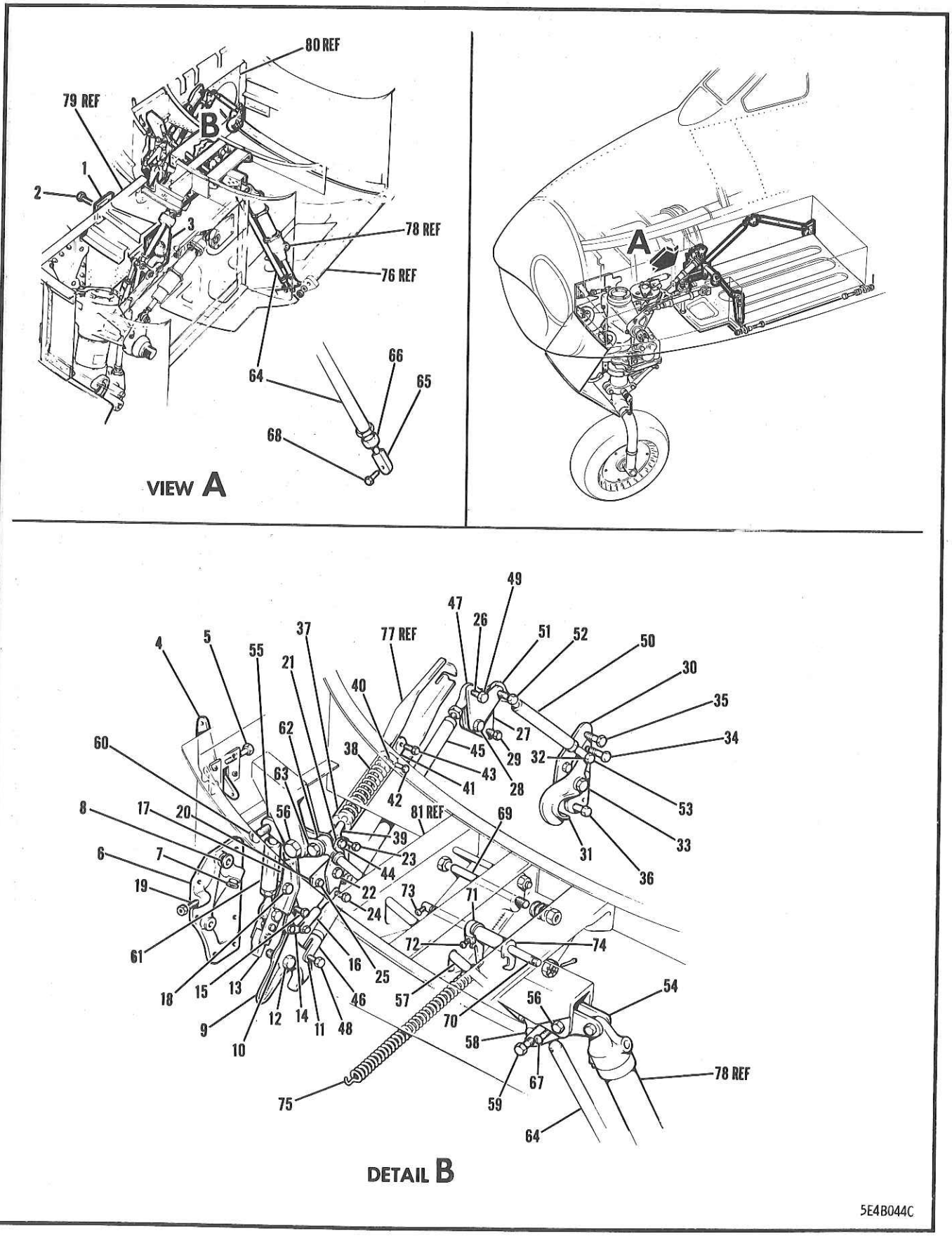

FIGURE 90 NOSE LANDING GEAR & DOOR UPLATCH

FIGURE AND INDEX NUMBER	GROUP LANDING GEAR MAJOR ASSEMBLY NOSE LANDING GEAR & DOOR UPLATCH PART NUMBER	1234567 NOMENCLATURE	CODE	UNITS PER ASSY
90 -	151-31731-806	FUSELAGE ASSY - NOSE SECTION STA 0 TO 126 (SEE SECTION 3)		REF
- 1	152-31121-3	•FITTING - NOSE GEAR DRAG STRUT SUPPORT (STARBOARD SIDE)		1
- 2	AN5-6A	•BOLT - (FITTING TO ANGLE ATTACHING)		2
	AN365-524	•NUT -		2
- 3	152-34161	•FITTING ASSY - N/LDG/GR DRAG BRACE FUS ATT (STARBOARD SIDE)		1
	152-34161-3	••FITTING - N/LDG/GR DRAG BRACE FUS ATT		1
	NAS75-9-016	••BUSHING -		1
	AN7-15A	•BOLT - (FITTING ATTACHING)		2
	AN7-14A	•BOLT - (FITTING ATTACHING) (AS PER EO 05-5E-6A/139)		2
	AN960-716	•WASHER -		2
	151-31731-821	•NUT ASSY - FUSELAGE NOSE SECTION (AS PER EO 05-5E-6A/139)		2
	151-31731-823	••ROD - FUSELAGE NOSE SECTION		1
	151-31731-825	••NUT - FUSELAGE NOSE SECTION (MAKE FROM 12B-070)		2
	AN6-11A	•BOLT - (FITTING ATTACHING)		1
	AN6-12A	•BOLT - (FITTING ATTACHING)		1
	AN960-616	•WASHER -		3
	52-1571B-064	•STOP-NUT - (ESN) (AS PER EO 05-5E-6A/139)		2
- 4	151-33626	•ARM ASSY - LDG/GR EMY REL NOSE WHEEL DOOR LOCK ACTUATING		1
	NAS76A6-011	••BUSHING -		1
	NAS72-3-006	•BUSHING -		1
- 5	AN3-7A	•BOLT -		1
	AN960-10	•WASHER -		2
	AN365-1032	•NUT -		1
	140-34532	•TOGGLE ASSY - NOSE WHEEL DOOR		1
- 6	140-34540	••FITTING ASSY - NOSE WHEEL DOOR TOG. SUP.		1
- 7	140-34539	•••BUSHING - NOSE WHEEL DOOR LOCK TOG. STOP		2
- 8	4B20S6-24	•••BUSHING - FLANGED PRESS-FIT (NAA)		1
	4B20S6-20	•••BUSHING - FLANGED PRESS-FIT (NAA)		1
- 9	140-34533	••LATCH ASSY - NOSE WHEEL DOOR FORWARD		1
	140-34533-5	•••LATCH ASSY - NOSE WHEEL DOOR FORWARD MPI		1
-10	4B16RP4-13	•••BEARING - SINTERED OIL IMPREGNATED (NAA)		1
-11	4B16CP4-9	•••BEARING - SINTERED OIL IMPREGNATED (NAA)		1
	AT-6	•••NEEDLE-BEARING - AIRCRAFT (TOR)		1
-12	AN6-17	••BOLT -	001-100	1
	AN6-21A	••BOLT -	101-	1
	2W1-24-36-64	••WASHER - PLAIN (NAA)		1
	AN960-616	••WASHER -		1
	AN960-616	••WASHER -	101-	1
	AN320-6	••NUT -	001-100	1
	AN365-624	••NUT -	101-	1
	AN380-3-4	••COTTER-PIN -	001-100	1
-13	140-34535	••BELL-CRANK ASSY - NOSE WHEEL DOOR TOGGLE OPERATING MPI		1
	140-34535-5	•••BELL-CRANK ASSY - NOSE WHEEL DOOR TOGGLE OPERATING		1
	140-33653	•••GUIDE - LDG/GR EMY REL WHEEL DOOR LINK		1
	6NCC1312YP	•••NEEDLE-BEARING - AIRCRAFT (TOR)		1
-14	140-34534	••LINK ASSY - NOSE WHEEL DOOR LOCK TOGGLE		1
	140-34534-6	•••LINK ASSY - NOSE WHEEL DOOR LOCK TOGGLE		1

(CONTINUED)

FIGURE AND INDEX NUMBER	GROUP LANDING GEAR MAJOR ASSEMBLY NOSE LANDING GEAR & DOOR UPLATCH PART NUMBER	1234567 NOMENCLATURE	CODE	UNITS PER ASSY
90 -	4B16RP4-14	•••BEARING - SINTERED OIL IMPREGNATED (NAA)		2
-15	140-34538	••PIN - NOSE WHEEL DOOR LOCK TOG. OPERATING		2
	AN960-416	••WASHER -		2
	AN380-2-2	••COTTER-PIN -		2
-16	140-34571	••LINK ASSY - N/LDG/GR WHEEL LOCK TOG. ACTE		1
	140-34572	•••ROD - N/LDG/GR WHEEL DOOR LOCK TOGGLE ACTUATING LINK		1
	140-34573	•••END - N/LDG/GR WHEEL DOOR LOCK TOGGLE ACTUATING LINK		1
	AN316-4R	•••NUT -		1
	AN393-15	••PIN -		1
	AN960-10	••WASHER -		1
	AN380-2-2	••COTTER-PIN -		1
-17	151-54371-10	••ACTUATOR ASSY - ELECTRICAL N/LDG/GR DOOR UPLOCK INDICATING		1
	151-54261-7	•••STOP - MAIN LDG/GR UPLOCK SEQ SW ELEC		1
	AN345-10	•••NUT -		1
	AN520-10R8	••SCREW -		1
	4S3-10-14	••SPACER - BOLT (NAA)		1
	AN960-10	••WASHER -		2
	AN365-1032	••NUT -		1
-18	AN6-21	••BOLT -		1
	AN960-616	••WASHER -		2
	AN320-6	••NUT -		2
	AN380-3-4	••COTTER-PIN -		1
-19	5B1-12	••BOLT -		2
	AN960-10L	••WASHER -		2
	AN315-3	••NUT -		2
	AN3-6A	•BOLT -		5
	AN3-7A	•BOLT -		1
	AN960-10	•WASHER -		3
	AN960-10L	•WASHER -		2
	AN365-1032	•NUT -		2
	140-34570	•BELL-CRANK ASSY - N/LDG/GR WHEEL DOOR LOCK TOGGLE ACTUATING		1
-20	140-34569	••FITTING ASSY - N/LDG/GR WHEEL DOOR LOCK TOGGLE BELCRK SUP.		1
	4B20S4-008	•••BUSHING - FLANGED PRESS-FIT (NAA)		2
-21	140-34568	••BELL-CRANK ASSY - N/LDG/GR WHEEL DOOR LOCK TOGGLE ACTE		1
	140-34568-7	•••BELL-CRANK ASSY - N/LDG/GR WHEEL DOOR LOCK TOGGLE ACTE		1
	AR-6	•••NEEDLE-BEARING - AIRCRAFT (TOR)		1
-22	AN4-16A	••BOLT - (BELL-CRANK TO FITTING ATTACHING)		1
	2W1AL16-24-32	••WASHER - PLAIN (NAA)		1
	AN960D416	••WASHER -		1
	AN365-428	••NUT -		1
-23	AN3-5A	•BOLT - (BELL-CRANK FITTING ATTACHING)		2
	AN960-10	•WASHER -		2
	AN365-1032	•NUT -		2
-24	AN23-10	•BOLT - (LINK TO BELL-CRANK ATTACHING)		1
	AN960-10	•WASHER -		1
	AN320-3	•NUT -		1
	AN380-2-2	•COTTER-PIN -		1
-25	AN3-11A	•BOLT -		1
	140-34558	•BELL-CRANK ASSY - NOSE WHEEL DOOR REAR LATCH (COMPLETE)		1
-26	140-34552	••BELL-CRANK ASSY - NOSE WHEEL DOOR REAR LATCH OPR MPI		1
	140-34552-6	•••BELL-CRANK ASSY - NOSE WHEEL DOOR REAR LATCH OPERATING		1

FIGURE AND INDEX NUMBER	GROUP LANDING GEAR MAJOR ASSEMBLY NOSE LANDING GEAR & DOOR UPLATCH PART NUMBER	1234567 NOMENCLATURE	CODE	UNITS PER ASSY
90 -	AR-4	•••NEEDLE-BEARING - AIRCRAFT (TOR)		1
-27	140-34553	••SUPPORT ASSY - NOSE WHEEL DOOR REAR LATCH		1
	NAS77-4-68	•••BUSHING -		1
-28	AN4-17	••BOLT - (BELL-CRANK TO SUPPORT ATTACHING)		1
	2W1AL16-26-32	••WASHER - PLAIN (NAA)		1
	AN960-416L	••WASHER -		1
	AN310-4	••NUT -		1
	AN380-2-3	••COTTER-PIN -		1
-29	AN3-7A	•BOLT - (BELL-CRANK SUPPORT ATTACHING)		2
	AN960-10	•WASHER -		4
	AN365-1032	•NUT -		2
	140-34557	•LATCH ASSY - NOSE WHEEL DOOR REAR (COMPL)		1
-30	140-34556-11	••SUPPORT ASSY - NOSE WHEEL DOOR REAR LATCH		1
	4B20S6-25	•••BUSHING - FLANGED PRESS-FIT (NAA)		1
-31	140-34555	••LATCH ASSY - NOSE WHEEL DOOR REAR MPI		1
	140-34555-5	•••LATCH ASSY - NOSE WHEEL DOOR REAR		1
-32	4B16CP4-9	•••BEARING - SINTERED OIL IMPREGNATED (NAA)		1
	AT-6	•••NEEDLE-BEARING - AIRCRAFT (TOR)		1
-33	AN6-20	••BOLT - (LATCH TO SUPPORT ATTACHING)		1
	2W1-24-36-35	••WASHER - PLAIN (NAA)		2
	AN960D616	••WASHER -		1
	AN310-6	••NUT -		1
	AN380-3-3	••COTTER-PIN -		1
-34	AN3-6A	•BOLT -		3
-35	AN3-7A	•BOLT -		1
-36	AN3-10A	•BOLT -		3
	AN960-10	•WASHER -		10
	AN365-1032	•NUT -		7
	151-34001-10	GEAR INSTL - NOSE LANDING (SEE FIG. 81)		REF
	140-34562	•BUNGEE ASSY - NOSE LDG/GR WHEEL DOOR LOCK TOGGLE ACTUATING (STARBOARD SIDE)		1
-37	140-34563	••TUBE - NOSE LDG/GR WHEEL DOOR LOCK BUNGEE		1
	140-34566	••WASHER - N/LDG/GR WHEEL DOOR LOCK BUNGEE		1
-38	140-34574	••SPRING - N/LDG/GR DOOR LOCK TOG. BUNGEE		1
-39	140-34564	••ROD - NOSE LDG/GR WHEEL DOOR LOCK BUNGEE		1
-40	2W1-12-24-95	••WASHER - PLAIN (NAA)		1
	AN364-1032	••NUT -		1
-41	140-34565	••END - NOSE LDG/GR WHEEL DOOR LOCK BUNGEE		1
-42	AN392-29	••PIN -		2
	AN380-2-1	••COTTER-PIN -		2
-43	AN23-15	•BOLT - (BUNGEE TO FITTING ATT)		1
-44	AN23-10	•BOLT - (BUNGEE TO BELL-CRANK ATT)		1
	AN960-10	•WASHER -		3
	AN320-3	•NUT -		3
	AN380-2-2	•COTTER-PIN -		3
	140-34551	•ROD ASSY - NOSE WHEEL DOOR FRONT TO REAR LATCH (STARBOARD SIDE)		1
-45	140-34551-3	••ROD - NOSE WHEEL DOOR FRONT TO REAR LATCH		1
-46	140-34551-7	••ROD-END - NOSE WHEEL DOOR FRONT TO REAR LATCH (MAKE FROM AN481-9P)		1
	140-34551-5	••ROD-END - NOSE WHEEL DOOR FRONT TO REAR LATCH (MAKE FROM 1R4-8)		1
-47	REB3N	••ROD-END - DOUBLE-ROW SELF-ALIGNING BEARING (FBC)		1
	AN316-4R	••CHECK-NUT -		1
-48	AN3-7A	•BOLT - MPI (ROD TO LATCH ATT)		1
	AN960D10	•WASHER -		1
	AN365-1032	•NUT -		1
-49	AN4-10	•BOLT - MPI (ROD TO BELL-CRANK ATT)		1
	AN960-416	•WASHER -		2

FIGURE AND INDEX NUMBER	GROUP LANDING GEAR MAJOR ASSEMBLY NOSE LANDING GEAR & DOOR UPLATCH PART NUMBER	1234567 NOMENCLATURE	CODE	UNITS PER ASSY
90 -	AN310-4	•NUT -		1
	AN380-2-2	•COTTER-PIN -		1
	140-34554	•ROD ASSY - NOSE WHEEL DOOR REAR LATCH OPR		1
-50	140-34554-3	••ROD - NOSE WHEEL DOOR REAR LATCH OPR		1
	140-34554-5	••ROD-END - NOSE WHEEL DOOR REAR LATCH (MAKE FROM 1R4-8)		1
-51	REB3N	••ROD-END - DOUBLE-ROW SELF-ALIGNING BEARING (FBC)		1
	AN316-4R	••CHECK-NUT -		1
	140-34554-7	••ROD-END - NOSE WHEEL DOOR REAR LATCH (MAKE FROM AN481-9P)		1
-52	AN4-10	•BOLT - MPI (ROD TO BELL-CRANK ATT)		1
	AN960-416	•WASHER -		2
	AN310-4	•NUT -		1
	AN380-2-2	•COTTER-PIN -		1
-53	AN3-7A	•BOLT - MPI (ROD TO LATCH ATTACHING)		1
	AN960-10L	•WASHER -		1
	AN365-1032	•NUT -		1
-54	140-34545	•BELL-CRANK ASSY - NOSE WHEEL DOOR HYD CYL ATTACHING MPI (PORT SIDE)		1
	140-34545-6	••BELL-CRANK ASSY - NOSE WHEEL DOOR HYD CYL ATTACHING		1
	6NCC1312YP	••NEEDLE-BEARING - AIRCRAFT (TOR)		1
-55	140-34542	•BELL-CRANK ASSY - NOSE WHEEL DOOR FORWARD LOCK OPERATING (STARBOARD SIDE)		1
	140-34542-6	••BELL-CRANK ASSY - NOSE WHEEL DOOR FORWARD LOCK OPERATING		1
	6NCC1312YP	••NEEDLE-BEARING - AIRCRAFT (TOR)		1
-56	AN6-17A	•BOLT - MPI (BELL-CRANK TO SUPPORT)		2
	AN960-616L	•WASHER -		2
	AN365-624	•NUT -		2
-57	165-34320-10	•ROD ASSY - NOSE GEAR WHEEL DOOR FWD LOCK OPERATING MPI		1
	165-34320-7	••ROD ASSY - NOSE GEAR WHEEL DOOR FORWARD LOCK OPERATING		1
-58	HRBM4E	••ROD-END - (HLF)		2
	AN316-5R	••CHECK-NUT -		2
-59	AN4-11A	•BOLT - MPI (BELL-CRANK TO ROD ATTACHING PORT SIDE)		1
	AN960-416L	•WASHER -		1
	AN365-428	•NUT -		1
-60	AN24-15	•BOLT - MPI (BELL-CRANK TO ROD ATTACHING STARBOARD SIDE)		1
	AN310-4	•NUT -		1
	AN380-2-2	•COTTER-PIN -		1
-61	140-34541-7	•ROD ASSY - NOSE WHEEL DOOR TOGGLE ATT MPI		1
	140-34541-3	••ROD - NOSE WHEEL DOOR TOGGLE ATT MPI		1
-62	HRBM3E	••ROD-END - (HLF)		2
	AN316-5R	••CHECK-NUT -		2
-63	AN3-10A	•BOLT - MPI (ROD TO BELL-CRANK ATTACHING STARBOARD SIDE)		2
	AN960-10	•WASHER -		2
	AN365-1032	•NUT -		2
	140-34547	•LINK ASSY - NOSE WHEEL DOOR LOCK SAFETY (PORT SIDE)		1
-64	140-34548	••TUBE - NOSE WHEEL DOOR LOCK SAFETY LINK		1
	151-34549	••ROD ASSY - NOSE WHEEL DOOR LOCK SAFETY LINK MPI		1
	151-34549-9	•••ROD - NOSE WHEEL DOOR LOCK SAFETY LINK		1
-65	151-34549-5	•••END - NOSE WHEEL DOOR LOCK SAF LINK MPI		1

FIGURE AND INDEX NUMBER	GROUP LANDING GEAR MAJOR ASSEMBLY NOSE LANDING GEAR & DOOR UPLATCH PART NUMBER	1234567 NOMENCLATURE	CODE	UNITS PER ASSY
90 -66	151-34550	••NUT - NOSE WHEEL DOOR LOCK SAFETY LINK		1
	AN316-8R	••CHECK-NUT -		1
	AN380-2-2	••COTTER-PIN -		1
-67	AN23-15	•BOLT - (BELL-CRANK TO LINK ATT STBD SIDE)		1
	AN960-10L	•WASHER -		1
	AN320-3	•NUT -		1
	AN380-2-2	•COTTER-PIN -		1
-68	AN3-14A	•BOLT - (LINK TO DOOR HINGE ATTACHING)		1
	AN960-10	•WASHER -		2
	AN960-10L	•WASHER -		2
-69	151-34508	•BOLT - N/LDG/GR RETR CYL BELCRK PIVOT MPI		1
	AN960D1016	•WASHER -		3
	AN320-10	•NUT -		1
	AN380-4-5	•COTTER-PIN -		1
-70	151-34514	•TORQUE SHAFT - NOSE LDG GEAR UPLOCK MPI		1
	4S3D716-11	•SPACER - SCREW & BOLT (NAA)		1
	2W1AL28-26-64	•WASHER - PLAIN (NAA)		AR
	140-34510-1	•ACTUATOR ASSY - NOSE GEAR UPLOCK LATCH PORT SIDE MPI		1
-71	140-34510-3	••ACTUATOR - (UPLOCK LATCH PORT SIDE MPI) (MAKE FROM S-4975 (CAN))		1
-72	5B1-6	••BOLT - ADJUSTMENT (NAA)		1
	AN315-3R	••NUT -		1
-73	AN3-10	•BOLT -		1
	AN960D10	•WASHER -		1
	AN365-1032	•NUT -		1
-74	151-34513	•LATCH ASSY - NOSE LANDING GEAR UPLOCK MPI		1
	4B16CF7-16	••BEARING - SINTERED OIL IMPREGNATED (NAA)		2
	AN320-7	•NUT -		1
	AN380-3-3	•COTTER-PIN -		1
-75	151-34515	•SPRING - NOSE LDG GEAR UPLOCK LATCH OPR		1
-76	140-34301	DOOR ASSY - N/LDG/GR WHEEL (SEE FIG. 89)		REF
-77	140-34567	FITTING - N/LDG/GR WHEEL DOOR LOCK BUNGEE SUP. (SEE SECTION 3)		REF
-78	151-58645-3	CYLINDER ASSY - HYD NOSE WHEEL FAIR. DOOR OPERATING COMPLETE (SEE SECTION 11)		REF
-79	151-31142	BEAM ASSY - FUSELAGE STA 27-63 TRUNNION RH (SEE SECTION 3)		REF
-80	151-31144-33	BEAM ASSY - FUS STA 54 TO 85 RH NOSE WHEEL (SEE SECTION 3)		REF
-81	151-34502	FITTING ASSY - N/LDG/GR RETR CYLINDER SUP. (SEE FIG. 91)		REF
		(CONTINUED SEE FIG. 91)		

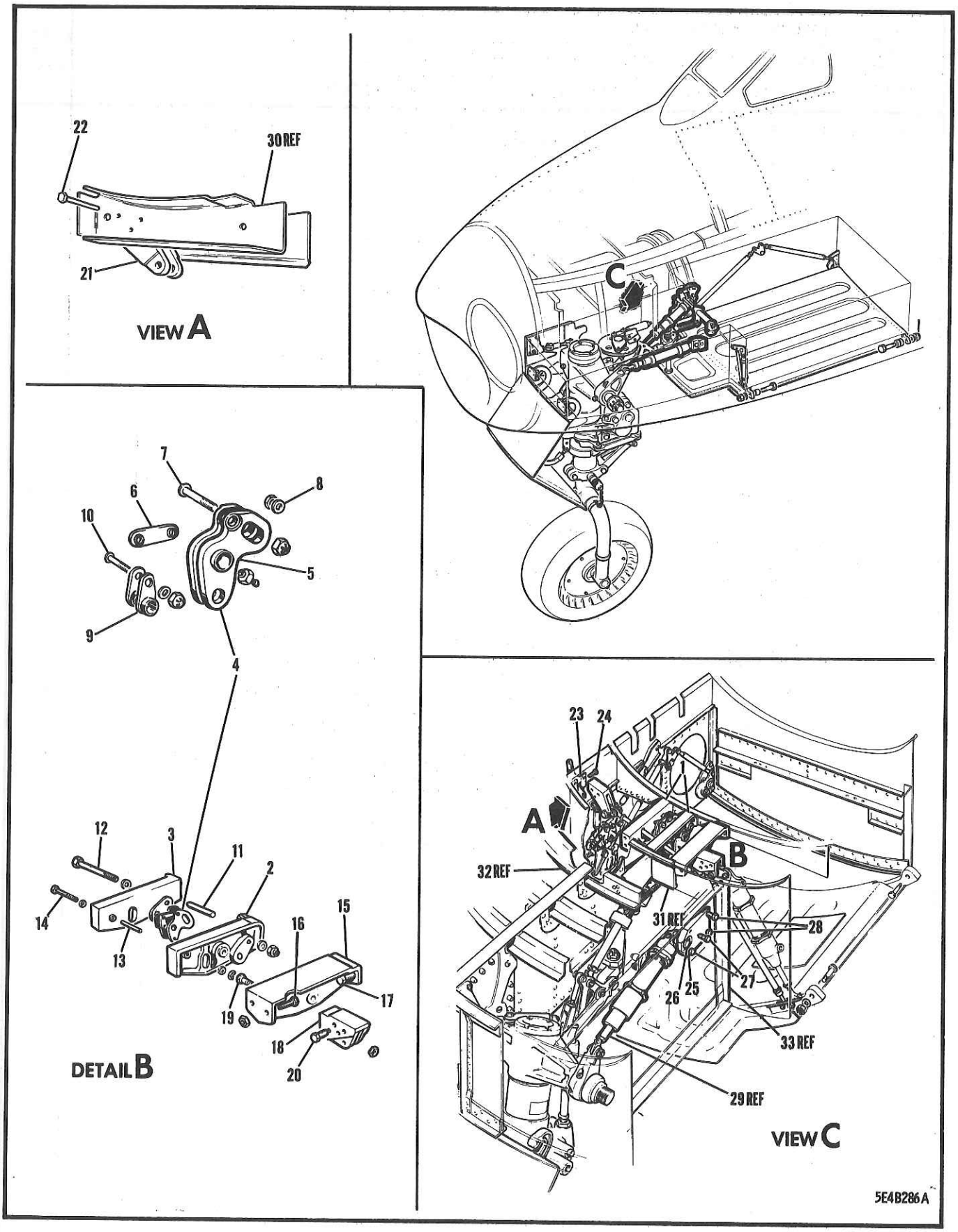

FIGURE 91 NOSE LANDING GEAR & DOOR UPLATCH

FIGURE AND INDEX NUMBER	GROUP / MAJOR ASSEMBLY / PART NUMBER	LANDING GEAR / NOSE LANDING GEAR & DOOR UPLATCH / 1234567 NOMENCLATURE	CODE	UNITS PER ASSY
91 -	151-31106-81	DUCT ASSY - FUSELAGE STA 15-78 LOWER (SEE SECTION 3)		REF
- 1	151-34502	•FITTING ASSY - NOSE LDG/GR RETR CYL SUP•		1
- 2	151-34503	••FITTING ASSY - NOSE LANDING GEAR RETR CYLINDER SUPPORT (PORT SIDE)		1
	4SB7C	•••BEARING - (HLF) (SELF-ALIGNING)		1
- 3	151-34504	••FITTING - NOSE LANDING GEAR RETRACTING CYLINDER SUPPORT (STARBOARD SIDE)		1
- 4	151-34505	••BELL-CRANK ASSY - NOSE LDG/GR RETRACTING CYLINDER & UPLOCK ACTUATING		1
- 5	151-34506	•••BELL-CRANK ASSY - NOSE LANDING GEAR RETRACTING CYLINDER ACTUATING MPI		1
	151-34506-7	••••BELL-CRANK ASSY - NOSE LANDING GEAR RETRACTING CYLINDER ACTUATING MPI		1
	NAS2-101	••••FITTING -		1
- 6	140-34506	•••LINK ASSY - NOSE LDG/GR UPLOCK OPERATING		1
	4B16CP4-7	••••BEARING - SINTERED OIL IMPG (NAA)		1
	4B16CP4-12	••••BEARING - SINTERED OIL IMPG (NAA)		1
- 7	AN24-17	•••BOLT - (LINK TO BELL-CRANK ATTACHING)		1
	AN960C416	•••WASHER -		1
- 8	2W1-16-12-025	•••WASHER - PLAIN (NAA)		2
	AN320-4	•••NUT -		1
	AN380-2-2	•••COTTER-PIN -		1
- 9	140-34507	•••BELL-CRANK ASSY - NOSE LANDING GEAR UPLOCK OPERATING MPI		1
-10	AN24-14	•••BOLT - (BELL-CRANK TO LINK ATTACHING)		1
	AN960C416	•••WASHER -		1
	AN320-4	•••NUT -		1
	AN380-2-2	•••COTTER-PIN -		1
-11	NAS75-8-119	••BUSHING -		1
-12	151-34509	••BOLT - NOSE LANDING GEAR RETRACTING CYLINDER BELL-CRANK STOP MPI		1
	2W2B32-28-062	••WASHER - THRUST (NAA)		2
	AN365-820	••NUT -		1
-13	NAS75-4-119	••BUSHING -		1
-14	AN4-26A	••BOLT -		1
	2W2B16-14-062	••WASHER - THRUST (NAA)		2
	AN365-428	••NUT -		1
-15	152-34512-7	•FITTING ASSY - NOSE LDG/GR UPLOCK SUPPORT		1
	HSB7C	••BEARING - (HLF) (SELF-ALIGNING)		1
-16	AN3-5A	•BOLT - (FITTING TO FRAME ATT STA 53)		2
-17	AN3-6A	•BOLT - (FITTING TO FRAME ATT STA 63)		2
	NAS679-A3	•NUT - (AS PER EO 05-5E-6A/261)		4
-18	151-34522	•FITTING - NOSE LANDING GEAR OPERATING CYLINDER BELL-CRANK SUPPORT		1
-19	AN4-10A	•BOLT - (FITTING TO UPLOCK SUP• FTG ATT)		2
-20	AN4-21A	•BOLT - (FITTING TO CHANNEL ATTACHING)		4
	NAS43DD3-48	•SPACER -		1
	AN365-428	•NUT -		6
	NAS679-A4	•NUT - (AS PER EO 05-5E-6A/261)		1
-21	151-34523	•FITTING - NOSE LDG/GR WHEEL DOOR LOCK OPERATING BELL-CRANK SUPPORT		1
	NAS43DD3-52	•SPACER -		1
-22	AN3-21A	•BOLT - (FITTING TO CHANNEL ATTACHING)		3
	AN960-10	•WASHER -		3
	NAS679-A3	•NUT - (AS PER EO 05-5E-6A/261)		3
	151-31730-802	FRAME ASSY - FUSELAGE STA 26 LWR STRUCTURE (SEE SECTION 3)		REF
-23	151-33607	•BRACKET ASSY - LDG/GR EMERGENCY RELEASE NOSE-WHEEL DOOR LOCK BELL-CRANK		1
	4S4D4-12	••SPACER - RIVET (NAA)		1

FIGURE AND INDEX NUMBER	GROUP LANDING GEAR MAJOR ASSEMBLY NOSE LANDING GEAR & DOOR UPLATCH PART NUMBER	1234567 NOMENCLATURE	CODE	UNITS PER ASSY
91 -24	NAS220-9	•SCREW - (BRACKET TO BEAM ATTACHING)		4
	AN960-8	•WASHER -		8
	AN365-832	•NUT -		4
	151-31141-51	•BEAM ASSY - FUSELAGE STA 27-54 PORT (SEE SECTION 3)		REF
-25	140-34522	••FITTING ASSY - NOSE LANDING GEAR EXTENSION CYLINDER ATTACHING		1
	4B20S7-28	•••BUSHING - FLANGED PRESS-FIT (NAA)		1
-26	140-34524	••BOLT - NOSE LDG/GR EXTENSION CYL PIVOT		1
-27	AN3-6A	••BOLT - (FITTING TO BEAM ATTACHING)		2
-28	AN3-12A	••BOLT - (FITTING TO BEAM ATTACHING)		2
	AN960-10	••WASHER -		2
	AN960-10L	••WASHER -		2
	AN365-1032	••NUT -		4
-29	151-58633-9	CYLINDER ASSY - HYDRAULIC NOSE GEAR EXTENSION (SEE SECTION 11)		REF
-30	151-31642-3	CHANNEL - FUSELAGE STA 58 DUCT LOWER PORT (SEE SECTION 3)		REF
		-000-		

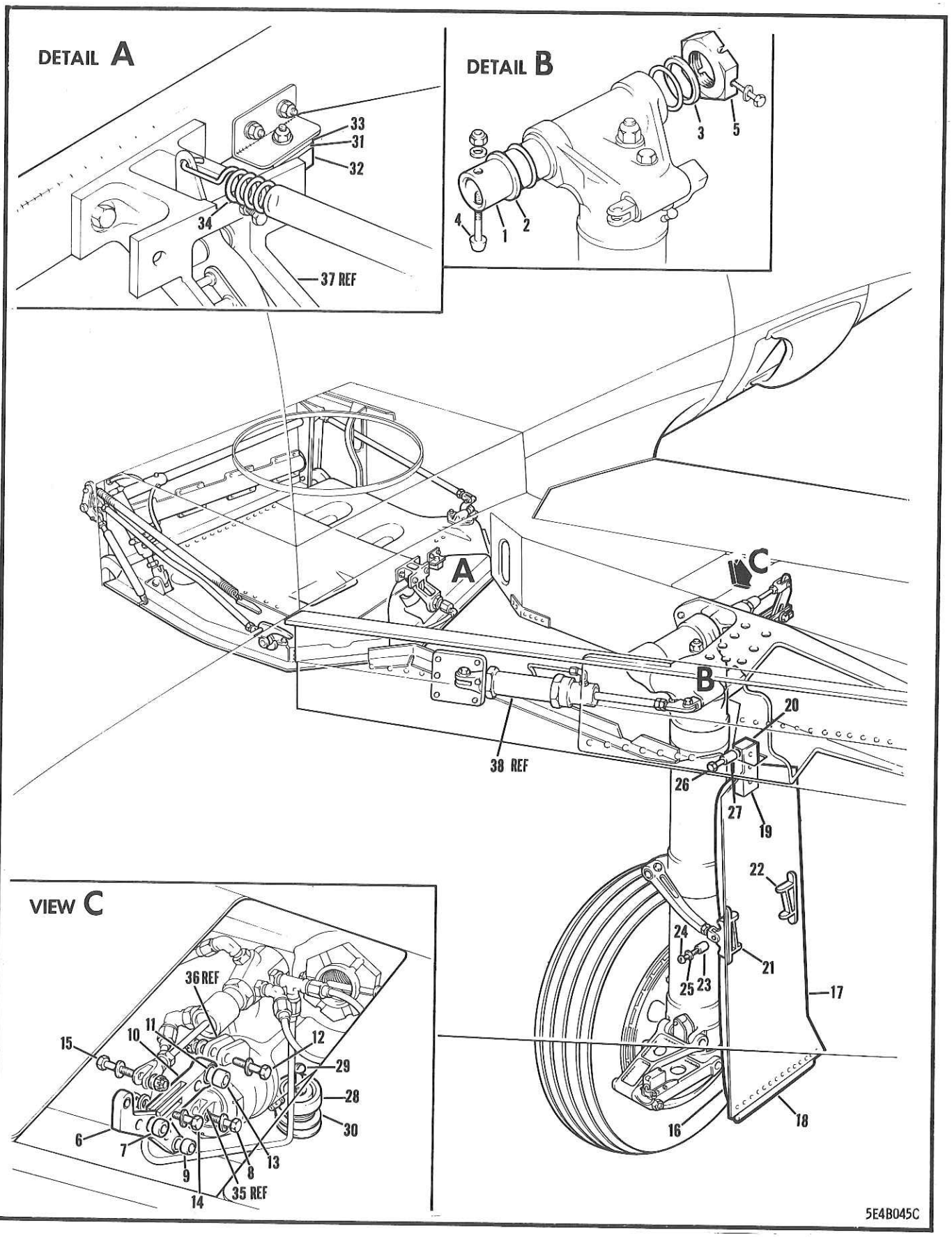

FIGURE 92 MAIN LANDING GEAR

FIGURE AND INDEX NUMBER	GROUP LANDING GEAR MAJOR ASSEMBLY MAIN LANDING GEAR PART NUMBER	1234567 NOMENCLATURE	CODE	UNITS PER ASSY
92 -	151-33001-1	GEAR INSTL - MAIN LANDING LH (SEE FIG. 1)		NP
	151-33001-2	GEAR INSTL - MAIN LANDING RH (SEE FIG. 1)		NP
	140-33301-101	•DOOR ASSY - MAIN LANDING GEAR WHEEL PORT (SEE FIG. 96)		REF
	140-33301-102	•DOOR ASSY - MAIN LANDING GEAR WHEEL STBD (SEE FIG. 96)		REF
	151-33101-31	•CHASSIS ASSY - MAIN LANDING GEAR PORT (SEE FIG. 93)		REF
	151-33101-32	•CHASSIS ASSY - MAIN LANDING GEAR STBD (SEE FIG. 93)		REF
- 1	140-33125-5	•PIN - MAIN LANDING GEAR TRUNNION MPI	001-200	1
	140-33125-9	•PIN - MAIN LANDING GEAR TRUNNION MPI	201-	1
- 2	2W1C114-76-10	•WASHER - PLAIN (NAA)		AR
- 3	2W1-106-80-125	•WASHER - PLAIN (NAA)		1
- 4	NAS146-52	•BOLT - MPI	001-200	1
	EWB-7-42	•BOLT - 12-POINT EXT WRENCHING (NAA) MPI	201-	1
	NAS143-6C	•WASHER -	001-200	1
	NAS143-7C	•WASHER -	201-	1
	NAS143-7	•WASHER -		1
	AN365-624	•NUT -	001-200	1
	AN365-720	•NUT -	201-	1
- 5	140-33126	•NUT - MAIN LANDING GEAR TRUNNION		1
	140-33151	•BELL-CRANK ASSY - M/LDG/GR DOWNLOCK ACTE		1
- 6	140-33151-3	••BELL-CRANK - M/LDG/GR DOWNLOCK ACTUATING		1
- 7	NAS76A5-024	••BUSHING -		1
	4B16CP6-9	••BUSHING - SINTERED OIL IMPREGNATED (NAA)		2
- 8	AN3-10A	•BOLT -	001-100	1
	AN3-10	•BOLT -	101-	1
- 9	NAS72-3-005	•BUSHING -		1
	AN960-10	•WASHER -		1
	AN365-1032	•NUT -	001-100	1
	AN320-3	•NUT -	101-	1
	AN380-1-2	•COTTER-PIN -	101-	1
	140-33152	•ARM ASSY - M/LDG/GR DOWNLOCK ACTUATING BELL-CRANK SUPPORT MPI		1
-10	140-33152-3	••ARM - DOWNLOCK ACTE BELCRK SUPPORT MPI		1
-11	4B16CP8-19	••BEARING - SINTERED OIL IMPREGNATED (NAA)		1
-12	AN5-14A	•BOLT -		1
-13	NAS72-5-010	•BUSHING -		1
	AN960-516	•WASHER -		1
	AN365-524	•NUT -		1
-14	AN5-12	•BOLT -		1
	AN960-516	•WASHER -		1
	AN320-5	•NUT -		1
	AN380-2-2	•COTTER-PIN -		1
-15	AN3-27A	•BOLT -		1
	AN960-10	•WASHER -		1
	AN365-1032	•NUT -		1
	140-33351-1	•DOOR ASSY - MAIN LANDING GEAR STRUT (PORT)		1
	140-33351-2	•DOOR ASSY - MAIN LANDING GEAR STRUT (STBD)		1
-16	140-33351-3	••SKIN - M/LDG/GR STRUT INNER (PORT)		1
	140-33351-4	••SKIN - M/LDG/GR STRUT INNER (STBD)		1
-17	140-33351-5	••SKIN - M/LDG/GR STRUT OUTER (PORT)		1
	140-33351-6	••SKIN - M/LDG/GR STRUT OUTER (STBD)		1
-18	140-33351-7	••STRIP - MAIN LANDING GEAR STRUT		1
	140-33351-13	••ANGLE - MAIN LANDING GEAR STRUT		1
	140-33353-1	••HINGE ASSY - M/LDG/GR STRUT DOOR (PORT)		1
	140-33353-2	••HINGE ASSY - M/LDG/GR STRUT DOOR (STBD)		1
-19	140-33353-3	•••HINGE - M/LDG/GR STRUT DOOR (PORT)		1
	140-33353-4	•••HINGE - M/LDG/GR STRUT DOOR (STBD)		1

FIGURE AND INDEX NUMBER	GROUP LANDING GEAR MAJOR ASSEMBLY MAIN LANDING GEAR PART NUMBER	1234567 NOMENCLATURE	CODE	UNITS PER ASSY
92 -20	4B16CF7-12	•••BUSHING - SINTERED OIL IMPREGNATED (NAA)		2
	140-33351-15	••CLIP - M/LDG/GR STRUT DOOR HINGE (PORT)		1
	140-33351-16	••CLIP - M/LDG/GR STRUT DOOR HINGE (PORT)		1
	140-33351-17	••CLIP - MAIN LDG/GR STRUT DOOR HINGE PORT		1
	140-33351-18	••CLIP - MAIN LDG/GR STRUT DOOR HINGE STBD		1
-21	140-33357-1	••FITTING ASSY - M/LDG/GR STRUT DOOR ACTE LINK FORWARD ATT (PORT)		1
	140-33357-2	••FITTING ASSY - M/LDG/GR STRUT DOOR ACTE LINK FORWARD ATT (STBD)		1
-22	140-33358-1	••FITTING ASSY - M/LDG/GR STRUT DOOR ACTE LINK REAR ATT (PORT)		1
	140-33358-2	••FITTING ASSY - M/LDG/GR STRUT DOOR ACTE LINK REAR ATT (STBD)		1
-23	4B16RP6-8	•••BUSHING - SINTERED OIL IMPREGNATED (NAA)		1
-24	AN23-12	•BOLT - MPI		2
-25	140-33362	•SPACER - MAIN LDG/GR STRUT DOOR LINK MPI		2
	AN960-10	•WASHER -		2
	AN320-3	•NUT -		2
	AN380-2-2	•COTTER-PIN -		2
-26	AN4-15A	•BOLT - MPI		1
-27	NAS72-4-015	•BUSHING -		1
	2W1AL29-24-20	•WASHER - PLAIN (NAA)		AR
	AN960-416	•WASHER -		1
	AN365-428	•NUT -		1
-28	140-33127-800	•STOP - MAIN LANDING GEAR TRUNNION MPI		1
-29	AN23-36A	•BOLT - MPI		1
-30	140-33128-3	•SHIM - MAIN LANDING GEAR TRUNNION STOP		AR
	140-33128-4	•SHIM - MAIN LANDING GEAR TRUNNION STOP		AR
	AN960-10	•WASHER -		1
	AN365-1032	•NUT -		1
	140-33512-1	•STOP ASSY - M/LDG/GR UPLOCK ACTE (PORT)		1
	140-33512-2	•STOP ASSY - M/LDG/GR UPLOCK ACTE (STBD)		1
-31	140-33512-3	••PLATE - MAIN LDG/GR UPLOCK ACTE STOP PORT		1
	140-33512-4	••PLATE - MAIN LDG/GR UPLOCK ACTE STOP STBD		1
-32	140-33512-5	••RUBBER - MAIN LDG/GR UPLOCK ACTE STOP		1
	NAS205-9	••SCREW -		1
-33	140-33513	•SHIM - MAIN GEAR UPLOCK STOP		2
	AN960-10	•WASHER -		AR
	AN365-1032	•NUT -		2
-34	151-33515	•SPRING - MAIN LANDING GEAR UPLOCK LATCH		2
-35	140-33145	SHAFT - M/LDG/GR DOWNLOCK (SEE FIG. 99)		1
-36	140-33149	SLEEVE ASSY - MAIN LANDING GEAR DOWNLOCK (SEE FIG. 99)		REF
-37	151-33512-1	FITTING - MAIN LANDING GEAR UPLOCK SUP. PORT (SEE FIG. 98)		REF
-38	151-58627-3	CYLINDER ASSY - MAIN LDG/GR HYD OPR COMPL PORT (SEE SECTION 11)		REF
		(CONTINUED SEE FIG. 97)		

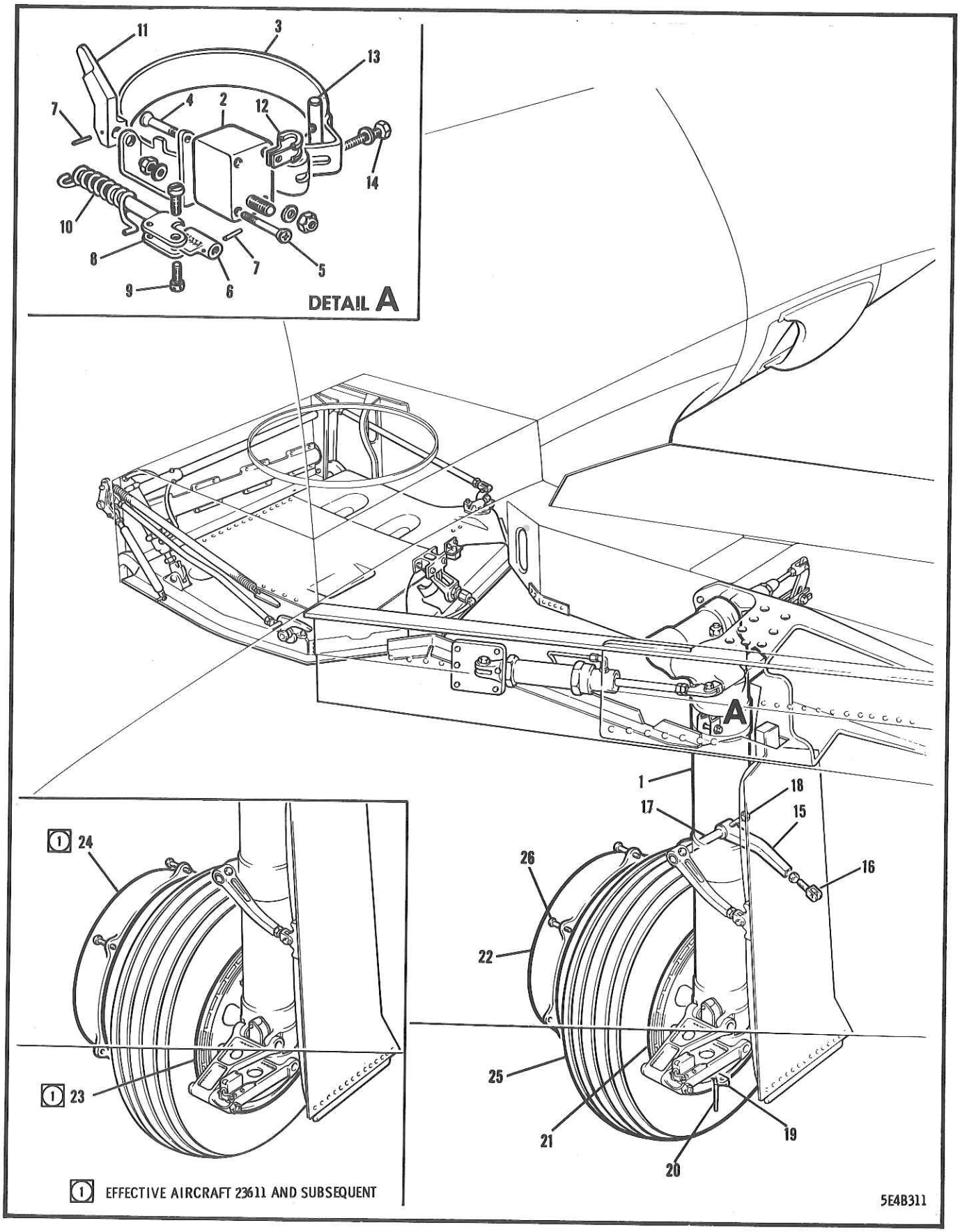

FIGURE 93 MAIN LANDING GEAR CHASSIS

FIGURE AND INDEX NUMBER	GROUP LANDING GEAR MAJOR ASSEMBLY MAIN LANDING GEAR CHASSIS PART NUMBER	1234567 NOMENCLATURE	CODE	UNITS PER ASSY
93 -	151-33101-31	CHASSIS ASSY - MAIN LANDING GEAR PORT (SEE FIG. 92)	001-200	1
	151-33101-801	CHASSIS ASSY - MAIN LANDING GEAR PORT	201-	1
	151-33101-32	CHASSIS ASSY - MAIN LANDING GEAR STBD (SEE FIG. 92)	001-200	1
	151-33101-802	CHASSIS ASSY - MAIN LANDING GEAR STBD	201-	1
	176-33801-801	•INDICATING & SEQUENCING MECH INSTL - MAIN LANDING GEAR PORT (SEE FIG. 94)		REF
	176-33801-802	•INDICATING & SEQUENCING MECH INSTL - MAIN LANDING GEAR STBD (SEE FIG. 94)		REF
- 1	9151L	•STRUT ASSY - MAIN GEAR PORT (SEE FIG. 95)		REF
	9151R	•STRUT ASSY - MAIN GEAR STBD (SEE FIG. 95)		REF
	151-54200-11	•CLAMP ASSY - M/LDG/GR DOWN POSITION IND SWITCH PORT (ELEC)		1
	151-54200-12	•CLAMP ASSY - M/LDG/GR DOWN POSITION IND SWITCH STBD (ELEC)		1
- 2	152-54201-60	••SWITCH ASSY - ELECTRICAL THREE-UNIT LIMIT PORT (SEE SECTION 10)		REF
	152-54201-70	••SWITCH ASSY - ELECTRICAL THREE-UNIT LIMIT STARBOARD (SEE SECTION 10)		REF
- 3	151-54211-1	••CLAMP ASSY - M/LDG/GR DOWN POSITION IND SWITCH PORT (ELEC)		1
	151-54211-2	••CLAMP ASSY - M/LDG/GR DOWN POSITION IND SWITCH STBD (ELEC)		1
	151-54211-3	•••BAND - DOWN POSITION INDICATOR SW PORT		1
	151-54211-4	•••BAND - DOWN POSITION INDICATOR SW STBD		1
	151-54211-5	•••BRACKET - DOWN POSITION IND SWITCH PORT		1
	151-54211-6	•••BRACKET - DOWN POSITION IND SWITCH STBD		1
- 4	AN507-632R32	••SCREW -		1
	AN960D6L	••WASHER -		1
	AN364-632	••NUT -		2
- 5	AN515-6R32	••SCREW -		1
- 6	151-54249	••SLEEVE ASSY - M/LDG/GR SEQ SWITCH (ELEC)		1
- 7	AN385-60-5	••PIN -		2
- 8	151-54248	••SHAFT ASSY - M/LDG/GR SEQUENCE SW (ELEC)		1
	151-54248-3	•••SHAFT - M/LDG/GR SEQUENCE SWITCH (ELEC)		1
	151-54247	•••ARM - M/LDG/GR SEQUENCE SW ADJ (ELEC)		1
- 9	AN500A8-7	••SCREW -		2
-10	151-54333-1	••SPRING - M/LDG/GR POSITION INDICATOR SEQUENCE SWITCH PORT (ELEC)		1
	151-54333-2	••SPRING - M/LDG/GR POSITION INDICATOR SEQUENCE SWITCH STBD (ELEC)		1
	AN960D416L	••WASHER -		1
	AN380-2-3	••COTTER-PIN -		1
-11	151-54226-1	••ARM - M/LDG/GR DOWNLOCK SEQUENCE SWITCH PORT (ELEC)		1
	151-54226-2	••ARM - M/LDG/GR DOWNLOCK SEQUENCE SWITCH STARBOARD (ELEC)		1
-12	AN742D8C	••CLAMP -		1
-13	140-54104	•PIN - M/LDG/GR DOWN POSN IND SWITCH CLAMP		1
-14	5B1-15DH	•BOLT - ADJUSTMENT (1/8) (NAA)		1
	AN960-10	•WASHER -		1
	AN380-2-4	•COTTER-PIN -		1
	151-33359	•LINK ASSY - M/LDG/GR STRUT DOOR ACTUATOR		2
-15	172-33360-3	••LINK - MAIN LANDING GEAR STRUT DOOR		1
-16	140-33361	••END - M/LDG/GR STRUT DOOR LINK MPI		1
	AN316-5R	••NUT -		1
-17	140-33356-5	•PIN - M/LDG/GR STRUT DOOR LINK ATTACHING		1
	AN960-1016	•WASHER -		6
	2W1LB40-38-10	•WASHER - PLAIN (NAA)		AR

FIGURE AND INDEX NUMBER	GROUP / MAJOR ASSEMBLY / PART NUMBER	LANDING GEAR / MAIN LANDING GEAR CHASSIS / 1234567 NOMENCLATURE	CODE	UNITS PER ASSY
93 -18	AN3-14A	•BOLT -		2
	AN960-10	•WASHER -		2
	AN365-1032	•NUT -		2
-19	140-58373-1	•BRACKET ASSY - HYDRAULIC BRAKE M/LDG/GR AXLE PORT		1
	140-58373-2	•BRACKET ASSY - HYDRAULIC BRAKE M/LDG/GR AXLE STBD		1
-20	140-54152-10	•GROUND ASSY - ELECTRICAL STATIC (PORT)		1
	AAF41A4104	•NUT - GROUNDING (PORT)		1
-21	147063	•WHEEL - HI-PRESSURE TYPE 7 (G•F•E•)	001-610	1
-22	147062MCR	•BRAKE ASSY - WHEEL (G•F•E•)	001-610	1
	13B-41018	•WHEEL & BRAKE ASSY - (MAIN GEAR)	611-	1
-23	13B-41018-2	••WHEEL ASSY - (MAIN GEAR)	611-	1
-24	13B-41018-4	••BRAKE ASSY - (MAIN GEAR)	611-	1
-25	MIL-C-5041	•CASING - AIRCRAFT PNEUMATIC TIRE (26X6.6 MAIN 14PR) (G•F•E•)		1
	MIL-T-5014	•TUBE - AIRCRAFT PNEUMATIC TIRE (G•F•E•)		1
-26	AN8-14A	•BOLT -		12
	AN960-816	•WASHER -		24
	AN363-820	•NUT -		12

-000-

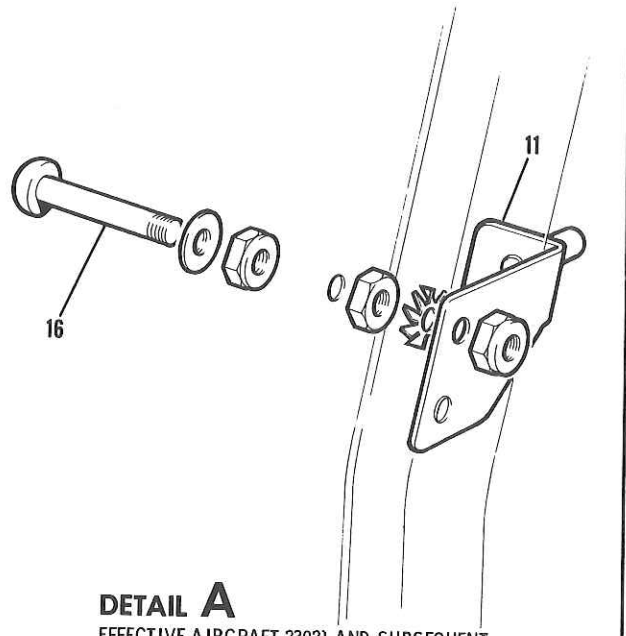

DETAIL A
EFFECTIVE AIRCRAFT 23021 AND SUBSEQUENT

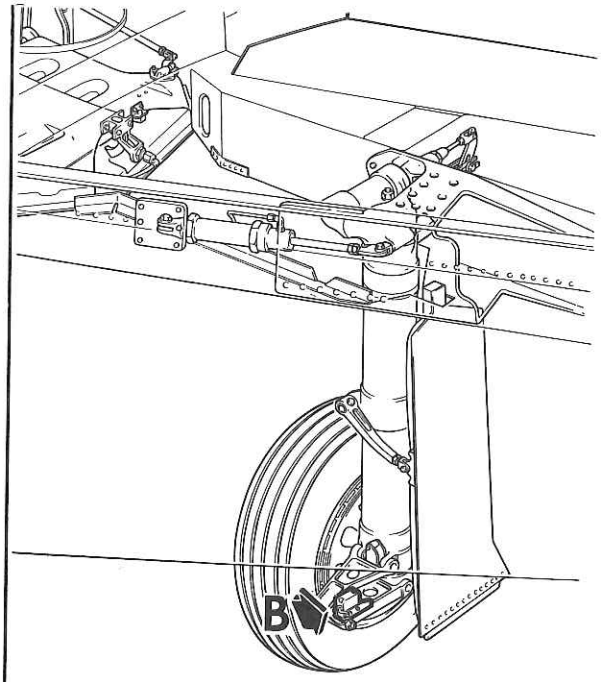

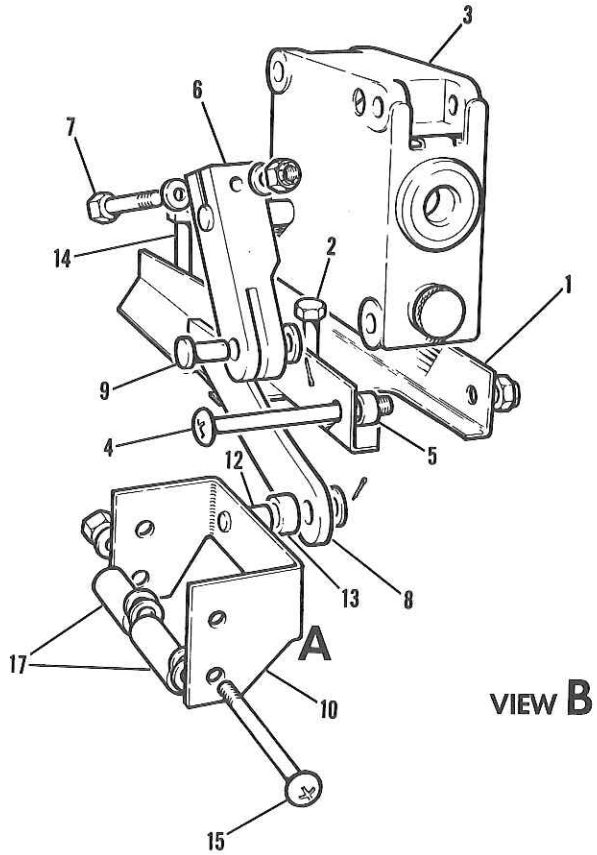

VIEW B

5E4B240C

FIGURE 94 MAIN LANDING GEAR INDICATING & SEQUENCING MECHANISM

FIGURE AND INDEX NUMBER	GROUP LANDING GEAR MAJOR ASSEMBLY MAIN GEAR INDICATING & SEQUENCING MECHANISM PART NUMBER	1234567 NOMENCLATURE	CODE	UNITS PER ASSY
94 -	176-33801-801	INDICATING & SEQUENCING MECHANISM INSTL - MAIN LANDING GEAR LH (SEE FIG. 93)		NP
	176-33801-802	INDICATING & SEQUENCING MECHANISM INSTL - MAIN LANDING GEAR RH (SEE FIG. 93)		NP
	176-33831-1	.SAFETY MECHANISM ASSY - M/LDG/GR GRD PORT	001-020	1
	176-33831-11	.SAFETY MECHANISM ASSY - M/LDG/GR GRD PORT	021-	1
	176-33831-2	.SAFETY MECHANISM ASSY - M/LDG/GR GRD STBD	001-020	1
	176-33831-12	.SAFETY MECHANISM ASSY - M/LDG/GR GRD STBD	021-	1
- 1	176-33832-1	..BRACKET ASSY - MAIN LANDING GEAR GROUND SAFETY MECH PORT		1
	176-33832-2	..BRACKET ASSY - MAIN LANDING GEAR GROUND SAFETY MECH STBD		1
- 2	AN3-11A	..BOLT -		1
- 3	1HA1LH	..MICROSWITCH - (MSC) (PORT)		1
	1HA1RH	..MICROSWITCH - (MSC) (STBD)		1
- 4	AN520-10R26	..SCREW -		2
- 5	NAS43C3-6	..SPACER -		2
	AN364-1032	..NUT -		2
- 6	176-33833	..ARM - M/LDG/GR GROUND SAFETY MECHANISM	001-371	1
	176-33833-10	..ARM - M/LDG/GR GROUND SAFETY MECHANISM	372-	1
- 7	AN4-5A	..BOLT -		1
	AN960D416L	..WASHER -		2
	AN364-428	..NUT -		1
- 8	176-33834	..LINK - M/LDG/GR GROUND SAFETY MECHANISM		1
- 9	AN393-11	..PIN -		1
	AN960D10L	..WASHER -		1
	AN380-2-2	..COTTER-PIN -		1
-10	176-33835-1	..CLIP ASSY - M/LDG/GR GROUND SAF MECH LH	001-020	1
-11	191-33835-1	..CLIP ASSY - M/LDG/GR GROUND SAF MECH LH	021-	1
	176-33835-2	..CLIP ASSY - M/LDG/GR GROUND SAF MECH RH	001-020	1
	191-33835-2	..CLIP ASSY - M/LDG/GR GROUND SAF MECH RH	021-	1
-12	AN393-11	...PIN -	001-020	1
	AN393-13	...PIN -	021-	1
-13	NAS43C3-14	..SPACER -		1
	AN960D10L	..WASHER -		1
	AN380-2-2	..COTTER-PIN -		1
-14	AN3-11A	.BOLT -		1
	NAS43C3-30	.SPACER -		2
	AN960D10L	.WASHER -		AR
	AN365-1032	.NUT -		2
-15	AN520-10R30	.SCREW -	001-020	2
-16	AN520-10R20	.SCREW -	021-	2
-17	NAS43C3-32	.SPACER -	001-020	4
	AN960D10	.WASHER -	001-020	6
	2W1AL13-14-32	.WASHER - PLAIN (NAA)	001-020	4
	2W18-10L	.WASHER - FLAT (NAA)	021-	2
	AN936B10	.WASHER -	021-	2
	AN365-1032	.NUT -	001-020	2
	AN365-1032	.NUT -	021-	4
	AN315-3	.NUT -	021-	2

-000-

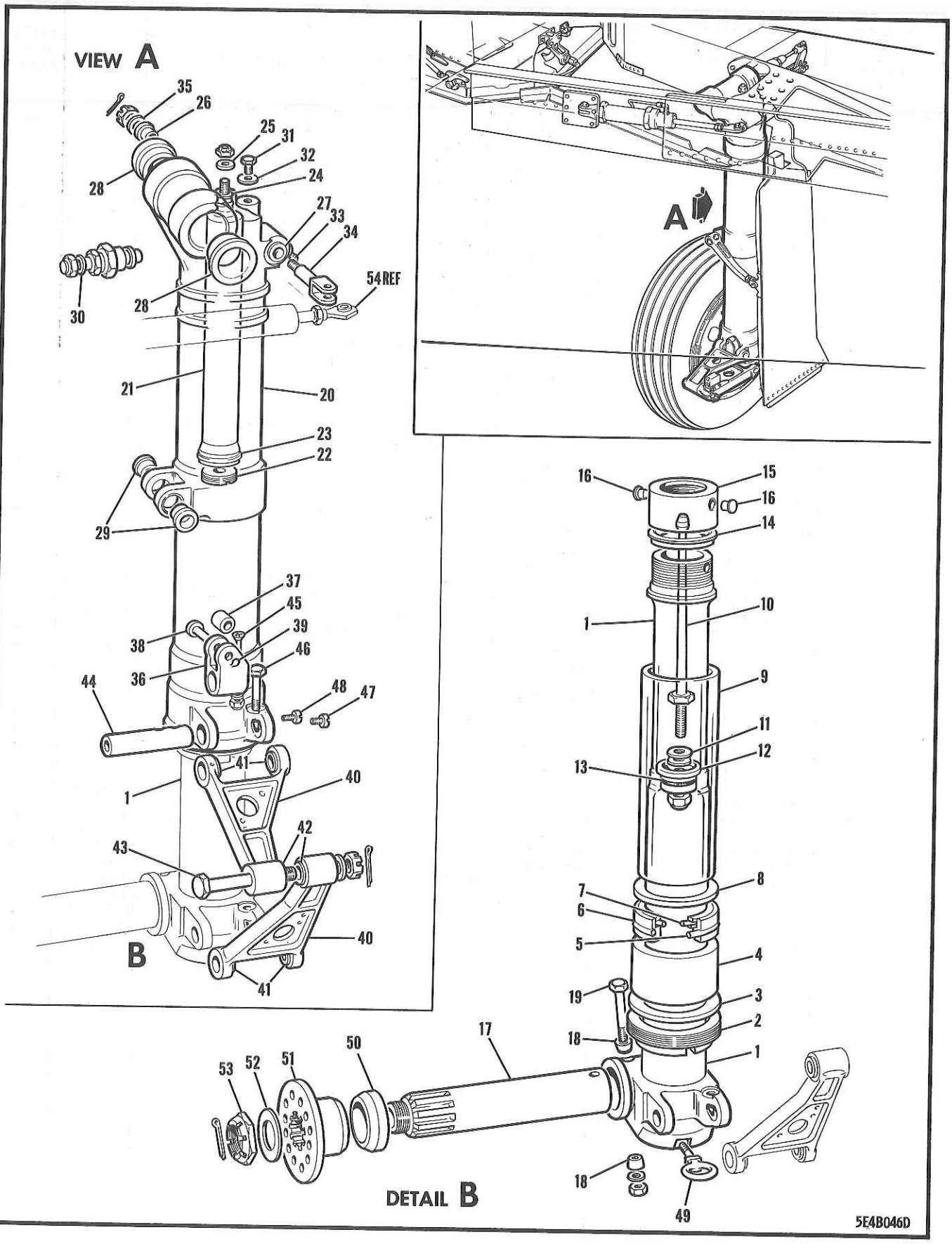

FIGURE 95 MAIN LANDING GEAR STRUT

FIGURE AND INDEX NUMBER	GROUP LANDING GEAR MAJOR ASSEMBLY MAIN LANDING GEAR STRUT PART NUMBER	1234567 NOMENCLATURE	CODE	UNITS PER ASSY
95 -	9151L	STRUT ASSY - MAIN LANDING GEAR (PORT) (SEE FIG. 93)		1
	9151R	STRUT ASSY - MAIN LANDING GEAR (STBD) (SEE FIG. 93)		1
	9151-104L	.PISTON ASSY - MAIN LANDING GEAR STRUT (PORT)		1
	9151-104R	.PISTON ASSY - MAIN LANDING GEAR STRUT (STBD)		1
- 1	9147-4L	..PISTON - MAIN LANDING GEAR (PORT)		1
	9147-4R	..PISTON - MAIN LANDING GEAR (STBD)		1
- 2	8657-48	..NUT - GLAND		1
- 3	AN6231A33	..SCRAPER -		1
- 4	8657-9	..BEARING - (PACKING)		1
- 5	AN6227B47	..PACKING -		1
- 6	8657-54	..ADAPTER - PACKING		1
	AN6246-44	..RING -		2
- 7	AN6227B44	..PACKING -		1
- 8	8657-6	..WASHER - PACKING		1
- 9	8657-10	..FOLLOWER - (PACKING)		1
-10	9151-13	..PIN ASSY - METERING		1
-11		...DELETED		
-12		...DELETED		
	AN365D820	...NUT -		1
-13	AN6227B33	..PACKING -		1
	AN6246-33	..RING -		1
-14	8657A-5	..VALVE - RECOIL		1
-15	8657A3	..HEAD - PISTON		1
-16	140-12	..PISTON - PIN-HEAD		2
-17	9147-85	..AXLE -		1
-18	9147-42	..BUSHING - TAPERED		4
-19	AN4-35	..BOLT -		2
	AN960-416	..WASHER -		2
	AN310-4	..NUT -		2
	AN380C2-2	..COTTER-PIN -		2
	9147-102L	.CYLINDER ASSY - MAIN LANDING GEAR STRUT (PORT)		1
	9147-102R	.CYLINDER ASSY - MAIN LANDING GEAR STRUT (STARBOARD)		1
-20	9147-2L	..CYLINDER - SHOCK STRUT (PORT)		1
	9147-2R	..CYLINDER - SHOCK STRUT (STARBOARD)		1
	9147-126	..PLUNGER ASSY - SHOCK STRUT CYLINDER		1
-21	9147-26	...TUBE - PLUNGER		1
-22	9147-23	...PLATE - ORIFICE		1
-23	101-31	...RING - PLUNGER HEAD		1
-24	AN6227B12	..PACKING -		1
	AN6246-12	..RING -		1
-25	8657-50	..WASHER -		1
	AN365D820	..NUT -		1
-26	9147-37	..BUSHING - UPPER LUG		1
-27	9147-39	..BUSHING - UPPER LUG		1
-28	8657-62	..BUSHING - TRUNNION		2
-29	8657-38	..BUSHING - LOWER LUG		2
-30	AN6287-1	.VALVE -		1
-31	AN814-4	.PLUG -		1
-32	AN6290-4	.GASKET -		1
-33	NAS2-201	.FITTING -		1
-34	9147-66	.PIN - RETRACTING CYLINDER PIVOT MPI	001-370	1
	13A-41010	.PIN - RETRACTING CYLINDER PIVOT MPI	371-490	1

FIGURE AND INDEX NUMBER	GROUP LANDING GEAR MAJOR ASSEMBLY MAIN LANDING GEAR STRUT PART NUMBER	1234567 NOMENCLATURE	CODE	UNITS PER ASSY
95 -	13A-41010-3	•PIN - RETRACTING CYLINDER PIVOT MPI	491-	1
		OR		
	9147-66C	•PIN - RETRACTING CYLINDER PIVOT MPI	491-	
		OR		
	8657A-66	•PIN - RETRACTING CYLINDER PIVOT MPI	491-	
		OR		
	8657A-66A	•PIN - RETRACTING CYLINDER PIVOT MPI	491-	
		OR		
	8657A-66B	•PIN - RETRACTING CYLINDER PIVOT MPI	491-	
		OR		
	13A-41011	•PIN - RETRACTING CYLINDER PIVOT MPI	491-	
-35	8657A-67	•WASHER - PIVOT PIN		1
	AN320-8	•NUT -		1
	AN380-3-4	•COTTER-PIN -		1
	9033-170L	•ROLLER ASSY - MAIN LANDING GEAR STRUT (PORT)	001-490	1
	9033-170AL	•ROLLER ASSY - MAIN LANDING GEAR STRUT (PORT)	491-	1
	9033-170R	•ROLLER ASSY - MAIN LANDING GEAR STRUT (STARBOARD)	001-490	1
	9033-170AR	•ROLLER ASSY - MAIN LANDING GEAR STRUT (STARBOARD)	491-	1
-36	9033-70L	••BRACKET - ROLLER (PORT)		1
	9033-70BL	••BRACKET - ROLLER (PORT)	491-691	1
		OR		
	9033-70BL-800	••BRACKET - ROLLER (PORT)	491-691	
	9033-70CL	••BRACKET - ROLLER (PORT)	692-	1
		OR		
	9033-70CL-800	••BRACKET - ROLLER (PORT)	692-	
	9033-70R	••BRACKET - ROLLER (STARBOARD)	001-490	1
	9033-70BR	••BRACKET - ROLLER (STARBOARD)	491-691	1
		OR		
	9033-70BR-800	••BRACKET - ROLLER (STARBOARD)	491-691	
	9033-70CR	••BRACKET - ROLLER (STARBOARD)	692-	1
		OR		
	9033-70CR-800	••BRACKET - ROLLER (STARBOARD)	692-	
-37	74164	••BEARING - (RBC)		1
		OR		
	9881	••BEARING - (TOR)		
-38	8657-71	••PIN - BEARING RETAINING MPI		1
-39	NAS51-31	••RING -		1
	9147-146	•ARM ASSY - COMPLETE TORQUE(M/LDG/GR STRUT)		1
	9147-46	••ARM ASSY - TORQUE		2
-40	9147-46-1	•••ARM - TORQUE		1
-41	9147-51	•••BUSHING - TORQUE ARM END		2
-42	8657-53	•••BUSHING - TORQUE ARM CENTRE		2
-43	8657A-45	••BOLT - TORQUE ARM CENTRE		1
	AN960-1216L	••WASHER -		1
	AN320-12	••NUT -		1
	AN380C4-6	••COTTER-PIN -		1
-44	9147-40	•PIN - TORQUE ARM END		2
-45	AN509-416R28	•SCREW -		1
	AN960A416	•WASHER -		1
	AN365-428	•NUT -		1
-46	AN4-21A	•BOLT -		2
	AN960-416	•WASHER -		2
	AN365-428	•NUT -		2
-47	8657-55	•LOCK-SCREW -		1
	NAS2-101	•FITTING -		11
-48	AN501A10-5	•SCREW -		1

FIGURE AND INDEX NUMBER	GROUP LANDING GEAR MAJOR ASSEMBLY MAIN LANDING GEAR STRUT PART NUMBER	1234567 NOMENCLATURE	CODE	UNITS PER ASSY
95 -49	9033-89	•EYE - TOWING		1
	AN960-816	•WASHER -		1
	AN310-8	•NUT -		1
	AN380C3-3	•COTTER-PIN -		1
-50	8419-63	•COLLAR - AXLE		1
-51	9147-61	•FLANGE - BRAKE		1
-52	8657-65	•WASHER - AXLE		1
-53	AN7502-32	•NUT -		1
	AN380C5-3	•COTTER-PIN -		1
	13-71054	•NAME-PLATE - LANDING GEAR		1
	EQ1009D	•PLATE - NAME & INSTRUCTION		1
-54	151-58180	ROD-END ASSY - HYD M/LDG/GR CYLINDER OPR (SEE SECTION 11)		REF
		-000-		

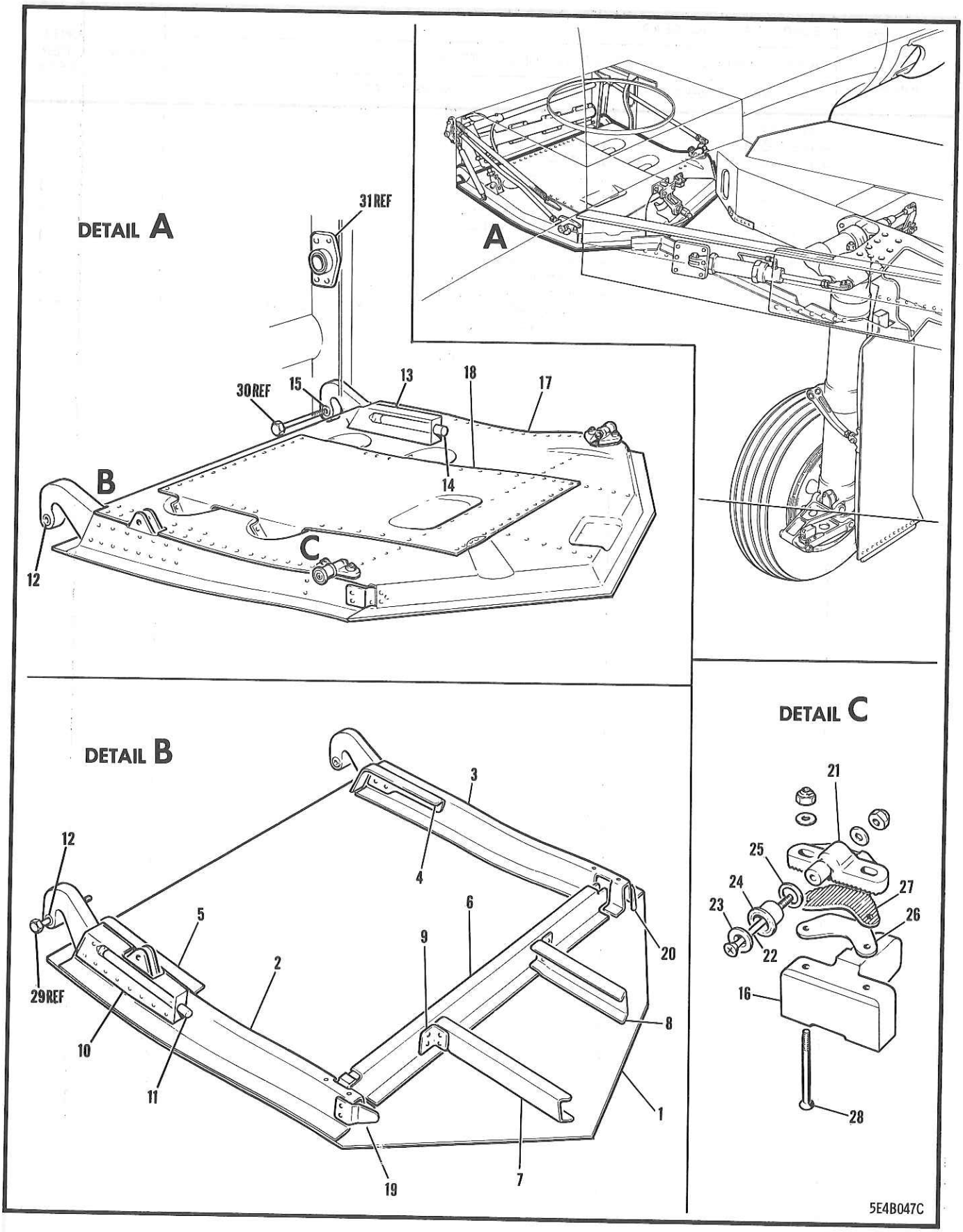

FIGURE 96 MAIN LANDING GEAR WHEEL DOOR

FIGURE AND INDEX NUMBER	GROUP LANDING GEAR MAJOR ASSEMBLY MAIN LANDING GEAR WHEEL DOOR PART NUMBER	1234567 NOMENCLATURE	CODE	UNITS PER ASSY
96 -	140-33301-101	DOOR ASSY - MAIN LANDING GEAR WHEEL PORT (SEE FIG. 92)		1
	140-33301-102	DOOR ASSY - MAIN LANDING GEAR WHEEL STBD (SEE FIG. 92)		1
	140-33301-141	.DOOR ASSY - MAIN LANDING GEAR WHEEL (PORT)		1
	140-33301-142	.DOOR ASSY - MAIN LANDING GEAR WHEEL (STBD)		1
	140-33301-151	..SKIN ASSY - M/LDG/GR WHEEL DOOR OUTER (PORT)		1
	140-33301-152	..SKIN ASSY - M/LDG/GR WHEEL DOOR OUTER (STARBOARD)		1
- 1	140-33301-5	...SKIN - M/LDG/GR WHEEL DOOR OUTER (PORT)		1
	140-33301-6	...SKIN - M/LDG/GR WHEEL DOOR OUTER (STBD)		1
- 2	140-33301-9	...CHANNEL - M/LDG/GR WHEEL DOOR FWD (PORT)		1
	140-33301-10	...CHANNEL - M/LDG/GR WHEEL DOOR FWD (STBD)		1
- 3	140-33301-113	...CHANNEL - M/LDG/GR WHEEL DOOR REAR (PORT)		1
	140-33301-114	...CHANNEL - M/LDG/GR WHEEL DOOR REAR (STARBOARD)		1
- 4	140-33301-15	...CLIP - M/LDG/GR WHEEL DOOR UPPER SKIN TO CHANNEL ATTACHING (PORT)		1
	140-33301-16	...CLIP - M/LDG/GR WHEEL DOOR UPPER SKIN TO CHANNEL ATTACHING (STARBOARD)		1
- 5	140-33301-17	...CLIP - M/LDG/GR WHEEL DOOR UPPER SKIN TO CHANNEL ATTACHING (PORT)		1
	140-33301-18	...CLIP - M/LDG/GR WHEEL DOOR UPPER SKIN TO CHANNEL ATTACHING (STARBOARD)		1
- 6	140-33301-107	...BEAM - MAIN LANDING GEAR WHEEL DOOR (PORT)		1
	140-33301-108	...BEAM - MAIN LANDING GEAR WHEEL DOOR (STARBOARD)		1
- 7	140-33301-19	...CHANNEL - M/LDG/GR WHEEL DOOR FORWARD (PORT)		1
	140-33301-20	...CHANNEL - M/LDG/GR WHEEL DOOR FORWARD (STARBOARD)		1
- 8	140-33301-23	...CHANNEL - M/LDG/GR WHEEL DOOR REAR (PORT)		1
	140-33301-24	...CHANNEL - M/LDG/GR WHEEL DOOR REAR (STARBOARD)		1
- 9	140-33301-21	...CLIP - MAIN LANDING GEAR WHEEL DOOR BEAM TO CHANNEL ATTACHING		2
	140-33302	...HINGE ASSY - M/LDG/GR WHEEL DOOR - FWD		1
-10	140-33302-3	....HINGE - M/LDG/GR WHEEL DOOR (FORWARD)		1
-11	140-33302-4	....PLUG - MAIN LDG/GR WHEEL DOOR HINGE		1
-12	4B16RP7-24	....BEARING - SINTERED OIL IMPG (NAA)		1
	140-33303	...HINGE ASSY - M/LDG/GR WHEEL DOOR (REAR)		1
-13	140-33303-3	....HINGE - MAIN LDG/GR WHEEL DOOR (REAR)		1
-14	140-33303-4	....PLUG - MAIN LDG/GR WHEEL DOOR HINGE		1
-15	4B16CF4-9	....BEARING - SINTERED OIL IMPG (NAA)		1
-16	140-33304	...BLOCK - MAIN LANDING GEAR WHEEL DOOR LOCK BACK-UP (FORWARD)		1
	140-33305-3	...BLOCK - MAIN LDG/GR WHEEL DOOR LOCK BACK-UP (REAR) (PORT)		1
	140-33305-4	...BLOCK - MAIN LDG/GR WHEEL DOOR LOCK BACK-UP (REAR) (STARBOARD)		1
-17	140-33301-103	..SKIN - MAIN LDG/GR WHEEL DOOR INNER (PORT)		1
	140-33301-104	..SKIN - MAIN LDG/GR WHEEL DOOR INNER (STBD)		1
-18	140-33301-11	..STRIP - MAIN LDG/GR WHEEL DOOR INNER (PORT)		1

FIGURE AND INDEX NUMBER	GROUP LANDING GEAR MAJOR ASSEMBLY MAIN LANDING GEAR WHEEL DOOR PART NUMBER	1234567 NOMENCLATURE	CODE	UNITS PER ASSY
96 -	140-33301-12	••STRIP - MAIN LDG/GR WHEEL DOOR INNER (STARBOARD)		1
-19	140-33301-25	•CLIP - MAIN LDG/GR WHEEL DOOR CHANNEL TO INNER SKIN ATTACHING (PORT)		1
	140-33301-26	•CLIP - MAIN LDG/GR WHEEL DOOR CHANNEL TO INNER SKIN ATTACHING (STARBOARD)		1
-20	140-33301-27	•CLIP - MAIN LDG/GR WHEEL DOOR CHANNEL TO INNER SKIN ATTACHING (PORT)		1
	140-33301-28	•CLIP - MAIN LDG/GR WHEEL DOOR CHANNEL TO INNER SKIN ATTACHING (STARBOARD)		1
	140-33306	•LOCK ASSY - M/LDG/GR WHEEL DOOR (FORWARD)		1
	140-33307	•LOCK ASSY - MAIN LDG/GR WHEEL DOOR (REAR)		1
-21	140-33309	••FITTING - MAIN LANDING GEAR WHEEL DOOR LOCK MPI (FORWARD)		1
	140-33310	••FITTING - MAIN LANDING GEAR WHEEL DOOR LOCK MPI (REAR)		1
-22	AN509-10-34	••SCREW - (FORWARD)		1
	AN509-10-37	••SCREW - (REAR)		1
-23	151-33307	••WASHER - M/LDG/GR WHEEL DOOR FORWARD LOCK		1
	140-33308	••ROLLER ASSY - MAIN LANDING GEAR WHEEL DOOR LOCK MPI		1
-24	140-33308-3	•••HOUSING - MAIN WHEEL DOOR LOCK ROLLER MPI		1
	B-812	•••NEEDLE-BEARING - DRAWN CUP (TOR)		1
-25	2W1-33-28-31	••WASHER - PLAIN (NAA)		1
	AN960-10	••WASHER -		1
	AN365-1032	••NUT -		1
-26	140-33312	•SHIM - MAIN LANDING GEAR WHEEL DOOR LOCK		AR
-27	140-33311	•LOCK PLATE - MAIN LANDING GEAR WHEEL DOOR		2
-28	AN509-416-43	•SCREW - (FORWARD)		2
	AN509-416-47	•SCREW - (REAR)		2
	A3475-020	•WASHER - FLAT-HEAD SCREW (TIN)		4
	AN960-416	•WASHER -		4
	AN365-428	•NUT -		4
-29	AN4-20A	BOLT - MPI (HINGE ATTACHING) (SEE FIG. 97)		REF
-30	AN4-15A	BOLT - MPI (HINGE ATTACHING) (SEE FIG. 97)		REF
-31	140-33536	HOUSING ASSY - M/LDG/GR WHEEL DOOR LOCK TORQUE SHAFT REAR BEARING (SEE SECTION 3)		REF

-000-

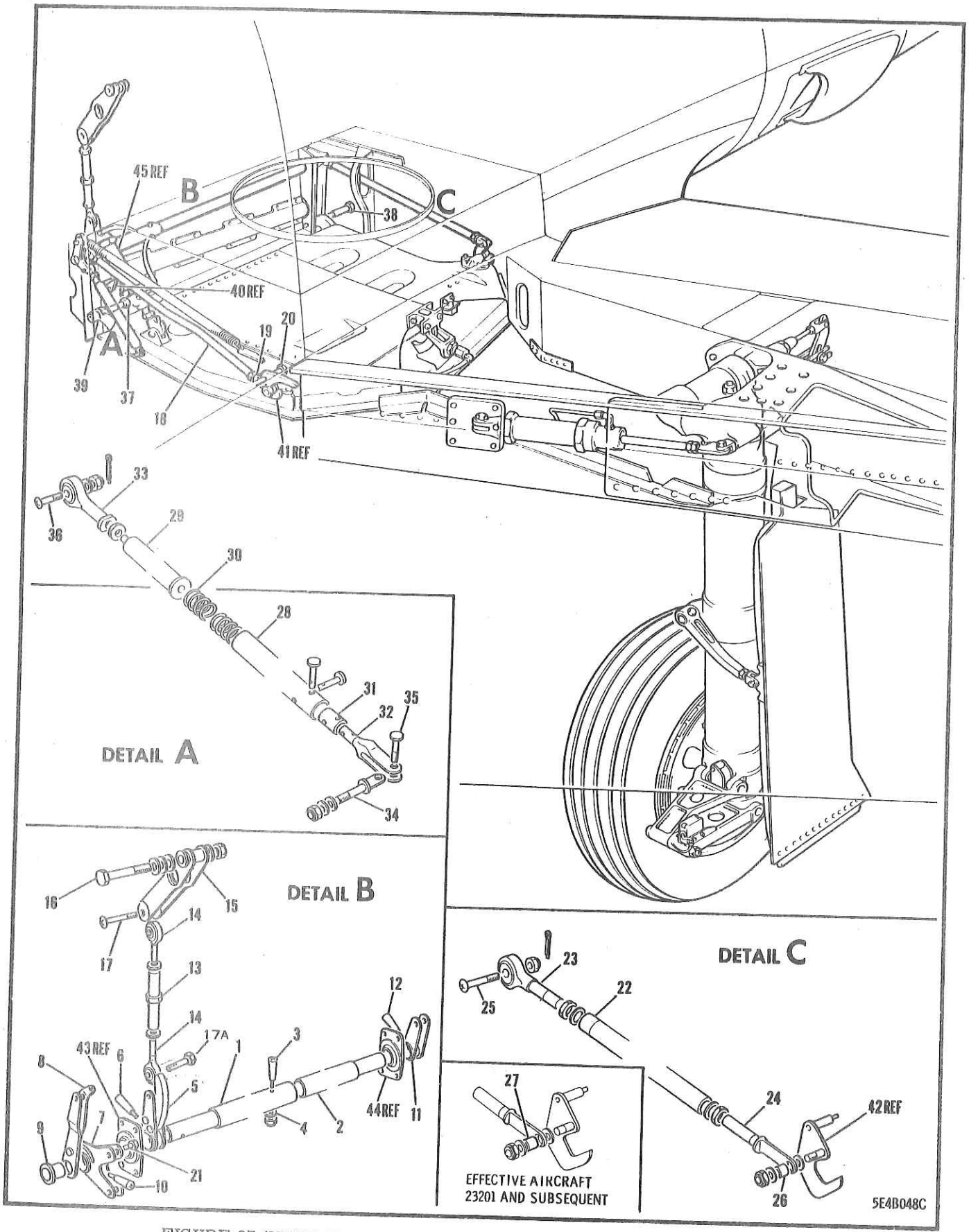

FIGURE 97 (ISSUE 1) MAIN LANDING GEAR WHEEL DOOR MECHANISM

Figure and Index Number	Part	Group LANDING GEAR Major Assembly MAIN LANDING GEAR WHEEL DOOR MECHANISM 1 2 3 4 5 6 7 Nomenclature	Usage on Code	Units per Assy
97 -	151-33001-1	Gear Instl - Main Landing (Port) (See Fig. 92)	REF	Ref
	151-33001-2	Gear Instl - Main Landing (Stbd) (See Fig. 92)	REF	Ref
- 1	140-33532	Shaft Assy - Main Wheel Door Lock Forward Torque	1	1
- 2	140-33533	Shaft Assy - Main Wheel Door Lock Rear Torque	1	1
- 3	AN386-2-9A	Pin -	2	2
- 4	AN975-3	Washer -	2	2
	AN365-1032	Nut -	2	2
- 5	140-33537	Bell-Crank Assy - Main Wheel Door Lock Torque Shaft Actuating MPI	1	1
- 6	AN386-3-8A	Pin - MPI	1	1
	AN975-4	Washer -	1	1
	AN364-428	Nut -	1	1
- 7	140-33538-1	Bell-Crank Assy - Main Wheel Door Fwd Lock Actuating (Port)	1	1
	140-33538-2	Bell-Crank Assy - Main Wheel Door Fwd Lock Actuating (Stbd)	1	1
- 8	140-33619-1	Crank Assy - Landing Gear Emy Release LH	1	1
	140-33619-2	Crank Assy - Landing Gear Emy Release RH	1	1
- 9	140-33551	Pin - M/LDG/GR Emy Release Crank Retaining	1	1
- 10	AN386-3-8A	Pin -	1	1
	AN975-4	Washer -	1	1
	AN364-428	Nut -	1	1
- 11	140-33539	Bell-Crank Assy - Main Wheel Door Rear Lock Actuating	1	1
- 12	AN386-2-6A	Pin -	1	1
	AN975-3	Washer -	1	1
	AN364-1032	Nut -	1	1
- 13	161-33548	Rod Assy - M/LDG/GR Wheel Door Lock Opr	1	1
	161-33548-3	Rod - M/LDG/GR Wheel Door Lock Opr MPI	1	1
- 14	M34-14	Rod End - Unibal Spher Bearing MPI (HEC)	2	2
	AN316-4R	Check Nut -	2	2
- 15	140-33540	Bell-Crank Assy - Main Wheel Door Cylinder Pivot MPI	1	1
	4B16CF5-16	Bushing - Sintered Oil Impregnated (NAA)	2	2
- 16	AN5-21A	Bolt - MPI	1	1
	AN960-516	Washer -	3	3
	AN365-524	Nut -	1	1
- 17	AN23-15A	Bolt - MPI	1	1
	AN364-1032	Nut -	1	1
-17A	AN23-14A	Bolt -	1	1
	NAS679C3	Nut -	1	1
- 18	151-33572-21	Rod Assy - M/LDG/GR Wheel Door Forward Hook Actuating	1	1
	151-33572-11	Rod Assy - M/LDG/GR Wheel Door Forward Hook Actuating	1	1
- 19	151-33575-3	Rod End - M/LDG/GR Wheel Door Hook Actuating MPI	1	1

Figure and Index Number	Group Landing Gear Major Assembly Main Landing Gear Wheel Door Mechanism Part	1 2 3 4 5 6 7 Nomenclature	Units per Assy	Usage on Code
97-19	MD36-14	Rod End - Unibal Spherical Bearing (HEC)	1	
	AN936A616	Washer	2	
	AN316-6R	Check Nut	2	
-20	AN23-13	Bolt - (As per EO 05-5E-6A/15)	1	
	AN960-10	Washer - (As per EO 05-5E-6A/15)	1	
	140-33553-5	Spacer - M/LDG/GR Wheel Door Hook Acte Rod	1	001-200
	140-33553-7	Spacer - M/LDG/GR Wheel Door Hook Acte Rod	1	201-
	AN310-3	Nut - (As per EO 05-5E-6A/15)	1	
	AN380-2-2	Cotter Pin - (As per EO 05-5E-6A/15)	1	
-21	AN23-15	Bolt - (As per EO 05-5E-6A/15)	1	
	AN310-3	Nut - (As per EO 05-5E-6A/15)	1	
	AN380-2-2	Cotter Pin - (As per EO 05-5E-6A/15)	1	
	151-33571	Rod Assembly - M/LDG/GR wheel door rear hook actuating	1	
-22	151-33571-7	Rod Assembly - M/LDG/GR wheel door rear hook actuating	1	
-23	MD36-14	Rod End - Unibal spherical bearing (HEC)	1	
-24	151-33575-4	Rod End - M/LDG/GR wheel door hook actuating MPI	1	
	AN936A616	Washer	2	
	AN316-6R	Check Nut	2	
-25	AN23-15	Bolt - (As per EO 05-5E-6A/15)	1	
	AN310-3	Nut - (As per EO 05-5E-6A/15)	1	
	AN380-2-2	Cotter Pin - (As per EO 05-5E-6A/15)	1	
-26	140-33553-5	Spacer - M/LDG/GR wheel door hook acte rod	1	001-200
-27	140-33553-7	Spacer - M/LDG/GR wheel door hook acte rod	1	201-
	AN960-10	Washer	2	
	AN310-3	Nut - (As per EO 05-5E-6A/15)	1	
	AN380-2-2	Cotter Pin - (As per EO 05-5E-6A/15)	1	
	170-33550	Bungee Assembly - M/LDG/GR wheel door forward lock	1	
-28	170-33551	Housing - M/LDG/GR wheel door forward lock bungee	1	
-29	170-33552	Shaft - M/LDG/GR wheel door forward lock bungee MPI	1	
-30	170-33550-3	Spring - M/LDG/GR wheel door forward lock bungee	1	
-31	170-33553	Plug - M/LDG/GR wheel door forward lock bungee	1	
-32	AN481-4P	Clevis	1	
	AN392-27	Pin	2	
	AN960D4L	Washer	2	
	AN380-2-1	Cotter Pin	2	
-33	M34-14	Rod End - Unibal spherical bearing (HEC)	1	
	AN316-4R	Check Nut	1	
-34	AN43-5	Bolt	1	
	AN960-616L	Washer	1	

Figure and Index Number	Group Landing Gear Major Assembly Main Landing Gear Wheel Door Mechanism (Cont'd) Part	1 2 3 4 5 6 7 Nomenclature	Units per Assy	Usage on Code
97-	4B16CF4-4	Bearing - Sintered oil impregnated (NAA)	2	
	AN960-416	Washer	1	
	AN320-4	Nut	1	
	AN380-2-2	Cotter Pin	1	
-35	AN3-6A	Bolt - MPI	1	
	AN960-10	Washer	1	
	AN365-1032	Nut	1	
-36	AN23-15	Bolt - (As per EO 05-5E-6A/15)	1	
	AN310-3	Nut - (As per EO 05-5E-6A/15)	1	
	AN380-2-2	Cotter Pin	1	
-37	AN4-20A	Bolt - MPI	1	
-38	AN4-15A	Bolt - MPI	1	
-39	NAS72-4-102	Bushing	1	
	AN960-416L	Washer	8	
	AN960-416	Washer	2	
	AN365-428	Nut	2	
-40	151-54243-1	Actuator Assembly - M/LDG/GR door open ind sw LH (see Section 10)	REF	
-41	151-33570-1	Hook Assembly - Main LDG/GR wheel door fwd LH (see Section 3)	REF	
-42	140-33545-1	Hook Assembly - Main wheel door rear LH (see Section 3)	REF	
-43	140-33535	Housing Assembly - Main wheel door lock torque shaft fwd bearing (see Section 3)	REF	
-44	140-33536	Housing Assembly - Main wheel door lock torque shaft rear bearing (see Section 3)	REF	
-45	151-58641-7	Cylinder Assembly - Hyd main gear fairing door complete (see Section 11)	REF	
-47	151-58641-7	Cylinder Assembly - Hyd main gear fairing door complete (see Section 11)	REF	

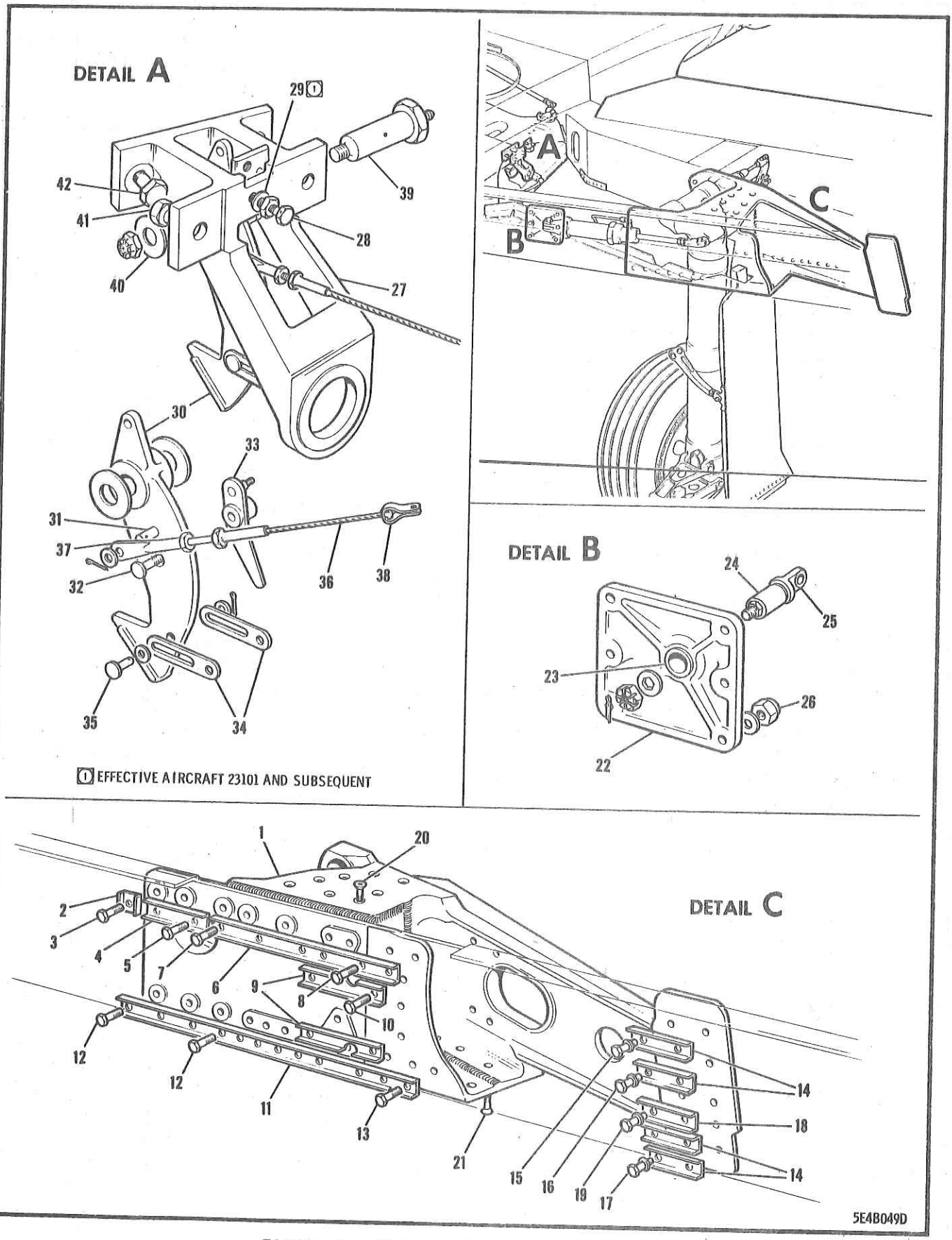

FIGURE 98 MAIN LANDING GEAR FITTINGS

FIGURE AND INDEX NUMBER	GROUP LANDING GEAR MAJOR ASSEMBLY MAIN LANDING GEAR FITTINGS PART NUMBER	1234567 NOMENCLATURE	CODE	UNITS PER ASSY
98 -	140-33014-21	FITTING INSTL - MAIN LANDING GEAR PORT (SEE SECTION 1)	001-100	NP
	140-33014-801	FITTING INSTL - MAIN LANDING GEAR PORT	101-	NP
	140-33014-22	FITTING INSTL - MAIN LANDING GEAR STBD (SEE SECTION 1)	001-100	NP
	140-33014-802	FITTING INSTL - MAIN LANDING GEAR STBD	101-	NP
- 1	151-33120-1	•FITTING ASSY - MAIN LANDING GEAR TRUNNION SUPPORT (PORT) (SEE FIG. 99)		REF
	151-33120-2	•FITTING ASSY - MAIN LANDING GEAR TRUNNION SUPPORT (STARBOARD) (SEE FIG. 99)		REF
- 2	151-33118	•RETAINER - MAIN LANDING GEAR TRUNNION SUPPORT INBOARD BOLT (UPPER)		1
- 3	140-33129-13	•BOLT - MAIN LANDING GEAR TRUNNION MPI		1
	EB-070	•NUT - DOUBLE HEX HIGH TENSILE (ESN)		1
- 4	151-33117	•RETAINER - MAIN LANDING GEAR TRUNNION SUPPORT UPPER CENTRE BOLT		1
- 5	AN6-14A	•BOLT - MPI		2
	AN960-616	•WASHER -		2
	AN365-524	•NUT - MPI		2
- 6	151-33119	•RETAINER - MAIN LANDING GEAR TRUNNION SUPPORT UPPER BOLT		1
- 7	140-33129-13	•BOLT - MAIN LANDING GEAR TRUNNION MPI		1
	EB-070	•NUT - DOUBLE HEX HIGH TENSILE (ESN)		1
- 8	AN7-15A	•BOLT - MPI		5
	AN365-720	•NUT - MPI		5
- 9	151-33116-1	•RETAINER - MAIN LANDING GEAR TRUNNION SUPPORT CENTRE SECTION BOLT (LOWER)		1
	151-33116-2	•RETAINER - MAIN LANDING GEAR TRUNNION SUPPORT CENTRE SECTION BOLT (LOWER)		1
-10	AN6-11A	•BOLT - MPI		4
	AN365-624	•NUT - MPI		4
-11	151-33113	•RETAINER - MAIN LANDING GEAR TRUNNION SUPPORT LOWER BOLT		1
-12	140-33129-9	•BOLT - MAIN LANDING GEAR TRUNNION MPI		2
	EB-070	•NUT - DOUBLE HEX HIGH TENSILE (ESN)		2
-13	AN7-14A	•BOLT - MPI		10
	AN365-720	•NUT - MPI		10
-14	151-33114	•RETAINER - MAIN LANDING GEAR TRUNNION SUPPORT TAIL SECTION BOLT		4
-15	140-33129-7	•BOLT - MAIN LANDING GEAR TRUNNION MPI	001-100	2
	140-33129-9	•BOLT - MAIN LANDING GEAR TRUNNION MPI	101-	2
-16	140-33129-3	•BOLT - MAIN LANDING GEAR TRUNNION MPI		4
-17	140-33129-5	•BOLT - MAIN LANDING GEAR TRUNNION MPI	001-100	2
	140-33129-7	•BOLT - MAIN LANDING GEAR TRUNNION MPI	101-	2
	AN960-716	•WASHER -		8
	EB-070	•NUT - DOUBLE HEX HIGH TENSILE (ESN)		8
-18	151-33115	•RETAINER - MAIN LANDING GEAR TRUNNION SUPPORT TAIL SECTION CENTRE BOLT		1
-19	165-33510	•BOLT - MAIN LANDING GEAR TRUNNION SUPPORT FITTING ATTACHING HIGH STRENGTH MPI		2
	AN365-624	•NUT - MPI		2
-20	NAS337A13	•BOLT -		8
	AN960-716	•WASHER -		16
	AN365-720	•NUT - MPI		8
-21	NAS338A14	•BOLT -		7
	AN960-816	•WASHER -		14
	AN365-820	•NUT - MPI		7
	140-33502	•FITTING ASSY - MAIN LANDING GEAR RETRACTING CYLINDER		1
-22	140-33503	••FITTING ASSY - MAIN LANDING GEAR RETRACTING CYLINDER		1

FIGURE AND INDEX NUMBER	GROUP	LANDING GEAR	CODE	UNITS PER ASSY
	MAJOR ASSEMBLY	MAIN LANDING GEAR FITTINGS		
	PART NUMBER	1234567 NOMENCLATURE		
98 -23	NAS77-11-50	•••BUSHING -		2
	NAS2-101	•••FITTING -		2
	140-33504	••PIN ASSY - MAIN LANDING GEAR RETRACTING CYLINDER MPI		1
-24	140-33504	•••PIN - MAIN LANDING GEAR RETRACTING CYLINDER MPI		1
-25	140-33504	•••BUSHING - MAIN LANDING GEAR RETRACTING CYL MPI (MAKE FROM NAS 76A-7-020)		1
	140-33515	••WASHER - MAIN LANDING GEAR RETRACTING CYLINDER PIVOT MPI		1
	AN320-8	••NUT -		1
	AN380-3-3	••COTTER-PIN -		1
	AN960-416	•WASHER -		6
-26	AN365-428	•NUT - MPI		6
	151-33511-1	•SUPPORT ASSY - MAIN LANDING GEAR STRUT UPLOCK (PORT)	001-100	1
	151-33511-11	•SUPPORT ASSY - MAIN LANDING GEAR STRUT UPLOCK (PORT)	101-370	1
	151-33511-111	•SUPPORT ASSY - MAIN LANDING GEAR STRUT UPLOCK (PORT)	371-410	1
	151-33511-113	•SUPPORT ASSY - MAIN LANDING GEAR STRUT UPLOCK (PORT)	411-	1
	151-33511-2	•SUPPORT ASSY - MAIN LANDING GEAR STRUT UPLOCK (STARBOARD)	001-100	1
	151-33511-12	•SUPPORT ASSY - MAIN LANDING GEAR STRUT UPLOCK (STARBOARD)	101-370	1
	151-33511-112	•SUPPORT ASSY - MAIN LANDING GEAR STRUT UPLOCK (STARBOARD)	371-410	1
	151-33511-114	•SUPPORT ASSY - MAIN LANDING GEAR STRUT UPLOCK (STARBOARD)	411-	1
-27	151-33512-1	••FITTING - MAIN LANDING GEAR UPLOCK SUPPORT (PORT)		1
	151-33512-2	••FITTING - MAIN LANDING GEAR UPLOCK SUPPORT (STARBOARD)		1
-28	NAS428-3-7	••SCREW -	001-100	1
	NAS428H3-7	••SCREW -	101-	1
-29	AN960D10	••WASHER -	101-	1
	AN345-10	••NUT -	001-100	2
	AN345-10	••NUT -	101-	1
	165-33512-1	••NUT - MAIN LANDING GEAR STRUT UPLOCK (PORT)	101-	1
	165-33512-2	••NUT - MAIN LANDING GEAR STRUT UPLOCK (STARBOARD)	101-	1
	165-33540-5	••LATCH ASSY - MAIN LANDING GEAR UPLOCK MPI (PORT)		1
	165-33540-6	••LATCH ASSY - MAIN LANDING GEAR UPLOCK MPI (STARBOARD)		1
-30	165-33540-3	•••LATCH - MAIN LANDING GEAR UPLOCK MPI (PORT)		1
	165-33540-4	•••LATCH - MAIN LANDING GEAR UPLOCK MPI (STARBOARD)		1
-31	AN393-13	•••PIN -		1
-32	165-33541	•••PIN - MAIN LANDING GEAR UPLOCK LATCH ATT		1
-33	151-54380-1	••CAM ASSY - MAIN LANDING GEAR UPLOCK SEQUENCE SWITCH (PORT)		1
	151-54380-2	••CAM ASSY - MAIN LANDING GEAR UPLOCK SEQUENCE SWITCH (STARBOARD)		1
	AN320-3	••NUT -		1
	AN960-10L	••WASHER -		1
	AN380C2-2	••COTTER-PIN -		1

FIGURE AND INDEX NUMBER	GROUP LANDING GEAR MAJOR ASSEMBLY MAIN LANDING GEAR FITTINGS PART NUMBER	1234567 NOMENCLATURE	CODE	UNITS PER ASSY
98 -34	151-33514	••LINK - MAIN LANDING GEAR STRUT UPLOCK LATCH ACTUATOR		2
-35	151-33516	••PIN - MAIN LANDING GEAR STRUT UPLOCK LATCH ACTUATOR LINK ATTACHMENT		1
	AN960D8	••WASHER -		2
	AN380-2-1	••COTTER-PIN -		1
	140-33633	••CABLE ASSY - LDG/GR EMY RELEASE TO MAIN LANDING GEAR UPLOCK	001-370	1
	140-33633-851	••CABLE ASSY - LDG/GR EMY RELEASE TO MAIN LANDING GEAR UPLOCK	371-410	1
	140-33633-857	••CABLE ASSY - LDG/GR EMY RELEASE TO MAIN LANDING GEAR UPLOCK	411-	1
-36	140-33633-3	•••CABLE - LDG/GR EMY REL TO MAIN LANDING GEAR UPLOCK	001-370	1
	140-33633-855	•••CABLE - LDG/GR EMY REL TO MAIN LANDING GEAR UPLOCK	371-	1
	AN666-2R	•••TERMINAL -		1
-37	AN665-10R	•••TERMINAL -	001-370	1
	140-33633-853	•••TERMINAL - M/LDG/GR EMERGENCY RELEASE	371-410	1
	140-33633-859	•••TERMINAL - M/LDG/GR EMERGENCY RELEASE	411-	1
	AN315-640	•••NUT -		1
	RA-2487-2	•••TERMINAL - PLAIN BALL SWAGED (ACC)		1
-38	RA-2482-2	•••TERMINAL - BALL-WITH-STRAP (ACC)		1
	AN960-10	••WASHER -		1
	AN960-10L	••WASHER -	371-	1
	AN380C2-2	••COTTER-PIN -		1
	140-33510	••BOLT ASSY - MAIN LANDING GEAR UPLOCK MPI		1
-39	140-33510-3	•••BOLT - MAIN LANDING GEAR UPLOCK MPI		1
	NAS2-101	•••FITTING -		1
	AN960-816	••WASHER -		3
	2W1-33-24-20	••WASHER - PLAIN (NAA)		AR
-40	2W1-16-24-64	••WASHER - PLAIN (NAA)		1
	AN310-4	••NUT -		1
	AN380C2-4	••COTTER-PIN -		1
-41	AN5-7A	•BOLT - MPI		1
	AN960-516	•WASHER -		1
	AN365-524	•NUT - MPI		1
-42	AN5-6A	•BOLT - MPI		3
	AN960-516L	•WASHER -		3
	AN365-524	•NUT - MPI		3

-000-

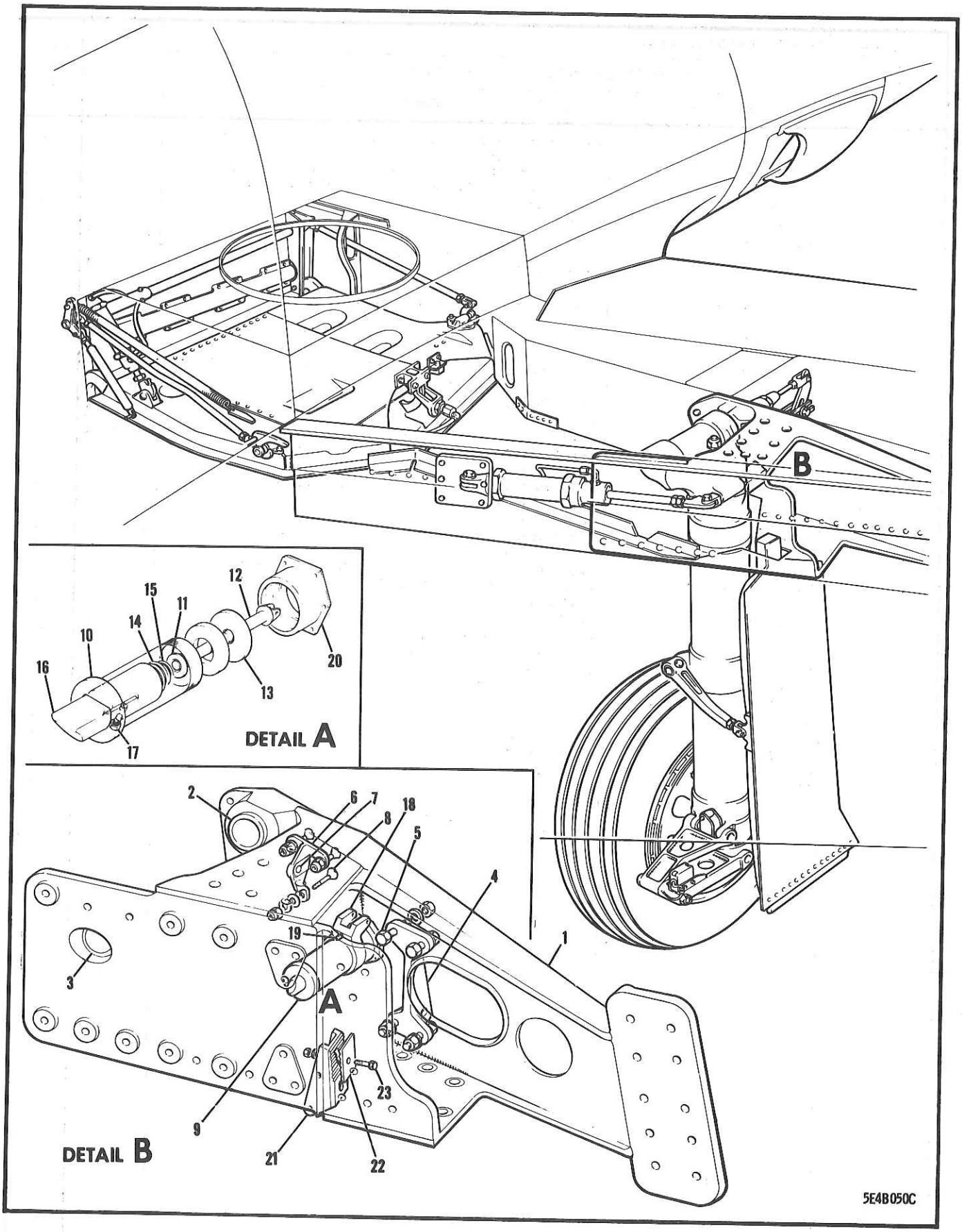

FIGURE 99 MAIN LANDING GEAR TRUNNION FITTING

FIGURE AND INDEX NUMBER	GROUP LANDING GEAR MAJOR ASSEMBLY MAIN LANDING GEAR TRUNNION FITTING PART NUMBER	1234567 NOMENCLATURE	CODE	UNITS PER ASSY
99 -	151-33120-1	FITTING ASSY - MAIN LANDING GEAR TRUNNION SUPPORT (PORT) (SEE FIG. 98)	001-100	1
	151-33120-801	FITTING ASSY - MAIN LANDING GEAR TRUNNION SUPPORT (PORT)	101-	1
	151-33120-2	FITTING ASSY - MAIN LANDING GEAR TRUNNION SUPPORT (STARBOARD) (SEE FIG. 98)	001-100	1
	151-33120-802	FITTING ASSY - MAIN LANDING GEAR TRUNNION SUPPORT (STARBOARD)	101-	1
- 1	151-33121-1	.FITTING ASSY - MAIN LANDING GEAR TRUNNION SUPPORT MPI (PORT)	001-100	1
	151-33121-801	.FITTING ASSY - MAIN LANDING GEAR TRUNNION SUPPORT MPI (PORT)	101-	1
	151-33121-2	.FITTING ASSY - MAIN LANDING GEAR TRUNNION SUPPORT MPI (STARBOARD)	001-100	1
	151-33121-802	.FITTING ASSY - MAIN LANDING GEAR TRUNNION SUPPORT MPI (STARBOARD)	101-	1
- 2	140-33124-3	..BUSHING - MAIN LDG/GR TRUNNION SUP. MPI		1
- 3	140-33124-4	..BUSHING - MAIN LDG/GR TRUNNION SUP. MPI		1
	NAS2-101	..FITTING -		1
- 4	151-18045-1	.FITTING - FLAP HINGE STA 33 RIB TO LANDING GEAR TRUNNION ATTACHING (PORT)		1
	151-18045-2	.FITTING - FLAP HINGE STA 33 RIB TO LANDING GEAR TRUNNION ATTACHING (STARBOARD)		1
- 5	AN4-10A	.BOLT - (UPPER) MPI		2
	AN960D416	.WASHER -		2
	AN365-428	.NUT - MPI		2
	AN5-10A	.BOLT - MPI (LOWER)		2
	AN960D516	.WASHER -		2
	AN365-524	.NUT - MPI		2
- 6	151-33130	.BRACKET ASSY - MAIN LANDING GEAR DOWNLOCK PIN ACTUATOR SUPPORT		1
- 7	4B16RP6-10	..BEARING - SINTERED OIL IMPG (NAA)		1
- 8	NAS204-14	.SCREW -		1
	NAS204-13	.SCREW -		2
	AN960-8	.WASHER -		6
	AN365-832	.NUT -		3
- 9	140-33141-1	.DOWNLOCK ASSY - MAIN LANDING GEAR (PORT)	001-100	1
	140-33141-801	.DOWNLOCK ASSY - MAIN LANDING GEAR (PORT)	101-	1
	140-33141-2	.DOWNLOCK ASSY - MAIN LANDING GEAR (STBD)	001-100	1
	140-33141-802	.DOWNLOCK ASSY - MAIN LANDING GEAR (STBD)	101-	1
-10	140-33143-1	..HOUSING ASSY - MAIN LDG/GR DWNLK PORT MPI	001-100	1
	140-33143-801	..HOUSING ASSY - MAIN LDG/GR DWNLK PORT MPI	101-	1
	140-33143-2	..HOUSING ASSY - MAIN LDG/GR DWNLK STBD MPI	001-100	1
	140-33143-802	..HOUSING ASSY - MAIN LDG/GR DWNLK STBD MPI	101-	1
-11	151-33132	...BUSHING - MAIN GEAR DOWNLOCK HOUSING		1
-12	140-33145	..SHAFT - MAIN LANDING GEAR DOWNLOCK MPI		1
-13	2W2S-32-56-62	..WASHER - THRUST (NAA)		1
	140-33146	..WASHER - MAIN LANDING GEAR DOWNLOCK SHOCK		1
-14	140-33154	..SPRING - MAIN LDG GEAR DOWNLOCK OUTER MPI		1
-15	140-33155	..SPRING - MAIN LDG GEAR DOWNLOCK INNER MPI		1
-16	140-33142-1	..PIN - MAIN GEAR TRUNNION DWNLK MPI (PORT)		1
	140-33142-2	..PIN - MAIN GEAR TRUNNION DWNLK MPI (STBD)		1
-17	140-33153	.SCREW - MAIN LDG GEAR DOWNLOCK GUIDE MPI	001-746	1
	140-33153-800	.SCREW - MAIN LDG GEAR DOWNLOCK GUIDE MPI	747-	1
	140-33149	.SLEEVE ASSY - MAIN LANDING GEAR DOWNLOCK		1
-18	140-33149-3	..SLEEVE - MAIN LANDING GEAR DOWNLOCK		1
-19	140-33149-4	..PIN - MAIN LANDING GEAR DOWNLOCK SLEEVE		1
-20	140-33150	.NUT - MAIN LANDING GEAR DOWNLOCK		1
-21	151-33354-1	.BRACKET - MAIN LDG/GR DOOR HNG MPI (PORT)		1
	151-33354-2	.BRACKET - MAIN LDG/GR DOOR HNG MPI (STBD)		1

FIGURE AND INDEX NUMBER	GROUP LANDING GEAR MAJOR ASSEMBLY MAIN LANDING GEAR TRUNNION FITTING PART NUMBER	1234567 NOMENCLATURE	CODE	UNITS PER ASSY
99 -22	151-33352	•SHIM - MAIN LDG GEAR STRUT DOOR HINGE MPI		1
-23	AN4-7A	•BOLT - MPI		1
	AN4-10A	•BOLT - MPI		1
	AN960-416	•WASHER -		2
	AN365-428	•NUT - MPI		2
		-000-		

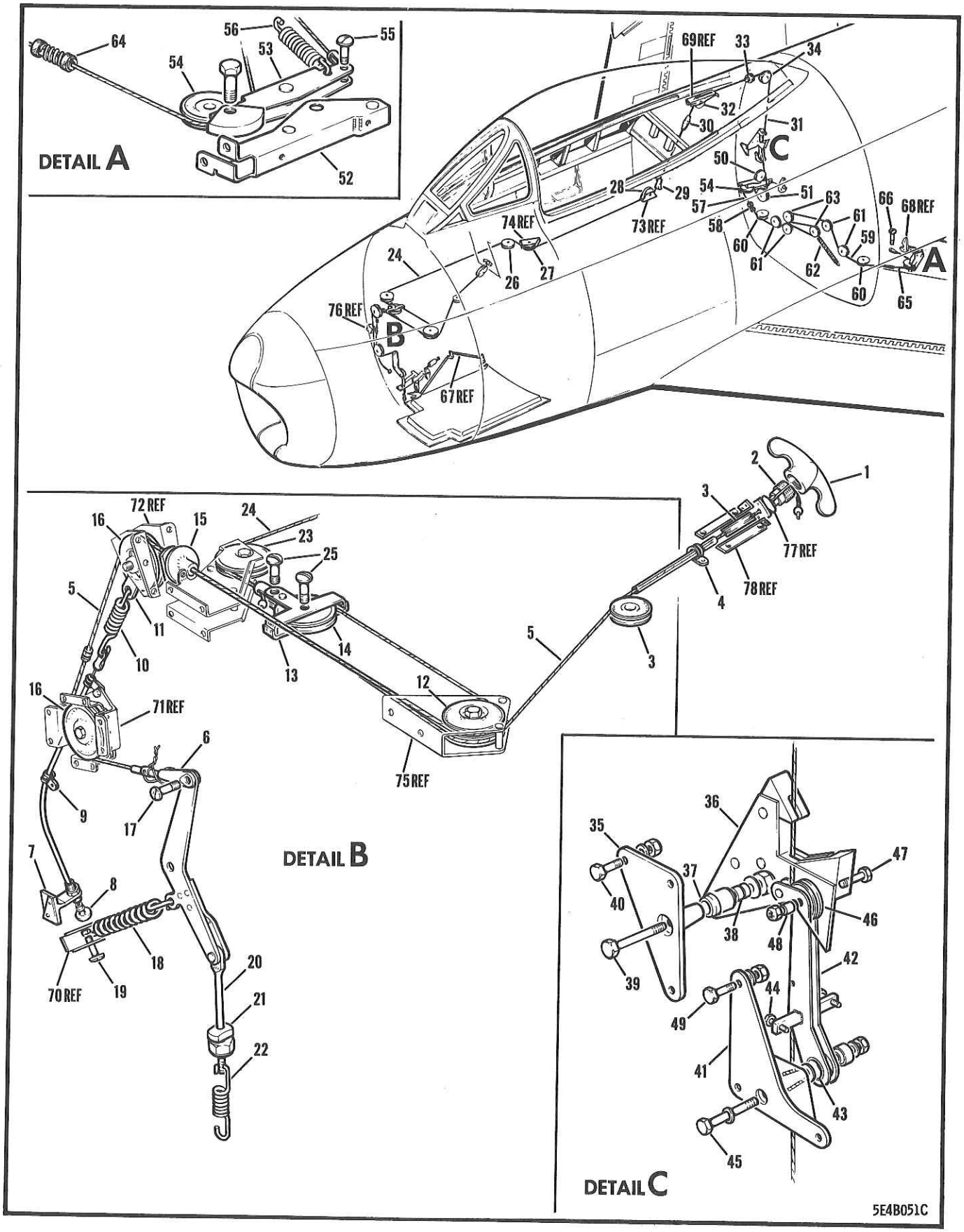

FIGURE 100 LANDING GEAR EMERGENCY RELEASE

FIGURE AND INDEX NUMBER	GROUP LANDING GEAR MAJOR ASSEMBLY LANDING GEAR EMERGENCY RELEASE PART NUMBER	1234567 NOMENCLATURE	CODE	UNITS PER ASSY
				NP
100 -	151-33601-820	EMERGENCY CONTROL INSTL - LANDING GEAR (SEE FIG. 1)	001-200	1
		•HANDLE ASSY - M/LDG/GR EMY DOWN CONTROL	001-200	1
- 1	120-33548	••SCREW -		
	AN565A4-5	OR	001-200	
		••SET-SCREW - FLAT POINT HEADLESS		
	COMMERCIAL	NO. 4-40 X 5/16	201-	1
		•HANDLE - (NAA) (EMERGENCY LANDING GEAR)	201-	1
	5H2-11	•SCREW -		1
	AN565A4-5	•GUIDE - CABLE (MAIN GEAR DOWN CONTROL)		2
- 2	151-33619	•PULLEY -		2
- 3	AN210-1A	•BOLT -		1
	AN3-7A	•WASHER -		1
	AN960-10L	•NUT -		1
	AN365-1032	•CLAMP -		1
- 4	AN742D9C	•SCREW -		1
	AN515-8-8	•WASHER -		1
	AN960-8	•NUT -		1
	AN365-832	•CABLE ASSY - LDG/GR EMY RELEASE FORWARD		
- 5	151-33635-11	•SPARE ASSY FOR 151-33635-11		1
	151-33635-13	••SCREW - RUDDER BALANCE CABLE PEDAL LKG		
	23-52453	••SPARE PART FOR 23-52453		1
	1L1-3H	••LOCK - CABLE (NAA)		
	1L1-2	••SPARE PART FOR 1L1-2		1
	1L1-2H	••TERMINAL -		1
- 6	AN665-21L	•SUPPORT ASSY - EMERGENCY LDG/GR SELECTOR VALVE RESET CABLE	001-100	1
- 7	172-33615	•SUPPORT ASSY - EMERGENCY LDG/GR SELECTOR VALVE RESET CABLE	101-	1
	172-33615-11	•SCREW -	001-100	2
		•SCREW -	101-	2
	AN515-8R8	•CONTROL ASSY - (SPC) (PUSH-PULL) (SPEC 172-933004)		1
	AN515-8R14	•NUT -		1
- 8	3A1064	•WASHER -		1
		•WASHER -		1
	AN315-3	•CLAMP -		1
	AN935-10L	•CLAMP -		2
	AN960-10L	•BOLT -		2
- 9	AN742-4C	•WASHER -		2
	AN742-3	•NUT -		1
	AN3-3A	•SPRING - TENSION (EMERGENCY RELEASE FWD)		1
	AN960D10L	•BOLT -		1
	AN365-1032	•LINK - EMERGENCY LDG/GR SELECTOR VALVE RESET CABLE SPRING		1
-10	172-33616	•PIN -		1
	AN73-3	•WASHER -		1
-11	172-33612	•COTTER-PIN -		2
		•PULLEY -		1
	AN392-15	•BOLT -		1
	AN960D4L	•WASHER -		1
	AN380-2-1	•NUT -		1
-12	AN210-2A	•TERMINAL ASSY - M/LDG/GR EMERGENCY LOCK RELEASE CABLE		1
	AN3-12A	•PULLEY -	001-100	1
	AN960-10	•SCREW -	101-	1
	AN365-1032	•SCREW -		1
-13	130-33508-950	•WASHER -		1
		•NUT -		1
-14	AN210-2A	•GROMMET - LANDING GEAR EMERGENCY RELEASE PRESSURE SEAL FUS STA 54		1
	AN520-10R8			
	AN520-10R12			
	AN960-10			
	AN365-1032			
-15	151-33633			

FIGURE AND INDEX NUMBER	GROUP LANDING GEAR MAJOR ASSEMBLY LANDING GEAR EMERGENCY RELEASE PART NUMBER	1234567 NOMENCLATURE	CODE	UNITS PER ASSY
100 -16	AN210-2A	•PULLEY -		2
	AN3-6A	•BOLT -		2
	AN365-1032	•NUT -		1
-17	AN23-9	•BOLT -		1
	AN320-3	•NUT -		1
	AN380-2-2	•COTTER-PIN -		1
-18	151-33646	•SPRING - LANDING GEAR EMERGENCY RELEASE NOSE WHEEL DOOR LOCK ACTUATING ARM		1
-19	AN24-25H	•BOLT -		1
	AN364-428	•NUT -		1
-20	151-33637	•ROD - LANDING GEAR EMY RELEASE NOSE WHEEL DOOR LOCK REAR		1
	AN393-19	•PIN -		1
	AN380-2-1	•COTTER-PIN -		1
-21	140-33652	•WASHER - LANDING GEAR EMERGENCY REL NOSE WHEEL DOOR LINK		1
	AN365-1032	•NUT -		1
-22	120-63210	•SPRING - REL HOOK ACTE (NOSE WHEEL DOOR)		1
-23	AN210-2A	•PULLEY -		1
	4S3-10-4	•SPACER - BOLT (NAA)		1
	AN3-10A	•BOLT -		1
	AN960-10	•WASHER -		1
	AN365-1032	•NUT -		1
-24	151-33638-815	•CABLE ASSY - LDG/GR EMY REL MAIN GEAR FWD		1
-25	AN23-12	•BOLT -		1
	AN960-10L	•WASHER -		1
	AN320-3	•NUT -		1
	AN380-2-2	•COTTER-PIN -		2
-26	AN210-1B	•PULLEY -		1
	AN3-11A	•BOLT -		1
	NAS43DD3-20	•SPACER -		1
	AN960D10	•WASHER -		1
	AN365-1032	•NUT -		1
-27	AN210-1B	•PULLEY -		1
	AN3-7A	•BOLT -		1
	AN960C10L	•WASHER -		1
	AN960D10	•WASHER -		1
	AN365-1032	•NUT -		2
-28	AN210-1B	•PULLEY -		1
	AN3-6A	•BOLT -		1
	AN365-1032	•NUT -		1
-29	140-33636	•SEAL - LDG/GR EMY REL FUS STA 118 PRESSURE		1
-30	AN155-16S	•BARREL -		1
	13A-96084	•BARREL - LANDING GEAR EMERGENCY CONTROL (MAKE FROM AN155-16L)	001-410	1
-31	151-33639-813	•CABLE ASSY - LDG/GR EMY REL MAIN GEAR REAR	411-	1
	151-33639-815	•SPARE ASSY FOR 151-33639-813		1
	23-52453	••SCREW - RUDDER BALANCE CABLE PEDAL LKG		1
	1L1-3H	••SPARE PART FOR 23-52453		1
	1L1-2	••LOCK - CABLE (NAA)		1
	1L1-2H	••SPARE PART FOR 1L1-2		1
-32	AN210-2A	•PULLEY -		1
	AN3-6A	•BOLT -		1
	AN365-1032	•NUT -		1
-33	151-33632	•GROMMET - LDG/GR EMERGENCY RELEASE UPPER PULLEY VAPOUR SEAL FUS STA 178		1
-34	AN210-2A	•PULLEY -		1
	AN3-7A	•BOLT -		1
	AN960-10L	•WASHER -		1
	AN365-1032	•NUT -		1

FIGURE AND INDEX NUMBER	GROUP LANDING GEAR MAJOR ASSEMBLY LANDING GEAR EMERGENCY RELEASE PART NUMBER	1234567 NOMENCLATURE	CODE	UNITS PER ASSY
100 -	151-33644	•FITTING ASSY - LDG/GR EMERGENCY RELEASE SEQUENCE VALVE LOCK-ARM SUPPORT		1
-35	151-33645	••SUPPORT ASSY - LDG/GR EMERGENCY RELEASE SEQUENCE VALVE LOCK-ARM		1
-36	151-33628	••LOCK-ARM ASSY - LDG/GR EMY REL SEQ VALVE		1
-37	NAS75-6-023	•••BUSHING -		1
-38	NAS73-3-012	••BUSHING -		1
	2W1-13-16-42	••WASHER - PLAIN (NAA)		1
-39	AN3-21A	••BOLT -		2
	2W1-13-16-42	••WASHER - PLAIN (NAA)		1
	AN365-1032	••NUT -		3
-40	AN3-5	•BOLT -		3
	AN365-1032	•NUT -		1
	151-33630-10	•FITTING ASSY - LDG/GR EMY RELEASE SEQUENCE VALVE ACTUATOR ARM SUPPORT	001-210	1
	151-33630-800	•FITTING ASSY - LDG/GR EMY RELEASE SEQUENCE VALVE ACTUATOR ARM SUPPORT	211-	1
-41	151-33631	••SUPPORT ASSY - LDG/GR EMY REL SEQ VALVE ACTUATING ARM		1
-42	191-33627	••ARM ASSY - M/LDG/GR EMERGENCY RELEASE SEQ VALVE ACTUATING		1
-43	AN200KS3L	•••BEARING -		1
-44	5B1-5DH	••BOLT - ADJUSTMENT (NAA)		2
	AN315-3	••NUT -		2
-45	AN3-22A	••BOLT -	001-210	1
	13-71006	••BOLT - LDG/GR EMY REL SEQ VALVE ACTE ARM SUP. FITTING ASSY	211-	1
	2W1-12-12-109	••WASHER - PLAIN (NAA)		2
	2W1-12-32-32	••WASHER - PLAIN (NAA)		2
	AN960D10L	••WASHER -		2
	AN365-1032	••NUT -		1
-46	AN210-1A	•PULLEY -		1
-47	AN3-10A	•BOLT -		1
-48	4S3-10-10	•SPACER - BOLT (NAA)		1
	AN365-1032	•NUT -		1
-49	AN3-6A	•BOLT -		3
	AN960-10	•WASHER -		3
	AN365-1032	•NUT -		3
-50	AN210-1A	•PULLEY -		1
	AN3-6A	•BOLT -		1
	AN960-10	•WASHER -		1
	AN365-1032	•NUT -		1
-51	AN210-2A	•PULLEY -		1
	AN3-6A	•BOLT -		1
-52	140-33625-2	•BRACKET ASSY - LDG/GR EMERGENCY RELEASE FLAP STA 6 (PORT SIDE) (FOR UPPER CODE SEE FIG. 101)	001-200	1
	140-33625-1	•BRACKET ASSY - LANDING GEAR EMY RELEASE FLAP STA 6 (STBD SIDE) (FOR UPPER CODE SEE FIG. 101)	001-200	1
	4S3-416-6	•SPACER - BOLT (NAA)	001-200	2
	AN4-7A	•BOLT -		2
	AN3-4A	•BOLT -		1
	AN365-1032	•NUT -		1
-53	151-33629	•ARM ASSY - M/LDG/GR EMY REL SYS UPLK ACTE (FOR UPPER CODE SEE FIG. 101)	001-200	2
	NAS72-3-009	•BUSHING -	001-200	2
	AN3-11A	•BOLT -	001-200	2
	AN960-10	•WASHER -	001-200	2
	AN365-1032	•NUT -	001-200	2

FIGURE AND INDEX NUMBER	GROUP LANDING GEAR MAJOR ASSEMBLY LANDING GEAR EMERGENCY RELEASE PART NUMBER	1234567 NOMENCLATURE	CODE	UNITS PER ASSY
100 -54	AN210-2A	•PULLEY -		2
	AN3-7A	•BOLT -	001-200	2
	AN960-10	•WASHER -	001-200	2
	AN365-1032	•NUT -	001-200	2
-55	AN23-12	•BOLT -	001-200	2
	AN320-3	•NUT -	001-200	2
	AN380-2-2	•COTTER-PIN -	001-200	2
-56	140-33634	•SPRING - LDG/GR EMY REL UPLOCK HOLD-BACK	001-200	2
-57	151-33640	•CABLE ASSY - LDG/GR EMERGENCY RELEASE RH (FOR UPPER CODE SEE FIG. 101)	001-200	1
-58	RA-2258-3	•TERMINAL - DOUBLE SHANK BALL-TYPE (ACC)		2
-59	151-33641	•CABLE ASSY - LANDING GEAR EMY RELEASE LH		1
-60	AN210-1A	•PULLEY -		2
	AN3-6A	•BOLT -		2
	AN365-1032	•NUT -		2
-61	AN210-1A	•PULLEY -		4
	AN3-6A	•BOLT -		4
-62	140-33635	•SPRING - M/LDG/GR EMY RELEASE SYSTEM HOLD-BACK PORT		1
	140-33630	•SPRING - M/LDG/GR EMY RELEASE SYSTEM HOLD-BACK STBD		1
-63	AN210-1A	•PULLEY -		2
	AN3-7A	•BOLT -	001-342	2
	AN3-11A	•BOLT -	343-	2
	140-33620	•GUARD - LDG/GR EMY REL TORQUE SHAFT CABLE		2
	4S3-10-6	•SPACER - BOLT (NAA)	001-342	2
	4S3-10-12	•SPACER - BOLT (NAA)	343-	2
	AN364-1032	•NUT -		2
-64	RA-2258-3	•TERMINAL - DOUBLE SHANK BALL-TYPE (ACC)		1
-65	151-33642	•CABLE ASSY - EMERGENCY RELEASE MAIN GR LH (FOR UPPER CODE SEE FIG. 101)	001-200	1
	AN665-21P	••TERMINAL -		
-66	AN23-9	•BOLT -	001-200	1
	AN320-3	•NUT -	001-200	1
	AN380-2-2	•COTTER-PIN -	001-200	1
-67	140-34554	ROD ASSY - NOSE WHEEL DOOR REAR LATCH OPR (SEE FIG. 90)	001-200	1
-68	165-33540-5	LATCH ASSY - MAIN GEAR UPLOCK LH (SEE FIG. 98)		REF
-69	151-33610	BRACKET ASSY - LDG/GR EMY REL PULLEY FUS STA 147 (SEE SECTION 3)		REF
-70	151-33620	CLIP - LDG/GR EMY REL NOSE WHEEL DOOR LOCK ACTUATING ARM HOLD-BACK SPRING (SEE SECTION 3)		REF
-71	151-33606	BRACKET ASSY - LDG/GR EMY REL NOSE WHEEL DOOR LOCK LWR PUL (STARBOARD SIDE) (SEE SECTION 3)		REF
-72	151-33605	BRACKET ASSY - LDG/GR EMY REL NOSE WHEEL DOOR LOCK UPPER PULLEY (STBD SIDE) (SEE SECTION 3)		REF
-73	170-33608	BRACKET ASSY - LDG/GR EMY REL FUS STA 114 PULLEY RH (SEE SECTION 3)		REF
-74	170-33609	BRACKET ASSY - LDG/GR EMY REL FUS STA 86 PULLEY RH (SEE SECTION 3)		REF
-75	151-33603	BRACKET ASSY - LDG/GR EMY REL FUS STA 53 CENTRE PULLEY (SEE SECTION 3)		REF
-76	172-58605-10	VALVE ASSY - HYDRAULIC EMY NOSE GR SELECTOR (COMPLETE) (SEE SECTION 11)		REF
-77	140-33614	RECEPTACLE - LANDING GEAR EMY REL HANDLE (SEE SECTION 3)		REF
-78	140-33602	BRACKET ASSY - LDG/GR EMY REL PEDESTAL PUL (SEE SECTION 3)		REF

-000-

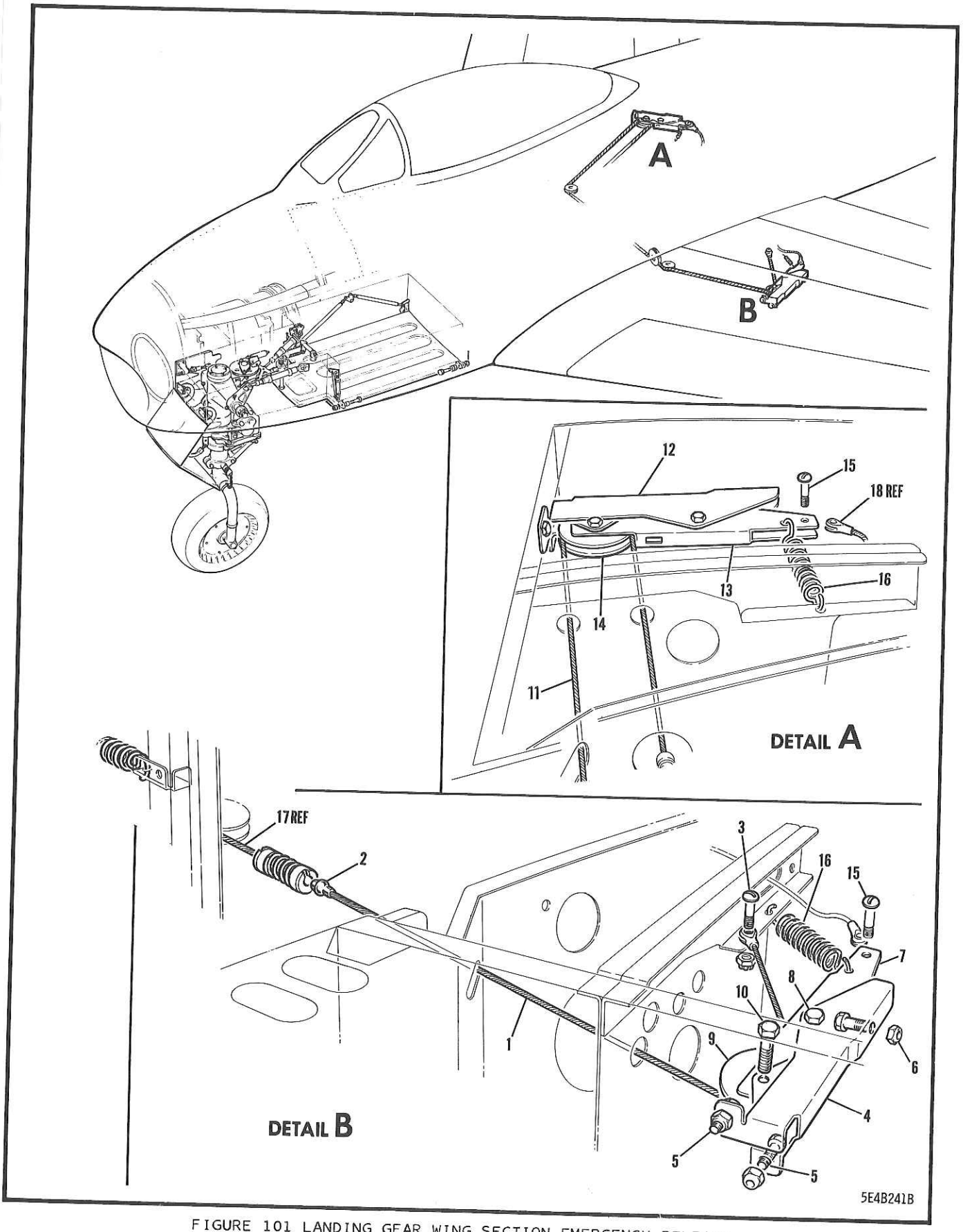

FIGURE 101 LANDING GEAR WING SECTION EMERGENCY RELEASE
(EFFECTIVE AIRCRAFT 23201 & SUBS)

FIGURE AND INDEX NUMBER	GROUP LANDING GEAR MAJOR ASSEMBLY LANDING GEAR WING SECTION EMERGENCY RELEASE PART NUMBER	1234567 NOMENCLATURE	CODE	UNITS PER ASSY
101 -	170-14002-807	WING ASSY - PORT OUTER PANEL INTERMEDIATE (SEE SECTION 1)		REF
	170-14002-808	WING ASSY - PORT OUTER PANEL INTERMEDIATE		REF
- 1	151-33642	•CABLE ASSY - M/LDG/GR EMERGENCY RELEASE LH	201-	1
- 2	AN663C3	••TERMINAL -	201-	1
	AN666-3RH	••TERMINAL -	201-	1
	AN665-21P	••TERMINAL -	201-	1
- 3	AN23-9	•BOLT -	201-	1
	AN320-3	•NUT -	201-	1
	AN380-2-2	•COTTER-PIN -	201-	1
- 4	140-33625-2	•BRACKET ASSY - LDG/GR EMERGENCY RELEASE FLAP STA 5 RH	201-	1
	4S4D5-18	••SPACER - RIVET (NAA)	201-	2
	4S3-416-3	•SPACER - (NAA)	201-	2
- 5	AN4-7A	•BOLT -	201-	2
	AN3-4A	•BOLT -	201-	1
- 6	AN365-1032	•NUT -	201-	1
- 7	151-33629	•ARM ASSY - M/LDG/GR EMERGENCY RELEASE SYSTEM UPLOCK ACTUATING	201-	1
	NAS72-3-009	•BUSHING -	201-	1
- 8	AN3-11A	•BOLT -	201-	1
	AN960-10	•WASHER -	201-	1
	AN365-1032	•NUT -	201-	1
- 9	AN210-2A	•PULLEY -	201-	1
-10	AN3-7A	•BOLT -	201-	1
	AN960-10	•WASHER -	201-	1
	AN365-1032	•NUT -	201-	1
-11	151-33640	•CABLE ASSY - LDG/GR EMERGENCY RELEASE RH	201-	1
	RA-2258-3	••TERMINAL - DOUBLE SHANK BALL-TYPE (ACC)	201-	2
	AN663C3	••TERMINAL -	201-	2
-12	140-33625-1	•BRACKET ASSY - LDG/GR EMERGENCY RELEASE FLAP STA 5 LH	201-	1
	4S4D5-18	••SPACER - RIVET (NAA)	201-	2
	4S3-416-6	•SPACER - BOLT (NAA)	201-	2
	AN4-7A	•BOLT -	201-	2
	AN3-4A	•BOLT -	201-	1
	AN365-1032	•NUT -	201-	1
-13	151-33629	•ARM ASSY - M/LDG/GR EMERGENCY RELEASE SYS UPLOCK ACTUATING	201-	1
	NAS72-3-009	•BUSHING -	201-	1
	AN3-11A	•BOLT -	201-	1
	AN960-10	•WASHER -	201-	1
	AN365-1032	•NUT -	201-	1
-14	AN210-2A	•PULLEY -	201-	1
	AN3-7A	•BOLT -	201-	1
	AN960-10	•WASHER -	201-	1
	AN365-1032	•NUT -	201-	1
-15	AN23-12	•BOLT -	201-	2
	AN320-3	•NUT -	201-	2
	AN380-2-2	•PIN -	201-	2
-16	140-33634	•SPRING - LDG/GR EMY REL UPLOCK HOLD-BACK	201-	2
-17	151-33641	CABLE ASSY - LDG/GR EMERGENCY RELEASE LH (SEE FIG. 100)		REF
-18	140-33633	CABLE ASSY - LDG/GR EMERGENCY RELEASE TO MAIN GEAR UPLOCK (SEE FIG. 98)		REF

-000-

SECTION 5

POWER PLANT

TABLE OF CONTENTS

FIGURE	TITLE	PAGE
102	ORENDA 10 ENGINE & ACCESSORIES (EFFECTIVE AIRCRAFT 23001 TO 23370 INCL)	510
103	ORENDA 14 ENGINE & ACCESSORIES (EFFECTIVE AIRCRAFT 23371 & SUBS)	514
104	ORENDA 10 ENGINE & ACCESSORY LINES (EFFECTIVE AIRCRAFT 23001 TO 23370 INCL)	516
105	ORENDA 14 ENGINE & ACCESSORY LINES (EFFECTIVE AIRCRAFT 23371 & SUBS)	520
106	ORENDA 10 POWER PLANT (EFFECTIVE AIRCRAFT 23001 TO 23370 INCL)	524
107	ORENDA 14 POWER PLANT (EFFECTIVE AIRCRAFT 23371 & SUBS)	526
108	ENGINE NOSE FAIRING	528
109	ENGINE FIREWALL	532
110	ORENDA 10 ENGINE EXHAUST TAIL-PIPE (EFFECTIVE AIRCRAFT 23001 TO 23370 INCL)	534
111	ORENDA 14 ENGINE EXHAUST TAIL-PIPE (EFFECTIVE AIRCRAFT 23371 & SUBS)	538
112	ENGINE & THROTTLE CONTROLS	542
113	ENGINE POWER CONTROL QUADRANT (EFFECTIVE AIRCRAFT 23001 TO 23100 INCL)	546
114	ENGINE POWER CONTROL QUADRANT (EFFECTIVE AIRCRAFT 23101 & SUBS)	548
115	ENGINE POWER CONTROL QUADRANT THROTTLE LEVER (EFFECTIVE AIRCRAFT 23001 TO 23100 INCL)	552
116	ENGINE POWER CONTROL QUADRANT THROTTLE LEVER (EFFECTIVE AIRCRAFT 23101 & SUBS)	556
117	POWER & UTILITY CONTROL PUMPS	560

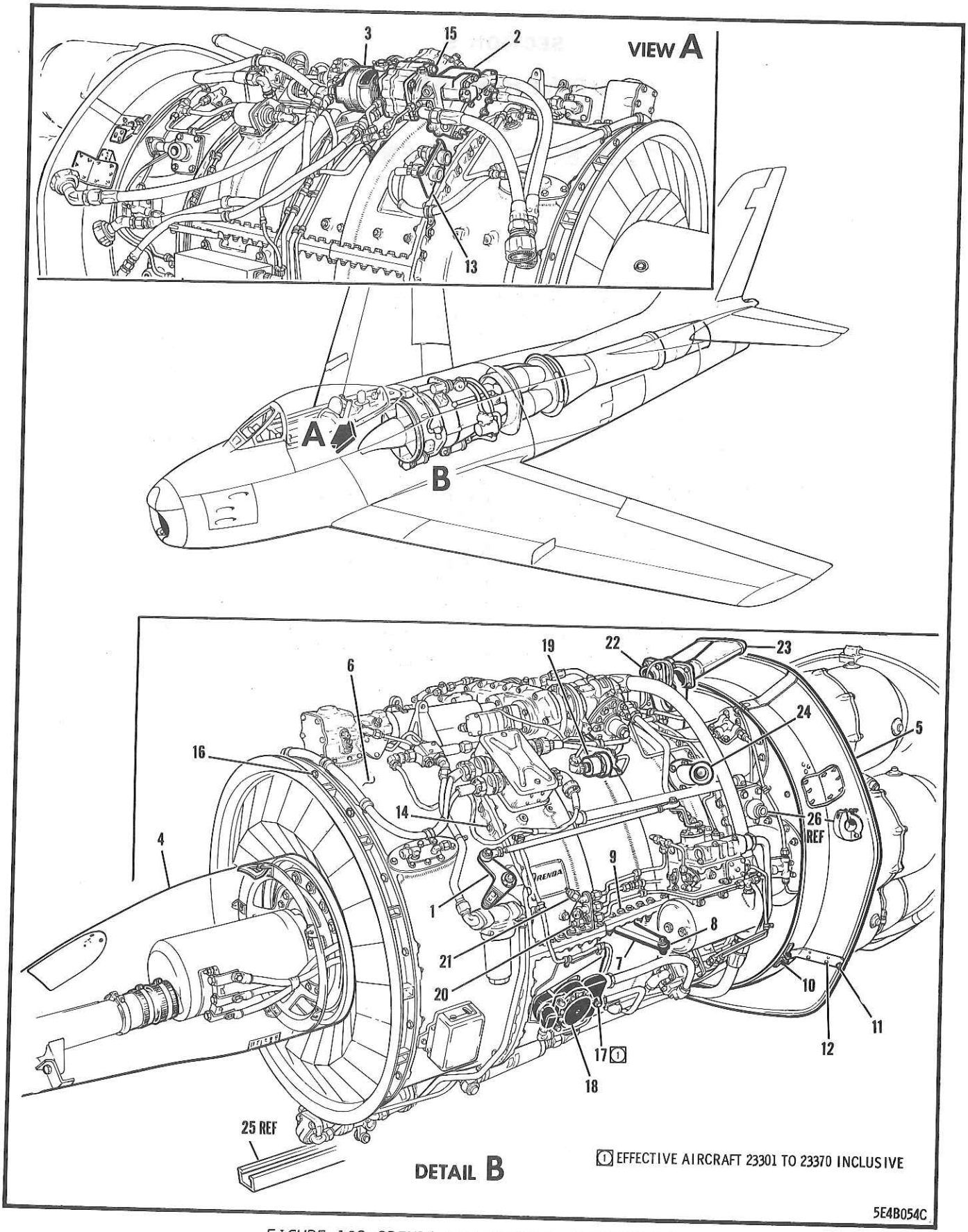

FIGURE 102 ORENDA 10 ENGINE & ACCESSORIES
(EFFECTIVE AIRCRAFT 23001 TO 23370 INCL)

FIGURE AND INDEX NUMBER	GROUP POWER PLANT MAJOR ASSEMBLY ORENDA 10 ENGINE & ACCESSORIES PART NUMBER	1234567 NOMENCLATURE	CODE	UNITS PER ASSY
102 -	13A-62001	ENGINE & ACCESSORIES ASSY - COMPLETE (ORENDA 10)(SEE FIG. 106) (FOR UPPER CODE SEE FIG. 103)	001-370	1
- 1	13A-95004	•CONTROL INSTL - ENGINE THROTTLE (SEE FIG. 112)		REF
- 2	13A-71602	•PUMP ASSY - HYDRAULIC NORMAL SURFACE CTL SYS (COMPLETE) (SEE FIG. 117)		REF
- 3	13A-71604	•PUMP ASSY - HYDRAULIC UTILITY SYSTEM (COMPLETE) (SEE FIG. 117)		REF
- 4	13A-62002-808	•FAIRING ASSY - ENGINE NOSE (SEE FIG. 108)		REF
- 5	13A-32071-3	•FIREWALL ASSY - ORENDA ENGINE UPPER (SEE FIG. 109)		REF
	13A-32071-5	•FIREWALL ASSY - ORENDA ENGINE LOWER (SEE FIG. 109)		REF
- 6	63393	•ENGINE ASSY - ORENDA MK 10-1 (G.F.E.)	001-370	1
	13A-60030	•BRACKET ASSY - ENGINE INSTL GUIDE LH	001-370	1
- 7	13A-60030-3	••BRACKET - ENGINE GUIDE	001-370	1
- 8	KP3	••BALL-BEARING - HEAVY DUTY SINGLE-ROW PLYA-SEAL (FBC)	001-370	1
	AN3-10A	••BOLT -	001-370	1
	AN960-10	••WASHER -	001-370	1
	AN365-1032	••NUT -	001-370	2
- 9	AN101329	•BOLT - (PORT SIDE)	001-370	2
	AN960-616L	•WASHER - (PORT SIDE)	001-370	2
	AN363-624	•NUT - (PORT SIDE)	001-370	1
	13A-60029	•BRACKET ASSY - ENGINE INSTL GUIDE RH	001-370	1
	13A-60029-3	••BRACKET - ENGINE GUIDE	001-370	1
	KP3	••BALL-BEARING - HEAVY DUTY SINGLE-ROW PLYA-SEAL (FBC)	001-370	1
	AN3-104	••BOLT -	001-370	1
	AN960-10	••WASHER -	001-370	1
	AN365-1032	••NUT -	001-370	2
	AN101230	•BOLT - (STARBOARD SIDE)	001-370	2
	AN960-516L	•WASHER - (STARBOARD SIDE)	001-370	2
	AN363-524	•NUT - (STARBOARD SIDE)	001-370	2
-10	AN3-6	•BOLT - (FIREWALL ATTACHING)	001-370	2
	AN960C10	•WASHER -	001-370	2
	AN310-3	•NUT -	001-370	2
	AN381-2-2	•COTTER-PIN -	001-370	2
-11	AN509-8R5	•SCREW - (FIREWALL ATTACHING)	001-370	2
	AN960C8	•WASHER -	001-370	2
	AN363C832	•NUT -	001-370	6
-12	NAS221-8	•SCREW - (FIREWALL ATTACHING)	001-370	6
	AN960C10	•WASHER -	001-370	6
	AN363C1032	•NUT -	001-370	1
-13	13A-50003	•BRACKET - ENGINE FLANGE DISCONNECT	001-370	2
-14	AN101226	•BOLT - (THROTTLE RETAINING)	001-370	8
-15	AN363-524	•NUT - (HYDRAULIC PUMP RETAINING)	001-370	8
	AN960-516	•WASHER -	001-370	4
-16	AN10116	•BOLT - OR •BOLT -	001-370	
	NAS464-4A-13	•NUT - (USE WITH NAS464-4A-13 BOLT ONLY)	001-370	
	AN363C428	•CLAMP - (FUEL FLOWMETER PLUG RETAINING)	301-370	1
-17	AN742D19C	•BOLT -	301-370	1
	AN4-4A	•WASHER -	301-370	1
	AN960-416	•CONDUIT - (NAA)	301-370	1
	10C2B3-8	•TRANSMITTER - FUEL FLOW (EPD)	A21	1
-18	9119-12-A1	•TRANSMITTER - 320-DEG MOVEMENT PRESSURE SYNC STYLE (MULTIPURPOSE)	001-370	1
-19	MS28005-1			

FIGURE AND INDEX NUMBER	GROUP POWER PLANT MAJOR ASSEMBLY ORENDA 10 ENGINE & ACCESSORIES PART NUMBER	1234567 NOMENCLATURE	CODE	UNITS PER ASSY
102 -20	AN929-5	•CAP -	211-370	1
	AN929-4	•CAP -	211-370	1
-21	AN837-4D	•ELBOW -	001-210	1
	AN960-716	•WASHER -	001-040	1
	AN919-6	•REDUCER -	001-040	1
	62829	•SCREW - (ROE)	001-040	1
	AN929-4	•CAP -	001-040	1
	AN742-18C	•CLAMP -	001-040	1
	AN520-10R10	•SCREW -	001-040	1
	AN365-1032	•NUT -	001-040	1
	AN742-8	•CLAMP -	001-040	1
	AN742-6C	•CLAMP -	001-040	1
	AN520-10R10	•SCREW -	001-040	1
	AN365-1032	•NUT -	001-040	1
-22	13-60004	•TUBE ASSY - AIR EJECTOR VEE (REWORK AS PER EO 05-5E-6A/81)	001-370	1
-23	13A-60006	•TUBE ASSY - AIR EJECTOR	001-370	1
	AN3-5A	•BOLT -	001-370	8
	AN960C10	•WASHER -	001-370	8
	AN363-1032	•NUT -	001-370	8
-24	13A-74039	•ELBOW ASSY - HEAT & VENT SYS ENGINE CONN	001-370	1
-25	13A-32007-21	CHANNEL - FUSELAGE STA 204-236 SHROUD (SEE SECTION 3)		REF
-26	13A-32142-3	HINGE - ORENDA ENGINE MOUNT FITTING (SEE SECTION 3)		REF
		(CONTINUED SEE FIG. 104)		

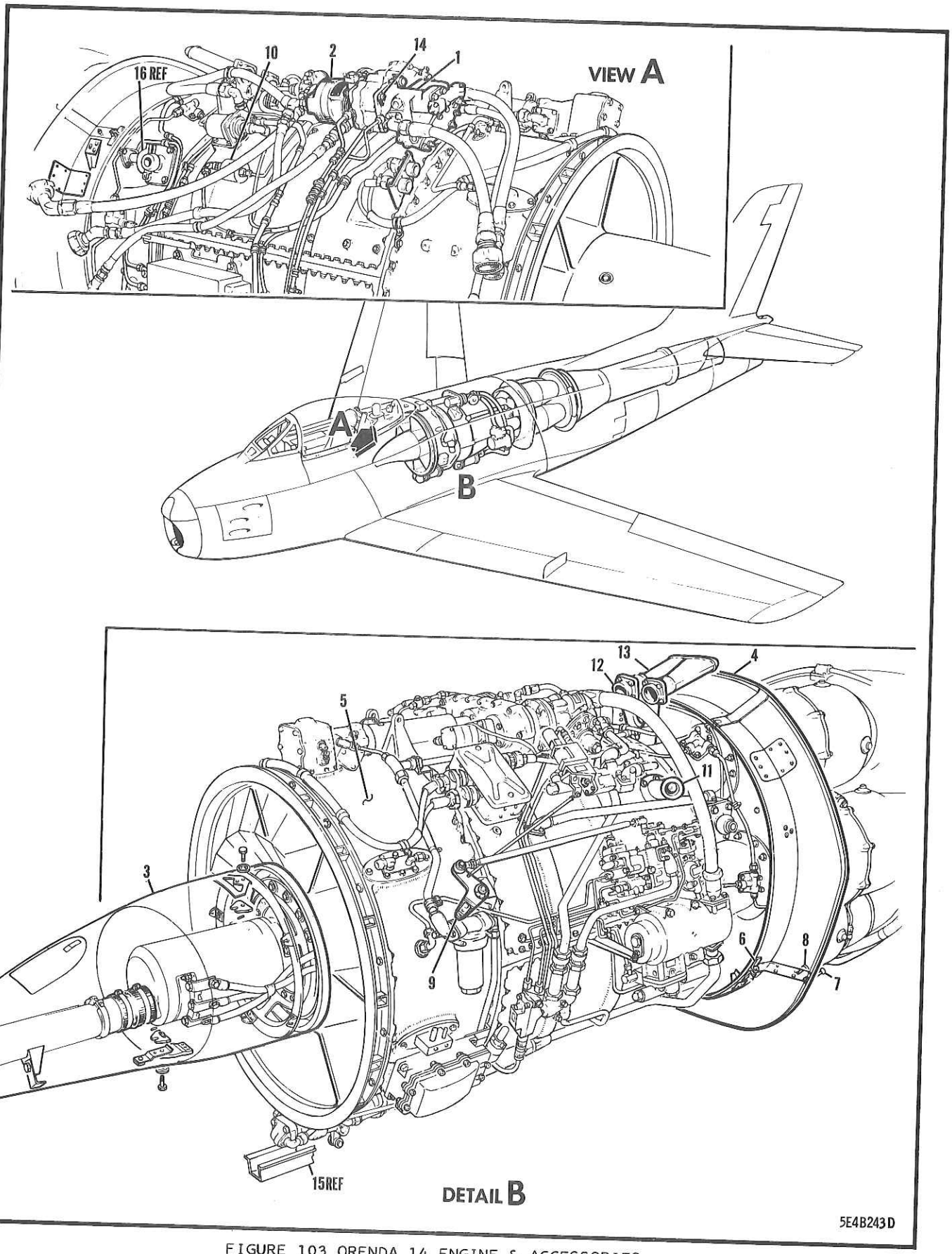

FIGURE 103 ORENDA 14 ENGINE & ACCESSORIES
(EFFECTIVE AIRCRAFT 23371 & SUBS)

FIGURE AND INDEX NUMBER	GROUP POWER PLANT MAJOR ASSEMBLY ORENDA 14 ENGINE & ACCESSORIES PART NUMBER	1234567 NOMENCLATURE	CODE	UNITS PER ASSY
103 -	13B-62001	ENGINE & ACCESSORIES ASSY - COMPLETE (ORENDA 14) (SEE FIG. 107) (FOR LOWER CODE SEE FIG. 102)	371-	1
- 1	13A-71602	•PUMP ASSY - HYD NORMAL SURFACE CONTROL SYS (COMPLETE) (SEE FIG. 117)		REF
- 2	13A-71604	•PUMP ASSY - HYDRAULIC UTILITY SYS (COMPL) (SEE FIG. 117)		REF
- 3	13A-62002-808	•FAIRING ASSY - ENGINE NOSE (SEE FIG. 108)		REF
- 4	13A-32071-803	•FIREWALL ASSY - ORENDA ENGINE UPPER (SEE FIG. 109)		REF
	13A-32071-805	•FIREWALL ASSY - ORENDA ENGINE LOWER (SEE FIG. 109)		REF
- 5	73900	•ENGINE ASSY - ORENDA MK 14-2 (G.F.E.)	371-	1
- 6	AN3-6	•BOLT - (FIREWALL ATTACHING)	371-450	2
	AN960C10	•WASHER -	371-450	2
	AN310-3	•NUT -	371-450	2
	AN381-2-12	•COTTER-PIN -	371-450	2
- 7	AN509-8R5	•SCREW - (FIREWALL ATTACHING)	371-	2
	AN960C8	•WASHER -	371-	2
	AN363C832	•NUT -	371-	2
- 8	NAS221-8	•SCREW - (FIREWALL ATTACHING)	371-	6
	AN960C10	•WASHER -	371-	6
	AN363C1032	•NUT -	371-	6
- 9	13-62026	•PLATE - THROTTLE CONTROL SERRATED	371-400	1
-10	MS28005-1	•TRANSMITTER - 320-DEG MOVEMENT PRESSURE SYNC STYLE (MULTIPURPOSE) (SUPPLIED BY CANADAIR & INSTALLED BY A.V. ROE)	371-	1
-11	13B-74014	•ELBOW ASSY - H/VENT SYSTEM ENG CONNECTING	371-	1
-12	13-60004	•TUBE ASSY - AIR EJECTOR VEE	371-	1
-13	13A-60006	•TUBE ASSY - AIR EJECTOR	371-	1
	AN3-5A	•BOLT - (VEE TUBE TO EJECTOR TUBE ATT)	371-	8
	AN960C10	•WASHER -	371-	8
	AN363-1032	•NUT -	371-	8
-14	AN363-524	•NUT -	371-	8
	AN960-516	•WASHER -	371-	8
	AN4044-1	•GASKET -	371-	AR
-15	13A-32007-21	CHANNEL - FUSELAGE STA 204-236 SHROUD (SEE SECTION 3)		REF
-16	13A-32153-3	HINGE - ORENDA ENG MOUNT RH (SEE SECTION 3)		REF

(CONTINUED SEE FIG. 105)

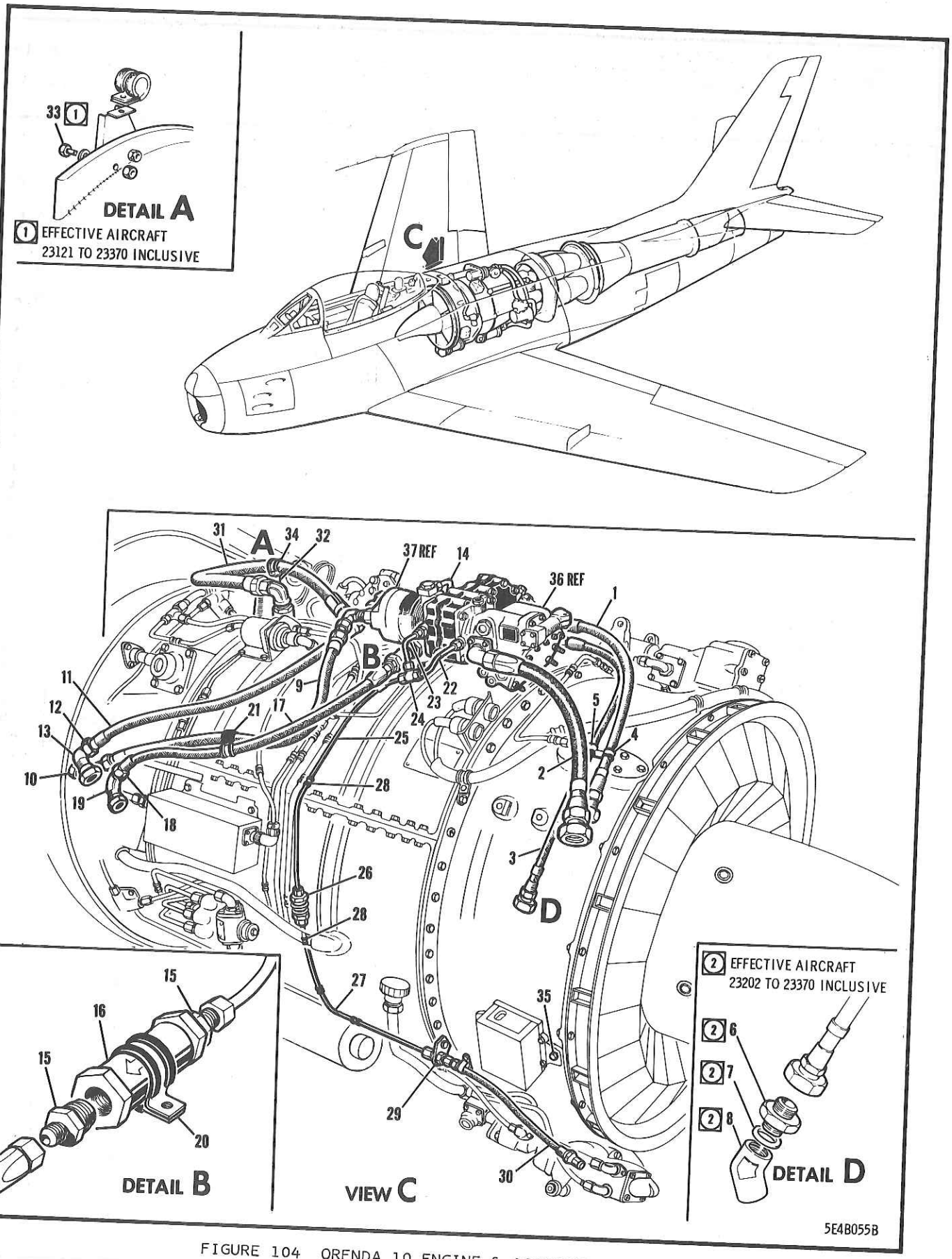

FIGURE 104 ORENDA 10 ENGINE & ACCESSORY LINES
(EFFECTIVE AIRCRAFT 23001 TO 23370 INCL)

FIGURE AND INDEX NUMBER	GROUP POWER PLANT MAJOR ASSEMBLY ORENDA 10 ENGINE & ACCESSORY LINES PART NUMBER	1234567 NOMENCLATURE	CODE	UNITS PER ASSY
104 -	13A-62001	ENGINE & ACCESSORIES ASSY - COMPLETE (ORENDA 10) (SEE FIG. 102) (FOR UPPER CODE SEE FIG. 105)	001-370	REF
- 1	AN6292-8-26-1/2	•HOSE ASSY - (NORMAL SURFACE CTL PRESS.)	001-370	1
		OR		
	068001-8-26-1/2	•HOSE ASSY - MULTIPLE WIRE BRAID (PPE)	001-370	
	13A-71221-5	•TAG - HYDRAULIC HOSE IDENTIFICATION	001-370	1
	150-S1-8D	•COUPLING HALF - SELF-SEALING (PPE)	001-370	1
	155-25-8D	•COUPLING-NUT - (PPE)	001-370	1
- 2	MS28741-12-0184	•HOSE ASSY - DETACHABLE END FTG MED PRESS. (NORMAL SURFACE CONTROL SUCTION)	001-370	1
	13A-71221-3	•TAG - HYDRAULIC HOSE IDENTIFICATION	001-370	1
	150-51-12D	•COUPLING HALF - SELF-SEALING (PPE)	001-370	1
	155-25-12D	•COUPLING-NUT - (PPE)	001-231	1
- 3	MS28741-6-0294	•HOSE ASSY - DETACHABLE END FTG MED PRESS. (NORMAL SUR/CTL PUMP CASE DRAIN)	232-370	1
	MS28741-6-0260	•HOSE ASSY - DETACHABLE END FTG MED PRESS. (NORMAL SUR/CTL PUMP CASE DRAIN)	001-370	1
	13A-71221-7	•TAG - HYDRAULIC HOSE IDENTIFICATION	001-370	1
	150-S1-6D	•COUPLING HALF - SELF-SEALING (PPE)	001-370	1
	155-25-6D	•COUPLING-NUT - (PPE)	001-370	1
- 4	AN742D12C	•CLAMP -	001-370	1
- 5	AN742D16C	•CLAMP -	001-370	1
	AN520-10R10	•SCREW -	001-370	1
	AN365-1032	•NUT -	101-370	1
- 6	AN815-6D	•UNION -	101-370	2
- 7	AN6290-6	•GASKET -	101-370	1
- 8	AN941-6D	•ELBOW -	001-370	1
- 9	AN6292-8-25-1/2	•HOSE ASSY - (UTILITY PRESSURE)	001-370	
		OR		
	068001-8-25-1/2	•HOSE ASSY - MULTIPLE WIRE BRAID (PPE)	001-370	1
	13A-71221-11	•TAG - HYDRAULIC HOSE IDENTIFICATION	001-370	1
	150-S1-8D	•COUPLING HALF - SELF-SEALING (PPE)	001-370	1
	155-25-8D	•COUPLING-NUT - (PPE)	001-370	1
	AN6290-8	•GASKET -	001-370	1
	AN815-8D	•UNION -	001-370	2
	AN6290-8	•GASKET -	001-370	1
-10	AN941-8D	•ELBOW -	001-370	1
-11	MS28741-12-0280	•HOSE ASSY - DETACHABLE END FITTING MEDIUM PRESSURE (UTILITY SUCTION)	001-370	1
	13A-71221-9	•TAG - HYDRAULIC HOSE IDENTIFICATION	001-370	1
	150-S1-12D	•COUPLING HALF - SELF-SEALING (PPE)	001-370	1
	155-25-12D	•COUPLING-NUT - (PPE)	001-370	2
	AN6290-12	•GASKET -	001-370	1
-12	AN815-12D	•UNION -	001-370	1
-13	AN939-12D	•ELBOW -	001-370	1
-14	13A-71820-37	•LINE ASSY - UTILITY HYD PUMP CASE DRAIN (BANJO ON PUMP TO CHECK-VALVE)(RED.)	001-370	2
-15	AN919-12D	•REDUCER -	001-370	2
	AN6290-8	•GASKET -	001-370	1
-16	1111-517733	•VALVE - CHECK (PAC)	001-370	1
-17	MS28741-6-0274	•HOSE ASSY - DETACHABLE END FTG MED PRESS. (UTILITY PUMP CASE DRAIN)	001-370	1
	13A-71221-13	•TAG - HYDRAULIC HOSE IDENTIFICATION	001-370	2
	AN6290-6	•GASKET -	001-370	1
-18	AN815-6D	•UNION -	001-370	1
	150-S1-6D	•COUPLING HALF - SELF-SEALING (PPE)	001-370	1
	155-25-6D	•COUPLING-NUT - (PPE)	001-370	1
-19	AN941-6D	•ELBOW -	001-370	1
-20	AN742-21C	•CLAMP -		

FIGURE AND INDEX NUMBER	GROUP POWER PLANT MAJOR ASSEMBLY ORENDA 10 ENGINE & ACCESSORY LINES PART NUMBER	1234567 NOMENCLATURE	CODE	UNITS PER ASSY
104 -21	AN742D8C	•CLAMP -	001-370	1
	AN742D12C	•CLAMP -	001-370	1
	AN520-10R8	•SCREW -	001-370	1
	AN365-1032	•NUT -	001-370	1
-22	13A-71821-19	•LINE ASSY - NORMAL SURFACE CONTROL PUMP SEAL DRAIN (PUMP TO TEE STBD SIDE)	001-370	1
-23	13A-71821-17	•LINE ASSY - UTILITY PUMP SEAL DRAIN (PUMP TO TEE STARBOARD SIDE)	001-370	1
-24	AN824-4D	•TEE -	001-370	1
-25	13A-71821-23	•LINE ASSY - SEAL DRAIN TEE TO CV STBD SIDE	001-370	1
-26	10-1344-75	•VALVE - SWING CHECK (PAC)	001-370	1
	AN742D16C	•CLAMP -	001-370	1
	AN742D18C	•CLAMP -	001-370	1
	AN4CH5A	•BOLT -	001-370	1
-27	13A-71821-25	•LINE ASSY - SEAL DRAIN VALVE TO LOWER BULKHEAD UNION	001-370	1
-28	AN742D6C	•CLAMP -	001-370	4
	AN742D10C	•CLAMP -	001-370	2
	AN520-10R10	•SCREW -	001-370	4
	AN520-10R7	•SCREW -	001-370	2
	AN960-10C	•WASHER -	001-370	2
	AN365-1032	•NUT -	001-370	6
-29	13A-71222	•SUPPORT - ENGINE MT PUMP SEAL DRAIN LINE	001-370	1
	AN832-4D	•UNION -	001-370	1
	AN924-4D	•NUT -	001-370	1
-30	MS28741-4-0120	•HOSE ASSY - DETACHABLE END FITTING MEDIUM PRESSURE (SEAL DRAIN)	001-370	1
	13A-71221-15	•TAG - HYD HOSE IDENTIFICATION		
	AN902B12	•GASKET -	001-370	1
	AN924-12D	•NUT -	001-370	1
-31	MS28741-12-0300	•HOSE ASSY - DETACHABLE END FITTING MEDIUM PRESSURE (OIL RETURN)	001-370	1
-32	13A-62003	•BRACKET - ENGINE OIL RETURN LINE	001-370	1
-33	AN101325	•BOLT -	121-370	2
	AN960-616L	•WASHER -	121-370	2
-34	AN742D19C	•CLAMP -	001-370	1
	AN520-10R10	•SCREW -	001-370	1
	AN960PD10	•WASHER -	001-370	1
	AN363-1032	•NUT -	001-370	1
-35	AN315-6R	•NUT - (ON 65405 BASE PLATE) OR	001-370	4
	AN316-6R	•NUT - (ON 65405 BASE PLATE)		
-36	13A-71602	PUMP ASSY - HYDRAULIC NORMAL SURFACE CONTROL SYSTEM (SEE FIG. 117)	001-370	REF
-37	13A-71604	PUMP ASSY - HYDRAULIC UTILITY SYSTEM (SEE FIG. 117)		REF

-000-

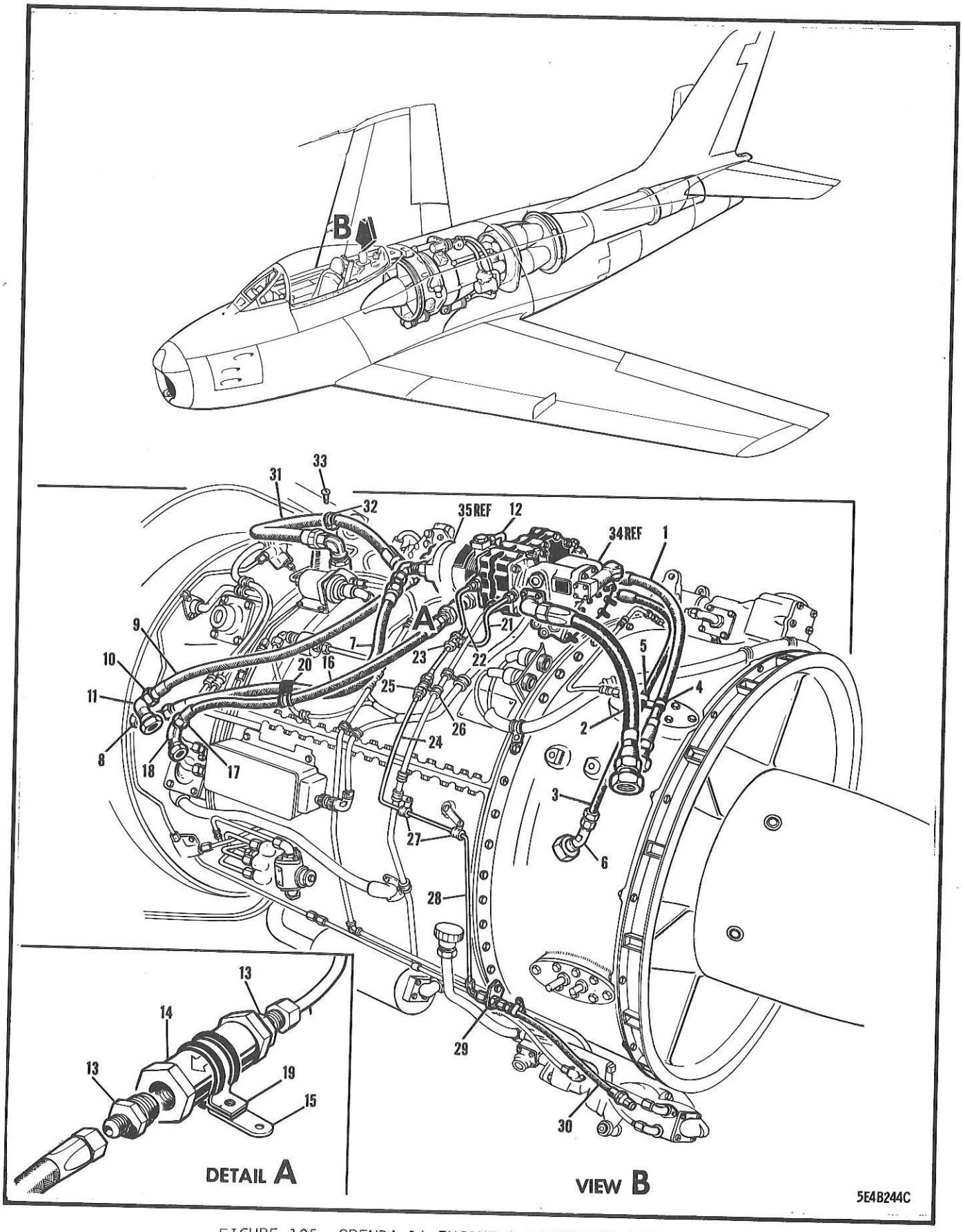

FIGURE 105 ORENDA 14 ENGINE & ACCESSORY LINES
(EFFECTIVE AIRCRAFT 23371 & SUBS)

FIGURE AND INDEX NUMBER	GROUP POWER PLANT MAJOR ASSEMBLY ORENDA 14 ENGINE & ACCESSORY LINES PART NUMBER	1234567 NOMENCLATURE	CODE	UNITS PER ASSY
105 -	13B-62001	ENGINE & ACCESSORIES ASSY - COMPLETE (ORENDA 14) (SEE FIG. 103) (FOR LOWER CODE SEE FIG. 104)	371-	REF
- 1	AN6292-8-26-1/2	•HOSE ASSY - (NORMAL SURFACE CTL PRESS.)	371-	1
		OR		
	068001-8-26-1/2	•HOSE ASSY - MULTIPLE WIRE BRAID (PPE)	371-	
	13A-71221-5	•TAG - HYDRAULIC HOSE IDENTIFICATION	371-	1
	150-S1-8D	•COUPLING HALF - SELF-SEALING (PPE)	371-	1
	155-25-8D	•COUPLING-NUT - (PPE)	371-	1
- 2	MS28741-12-0184	•HOSE ASSY - DETACHABLE END FITTING M/P (NORMAL SUR/CTL PUMP SUCTION)	371-	1
	13A-71221-3	•TAG - HYDRAULIC HOSE IDENTIFICATION	371-	1
	150-S1-12D	•COUPLING HALF - SELF-SEALING (PPE)	371-	1
	155-25-12D	•COUPLING-NUT - (PPE)	371-	1
- 3	MS28741-6-0260	•HOSE ASSY - HYD & PNEU SWIVEL CONNECTOR (NORMAL SURFACE CONTROL CASE DRAIN)	371-	1
	13A-71221-7	•TAG - HYDRAULIC HOSE IDENTIFICATION	371-	1
	150-S1-6D	•COUPLING HALF - SELF-SEALING (PPE)	371-	1
	155-25-6D	•COUPLING-NUT - (PPE)	371-	1
- 4	AN742D19C	•CLAMP -	371-	1
- 5	AN742D13C	•CLAMP -	371-	1
	AN520-10R10	•SCREW -	371-	1
	AN365-1032	•NUT -	371-	1
	AN815-6D	•UNION -	371-	2
	AN6290-6	•GASKET -	371-	1
- 6	AN941-6D	•ELBOW -	371-	1
- 7	AN6292-8-25-1/2	•HOSE ASSY - (UTILITY PRESSURE)	371-	
		OR		
	068001-8-25-1/2	•HOSE ASSY - MULTIPLE WIRE BRAID (PPE)	371-	1
	13A-71221-11	•TAG - HYDRAULIC HOSE IDENTIFICATION	371-	1
	150-S1-8D	•COUPLING HALF - SELF-SEALING (PPE)	371-	1
	155-25-8D	•COUPLING-NUT - (PPE)	371-	1
	AN6290-8	•GASKET -	371-	1
	AN815-8D	•UNION -	371-	1
	AN6290-8	•GASKET -	371-	1
- 8	AN941-8D	•ELBOW -	371-	1
- 9	MS28741-12-0280	•HOSE ASSY - DETACHABLE END FITTING MEDIUM PRESSURE (UTILITY PUMP SUCTION)	371-	1
	13A-71221-9	•TAG - HYDRAULIC HOSE IDENTIFICATION	371-	1
	150-S1-12D	•COUPLING HALF - SELF-SEALING (PPE)	371-	1
	155-25-12D	•COUPLING-NUT - (PPE)	371-	2
-10	AN6290-12	•GASKET -	371-	1
	AN815-12D	•UNION -	371-	1
-11	AN939-12D	•ELBOW -	371-	1
-12	13A-71820-51	•LINE ASSY - UTILITY CASE DRAIN TO VALVE	371-	2
-13	AN919-12D	•REDUCER -	371-	2
	AN6290-8	•GASKET -	371-	1
-14	1111-517733	•VALVE - CHECK (PAC)	371-	1
-15	13B-62001-4	•CLIP - CHECK-VALVE	371-	1
-16	MS28741-6-0274	•HOSE ASSY - DETACHABLE END FITTING MEDIUM PRESSURE (UTILITY CASE DRAIN)	371-	1
	13A-71221-13	•TAG - HYDRAULIC HOSE IDENTIFICATION	371-	2
	AN6290-6	•GASKET -	371-	1
-17	AN815-6D	•UNION -	371-	1
	150-S1-6D	•COUPLING HALF - SELF-SEALING (PPE)	371-	1
	155-25-6D	•COUPLING-NUT - (PPE)	371-	1
-18	AN941-6D	•ELBOW -	371-	1
-19	AN742-21C	•CLAMP -	371-	1
	AN742-13C	•CLAMP -	371-	1
	AN742-10C	•CLAMP -	371-	1

FIGURE AND INDEX NUMBER	GROUP POWER PLANT MAJOR ASSEMBLY ORENDA 14 ENGINE & ACCESSORY LINES PART NUMBER	1234567 NOMENCLATURE	CODE	UNITS PER ASSY
105 -20	AN742D8C	•CLAMP -	371-	1
	AN742D12C	•CLAMP -	371-	1
	AN520-10R8	•SCREW -	371-	1
	AN365-1032	•NUT -	371-	1
-21	13A-71821-31	•LINE ASSY - NORMAL CONTROL SEAL DRAIN PUMP TO TEE	371-	1
-22	13A-71821-35	•LINE ASSY - UTILITY SEAL DRAIN PUMP TO TEE	371-	1
-23	AN824-4D	•TEE -	371-	1
-24	13A-71821-33	•LINE ASSY - SEAL DRAIN TEE TO VALVE	371-	1
-25	527-4D	•VALVE - SWING CHECK (PAC)	371-	1
	AN742D18C	•CLAMP -	371-	1
-26	AN742D8L	•CLAMP -	371-	2
-27	AN742D6L	•CLAMP -	371-	2
	13B-62001-6	•CLIP - ENGINE ACCESSORIES	371-	1
	AN515-10A8	•SCREW -	371-	3
	AN960-10	•WASHER -	371-	3
	AN362-1032	•NUT -	371-	3
	AN4-3	•BOLT -	371-	1
-28	13A-71821-37	•LINE ASSY - SEAL DRAIN VALVE TO HOSE	371-	1
-29	13A-71222	•SUPPORT - ENGINE MT PUMP SEAL DRAIN LINE	371-	1
	AN833-4D	•ELBOW -	371-	1
	AN924-4D	•NUT -	371-	1
-30	MS28741-4-0120	•HOSE ASSY - DETACHABLE END FITTING MEDIUM PRESSURE (SEAL DRAIN HYDRAULIC PUMP)	371-	1
	13A-71221-15	•TAG - HYDRAULIC HOSE IDENTIFICATION	371-	1
	AN902B12	•GASKET -	371-	1
	AN924-12D	•NUT -	371-	1
-31	MS28741-12-0300	•HOSE ASSY - DETACHABLE END FITTING MEDIUM PRESSURE (ENGINE OIL RETURN)	371-	1
-32	AN742D19C	•CLAMP -	371-	1
-33	AN520-10R10	•SCREW -	371-	1
	AN960PD10	•WASHER -	371-	1
	AN363-1032	•NUT -	371-	1
	AN364-428	•NUT - (ELECTRICAL JUNCTION BOX COVER)	371-	2
-34	13A-71602	PUMP ASSY - HYDRAULIC NORMAL SURFACE CTL SYSTEM (COMPLETE) (SEE FIG. 117)		REF
-35	13A-71604	PUMP ASSY - HYDRAULIC UTILITY SYSTEM (COMPLETE) (SEE FIG. 117)		REF

-000-

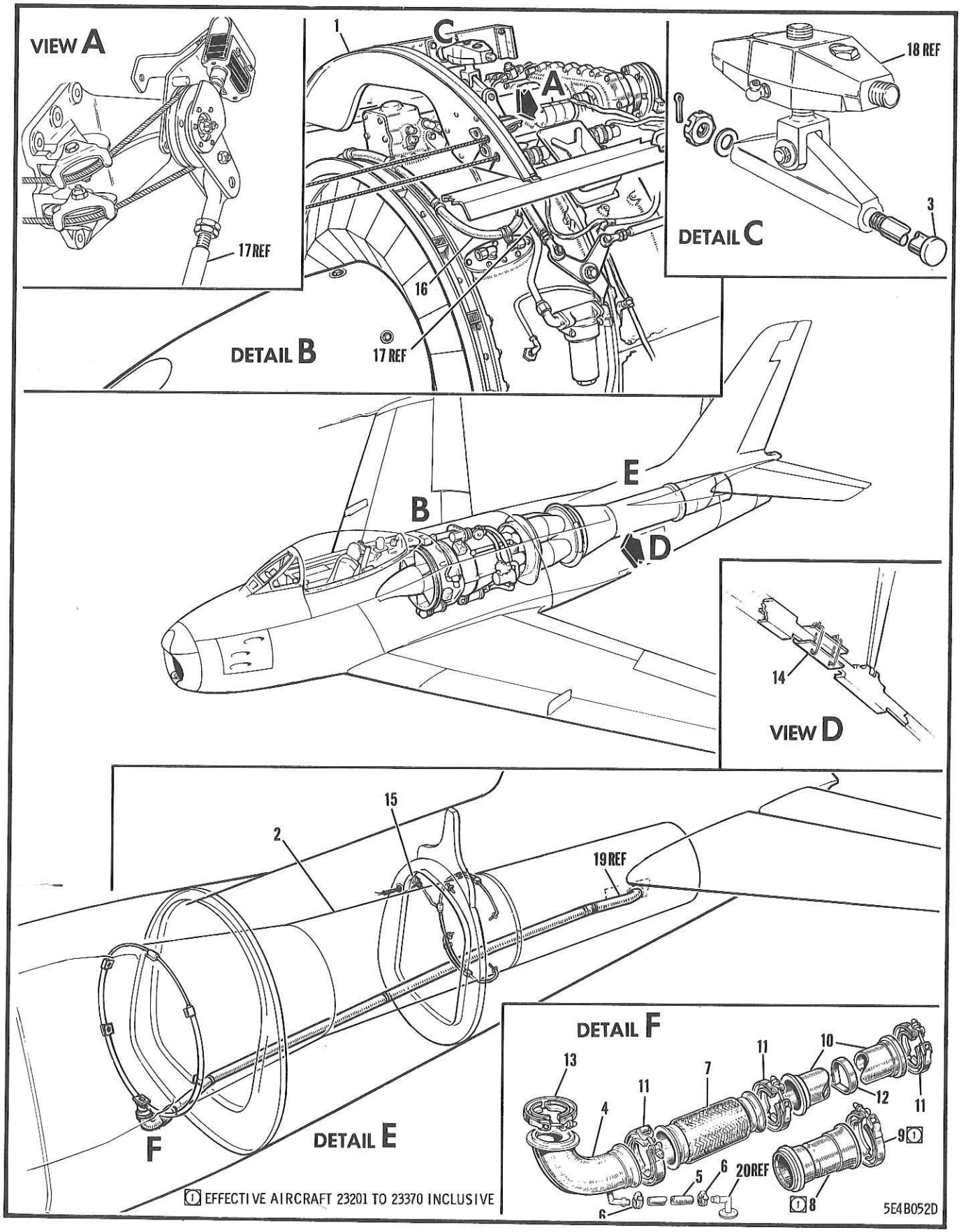

FIGURE 106 ORENDA 10 POWER PLANT
(EFFECTIVE AIRCRAFT 23001 TO 23370 INCL)

FIGURE AND INDEX NUMBER	GROUP POWER PLANT MAJOR ASSEMBLY ORENDA 10 POWER PLANT PART NUMBER	1234567 NOMENCLATURE	CODE	UNITS PER ASSY
106 -	13A-60001	POWER PLANT INSTL - ORENDA 10 (SEE FIG. 1)	001-200	NP
	13A-60001-800	POWER PLANT INSTL - ORENDA 10 (FOR UPPER CODE SEE FIG. 107)	201-370	NP
- 1	13A-62001	•ENGINE & ACCESSORIES ASSY - COMPLETE (ORENDA 10) (SEE FIG. 102)		REF
	170-43001	•CONTROL INSTL - ENGINE (SEE FIG. 112)		REF
	13A-64001	•FUEL SYS INSTL - FUSELAGE (SEE SECTION 12)		REF
	13A-65001	•OIL SYSTEM EQUIP. INSTL - COMPLETE (SEE SECTION 13)		REF
- 2	13A-69009-809	•TAIL-PIPE ASSY - ENGINE EXH (ORENDA 10) (SEE FIG. 110)		REF
- 3	13A-60008	•PIN - ORENDA ENGINE FORWARD SUPPORT	001-370	1
	AN960-616	•WASHER -	001-370	1
	AN320-6	•NUT -	001-370	1
	AN380-3-4	•COTTER-PIN -	001-370	1
	13A-60003	•DUCT INSTL - FUSELAGE STA 274-371 ENGINE WASTE AIR	001-200	NP
	13B-60003-800	•DUCT INSTL - FUSELAGE STA 274-371 ENGINE WASTE AIR	201-370	NP
- 4	13A-60023-50	••ELBOW ASSY - ENGINE WASTE AIR DUCT (AS PER EO 05-5E-6A/24)	001-370	1
- 5	13A-60003-7	••HOSE - WASTE AIR DUCT FUEL DRAIN	001-300	1
	13A-60003-9	••HOSE - WASTE AIR DUCT FUEL DRAIN	301-370	1
- 6	AN737-26	••CLAMP -	001-370	2
- 7	13A-60020	••CONNECTOR ASSY - ENGINE WASTE AIR DUCT	001-370	1
	13A-60031	••SPARE PART ASSY FOR 13A-60020	001-370	
- 8	13B-60030	••ADAPTER ASSY - ENGINE WASTE AIR DUCT	201-370	1
- 9	4266-312-M	••COUPLER - ONE-LATCH 2-SEGMENT QUICK (MPC)	201-370	1
-10	13A-60003-3	••TUBE ASSY - ENGINE WASTE AIR DUCT	001-200	1
	13B-60003-3	••TUBE ASSY - ENGINE WASTE AIR DUCT	201-370	1
-11	4266-312-M	••COUPLER - ONE-LATCH 2-SEGMENT QUICK (MPC)	001-370	3
-12	AN742-36	••CLAMP -	001-200	3
	AN742-40	••CLAMP -	201-370	3
	AN520-10R8	••SCREW -	001-370	3
		OR	001-370	
	AN3-4A	•BOLT -	001-100	3
	AN363-1032	••NUT -	101-370	2
	AN363-1032	••NUT -	001-370	1
-13	4266-312-M	•COUPLER - ONE-LATCH 2-SEGMENT QUICK (MPC)	001-370	1
-14	13B-69062	•CLIP - TAIL-PIPE SAFETY-LOCK (STA 308) (AS PER EO 05-5E-6A/142)	001-370	2
	AN416-1	•PIN - (AS PER EO 05-5E-6A/142)	001-370	1
-15	191-540-271A	WIRE SPARE ASSY - ENGINE FIRE DETECTION DISCONNECT PLUG		
	AN3106B14S2P	•PLUG -	001-370	1
	2W1SR16-22-91	•WASHER - PLAIN (NAA)	001-370	1
	2W1F32-22-63	•WASHER - PLAIN (NAA)	001-370	1
	AN3054-6	•NUT -	001-370	1
-16	191-540-260C	HARNESS SPARE ASSY - ENGINE EXTENSION DISC.	001-370	1
	AN3100M20-16P	•RECEPTACLE -	001-370	1
	AN3100M20-27P	•RECEPTACLE -	001-370	1
	AN3106M24-28S	•PLUG -	001-370	1
	AN3106M28-11S	•PLUG -	001-370	1
	10C2E7-52	•CONDUIT - (NAA)	001-370	1
	10C2E8-10	•CONDUIT - (NAA)	001-370	4
	MIL-L-1140	•CORD - TIE - 1/32	001-370	AR
-17	13-62028-15	ROD - THROTTLE CONTROL (SEE FIG. 112)		REF
-18	13A-32026	FITTING ASSY - ORENDA ENGINE FORWARD SUP. (SEE SECTION 3)		REF
-19	13A-60009-3	ELBOW ASSY - ENGINE WASTE AIR DUCT (SEE SECTION 3)		REF
-20	13A-60024-3	TUBE ASSY - ENGINE WASTE AIR DUCT DRAIN (SEE SECTION 3)		REF

-000-

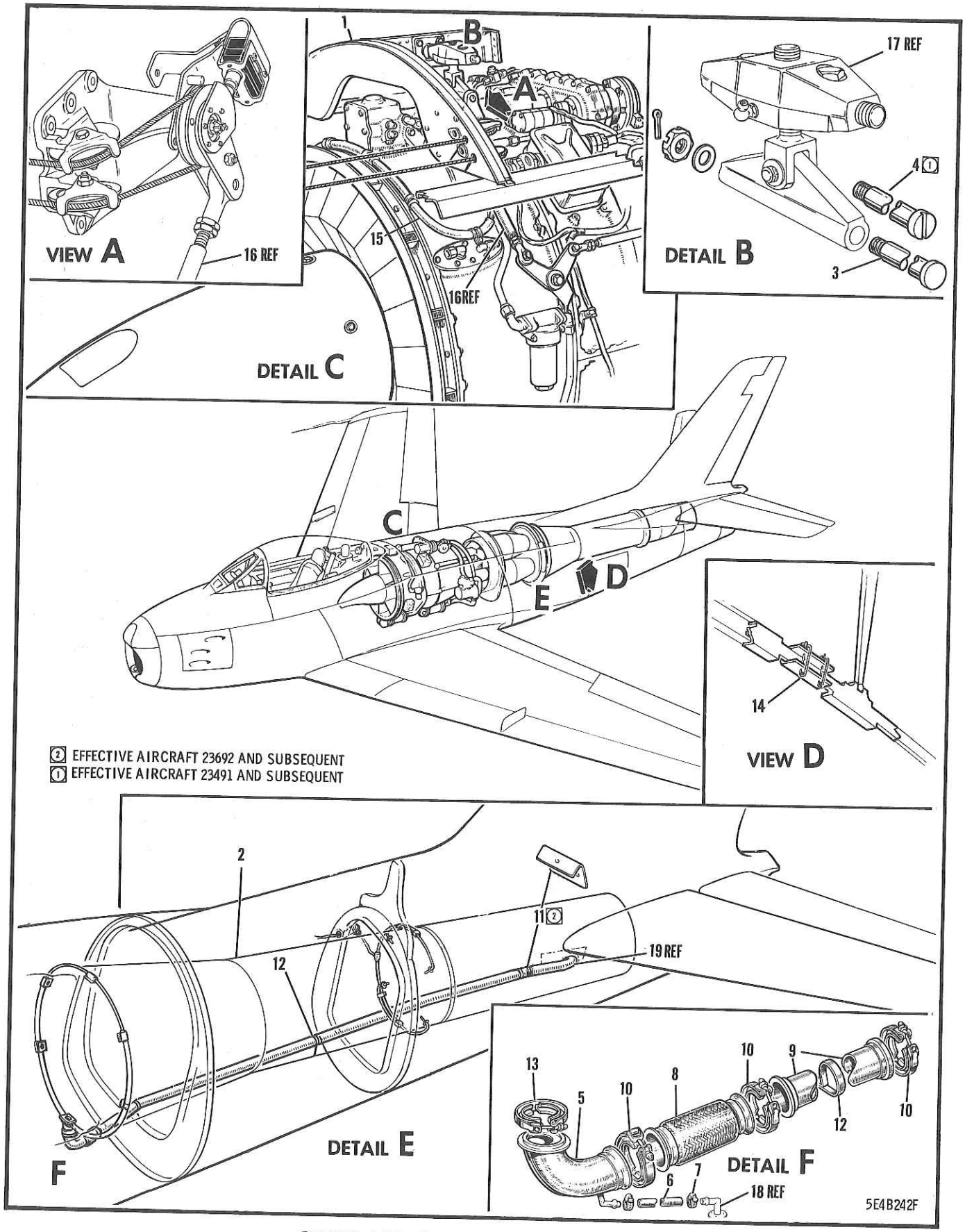

FIGURE 107 ORENDA 14 POWER PLANT
(EFFECTIVE AIRCRAFT 23371 & SUBS)

FIGURE AND INDEX NUMBER	GROUP POWER PLANT MAJOR ASSEMBLY ORENDA 14 POWER PLANT PART NUMBER	1234567 NOMENCLATURE	CODE	UNITS PER ASSY
107 -	13B-60001	POWER PLANT INSTL - (ORENDA 14) (SEE FIG. 1) (FOR LOWER CODE SEE FIG. 106)	371-	NP
- 1	13B-62001	•ENGINE & ACCESSORIES ASSY - COMPLETE (ORENDA 14) (SEE FIG. 103)		REF
	170-43001	•CONTROL INSTL - ENGINE (SEE FIG. 112)		REF
	13A-64001	•FUEL SYSTEM INSTL - FUSELAGE (SEE SECTION 12)		REF
	13A-65001-900	•OIL SYSTEM INSTL - ENGINE (SEE SECTION 13)		REF
- 2	13B-69009-806	•TAIL-PIPE ASSY - ENGINE EXH (ORENDA 14) (SEE FIG. 111)		REF
- 3	13A-60008	•PIN - ORENDA ENGINE FORWARD SUPPORT	371-490	1
- 4	13A-60008-3	•PIN - ORENDA ENGINE FORWARD SUPPORT	491-	1
	AN960-616L	•WASHER -	371-	1
	AN320-6	•NUT -	371-	1
	AN380-3-4	•COTTER-PIN -	371-	1
	13B-60003-802	•DUCT INSTL - FUSELAGE STA 274-371 ENGINE WASTE AIR	371-	NP
- 5	13B-60023	••ELBOW ASSY - ENGINE WASTE AIR DUCT	371-	1
- 6	13A-60003-9	••HOSE - WASTE AIR DUCT FUEL DRAIN	371-	1
- 7	AN737-26	••CLAMP -	371-	2
- 8	13B-60022	••CONNECTOR ASSY - ENGINE WASTE AIR DUCT	371-	1
- 9	13B-60003-11	••TUBE ASSY - ENGINE WASTE AIR DUCT	371-	1
-10	4266-312-M	••COUPLER - ONE-LATCH 2-SEGMENT QUICK (MPC)	371-	3
-11	13-34132-10	••BRACKET - ENGINE WASTE AIR DUCT STA 363	692-	1
	AN520-10R10	••SCREW - (BRACKET ATTACHING)	692-	2
	AN960-10	••WASHER -	692-	4
	AN363-1032	••NUT -	692-	2
-12	AN742-40	••CLAMP -	371-691	3
		OR		
	AN742-38	••CLAMP -	371-691	
	MS21919H40	••CLAMP - AIRCRAFT LOOP TYPE SUP. CUSHIONED	692-	3
	AN3-4A	••BOLT -	371-	3
	AN363-1032	••NUT -	371-	2
-13	4266-362-M	•COUPLER - ONE-LATCH 2-SEGMENT QUICK (MPC)	371-	1
-14	13B-69062	•CLIP - TAIL-PIPE SAFETY-LOCK (STA 308) (AS PER EO 05-5E-6A/142)	371-	1
	AN416-1	•PIN - (AS PER EO 05-5E-6A/142)	371-	2
-15	191-540-271A	WIRE SPARE ASSY - ENGINE FIRE DETECTION DISCONNECT PLUG	371-	1
	AN3106B14S2P	•PLUG -	371-	1
	2W1SR16-22-91	•WASHER - PLAIN (NAA)	371-	1
	2W1F32-22-63	•WASHER - PLAIN (NAA)	371-	1
	AN3054-6	•NUT -	371-	1
-16	13-62028-15	ROD - THROTTLE CONTROL (SEE FIG. 112)		REF
-17	13A-32026-801	FITTING ASSY - ORENDA ENGINE FWD SUPPORT (SEE SECTION 3)		REF
-18	13A-60024-3	TUBE ASSY - ENGINE WASTE AIR DUCT DRAIN (SEE SECTION 3)		REF
-19	13B-60032	DUCT ASSY - ENGINE WASTE AIR (SEE SECT. 3)		REF

-000-

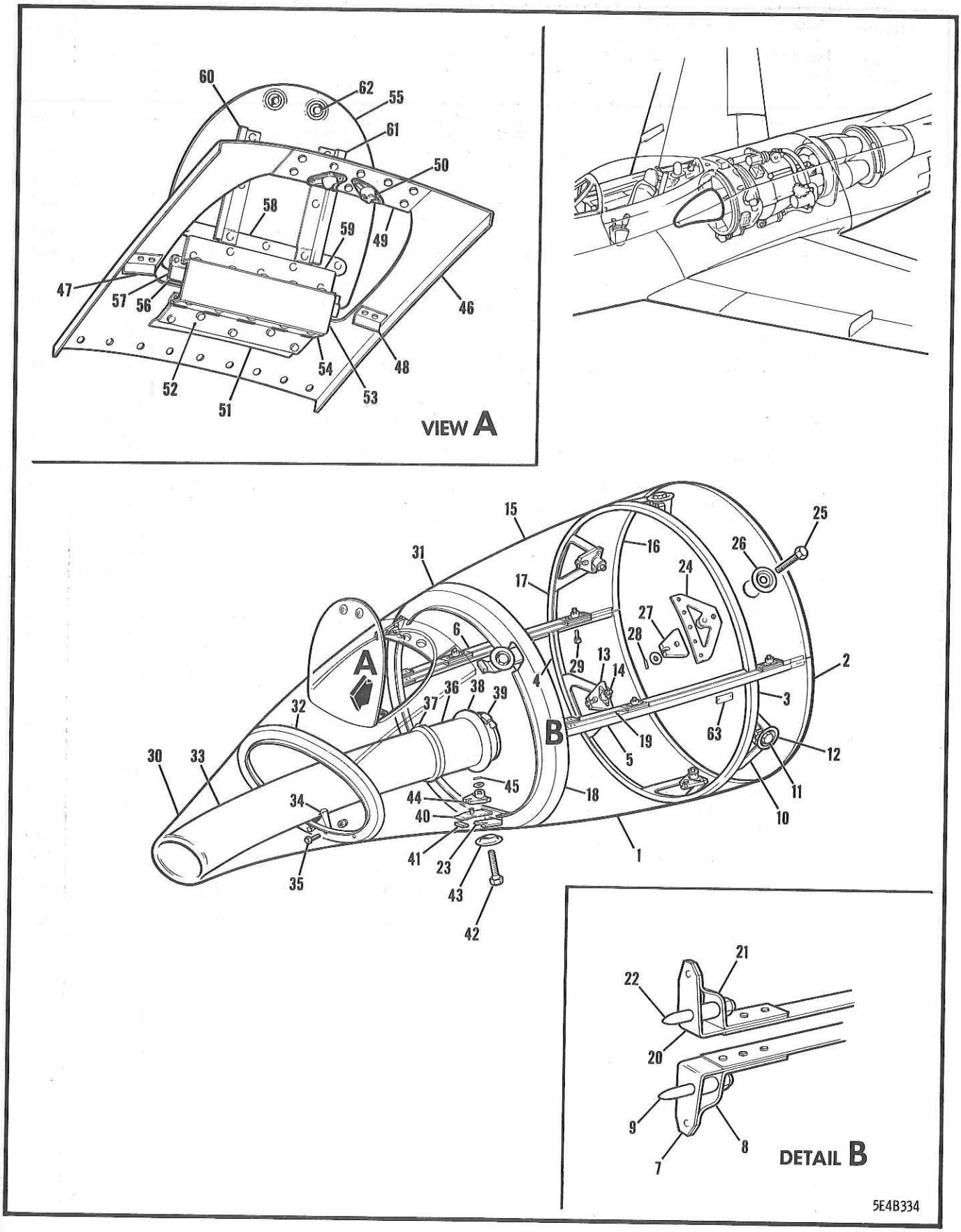

FIGURE 108 ENGINE NOSE FAIRING

FIGURE AND INDEX NUMBER	GROUP POWER PLANT MAJOR ASSEMBLY ENGINE NOSE FAIRING PART NUMBER	1234567 NOMENCLATURE	CODE	UNITS PER ASSY
108 -	13A-62002-808	FAIRING ASSY - ENGINE NOSE (SEE FIG. 102 & 103) (AS PER EO 05-5E-6B/16)		NP
	13A-62002-133	•SHELL ASSY - ENGINE NOSE FAIRING BOTTOM		1
- 1	13A-62002-23	••SHELL - ENGINE NOSE FAIRING BOTTOM		1
- 2	13A-62002-53	••DOUBLER - FAIRING BOTTOM SHELL STA 185		1
- 3	13A-62002-65	••RING - FAIRING BOTTOM SHELL STA 179		1
- 4	13A-62002-25	••RING - FAIRING BOTTOM SHELL STA 169		1
	13A-62002-33	••ANGLE - (CLIP PLATE RETAINING STA 169)		1
- 5	13A-62002-27	••ANGLE - FAIRING BOTTOM SHELL REINF LH		1
- 6	13A-62002-28	••ANGLE - FAIRING BOTTOM SHELL REINF RH		1
	K13-095-5	••PLATE -		4
- 7	13A-62002-31	••ANGLE - FAIRING BOTTOM SHELL LH		1
	13A-62002-32	••ANGLE - FAIRING BOTTOM SHELL RH		1
- 8	13A-62002-29	••BRACKET - (DOWEL PIN ATTACHING PORT SIDE)		1
	13A-62002-30	••BRACKET - (DOWEL PIN ATTACHING STBD SIDE)		1
- 9	170-42030	••PIN - ENGINE ACCESS COVER DOWEL		2
	4S4-8-16	••SPACER - RIVET (NAA)		2
	AN960D416	••WASHER -		2
	AN365-428	••NUT -		2
	13A-62008	••CLIP - PLATE		1
-10	13A-62004	••PLATE ASSY - COVER BOLT RETAINING CLIP		3
-11	151-42006	••BOLT - ENGINE ACCESS COVER RETAINING		3
-12	151-42012	••WASHER - ACCESS COVER RETAINING BOLT		3
-13	151-42013	••SPACER ASSY - ENGINE ACCESS COVER RTNG		3
-14	13A-62002-80	••PIN - ACCESS COVER RETAINING BOLT		3
	13A-62002-131	•SHELL ASSY - ENGINE NOSE FAIRING TOP		1
-15	13A-62002-125	••SHELL - ENGINE NOSE FAIRING TOP		1
-16	13A-62002-63	••DOUBLER - FAIRING TO SHELL STA 185		1
-17	13A-62002-9	••RING - FAIRING TOP SHELL STA 179		1
-18	13A-62002-921	••RING - FAIRING TOP SHELL STA 169		1
	13A-62002-123	••ANGLE - (CLIP PLATE RETAINING STA 169)		2
-19	13A-62002-13	••ANGLE - FAIRING TOP SHELL REINFORCING LH		1
	13A-62002-14	••ANGLE - FAIRING TO SHELL REINFORCING RH		1
	K13-094-5	••PLATE -		4
	13A-62002-11	••ANGLE - (RING TO ANGLE ATTACHING STA 179)		2
-20	13A-62002-929	••ANGLE - FAIRING TOP SHELL LH		1
	13A-62002-928	••ANGLE - FAIRING TOP SHELL RH		1
-21	13A-62002-927	••BRACKET - (DOWEL PIN ATTACHING PORT SIDE)		1
	13A-62002-926	••BRACKET - (DOWEL PIN ATTACHING STBD SIDE)		1
-22	170-42030	••PIN - ENGINE ACCESS COVER DOWEL		2
	4S4-8-16	••SPACER - RIVET (NAA)		2
	AN960D416	••WASHER -		2
	AN365-428	••NUT -		2
-23	13A-62008	••CLIP - PLATE		2
-24	13A-62004	••PLATE ASSY - COVER BOLT RETAINING CLIP		3
-25	151-42006	••BOLT - ENGINE ACCESS COVER RETAINING		3
-26	151-42012	••WASHER - ACCESS COVER RETAINING BOLT		3
-27	151-42013	••SPACER ASSY - ENGINE ACCESS COVER RTNG		3
-28	13A-62002-80	••PIN - ACCESS COVER RETAINING BOLT		3
-29	AN3-6	•BOLT - (TOP TO BOTTOM SHELL ATTACHING)		4
	13A-62002-129	•SHELL ASSY - ENGINE NOSE FAIRING FORWARD		1
-30	13A-62002-127	••SHELL - ENGINE NOSE FAIRING FORWARD UPPER		1
	13A-62002-57	••SHELL - ENGINE NOSE FAIRING FORWARD LOWER		1
-31	13A-62002-37	••RING - FAIRING FORWARD SHELL STA 169 LH		1
	13A-62002-38	••RING - FAIRING FORWARD SHELL STA 169 RH		1
-32	13A-62002-43	••RING - FAIRING FORWARD SHELL STA 158		1
-33	13A-62002-143	••DUCT ASSY - ENGINE NOSE FAIRING FORWARD	001-746	1
	13A-62002-141	••DUCT ASSY - ENGINE NOSE FAIRING	747-	1
	13A-62007	•••FLANGE - DUCT COUPLING FEMALE	001-746	1

FIGURE AND INDEX NUMBER	GROUP POWER PLANT MAJOR ASSEMBLY ENGINE NOSE FAIRING PART NUMBER	1234567 NOMENCLATURE	CODE	UNITS PER ASSY
108 -34	13A-62002-139	•••BRACKET - AIR DUCT SUPPORTING STA 158		1
-35	AN3-4A	•••BOLT - (BRACKET TO RING ATTACHING)		2
	AN960-10	•••WASHER -		2
	AN364D1032	•••NUT -		2
	13A-62002-849	••DUCT ASSY - ENGINE NOSE FAIRING	001-746	1
-36	13A-62002-79	•••DUCT - ENGINE NOSE FAIRING	001-746	1
	13A-62006	•••FLANGE - DUCT COUPLING MALE	001-746	1
-37	4345-400-S	••COUPLER - ONE-LATCH 2-SEGMENT QUICK (MPC)	001-746	1
-38	151-42019-801	••SEAL - GENERATOR AIR DUCT (AS PER EO 05-5E-6A/197)		1
-39	AN737TW114	••CLAMP - (AS PER EO 05-5E-6A/197)		1
-40	13A-62002-19	••PLATE ASSY - CLIP		1
	13A-62002-919	••PLATE ASSY - CLIP		2
-41	13A-62002-17	••BLOCK - PACKING		3
-42	151-42006	••BOLT - ENGINE ACCESS COVER RETAINING		3
-43	151-42012	••WASHER - ACCESS COVER RETAINING BOLT		3
-44	151-42013	••SPACER ASSY - ENGINE ACC COVER RETAINING		3
-45	13A-62002-80	••PIN - ACCESS COVER RETAINING BOLT		3
-46	13A-62002-7	•DOUBLER - (NOSE FAIRING ACCESS DOOR)		1
-47	13A-62002-97	•ANGLE - (NOSE FAIRING ACCESS DOOR DOUBLER REINFORCING) (AS PER EO 05-5E-6A/93)		1
-48	13A-62002-98	•ANGLE - (NOSE FAIRING ACCESS DOOR DOUBLER REINFORCING) (AS PER EO 05-5E-6A/93)		1
	13A-62013	•DOUBLER ASSY - NOSE FAIRING DOOR (AS PER EO 05-5E-6A/93)		1
-49	13A-62014	••DOUBLER - NOSE FAIRING DOOR		1
	13A-62015	••DOUBLER - NOSE FAIRING DOOR		1
-50	214-16	••RECEPTACLE - PLAIN RIVET HOLE (CFC)		2
-51	13A-62002-94	•FORMER - (NOSE FAIRING ACCESS DOOR)		1
-52	MS20001PY6-450	•HALF-HINGE - STRUCTURAL EXTRUDED		1
	K13-017-2	•ANGLE ASSY - (ENGINE NOSE FAIRING DOOR) (AS PER EO 05-5E-6A/93)	001-300	2
	13A-62002-86	•CHANNEL ASSY - (ENGINE NOSE FAIRING DOOR)	301-	1
-53	K13-017-4	••ANGLE - (ENGINE NOSE FAIRING DOOR) (AS PER EO 05-5E-6A/93)	001-300	1
	13A-62002-88	••CHANNEL - (ENGINE NOSE FAIRING DOOR)	301-	1
-54	MS20001PY4-450	••HALF-HINGE - STRUCTURAL EXTRUDED		1
	13A-62012	•DOOR ASSY - NOSE FAIRING ACCESS (AS PER EO 05-5E-6A/93)		1
-55	13A-62012-4	••DOOR - NOSE FAIRING ACCESS		1
-56	13A-62012-12	••PAD - NOSE FAIRING ACCESS DOOR		1
-57	13A-62012-10	••DOUBLER - NOSE FAIRING ACCESS DOOR		1
-58	13A-62012-2	••CHANNEL - NOSE FAIRING ACCESS DOOR		1
-59	MS20001PY6-450	••HALF-HINGE - STRUCTURAL EXTRUDED		1
-60	13A-62012-8	••ZED - NOSE FAIRING ACC DOOR REINFORCING		1
-61	13A-62012-9	••ZED - NOSE FAIRING ACC DOOR REINFORCING		1
-62	4002-2	••STUD - SLOTTED HEAD (CFC)		2
	R4G	••SNAP-RING - GROMMET (CFC)		2
	4002-G	••GROMMET - FLUSH (CFC)		2
	K13-040-8	•HINGE-PIN - (AS PER EO 05-5E-6A/93)	001-300	2
	K13-040-8	•HINGE-PIN - (AS PER EO 05-5E-6A/93)	301-610	1
	13A-62002-85	•PIN - (ENGINE NOSE FAIRING DOOR HINGE)	301-610	1
	13A-62002-85	•PIN - (ENGINE NOSE FAIRING DOOR HINGE)	611-	2
-63	161-42026-801	•DECALCOMANIA - ACC COVER ATT BOLT TORQUE		1

-000-

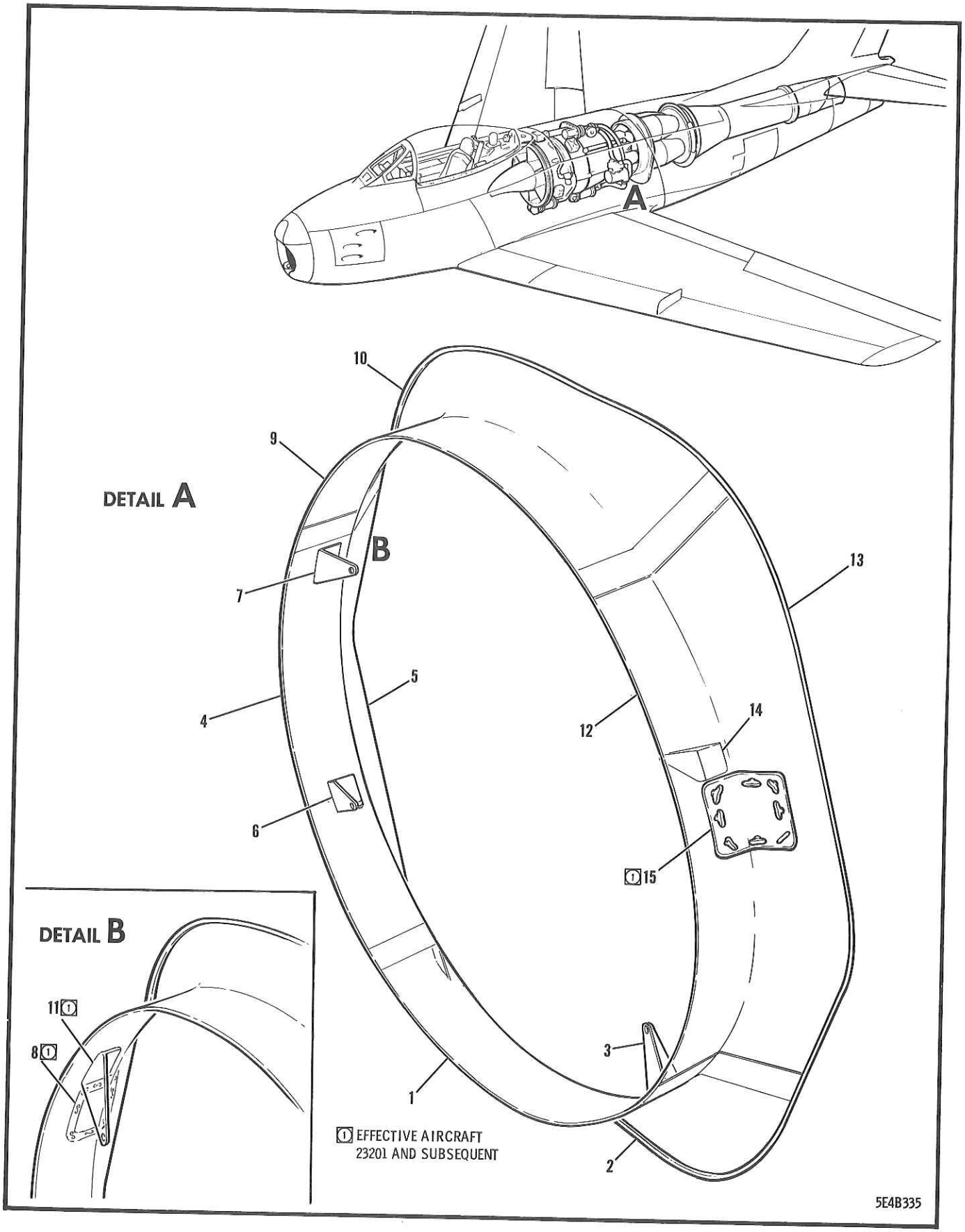

FIGURE 109 ENGINE FIREWALL

FIGURE AND INDEX NUMBER	GROUP POWER PLANT MAJOR ASSEMBLY ENGINE FIREWALL PART NUMBER	1234567 NOMENCLATURE	CODE	UNITS PER ASSY
109 -	13A-32071-5	FIREWALL ASSY - ORENDA ENGINE LOWER (SEE FIG. 102)	001-200	1
	13A-32071-805	FIREWALL ASSY - ORENDA ENGINE LOWER (SEE FIG. 103)	201-	1
- 1	13A-32071-21	•SHEET - LOWER FIREWALL PORT (INNER)		1
- 2	13A-32071-9	•SHEET - LOWER FIREWALL PORT (OUTER)		1
- 3	13A-32071-47	•BRACKET - (LOWER FIREWALL ATTACHING)		1
	NAS221-5	•SCREW - (BRACKET ATTACHING)		3
	AN960-10	•WASHER -		1
	AN363-1032	•NUT -		1
- 4	13A-32071-19	•SHEET - LOWER FIREWALL STARBOARD (INNER)	001-200	1
	13A-32071-63	•SHEET - LOWER FIREWALL STARBOARD (INNER)	201-	1
- 5	13A-32071-7	•SHEET - LOWER FIREWALL STARBOARD (OUTER)	001-200	1
	13A-32071-53	•SHEET - LOWER FIREWALL STARBOARD (OUTER)	201-	1
- 6	13A-32071-43	•BRACKET - (LOWER FIREWALL ATTACHING)		1
	NAS221-5	•SCREW - (BRACKET ATTACHING)		3
	AN960-10	•WASHER -		3
	AN363-1032	•NUT -		3
- 7	13A-32071-45	•BRACKET - (LOWER FIREWALL ATTACHING)	001-200	1
	NAS221-5	•SCREW -	001-200	3
	AN960-10	•WASHER -		3
	AN363-1032	•NUT -	001-200	3
	13A-32071-70	•DOOR ASSY - ENGINE FIREWALL (STBD UPPER)	201-	1
- 8	13A-32071-72	••DOOR - ENGINE FIREWALL (STARBOARD UPPER)	201-	1
	13A-32071-74	••GASKET - ENGINE FIREWALL (STARBOARD)	201-	1
	GA4-250	••GROMMET - FASTENER (DFC)	201-	8
	AJW4-40	••FASTENER - WING TYPE (DFC)	201-	8
	S4-225	•SPRING - FASTENER (DFC)	201-	8
	13A-32071-3	FIREWALL ASSY - ORENDA ENGINE UPPER (SEE FIG. 102)	001-200	1
	13A-32071-803	FIREWALL ASSY - ORENDA ENGINE UPPER (SEE FIG. 103)	201-	1
- 9	13A-32071-17	•SHEET - UPPER FIREWALL STARBOARD (INNER)	001-200	1
	13A-32071-61	•SHEET - UPPER FIREWALL STARBOARD (INNER)	201-	1
-10	13A-32071-11	•SHEET - UPPER FIREWALL STARBOARD (OUTER)	001-200	1
	13A-32071-55	•SHEET - UPPER FIREWALL STARBOARD (OUTER)	201-	1
-11	13A-32071-68	•BRACKET - (UPPER FIREWALL ATTACHING)	201-	1
	NAS221-6	•SCREW - (BRACKET ATTACHING)	201-	3
	AN960-10L	•WASHER -	201-	3
	AN363-1032	•NUT -	201-	3
-12	13A-32071-15	•SHEET - UPPER FIREWALL PORT (INNER)	001-200	1
	13A-32071-59	•SHEET - UPPER FIREWALL PORT (INNER)	201-	1
-13	13A-32071-13	•SHEET - UPPER FIREWALL PORT (OUTER)	001-200	1
	13A-32071-57	•SHEET - UPPER FIREWALL PORT (OUTER)	201-	1
-14	13A-32071-43	•BRACKET - (UPPER FIREWALL ATTACHING)	001-200	1
	13A-32071-67	•BRACKET - (UPPER FIREWALL ATTACHING)	201-	1
	NAS221-5	•SCREW - (BRACKET ATTACHING)	001-200	3
	NAS221-6	•SCREW - (BRACKET ATTACHING)	201-	3
	AN960-10	•WASHER -	001-200	3
	AN960-10L	•WASHER -	201-	3
	AN363-1032	•NUT -		3
	13A-32071-69	•DOOR ASSY - ENGINE FIREWALL (PORT UPPER)	201-	1
-15	13A-32071-71	••DOOR - ENGINE FIREWALL (PORT SIDE UPPER)	201-	1
	13A-32071-73	••GASKET - ENGINE FIREWALL (PORT UPPER)	201-	1
	GA4-250	••GROMMET - FASTENER (DFC)	201-	8
	AJW4-40	••FASTENER - WING TYPE (DFC)	201-	8
	S4-225	•SPRING - FASTENER (DFC)	201-	8

-000-

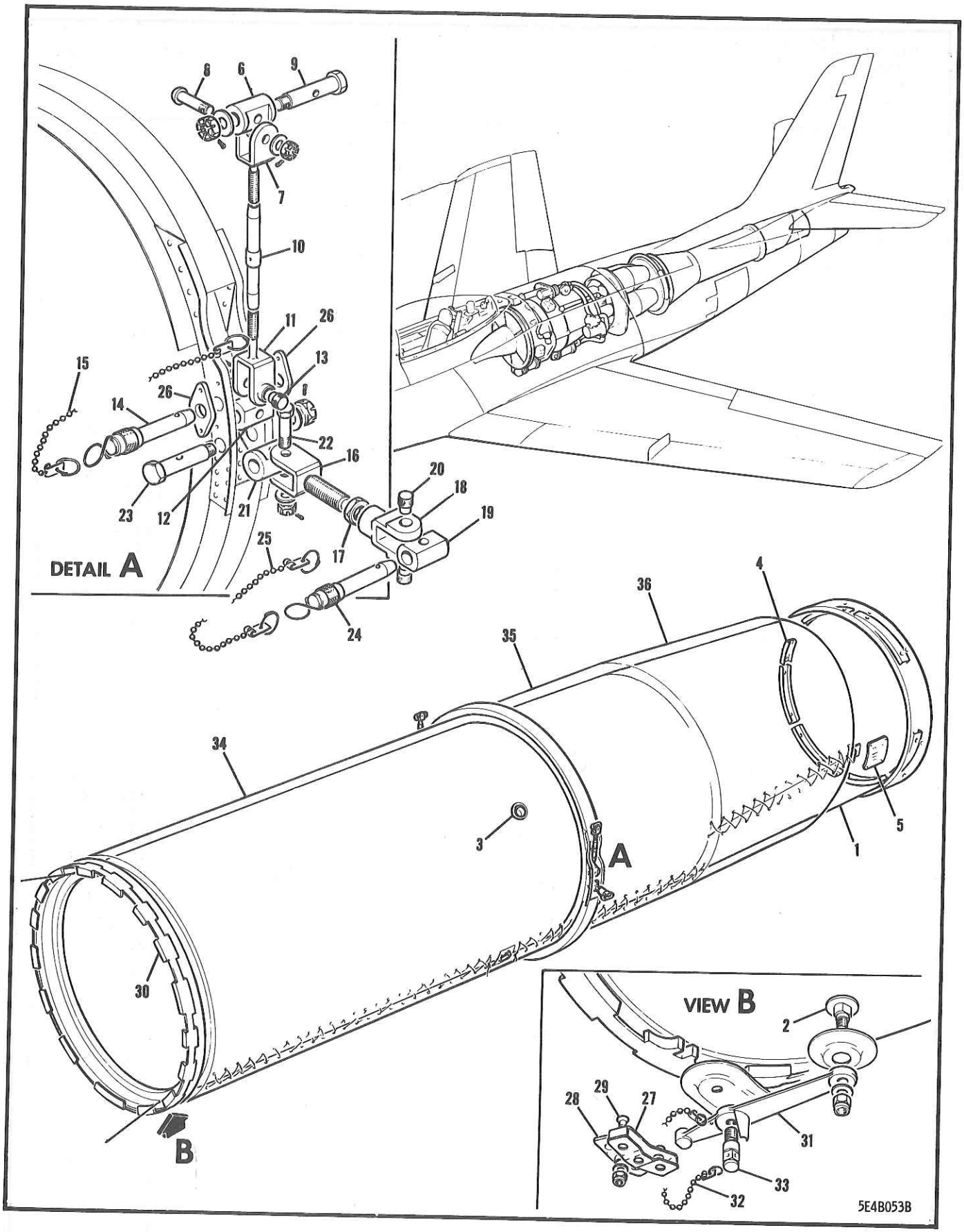

FIGURE 110 ORENDA 10 ENGINE EXHAUST TAIL-PIPE
(EFFECTIVE AIRCRAFT 23001 TO 23370 INCL)

FIGURE AND INDEX NUMBER	GROUP / MAJOR ASSEMBLY / PART NUMBER	POWER PLANT / ORENDA 10 ENGINE EXHAUST TAIL-PIPE / 1234567 NOMENCLATURE	CODE	UNITS PER ASSY
110 -	13A-69009-809	TAIL-PIPE ASSY - ENGINE EXHAUST (ORENDA 10) (SEE FIG. 106) (AS PER EO 05-5E-6A/143)	001-370	1
	13A-69009-813	SPARE PART ASSY FOR 13A-69009-809	001-370	
- 1	13A-69010-807	•TAIL-PIPE ASSY - ENGINE EXHAUST	001-370	1
- 2	13-63021	••PIN - PIVOT	001-370	1
- 3	147-42125	••ADAPTER - EXHAUST PIPE GAS TEMP THERMOC	001-020	4
	191-42013	••ADAPTER ASSY - ENGINE TAIL-PIPE THERMOC	021-370	4
	13A-69024-19	••CLIP - EXHAUST PIPE GAS TEMP THERMOC	001-370	2
- 4	13-63013	••RESTRICTOR - TAIL-PIPE	001-370	1
	13-63014	••RESTRICTOR - TAIL-PIPE	001-370	6
	AN526C428R12	••SCREW -	001-370	14
	0428AF10	••NUT - DURA-LOC 1600 HIGH TEMP (DCI)	001-370	14
- 5	13-63031	••NAME-PLATE - TAIL-PIPE	001-370	1
- 6	13-63015-3	••DISTANCE PIECE - JET-PIPE (UPPER)	001-370	2
- 7	13-63017-4	••FORK - TAIL-PIPE MALE (UPPER) (AS PER EO 05-5E-6A/141)	001-370	2
- 8	AN25-23	••BOLT - (UPPER)	001-370	2
	AN960-516	••WASHER -	001-370	2
	AN320-5	••NUT -	001-370	2
	AN380-2-3	••COTTER-PIN -	001-370	2
- 9	13-63016-3	••AXLE - JET-PIPE ATTACHING (UPPER)	001-370	2
	2W1-25-24-064	••WASHER - PLAIN (NAA)	001-370	2
	AN320-6	••NUT -	001-370	2
	AN380-2-3	••COTTER-PIN -	001-370	2
-10	AN155-80L	••BARREL - (AS PER EO 05-5E-6A/141)	001-370	2
	13B-69052	••FORK ASSY - TAIL-PIPE (AS PER EO 05-5E-6A/141)	001-370	1
-11	13B-69053	•••FORK - TAIL-PIPE MALE	001-370	1
-12	13B-69051	•••DISTANCE PIECE - TAIL-PIPE	001-370	2
-13	13B-69050	•••RETAINER - TAIL-PIPE	001-370	2
	13B-69057	••PIN ASSY - LOCKING (TAIL-PIPE) (AS PER EO 05-5E-6A/141)	001-370	1
-14	13B-69060	•••PIN - TAIL-PIPE FITTING LOCKING	001-370	1
-15	S-1192-1-6	•••CHAIN - BEAD (CAN)	001-370	1
	13B-69059	••FORK ASSY - TAIL-PIPE (AS PER EO 05-5E-6A/141)	001-370	1
-16	13B-69055	•••FORK - TAIL-PIPE MALE	001-370	1
-17	AN316C8R	•••NUT -	001-370	1
-18	13B-69056	•••FORK - TAIL-PIPE FEMALE	001-370	1
-19	13B-69051	•••DISTANCE PIECE - TAIL-PIPE	001-370	2
-20	13B-69050	•••RETAINER - TAIL-PIPE	001-370	1
-21	13-63015-1	••DISTANCE PIECE - TAIL-PIPE (STBD SIDE) (AS PER EO 05-5E-6A/141)	001-370	1
-22	13B-69058	••BOLT - TAIL-PIPE FITTING (AS PER EO 05-5E-6A/141)	001-370	1
	2W17-416	••WASHER - PLAIN (NAA)	001-370	1
	AN320C4	••NUT -	001-370	1
	AN381-2-10	••COTTER-PIN -	001-370	1
-23	13-63016-1	••AXLE - TAIL-PIPE ATTACHING (STBD SIDE)	001-300	1
	2W1-25-24-064	••WASHER - PLAIN (NAA)	301-370	1
	2W17-616	••WASHER - PLAIN (NAA)	301-370	1
	AN320-6	••NUT -	001-370	1
	AN380-2-3	••COTTER-PIN -	001-300	1
	AN381-2-12	••COTTER-PIN -	301-370	1
	13B-69057	••PIN ASSY - LOCKING (TAIL-PIPE) (AS PER EO 05-5E-6A/141)	001-370	1
-24	13B-69060	•••PIN - TAIL-PIPE FITTING LOCKING	001-370	1
-25	S-1192-1-6	•••CHAIN - BEAD (CAN)	001-370	1
-26	13B-69054	••PLATE - TAIL-PIPE(AS PER EO 05-5E-6A/141)	001-370	2

FIGURE AND INDEX NUMBER	GROUP POWER PLANT MAJOR ASSEMBLY ORENDA 10 ENGINE EXHAUST TAIL-PIPE PART NUMBER	1234567 NOMENCLATURE	CODE	UNITS PER ASSY
110 -27	13B-69045-900	••STOP-PLATE ASSY - TAIL-PIPE LOCK (AS PER EO 05-5E-6A/143)	001-370	1
	13B-69047	•••COVER - STOP-PLATE TAIL-PIPE LOCK	001-370	1
	13B-69046-900	•••STOP-PLATE - TAIL-PIPE LOCK	001-370	1
-28	13B-69049	•SHIM - STOP-PLATE TAIL-PIPE LOCK (AS PER EO 05-5E-6A/143)	001-370	1
-29	7S13-1032-10A	•SCREW - 100-DEG FLUSH HEAD CRE (NAA) (AS PER EO 05-5E-6A/143)	001-370	1
	AN960C10L	•WASHER -	001-370	1
	HL1C1032SP	•NUT - SELF-LOCKING HEX (BAN)	001-370	1
-30	13A-69011	•RING - TAIL-PIPE RETAINING	001-370	1
-31	13A-69020-804	•LEVER - TAIL-PIPE (AS PER EO 05-5E-6A/143)	001-370	1
	AN960-416	•WASHER -	001-370	1
	0428AF10	•NUT - DURA-LOC 1600 HIGH TEMP (DCI)	001-370	1
	13-63024-800	•CHAIN ASSY - TAIL-PIPE (AS PER EO 05-5E-6A/143)	001-370	1
-32	9C1-1-5	••CHAIN - BEAD (NAA)	001-370	1
-33	13B-69048	••LOCK-BOLT - TAIL-PIPE STOP-PLATE	001-370	1
-34	13A-69009-1	•BLANKET - TAIL-PIPE FORWARD	001-370	1
-35	13A-69009-3	•BLANKET - TAIL-PIPE INTERMEDIATE	001-370	1
-36	13A-69009-7	•BLANKET - TAIL-PIPE REAR	001-370	1

-000-

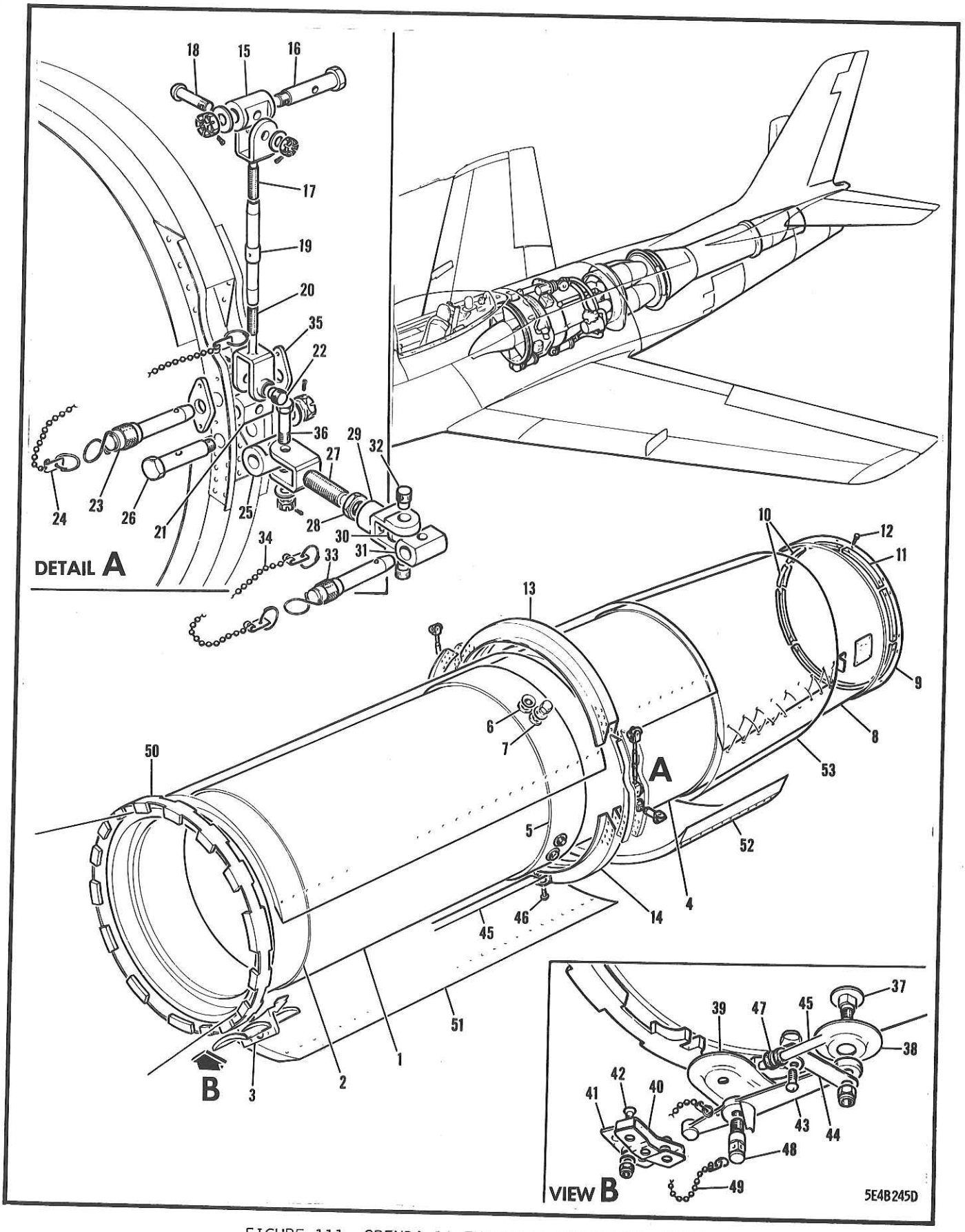

FIGURE 111 ORENDA 14 ENGINE EXHAUST TAIL-PIPE
(EFFECTIVE AIRCRAFT 23371 & SUBS)

FIGURE AND INDEX NUMBER	GROUP POWER PLANT MAJOR ASSEMBLY ORENDA 14 ENGINE EXHAUST TAIL-PIPE PART NUMBER	1234567 NOMENCLATURE	CODE	UNITS PER ASSY
111 -	13B-69009-806	TAIL-PIPE ASSY - ENGINE EXHAUST (ORENDA 14) (SEE FIG. 107) (AS PER EO 05-5E-6A/143)	371-696	1
	13B-69009-808	TAIL-PIPE ASSY - ENGINE EXHAUST (ORENDA 14)	697-719	1
	13B-69009-810	TAIL-PIPE ASSY - ENGINE EXHAUST (ORENDA 14)	720-	1
	13B-69009-908	*SPARE PART ASSY FOR 13B-69009-806 -808 -810	371-	
	13B-69010-808	•TAIL-PIPE ASSY - ORENDA 14 (AS PER EO 05-5E-6A/141)	371-719	1
	13B-69010-810	•TAIL-PIPE ASSY - ORENDA 14	720-	1
	13B-69010-812	•SPARE PART ASSY FOR 13B-69010-808 & -810	371-	
- 1	13B-69010-3	••CYLINDER - TAIL-PIPE (FORWARD)	371-	1
- 2	13B-69010-1	••RING - TAIL-PIPE (FORWARD)	371-	1
- 3	13B-69013	••WELD ASSY - JET-PIPE TEMPERATURE LIMITER DISCONNECT TAIL-PIPE BRACKET (AS PER EO 05-5E-6A/173)	371-	1
	13B-69063-26	••WELD ASSY - JET-PIPE TEMPERATURE LIMITER DISCONNECT TAIL-PIPE BRACKET (AS PER EO 05-5E-6A/173)	371-719	2
	13B-69063	••WELD ASSY - JET-PIPE TEMPERATURE LIMITER DISCONNECT TAIL-PIPE BRACKET	720-	2
	13A-69012	••FLANGE - JET-PIPE FRONT	371-	1
- 4	13B-69010-25	••CYLINDER - TAIL-PIPE (REAR)	371-	1
- 5	13B-69010-23	••RING - TAIL-PIPE ADAPTER	371-610	1
	13B-69010-27	••RING - TAIL-PIPE ADAPTER	611-	1
- 6	191-42014	••ADAPTER - ENGINE TAIL-PIPE THERMOCOUPLE	371-	4
- 7	13B-69040	••ADAPTER - THERMOCOUPLE	371-	4
	13B-69043	••CAP - TAIL-PIPE THERMOCOUPLE BOSS (AS PER EO 05-5E-6B/8)	371-610	4
	13B-69010-19	••LUG - ADAPTER RING	371-	1
- 8	13B-69010-7	••CONE - TAIL-PIPE REAR	371-	1
- 9	13B-69010-15	••RING - TAIL-PIPE REINFORCING (STA 398)	371-	1
-10	13B-69036	••RESTRICTOR - TAIL-PIPE	371-	2
-11	13B-69035	••RESTRICTOR - TAIL-PIPE	371-	7
-12	AN526C428R12	••SCREW -	371-	18
	0428AF10	••NUT - DURA-LOC 1600 HIGH TEMP (DCI)	371-	18
	13-63031	••NAME-PLATE - TAIL-PIPE	371-	1
-13	13B-69010-9	••RING - SUSPENSION UPPER HALF (STA 352)	371-	1
-14	13B-69010-11	••RING - SUSPENSION LOWER HALF (STA 352)	371-	1
	13B-69038	••ANGLE - JET-PIPE THERMOC HARNESS ATT	371-	1
	13B-69037	••BRACKET - JET-PIPE THERMOCOUPLE HARNESS	371-	5
	13B-69010-13	••PLATE - LH STIFFENER	371-	2
	13B-69010-14	••PLATE - RH STIFFENER	371-	2
-15	13-63015-3	••DISTANCE PIECE - JET-PIPE (UPPER)	371-	2
-16	13-63016-3	••AXLE - JET-PIPE ATTACHING (UPPER)	371-	2
	2W1-25-24-064	••WASHER - PLAIN (NAA)	371-	2
	AN320-6	••NUT -	371-	2
	AN380-2-3	••COTTER-PIN -	371-	2
-17	13-63017-4	••FORK - TAIL-PIPE MALE (UPPER) (AS PER EO 05-5E-6A/141)	371-	2
-18	AN25-23	••BOLT -	371-	2
	AN960-516	••WASHER -	371-	2
	AN320-5	••NUT -	371-	2
	AN380-2-3	••COTTER-PIN -	371-	2
-19	AN155-80L	••BARREL - (AS PER EO 05-5E-6A/141)	371-	2
	13B-69052	••FORK ASSY - TAIL-PIPE (AS PER EO 05-5E-6A/141)	371-	2
-20	13B-69053	•••FORK - TAIL-PIPE	371-	1
-21	13B-69051	•••DISTANCE PIECE - JET-PIPE	371-	1
-22	13B-69050	•••RETAINER - TAIL-PIPE	371-	2
	13B-69057	••PIN ASSY - LOCKING (AS PER EO 05-5E-6A/141)	371-	2

FIGURE AND INDEX NUMBER	GROUP POWER PLANT MAJOR ASSEMBLY ORENDA 14 ENGINE EXHAUST TAIL-PIPE PART NUMBER	1234567 NOMENCLATURE	CODE	UNITS PER ASSY
111 -23	13B-69060	•••PIN - TAIL-PIPE FITTING LOCKING	371-	1
-24	S-1192-1-6	•••CHAIN - BEAD (CAN)	371-	1
-25	13-63015-1	••DISTANCE PIECE - JET-PIPE (STBD SIDE)	371-	2
-26	13-63016-1	••AXLE - JET-PIPE ATTACHING (STBD SIDE)	371-	1
	2W17-616	••WASHER - PLAIN (NAA)	371-	1
	AN320-6	••NUT -	371-	1
	AN381-2-12	••COTTER-PIN -	371-	1
	13B-69059	••FORK ASSY - TAIL-PIPE (AS PER EO 05-5E-6A/141)	371-	1
-27	13B-69055	•••FORK - TAIL-PIPE MALE	371-	1
-28	AN316C8R	•••NUT -	371-	1
-29	13B-69056	•••FORK - TAIL-PIPE FEMALE	371-	1
-30	13B-69061	•••WASHER - TAIL-PIPE FORK	371-	1
-31	13A-69051	•••DISTANCE PIECE - JET-PIPE	371-	1
-32	13B-69050	•••RETAINER - TAIL-PIPE	371-	2
	13B-69057	••PIN ASSY - LOCKING (AS PER EO 05-5E-6A/141)	371-	1
-33	13B-69060	•••PIN - TAIL-PIPE FITTING LOCKING	371-	1
-34	S-1192-1-6	•••CHAIN - BEAD (CAN)	371-	1
-35	13B-69054	••PLATE - TAIL-PIPE(AS PER EO 05-5E-6A/141)	371-	2
-36	13A-69058	••BOLT - TAIL-PIPE FITTING (AS PER EO 05-5E-6A/141)	371-	2
	2W17-416	••WASHER - PLAIN (NAA)	371-	1
	AN320C4	••NUT -	371-	1
	AN381-2-10	••COTTER-PIN -	371-	1
-37	13-63021-3	••PIN - PIVOT	371-590	1
	13-63021-5	••PIN - PIVOT	591-	1
-38	13-63023	••PLATE - PIVOT	371-	1
-39	13-63022	••PLATE - SOLE	371-590	1
	13-63022-800	••PLATE - SOLE	591-	1
-40	13B-69045-900	••STOP-PLATE ASSY - LOCK TAIL-PIPE	D11	1
	13B-69045	••STOP-PLATE ASSY - LOCK TAIL-PIPE	591-662	1
-41	13B-69049	•SHIM - STOP-PLATE LOCK TAIL-PIPE (AS PER EO 05-5E-6A/143)	371-	1
-42	7S13-1032-10A	•SCREW - 100-DEG FLUSH HEAD CRE (NAA) (SHIM TO STOP-PLATE ATTACHING) (AS PER EO 05-5E-6A/143)	371-	1
	AN960C10L	•WASHER -	371-	1
	HL1C1032SP	•NUT - SELF-LOCKING HEX (BAN)	371-	1
-43	13A-69020-804	•LEVER - TAIL-PIPE (AS PER EO 05-5E-6A/143)	371-	1
-44	13B-69041	•ARM - TAIL-PIPE CONDUIT TUBE LINK	371-	1
	AN960-416	•WASHER -	371-	1
	0428AF10	•NUT - DURA-LOC 1600 HIGH TEMP (DCI)	371-	1
-45	13B-69039-800	•TUBE - TAIL-PIPE THERMOC HARNESS SUPPORT	371-	1
-46	AN520C10R14	•SCREW - (AS PER EO 05-5E-6B/8)	371-	1
	13B-69009-12	•SPACER - TAIL-PIPE THERMOC HARNESS TUBE (AS PER EO 05-5E-6B/8)	371-	1
	Z1200-02	•NUT - HEX LIGHT 1200-DEG F (ESN)	371-	1
-47	AN742-6	•CLAMP -	371-	1
	7S14CN1032-10	•BOLT - CORROSION-RESISTANT RD/HD (NAA)	371-	1
	AN310-3	•NUT -	371-	1
	AN380-2-3	•COTTER-PIN -	371-	1
	13-63024	•CHAIN ASSY - TAIL-PIPE (AS PER EO 05-5E-6A/143)	371-	1
-48	13B-69048	••LOCK-BOLT - TAIL-PIPE STOP-PLATE	371-	1
-49	9C1-1-5	••CHAIN - BEAD (NAA)	371-	1
-50	13A-69011	•RING - TAIL-PIPE RETAINING	371-	1
-51	13B-69009-1	•BLANKET - TAIL-PIPE FORWARD	371-610	1
	13B-69009-51	•BLANKET - TAIL-PIPE FORWARD	611-719	1
	13B-69009-61	•BLANKET - TAIL-PIPE FORWARD	720-	1

FIGURE AND INDEX NUMBER	GROUP POWER PLANT MAJOR ASSEMBLY ORENDA 14 ENGINE EXHAUST TAIL-PIPE PART NUMBER	1234567 NOMENCLATURE	CODE	UNITS PER ASSY
111 -52	13B-69009-3	•BLANKET - TAIL-PIPE INTERMEDIATE	371-	1
-53	13B-69009-7	•BLANKET - TAIL-PIPE REAR	371-	1
		-000-		

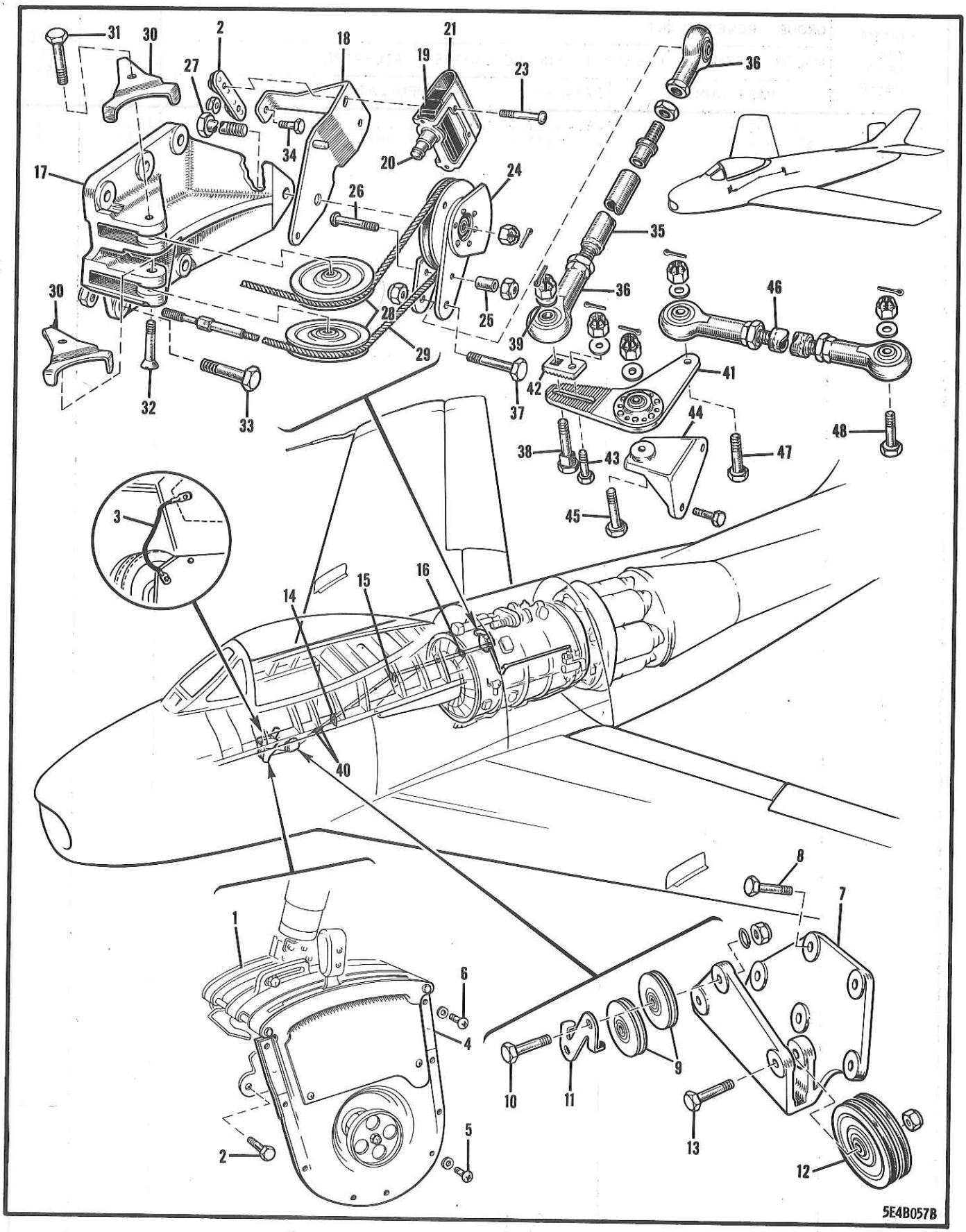

FIGURE 112 ENGINE & THROTTLE CONTROLS

FIGURE AND INDEX NUMBER	GROUP POWER PLANT MAJOR ASSEMBLY ENGINE & THROTTLE CONTROLS PART NUMBER	1234567 NOMENCLATURE	CODE	UNITS PER ASSY
112 -	170-43001	CONTROLS INSTL - ENGINE (SEE FIG. 106 & 107)		NP
- 1	170-43005	•QUADRANT ASSY - ENGINE POWER CONTROL (SEE FIG. 113)		REF
	191-43044-812	•QUADRANT ASSY - ENGINE POWER CONTROL (SEE FIG. 114)		REF
	AN74-4	•BOLT - (QUADRANT ATTACHING)		1
	AN936A4	•WASHER -	101-	1
- 2	AN4-5A	•BOLT - (QUADRANT ATTACHING)		3
- 3	10B1-3-4-5	•JUMPER - BONDING (NAA)	001-100	1
		OR		
	A-Q5R	•JUMPER - STANDARD BONDING (TBC)	001-100	
- 4	151-43041	•COVER-PLATE - ENGINE CONTROL QUADRANT	001-100	1
	AN515-8R8	•SCREW - (QUADRANT COVER-PLATE ATTACHING)	001-100	6
- 5	AN515-10R8	•SCREW - (QUADRANT COVER-PLATE ATTACHING)	001-100	1
	2W1-12-20-32	•WASHER - PLAIN (NAA)	001-100	7
- 6	AN520-10R10	•SCREW - (QUADRANT COVER-PLATE ATTACHING)	001-100	2
	2W1-12-24-32	•WASHER - PLAIN (NAA)	001-100	2
- 7	152-43039	•BRACKET - ENGINE CONTROL STA 97 PULLEY		1
- 8	AN3-5A	•BOLT - (PULLEY BRACKET ATTACHING)		5
	AN365-1032	•NUT -		5
- 9	AN210-1B	•PULLEY -	001-100	2
-10	AN3-11A	•BOLT - (PULLEY & GUARD TO BRACKET ATT)	001-100	2
-11	151-43038	•GUARD - ENGINE CONTROL STA 97 CABLE	001-100	1
	AN960-10	•WASHER -	001-100	2
	AN365-1032	•NUT -	001-100	2
-12	AN210-2B	•PULLEY -		2
-13	AN3-15A	•BOLT - (PULLEY TO BRACKET ATTACHING)		1
	AN365-1032	•NUT -		1
-14	151-43086	•SEAL - ENGINE CTL PRESSURE BULKHEAD CABLE		1
-15	AN210-1B	•PULLEY -		2
	AN3-11A	•BOLT -		1
	AN960-10	•WASHER -		1
	AN365-1032	•NUT -		1
-16	151-43032	•FAIRLEAD - ENGINE CONTROL CABLE STA 178		1
	151-43031	•SEAL - ENGINE CONTROL CABLE STA 178		1
	AN515-6R10	•SCREW -		2
	AN365-632	•NUT -		2
	172-43050	•CLUSTER ASSY - ENGINE CTL FUS STA 190 PUL	001-719	1
	172-43050-800	•CLUSTER ASSY - ENGINE CTL FUS STA 190 PUL	720-	1
-17	172-43049	••BRACKET - ENG CTL PULLEY SUP. FUS STA 190		1
-18	172-43048	••BRACKET ASSY - ENGINE CONTROL LANDING GEAR WARNING SWITCH (STA 190)		1
-19	AN3216-1	••SWITCH - CLASS D LIMIT		1
-20	MD2721	••ACTUATOR - (FIR) (SWITCH)		1
-21	8C4-3	••COVER - SWITCH PROTECTOR (NAA)		1
-22	151-54526	••PLATE ASSY - ENGINE CTL U/SW HOLD-DOWN		1
-23	AN515-6-20	••SCREW - (SWITCH TO BRACKET ATTACHING)		2
-24	151-43107	••PULLEY ASSY - ENGINE CONTROL BELL-CRANK	001-719	1
	151-43107-800	••PULLEY ASSY - ENGINE CONTROL BELL-CRANK	720-	1
	151-43110	•••PULLEY - ENGINE CONTROL BELL-CRANK DRIVE	001-719	1
	151-43110-800	•••PULLEY - ENGINE CONTROL BELL-CRANK DRIVE	720-	1
	151-43111	•••CAM - ENGINE CTL LDG/GR WARNING SW ACTE		1
	AN218-4	•••BEARING -		1
-25	4S4D6-19	••SPACER - RIVET (NAA)	001-719	1
	13B-95016	••SPACER - ENGINE CTL BELL-CRANK ECCENTRIC	720-	1
-26	AN520-1032R18	••SCREW -		1
	AN365-1032	••NUT -		1
-27	AN4-14	••BOLT - (PULLEY TO BRACKET ATTACHING)		1
	AN310-4	••NUT -		1
	AN380-2-3	••COTTER-PIN -		1

FIGURE AND INDEX NUMBER	GROUP POWER PLANT MAJOR ASSEMBLY ENGINE & THROTTLE CONTROLS PART NUMBER	1234567 NOMENCLATURE	CODE	UNITS PER ASSY
112 -28	AN210-2B	••PULLEY -		2
-29	151-43030	••CABLE ASSY - ENGINE CONTROL REAR PULLEY		1
	151-43030-3	•••CABLE - ENGINE CONTROL REAR PULLEY		1
	RA-2487-3	•••TERMINAL - PLAIN BALL SWAGED (ACC)		1
	AN669S3LH	•••TERMINAL -		2
-30	172-43047	••GUARD - ENGINE CTL CABLE LWR FUS STA 190		2
-31	AN3-11A	••BOLT - (GUARD TO BRACKET ATTACHING)		1
-32	AN509-10R17	••SCREW - (GUARD TO BRACKET ATTACHING)		1
	AN960-10L	••WASHER -		AR
	AN365-1032	••NUT -		2
-33	AN3-7A	•BOLT - (BRACKET ATTACHING)		5
-34	AN3-4A	•BOLT -		1
	AN365-1032	•NUT -		6
	13-62028-11	•ROD ASSY - THROTTLE CONTROL	001-430	1
	13-62028-1	•ROD ASSY - THROTTLE CONTROL	431-	1
-35	13-62028-15	••ROD - THROTTLE CONTROL	001-430	1
	13-62028-5	••ROD - THROTTLE CONTROL	431-	1
	AN490HT15	••END -	001-430	2
	AN490HT9	••END -	431-	2
	AN535-0-2	••SCREW -		2
	AN316-5	••NUT -		2
-36	RE4F5	••ROD-END - DOUBLE-ROW SELF-ALIGNING BEARING (FBC)		2
-37	AN4-12A	•BOLT - (ROD TO PULLEY ATTACHING)		1
	AN365-428	•NUT -		1
-38	13-62027	•BOLT - THROTTLE CONTROL		1
-39	2W1-16-32-020	•WASHER - PLAIN (NAA)		1
	AN310-4	•NUT -		1
	AN380-2-3	•COTTER-PIN -		1
-40	AN155-16S	•BARREL -		2
	13A-95004	CONTROL INSTL - ENG THROTTLE (SEE FIG. 102)	001-370	NP
	13A-95005	•BELL-CRANK ASSY - THROTTLE CONTROL	001-370	1
-41	13A-95005-3	••LEVER - BELL-CRANK	001-370	1
	AN218P4	••BEARING -	001-370	1
-42	13-62026	••PLATE - SERRATED THROTTLE CONTROL	001-370	1
-43	AN3-5	••BOLT - (PLATE TO LEVER ATTACHING)	001-370	1
	AN960-10L	••WASHER -	001-370	1
	AN310-3	••NUT -	001-370	1
	AN380-2-3	••COTTER-PIN -	001-370	1
-44	13-62029	•BRACKET - THROTTLE CONTROL	001-370	1
-45	AN4-13	•BOLT - (LEVER TO BRACKET ATTACHING)	001-370	1
	AN960-416L	•WASHER -	001-370	1
	AN310-4	•NUT -	001-370	1
	AN380-2-3	•COTTER-PIN -	001-370	1
	13-62028-9	•ROD ASSY - THROTTLE CONTROL	001-370	1
-46	13-62028-13	••ROD - THROTTLE CONTROL	001-370	1
	AN490HT15	••END -	001-370	1
	AN535-0-2	••SCREW -	001-370	2
	AN316-5	••NUT -	001-370	2
	RE4F5	••ROD-END - DOUBLE-ROW SELF-ALIGNING BEARING (FBC)	001-370	2
-47	AN4-11	•BOLT - (ROD TO BELL-CRANK LEVER ATTACHING)	001-370	1
-48	AN4-12	•BOLT - (ROD TO BELL-CRANK ATTACHING)	001-370	1
	2W1-16-32-020	•WASHER - PLAIN (NAA)	001-370	2
	AN310-4	•NUT -	001-370	2
	AN380-2-3	•COTTER-PIN -	001-370	2

-000-

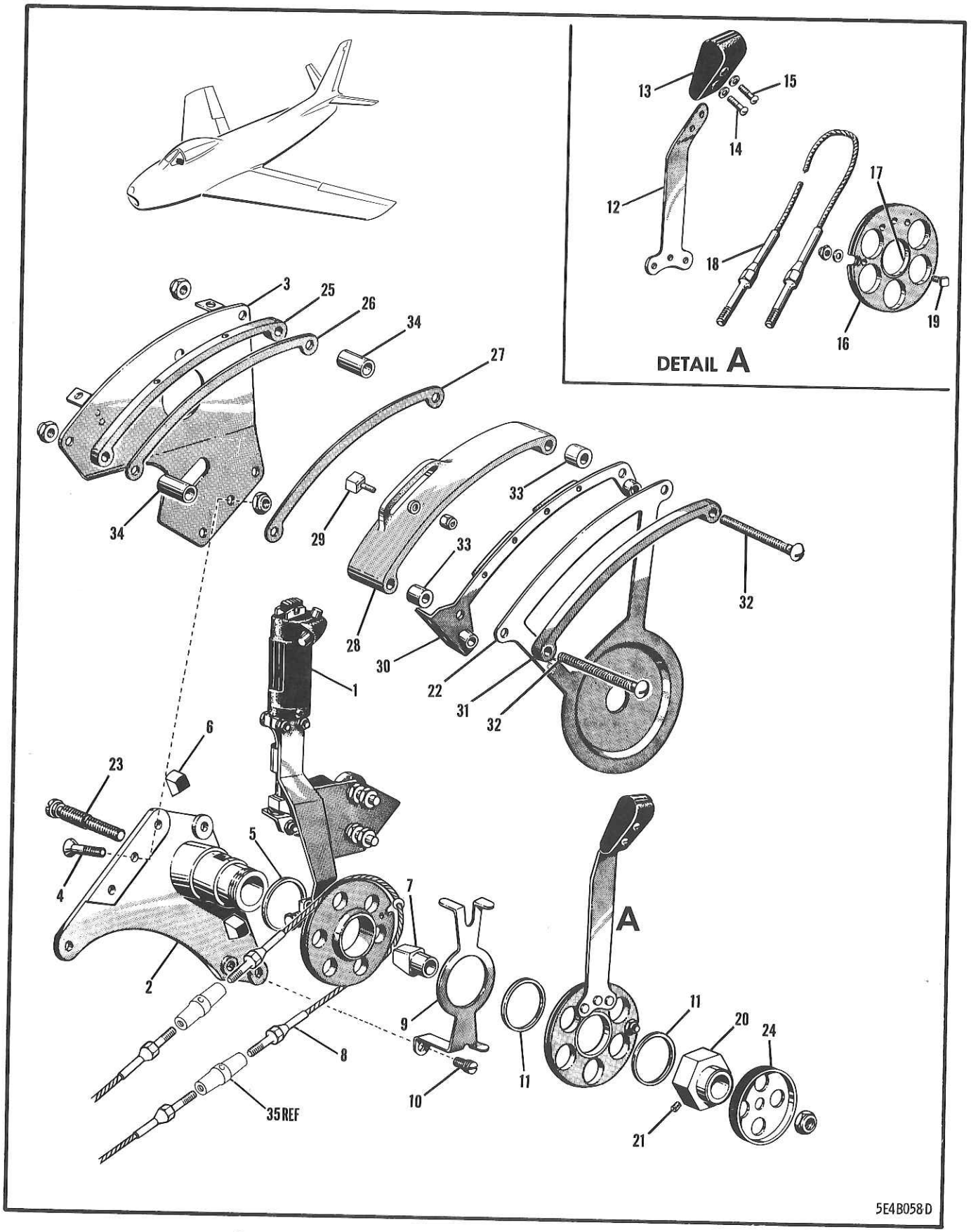

FIGURE 113 ENGINE POWER CONTROL QUADRANT
(EFFECTIVE AIRCRAFT 23001 TO 23100 INCL)

FIGURE AND INDEX NUMBER	GROUP POWER PLANT MAJOR ASSEMBLY ENGINE POWER CONTROL QUADRANT PART NUMBER	1234567 NOMENCLATURE	CODE	UNITS PER ASSY
113 -	170-43005	QUADRANT ASSY - ENGINE POWER CONTROL (SEE FIG. 112) (FOR UPPER CODE SEE FIG. 114)	001-100	1
- 1	170-43059	•LEVER ASSY - ENGINE PWR CTL QUADT THROTTLE (SEE FIG. 115)		REF
- 2	140-43040	•BRACKET - ENGINE CTL QUADRANT SUPPORTING	001-100	1
- 3	151-43054-5	•SUPPORT - ENGINE CONTROL QUADRANT SPACER	001-100	1
- 4	NAS205-10	•SCREW - (SUPPORT TO BRACKET ATTACHING)	001-100	3
	AN365-1032	•NUT -	001-100	3
- 5	140-43041	•SPACER - ENGINE CTL QUADT THROTTLE LEVER	001-100	1
- 6	140-43052	•BLOCK - ENGINE CTL QUADT THROT LEVER FRIC	001-100	2
- 7	140-43051	•WEDGE - ENGINE CTL QUADT THROT LEVER FRIC	001-100	1
- 8	151-43057	•CABLE ASSY - ENGINE QUADRANT PWR/CTL LEVER	001-100	1
	151-43057-3	••CABLE - ENGINE QUADT POWER CONTROL LEVER	001-100	1
	RA-2487-3	••TERMINAL - PLAIN BALL SWAGED (ACC)	001-100	1
	AN669S3RH	••TERMINAL -	001-100	2
- 9	151-43044	•GUARD - ENGINE POWER CTL QUADRANT CABLE	001-100	1
-10	AN503-8-4	•SCREW - (GUARD TO BRACKET ATTACHING)	001-100	1
-11	140-43045	•SPACER - ENGINE CTL QUADRANT FLAP LEVER	001-100	2
	151-43045	•LEVER ASSY - ENGINE CONTROL QUADRANT FLAP	001-100	1
-12	151-43046	••LEVER - ENGINE CONTROL QUADRANT FLAP	001-100	1
-13	151-43047	••KNOB - ENGINE CONTROL QUADRANT FLAP LEVER	001-100	1
-14	AN515-6R7	••SCREW - (KNOB TO LEVER ATTACHING)	001-100	1
-15	AN515-6R8	••SCREW - (KNOB TO LEVER ATTACHING)	001-100	1
	AN935-6	••WASHER -	001-100	2
	140-43046-5	••PULLEY ASSY - ENGINE CTL QUADT FLAP LEVER	001-100	1
-16	140-43046-7	•••PULLEY - ENGINE CTL QUADRANT FLAP LEVER	001-100	1
-17	140-43047	•••BEARING - ENG CTL QUADT FLAP LEVER PUL	001-100	1
-18	151-43079-5	••CABLE ASSY - ENGINE CTL QUADT FLAP LEVER	001-100	1
	151-43079-3	•••CABLE - ENGINE CTL QUADRANT FLAP LEVER	001-100	1
	AN669S3RH	•••TERMINAL -	001-100	2
-19	151-43049	••STUD - CONTROL CABLE LOCKING	001-100	1
	AN960-10	••WASHER -	001-100	1
	AN365-1032	••NUT -	001-100	1
-20	151-43048	•NUT - ENGINE CTL QUADT FLAP LEVER FRICTION	001-100	1
-21	AN565B6-3	•SCREW - (FRICTION NUT RETAINING)	001-100	1
-22	151-43040	•FRAME - ENGINE CONTROL QUADRANT INBOARD	001-100	1
-23	140-43050	•SHAFT - ENGINE CONTROL QUADRANT	001-100	1
	AN316-4R	•NUT -	001-100	1
-24	140-43049	•KNOB - ENGINE CONTROL QUADRANT THROTTLE LEVER FRICTION	001-100	1
	AN364-428	•NUT -	001-100	1
-25	151-43069-7	•SPACER - ENGINE CONTROL QUADRANT	001-100	1
-26	151-43068	•STRIP - ENGINE CONTROL QUADRANT RUBBING	001-100	1
-27	151-43095	•STRIP ASSY - ENGINE CTL QUADT THROT RUB.	001-100	1
-28	191-43019-800	•SPACER - ENGINE CTL QUADT THROTTLE LEVER (AS PER EO 05-5E-6A/132)	001-100	1
-29	172-43080-802	•STOP - ENGINE CONTROL QUADRANT IDLE (AS PER EO 05-5E-6A/132)	001-100	1
	13B-95015	•WASHER - ENGINE CONTROL QUADRANT SERRATED (AS PER EO 05-5E-6A/58)	001-100	1
	AN364-1032	•NUT -	001-100	1
-30	151-43043	•RACK ASSY - ENGINE CTL QUADRANT FLAP LEVER	001-100	1
-31	151-43069-5	•SPACER - ENGINE CONTROL QUADRANT	001-100	1
-32	NAS221-62	•SCREW - (QUADRANT ASSEMBLING) OR	001-100	2
	AN23-62A	•BOLT - (QUADRANT ASSEMBLING)	001-100	
-33	NAS43DD3-18	•SPACER -	001-100	2
-34	NAS43DD3-54	•SPACER -	001-100	2
	AN365-1032	•NUT -	001-100	2
113 -35	151-43030	CABLE ASSY - ENGINE CONTROL REAR PULLEY (SEE FIG. 112)		REF

-000-

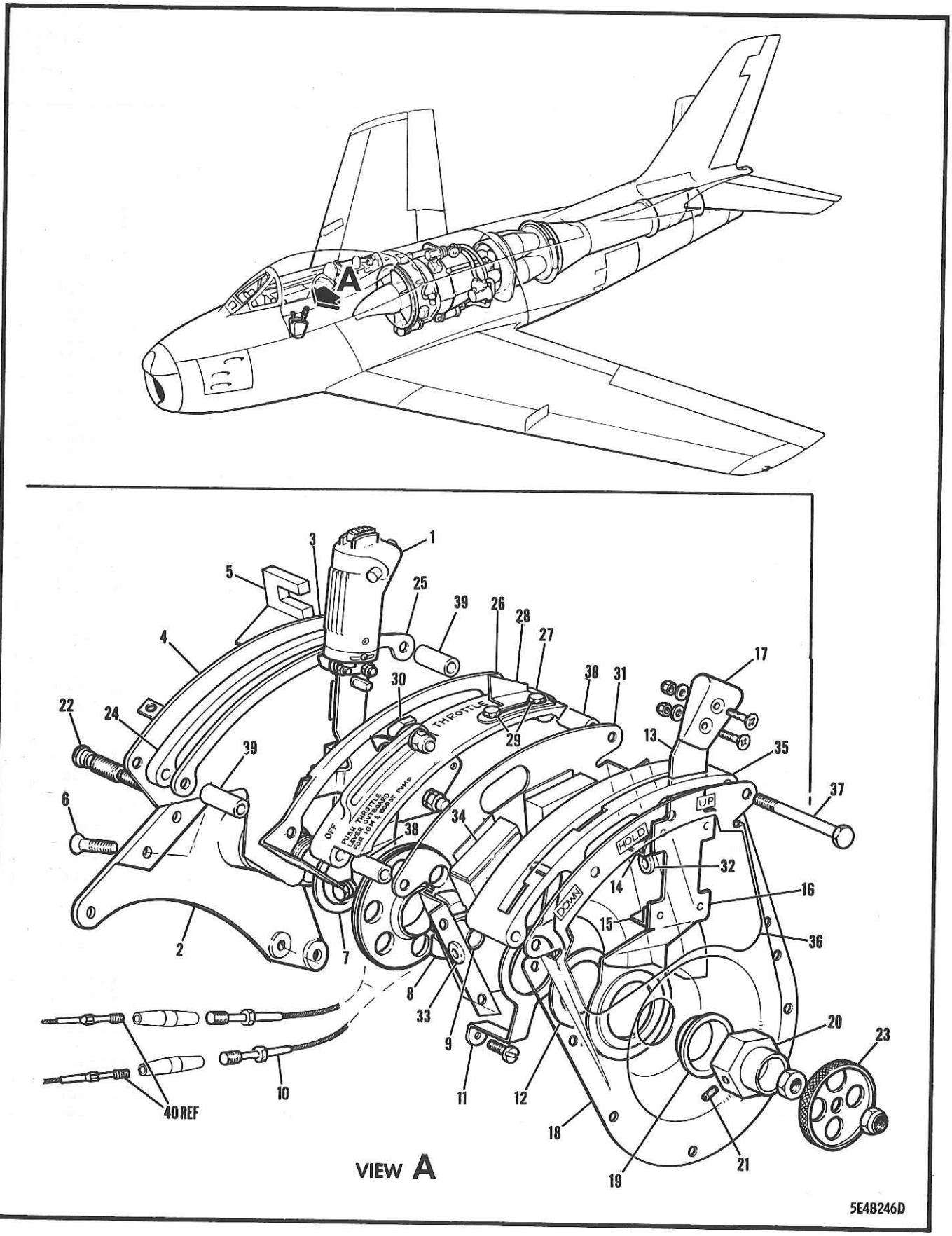

FIGURE 114 ENGINE POWER CONTROL QUADRANT
(EFFECTIVE AIRCRAFT 23101 & SUBS)

FIGURE AND INDEX NUMBER	GROUP POWER PLANT MAJOR ASSEMBLY ENGINE POWER CONTROL QUADRANT PART NUMBER	1234567 NOMENCLATURE	CODE	UNITS PER ASSY
114 -	191-43044-812	QUADRANT ASSY - ENGINE CONTROL THROTTLE (SEE FIG. 112) (AS PER EO 05-5E-6A/122)	101-	1
- 1	172-43069-3	•LEVER ASSY - ENGINE POWER CONTROL THROTTLE (SEE FIG. 116)		REF
- 2	140-43040	•BRACKET - ENGINE CTL QUADRANT SUPPORTING	101-	1
- 3	151-43054-5	•SUPPORT - ENGINE CONTROL QUADRANT TRACER	101-370	1
- 4	151-43054-805	•SUPPORT - ENGINE CONTROL QUADRANT TRACER	371-	1
- 5	13B-95010	•GATE ASSY - ENGINE CONTROL QUADRANT	371-	1
	AN3-3A	•BOLT - (GATE TO SUPPORT ATTACHING)	371-	1
	AN960-10L	•WASHER -	371-	1
	AN364-1032	•NUT -	371-	1
- 6	NAS205-10	•SCREW - (SUPPORT TO BRACKET ATTACHING)	101-	3
	AN365-1032	•NUT -	101-	3
- 7	140-43041	•SPACER - ENGINE CTL QUADT THROTTLE LEVER	101-	1
- 8	140-43052	•BLOCK - ENGINE CTL QUADT THROT LEVER FRIC	101-	2
- 9	140-43051	•WEDGE - ENGINE CTL QUADT THROT LEVER FRIC	101-	1
-10	151-43057	•CABLE ASSY - ENGINE QUADRANT PWR/CTL LEVER	101-	1
	151-43057-3	••CABLE - ENGINE CTL QUADT POWER CTL LEVER	101-	1
	RA-2487-3	••TERMINAL - PLAIN BALL SWAGED (ACC)	101-	1
	AN669S3RH	••TERMINAL -	101-	2
-11	191-43017	•GUARD - ENGINE CTL THROTTLE QUADRANT CABLE	101-	1
	AN503-8-4	•SCREW - (GUARD ATTACHING)	101-	1
-12	191-43022	•BEARING - ENGINE CONTROL THROTTLE QUADT	101-	1
-13	191-43011-820	•LEVER ASSY - ENGINE CTL THROT QUADT FLAP (AS PER EO 05-5E-6A/122)	101-	1
	191-43021	••BEARING - ENG CTL THROT QUADT FLAP LEVER	101-	1
-14	191-43011-803	••ANGLE - ENGINE CTL THROT QUADT FLAP LEVER	101-	1
-15	191-43011-805	••ANGLE - ENGINE CTL THROT QUADT FLAP LEVER	101-	1
-16	191-43011-811	••ARM - ENGINE CTL THROT QUADT FLAP LEVER	101-	1
-17	191-43024	•KNOB - ENGINE CONTROL QUADRANT FLAP LEVER (AS PER EO 05-5E-6A/60)	101-	1
	AN507-632R5	•SCREW - (KNOB TO LEVER ATTACHING) (AS PER EO 05-5E-6A/60)	101-	2
	AN935-6	•WASHER -	101-	2
	AN340-6	•NUT -	101-	2
-18	191-43038	•COVER-PLATE ASSY - ENGINE CTL THROT QUADT	101-	1
	AN530-4-4	•SCREW -	101-	2
-19	191-43015	•SLEEVE - ENGINE CTL THROT QUADT FLAP LEVER	101-	1
-20	151-43048	•NUT - ENGINE CTL QUADT FLAP LEVER FRICTION	101-	1
-21	AN565B6-3	•SCREW - (FRICTION NUT RETAINING)	101-	1
-22	140-43050	•SHAFT - ENGINE CONTROL QUADRANT	101-	1
	AN316-4R	•NUT -	101-	1
-23	191-43037	•KNOB - ENGINE CTL QUADT THROT LEVER FRIC	101-	1
	AN364-428	•NUT -	101-	1
-24	191-43032	•SPACER - ENGINE CONTROL QUADRANT	101-	1
-25	151-43068	•STRIP - ENGINE CONTROL QUADRANT RUBBING	101-	1
-26	191-43033	•STRIP ASSY - ENGINE CTL THROT QUADT RUB.	101-	1
-27	191-43019-800	•SPACER ASSY - ENGINE CTL THROT QUADT LEVER (MAKE FROM 191-43019 SPACER) (AS PER EO 05-5E-6A/132)	101-	1
-28	13B-95011	••STOP - ENGINE PWR CTL HANDLE NORMAL POSN	101-	1
-29	AN3H3A	••BOLT - (STOP TO SPACER ATTACHING)	101-	2
	AN960-10L	••WASHER -	101-	2
-30	172-43080-802	•STOP - ENGINE CONTROL QUADRANT IDLE (AS PER EO 05-5E-6A/132)	101-	1
	13B-95015	•WASHER - ENGINE CONTROL QUADRANT SERRATED (AS PER EO 05-5E-6A/58)	101-	1
	AN364-1032	•NUT -	101-	1
-31	191-43012-810	•FRAME ASSY - ENGINE CONTROL THROTTLE QUADT FLAP SWITCH (AS PER EO 05-5E-6A/122)	101-	1

FIGURE AND INDEX NUMBER	GROUP POWER PLANT MAJOR ASSEMBLY ENGINE POWER CONTROL QUADRANT PART NUMBER	1234567 NOMENCLATURE	CODE	UNITS PER ASSY
114 -	191-43012-807	••FRAME - ENGINE CONTROL THROTTLE QUADRANT FLAP SWITCH	101-	1
	PK79XZ-4-5	•SCREW - PHILLIPS RECESSED TYPE Z SHEET METAL (PKC)	101-	2
-32	191-43044-950	•GROMMET - ELASTIC (MAKE FROM AN931-5-9)	101-	2
-33	AN931-10-14	•GROMMET -	101-	3
-34	170-54075	•ACTUATOR - ELECTRIC WING FLAP SWITCH	101-	4
	WA3S-BT1	•MICROSWITCH - (MSC) (WINTERIZED)	101-	4
	159-48167	•INSULATOR - MICROSWITCH FUEL SEL VALVE CTL	101-	4
	134-43056	•PLATE - ENGINE CONTROL U/SW HOLD-DOWN TAP	101-	4
	AN500A6-16	•SCREW -	101-	8
	AN960D6L	•WASHER -	101-	8
-35	191-43020-950	•SPACER ASSY - ENGINE CTL THROTTLE QUADRANT FLAP LEVER (AS PER EO 05-5E-6A/122)	101-	1
	191-43020-953	••SPACER - (FLAP LEVER)	101-	1
	191-43020-951	••STOP - (FLAP LEVER)	101-	1
-36	191-43036	•DOOR - ENGINE CTL THROT QUADT COVER ACCESS	101-	1
	NAS221-7	•SCREW -	101-	2
-37	AN3-45A	•BOLT - (QUADRANT ASSEMBLING)	101-	2
-38	NAS43DD3-36	•SPACER -	101-	2
-39	NAS43DD3-57	•SPACER - (AS PER EO 05-5E-6A/132)	101-	2
	AN365-1032	•NUT -	101-	2
-40	151-43030	CABLE ASSY - ENGINE CONTROL REAR PULLEY (SEE FIG. 112)		REF

-000-

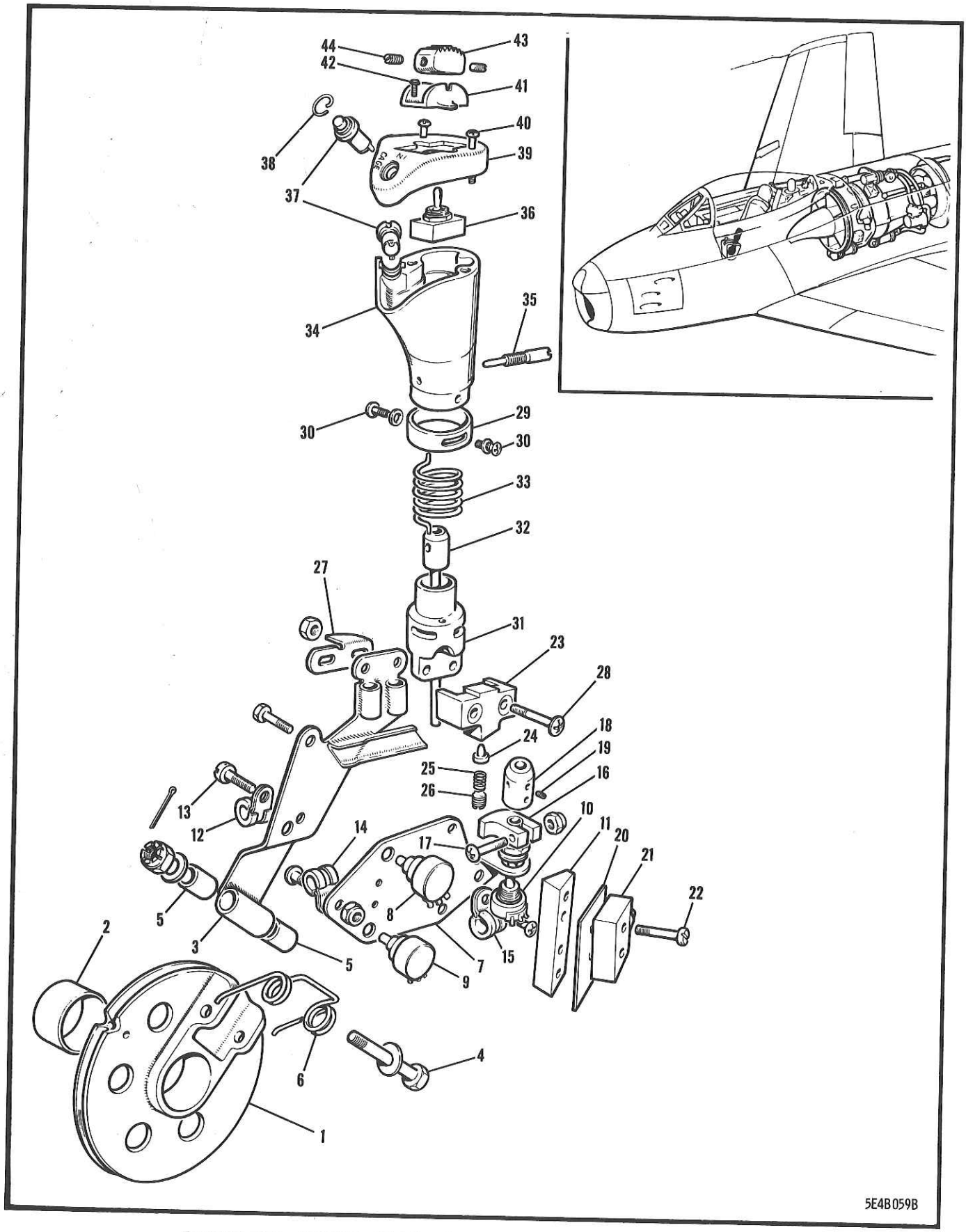

FIGURE 115 ENGINE POWER CONTROL QUADRANT THROTTLE LEVER
(EFFECTIVE AIRCRAFT 23001 TO 23100 INCL)

FIGURE AND INDEX NUMBER	GROUP POWER PLANT MAJOR ASSEMBLY ENGINE POWER CONTROL QUADRANT THROTTLE LEVER PART NUMBER	1234567 NOMENCLATURE	CODE	UNITS PER ASSY
115 -	170-43059	LEVER ASSY - ENGINE POWER CONTROL QUADRANT THROTTLE (SEE FIG. 113) (FOR UPPER CODE SEE FIG. 116)	001-100	1
- 1	151-43042	•PULLEY ASSY - ENGINE CONTROL QUADRANT THROTTLE LEVER	001-100	1
- 2	140-43043	••BEARING - ENGINE CONTROL QUADRANT THROTTLE LEVER PULLEY	001-100	1
- 3	151-43055	•ARM ASSY - ENGINE QUADT THROTTLE LEVER PUL	001-100	1
- 4	AN4-27	•BOLT - (ARM TO PULLEY ATTACHING)	001-100	1
	AN960-416	•WASHER -	001-100	2
- 5	NAS43C4-24	•SPACER -	001-100	2
- 6	151-43058	•SPRING - ENGINE POWER CONTROL QUADRANT THROTTLE LEVER	001-100	1
	AN310-4	•NUT -	001-100	1
	AN380-2-3	•COTTER-PIN -	001-100	1
- 7	161-74038	•BRACKET - ENGINE CONTROL QUADRANT MANUAL RANGE CONTROL RHEOSTAT SUPPORTING	001-100	1
- 8	L9058	•POTENTIOMETER - (CTS)	001-100	1
- 9	A4509A	•POTENTIOMETER - (CTS)	001-100	1
-10	Y4321A	•POTENTIOMETER - (CTS)	001-100	1
	AN960-416L	•WASHER -	001-100	AR
-11	161-74040	•FITTING - ENGINE CONTROL QUADRANT MANUAL RANGE CONTROL SWITCH SUPPORT	001-100	1
-12	AN742D8C	•CLAMP -	001-100	1
-13	AN501A10-8	•SCREW -	001-100	2
-14	AN742D8C	•CLAMP -	001-100	1
	AN515-8R7	•SCREW -	001-100	1
	AN365-832	•NUT -	001-100	1
-15	AN742D6C	•CLAMP -	001-100	1
	AN515-6R7	•SCREW -	001-100	1
	AN365-632	•NUT -	001-100	1
-16	161-74042	•DOG - ENGINE CONTROL QUADRANT MANUAL RANGE CONTROL SWITCH ACTUATING	001-100	1
-17	AN515-8R12	•SCREW -	001-100	1
	AN365-832	•NUT -	001-100	1
-18	161-74043	•COUPLING - ENGINE CONTROL QUADRANT MANUAL RANGE CONTROL DRIVE-SHAFT	001-100	1
-19	AN565A6H3	•SCREW -	001-100	4
-20	159-48167	•INSULATOR - U/SW FUEL SELECTOR VALVE CTL	001-100	1
-21	BZ-3YDT	•SWITCH - SPLIT-CONTACT BASIC (MSC)	001-100	1
-22	AN500A6-16	•SCREW - (SWITCH TO FITTING ATTACHING)	001-100	2
	AN960D6	•WASHER -	001-100	2
-23	151-43064-3	•DETENT - ENGINE POWER CONTROL LEVER	001-100	1
-24	151-43061	•PLUNGER - ENGINE PWR CONTROL LEVER DETENT	001-100	1
-25	151-43062	•SPRING - ENGINE PWR CONTROL LEVER DETENT	001-100	1
-26	COMMERCIAL	•SET-SCREW - 1/4-20 X 1/4	001-100	1
-27	151-43063	•STOP - ENGINE POWER CONTROL LEVER	001-100	1
-28	AN509-416-30	•SCREW - (DETENT & STOP TO ARM & GRIP ATT)	001-100	2
	AN365-428	•NUT -	001-100	2
-29	151-43071	•RING - ENGINE POWER CTL LEVER HANDLE STOP	001-100	1
-30	AN515-6R3	•SCREW - (RING TO GRIP ATTACHING)	001-100	2
	AN936A6	•WASHER -	001-100	2
	151-43117-3	•GRIP ASSY - ENGINE POWER CONTROL LEVER	001-100	1
-31	151-43067	••ADAPTER - ENGINE POWER CTL LEVER HANDLE	001-100	1
-32	161-43201	••DRIVE-SHAFT - ENGINE CONTROL QUADT MANUAL RANGE CONTROL RHEOSTAT	001-100	1
-33	151-43078	••SPRING - ENGINE POWER CONTROL HANDLE	001-100	1
-34	151-43115	••BASE ASSY - ENGINE PWR CONTROL LEVER GRIP	001-100	1
	151-43114	•••INSERT - ENGINE POWER CONTROL LEVER GRIP	001-100	1
	120-43091	•••INSERT - QUADRANT ENGINE PWR CONTROL CAP	001-100	2

FIGURE AND INDEX NUMBER	GROUP POWER PLANT MAJOR ASSEMBLY ENGINE POWER CONTROL QUADRANT THROTTLE LEVER PART NUMBER	1234567 NOMENCLATURE	CODE	UNITS PER ASSY
115 -35	151-43083	••PIN - ENGINE POWER CONTROL LEVER	001-100	1
-36	AN3021-1	••SWITCH - ONE-HOLE MOUNTING SP TOGGLE (SPEEDBRAKE OPERATING)	001-100	1
	2W1AL34-21-64	••WASHER - PLAIN (NAA)	001-100	1
-37	138106	••SWITCH - SNAP (UCI) (MICROPHONE & GYRO GUNSIGHT CAGING)	001-100	2
-38	141-43023	••SPRING - ENGINE THROT MICROSWITCH RTNG	001-100	1
-39	151-43116	••CAP - ENGINE POWER CONTROL LEVER GRIP	001-100	1
-40	AN515-4-12	••SCREW - (CAP TO BASE ATTACHING)	001-100	2
-41	151-43113	••GUIDE - ENGINE POWER CONTROL GRIP SPEEDBRAKE BUTTON	001-100	1
-42	PK54Z-2-5	••SCREW - TYPE Z SHEET METAL SLOTTED (PKC) (GUIDE ATTACHING)	001-100	2
-43	151-43112	••BUTTON - ENGINE POWER CONTROL SPEEDBRAKE TOGGLE SWITCH	001-100	1
-44	AN565B4-3	••SCREW -	001-100	2

-000-

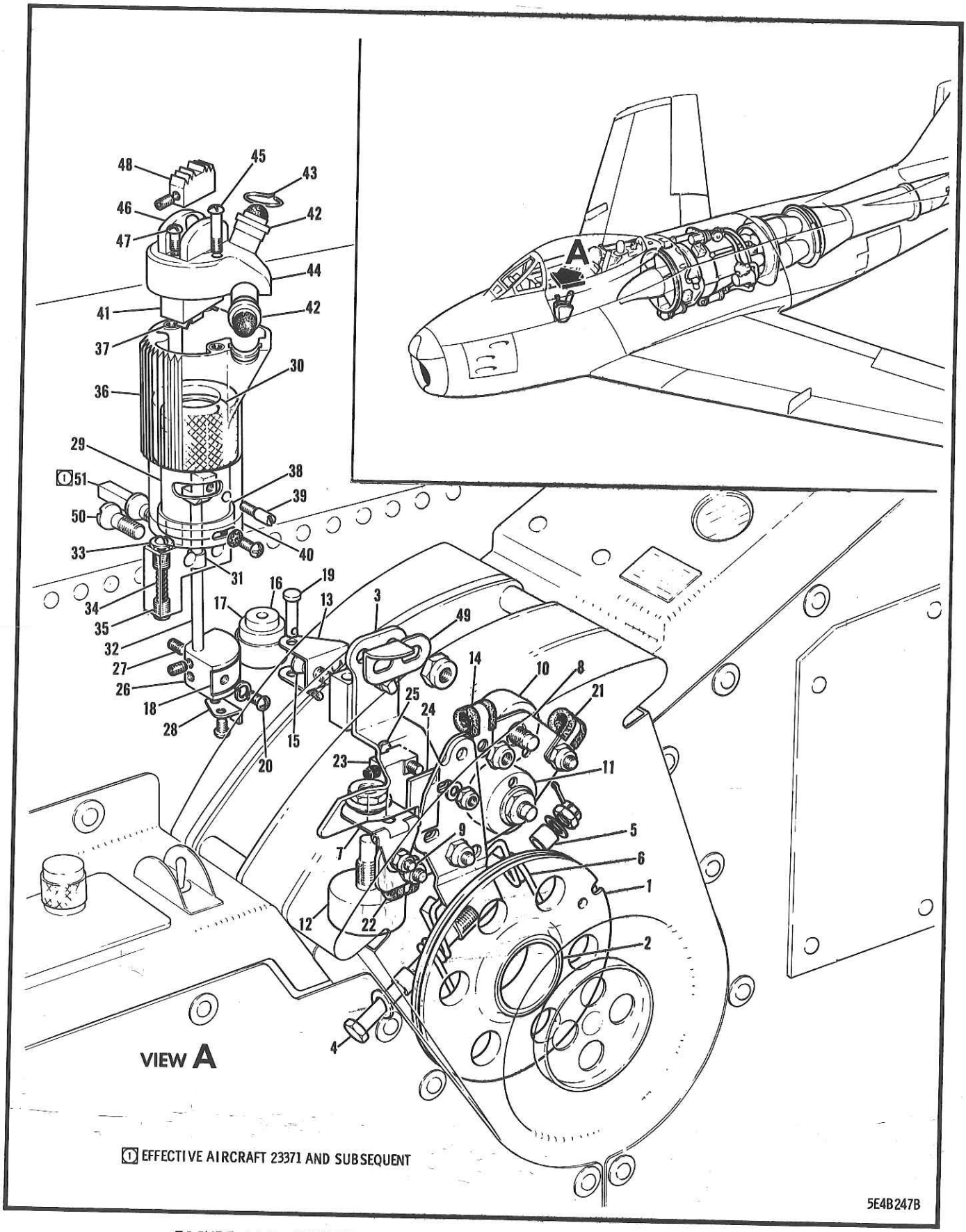

FIGURE 116 ENGINE POWER CONTROL QUADRANT THROTTLE LEVER (EFFECTIVE AIRCRAFT 23101 & SUBS)

FIGURE AND INDEX NUMBER	GROUP POWER PLANT MAJOR ASSEMBLY ENGINE POWER CONTROL QUADRANT THROTTLE LEVER PART NUMBER	1234567 NOMENCLATURE	CODE	UNITS PER ASSY
116 -	172-43069-3	LEVER ASSY - ENGINE POWER CONTROL THROTTLE (SEE FIG. 114) (FOR LOWER CODE SEE FIG. 115)	101-370	1
	172-43069-805	SPARE PARTS ASSY FOR 172-43069-3	101-370	
	172-43069-803	LEVER ASSY - ENGINE POWER CONTROL THROTTLE	371-490	1
	172-43069-813	LEVER ASSY - ENGINE POWER CONTROL THROTTLE	491-	1
- 1	151-43042-800	.PULLEY ASSY - ENGINE CTL QUADT THROT LEVER	101-	1
	151-43042-3	..PULLEY - ENGINE CTL QUADRANT THROT LEVER	101-	1
- 2	140-43043	..BEARING - ENGINE CTL QUADRANT THROT LEVER	101-	1
- 3	191-43039	.ARM ASSY - ENGINE CTL QUADT THROTTLE LEVER	101-	1
- 4	AN174-27	.BOLT - (ARM TO PULLEY ATTACHING)	101-	1
	AN960D416	.WASHER -	101	2
- 5	NAS43C4-24	.SPACER -	101-	2
- 6	151-43058	.SPRING - ENGINE CONTROL QUADT THROT LEVER	101-	1
	AN310-4	.NUT -	101-	1
	AN380-2-3	.COTTER-PIN -	101-	1
	172-43079	.BRACKET ASSY - ENGINE CONTROL QUADRANT RHEOSTAT SUPPORT	101-	1
- 7	172-43086	..BRACKET ASSY - ENGINE POWER CONTROL RHEOSTAT SUPPORT	101	1
- 8	172-43082	..BRACKET - ENGINE POWER CONTROL QUADRANT RHEOSTAT SUPPORT	101-	1
	AN23-8	..BOLT -	101-	1
	AN960D10	..WASHER -	101-	1
	AN320-3	..NUT -	101-	1
	AN380-2-3	..COTTER-PIN -	101-	1
- 9	AN520-10R9	.SCREW -	101-	1
	AN960D10	.WASHER -	101-	1
	AN365-1032	.NUT -	101-	1
-10	L9058	.POTENTIOMETER - (CTS)	101-	1
-11	A4509A	.POTENTIOMETER - (CTS)	101-	1
-12	S2222	.POTENTIOMETER - (CTS)	101-	1
	AN960-416L	.WASHER -	101-	AR
-13	172-43059	.BRACKET - ENGINE CONTROL LEVER SPRING SUP.	101-	1
-14	AN742D8C	.CLAMP -	101-	1
	AN509-10R10	.SCREW -	101-	1
-15	AN509-10R9	.SCREW -	101-	1
	AN960D10	.WASHER -	101-	3
	AN365-1032	.NUT -	101-	2
-16	AN207DP3	.BEARING -	101-	1
-17	172-43070	.BUSHING - ENGINE POWER CTL LEVER SPRING	101-	1
-18	SN1204B	.SPRING - (HUN) (MANUAL RANGE CONTROL)	101-	1
-19	AN393-25	.PIN - (BEARING & BUSHING TO BRACKET ATT)	101-	1
	AN380-2-1	.COTTER-PIN -	101-	1
-20	AN515-8R4	.SCREW -	101-	1
	AN935-8L	.WASHER -	101-	1
-21	AN742D8C	.CLAMP -	101-	1
	AN515-8R8	.SCREW -	101-	1
	AN365-832	.NUT -	101-	1
-22	AN742D6C	.CLAMP -	101-	1
	AN515-8R8	.SCREW -	101-	1
	AN365-832	.NUT -	101-	1
-23	AN3234-1	.SWITCH - CLASS E LIMIT	101-	1
-24	172-43053	.SPACER - ENGINE POWER CONTROL MANUAL RANGE CONTROL SWITCH SUPPORT	101-	2
-25	AN515-4R16	.SCREW - (SWITCH TO ARM ATTACHING)	101-	4
	AN960D4	.WASHER -	101-	2
	AN365-440	.NUT -	101-	1
	AN515-4R3	.SCREW -	101-	1
-26	172-43060	.QUADRANT - ENGINE PWR/CTL LEVER HANDLE SPG		

FIGURE AND INDEX NUMBER	GROUP POWER PLANT MAJOR ASSEMBLY ENGINE POWER CONTROL QUADRANT THROTTLE LEVER PART NUMBER 1234567 NOMENCLATURE	CODE	UNITS PER ASSY
116 -27	AN565A6H3 •SCREW -	101-	4
-28	172-43052 •CLIP - ENGINE CTL MAN. RANGE SW ACTUATING (REWORK AS PER EO-05-5E-6A/71)	101-	1
	AN500A8-6 •SCREW - (CLIP TO QUADRANT ATTACHING)	101-	2
	191-43043 •GRIP ASSY - ENGINE POWER CONTROL LEVER	101-	1
	191-43040 ••ADAPTER ASSY - ENG PWR CTL LEVER HANDLE	101-	1
-29	191-43040-3 •••ADAPTER - ENGINE CONTROL LEVER HANDLE	101-	1
-30	172-43074 •••BEARING - ENG PWR CTL LEVER HANDLE ADPT	101-	1
-31	4B16CP3-8 •••BEARING - SINTERED OIL IMPREGNATED (NAA)	101-	1
-32	172-43075 ••DRIVE-SHAFT - ENGINE CONTROL QUADT MANUAL RANGE CONTROL RHEOSTAT	101-	1
-33	172-43062 ••RETAINER - ENGINE PWR/CTL DETENT BALLAST	101-	1
	COMMERCIAL ••BALL - STAINLESS STEEL 3/16-IN. DIAMETER	101-	2
-34	172-43054 ••SPRING - COMPRESSION	101-	1
-35	COMMERCIAL ••SET-SCREW - 1/4-20 X 1/4	101-	1
	191-43031 ••BASE ASSY - ENGINE POWER CTL LEVER GRIP	101-	1
-36	191-43031-3 •••BASE - ENGINE CONTROL LEVER GRIP	101-	1
-37	120-43091 •••INSERT - ENGINE CONTROL QUADRANT CAP RH	101-	2
-38	172-43067 •••BEARING - ENGINE POWER CONTROL LEVER HANDLE INSERT	101-	1
-39	172-43073 ••PIN - ENGINE POWER CONTROL LEVER	101-	1
-40	191-43041 ••RING - ENGINE POWER CTL LEVER HANDLE STOP	101-	1
	AN515-6R3 ••SCREW - (RING TO BEARING ATTACHING)	101-	2
	AN936A6 ••WASHER -	101-	2
-41	AN3021-1 ••SWITCH - ONE-HOLE MTG SINGLE-POLE TOGGLE (SPEEDBRAKE OPERATING)	101-	1
	2W1AL34-21-64 ••WASHER - PLAIN (NAA)	101-	1
-42	138106 ••SWITCH - SNAP (UCI) (MICROPHONE & GYRO GUNSIGHT CAGING)	101-610	2
	W104NGY3GY ••SWITCH - PUSH BUTTON (HET) (MICROPHONE & GYRO GUNSIGHT CAGING)	611-	2
-43	141-43023 ••SPRING - ENGINE THROTTLE SW RETAINING	101-	1
-44	191-43028 ••CAP - ENGINE POWER CONTROL LEVER GRIP	101-	1
-45	AN515-4R12 ••SCREW - (CAP TO BASE ATTACHING)	101-	2
-46	191-43029 ••GUIDE - ENGINE POWER CONTROL GRIP SPEEDBRAKE BUTTON	101-	1
-47	PK54Z-2-5 ••SCREW - TYPE Z SHEET METAL SLOTTED (PKC)	101-	2
-48	191-43030 ••BUTTON - ENGINE POWER CONTROL SPEEDBRAKE TOGGLE SWITCH	101-	1
	AN565B4-3 ••SCREW - (BUTTON RETAINING)	101-	2
-49	191-43042 •STOP - ENGINE POWER CONTROL LEVER	101-	1
-50	AN509-416R14 •SCREW -	101-	1
	AN509-416R14 •SCREW -	101-370	1
-51	13B-95013 •BOLT - ENGINE CONTROL QUADT THROTTLE LEVER	371-	1
	AN364-428 •NUT -	101-	2

-000-

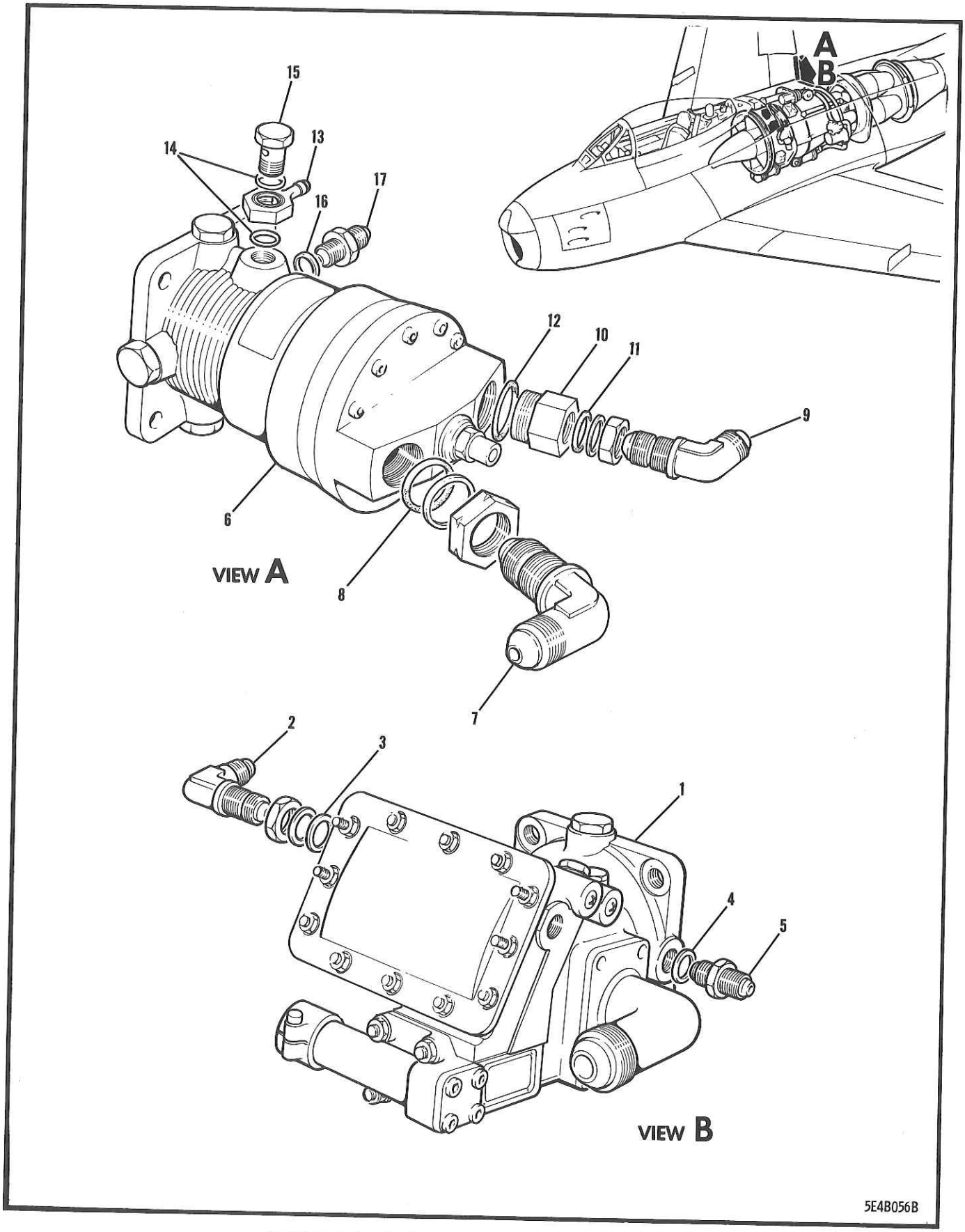

FIGURE 117 POWER & UTILITY CONTROL PUMPS

FIGURE AND INDEX NUMBER	GROUP / MAJOR ASSEMBLY / PART NUMBER	POWER PLANT / POWER & UTILITY CONTROL PUMPS / 1234567 NOMENCLATURE	CODE	UNITS PER ASSY
117 -	13A-71602	PUMP ASSY - HYDRAULIC NORMAL SUR CTL SYSTEM (SEE FIG. 102)		1
- 1	AA32516-L-2	•PUMP - VARIABLE DISPLACEMENT (VII)		1
- 2	AN833-6D	•ELBOW -		1
- 3	AN6290-6	•GASKET -		1
	AN6291-6	•RING -		1
	AN6289D6	•NUT -		1
- 4	AN6290-4	•GASKET -		1
- 5	AN815-4D	•UNION -		1
	13A-71604	PUMP ASSY - HYDRAULIC UTILITY SYSTEM (SEE FIG. 102 & 103)		
- 6	67WA200	•PUMP - ENGINE-DRIVEN HYDRAULIC (NYA)	001-588	1
	67WA200-1	•PUMP - ENGINE-DRIVEN HYDRAULIC (NYA)	589-	1
		OR		
	67WA200-2	•PUMP - ENGINE-DRIVEN HYDRAULIC (NYA)		
		OR		
	67WA200-3	•PUMP - ENGINE-DRIVEN HYDRAULIC (NYA)		
- 7	AN833-12D	•ELBOW -		1
	AN6291-12	•RING -		1
- 8	AN6290-12	•GASKET -		1
	AN6289D12	•NUT -		1
- 9	AN833-8D	•ELBOW -		1
-10	AN893-151D	•BUSHING -		1
	AN6291-8	•RING -		1
-11	AN6290-8	•GASKET -		1
-12	AN6290-10	•GASKET -		1
	AN6289D8	•NUT -		1
-13	13A-71401	•BANJO FITTING - UTILITY PUMP CASE DRAIN	001-736	1
	13A-71401-2	•BANJO FITTING - UTILITY PUMP CASE DRAIN	737-	1
-14	AN901-6C	•GASKET -		2
-15	13A-71402	•BOLT - BANJO FTG UTILITY PUMP CASE DRAIN		1
-16	AN6290-4	•GASKET -		1
-17	AN815-4D	•UNION -		1

-000-

SECTION 6

FURNISHINGS EQUIPMENT

TABLE OF CONTENTS

FIGURE	TITLE	PAGE
118	PILOT EJECTION SEAT	564
119	PILOT EJECTION SEAT SHOULDER HARNESS	570
120	FUSELAGE FURNISHINGS	574
121	FUSELAGE FURNISHINGS PANELS	578
122	AUTO RELEASE MECHANISM	584
123	PILOT EJECTION SEAT HEADREST	586
124	PILOT EJECTION SEAT ARMREST	590

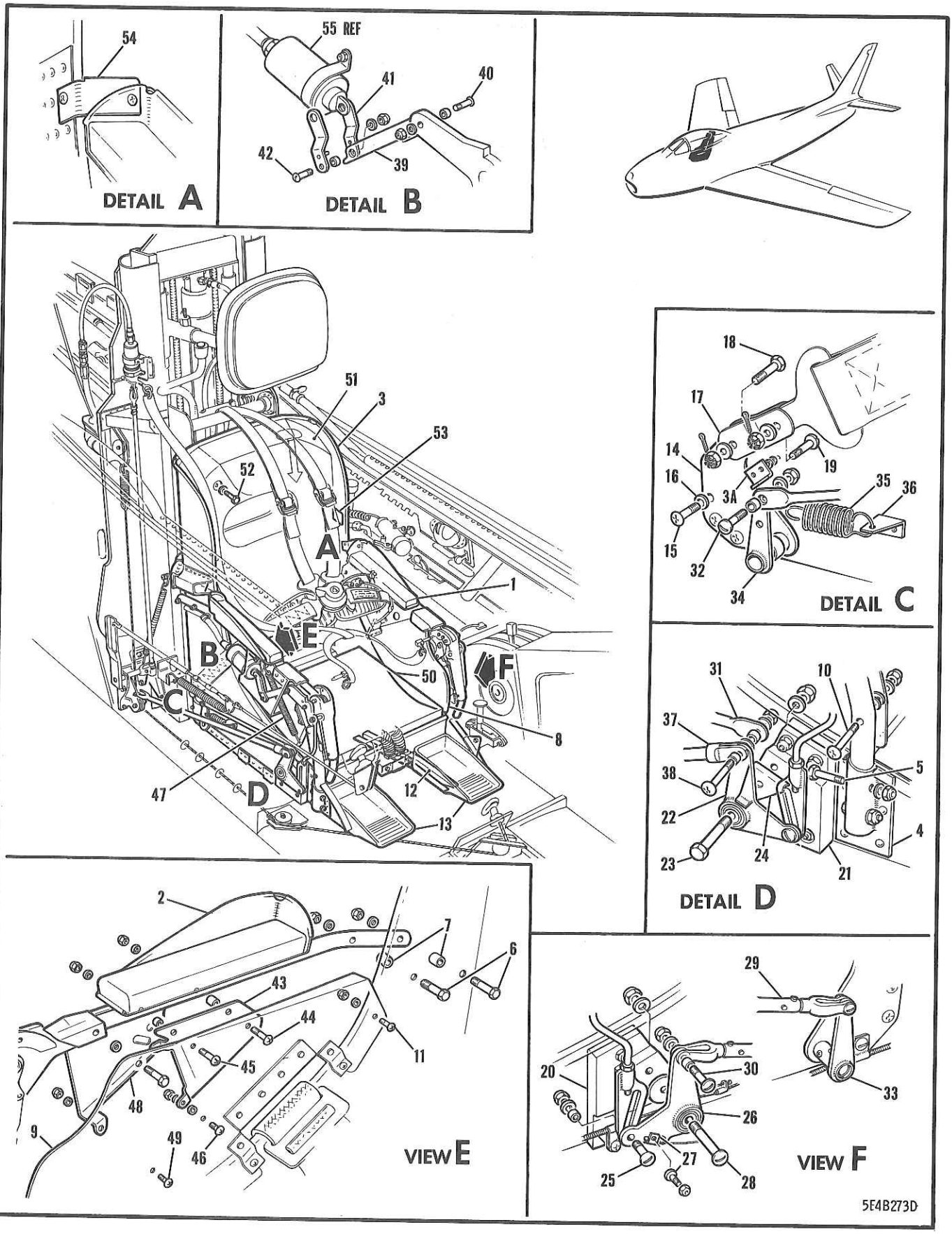

FIGURE 118 PILOT EJECTION SEAT

FIGURE AND INDEX NUMBER	GROUP / MAJOR ASSEMBLY / PART NUMBER	FURNISHINGS EQUIPMENT / PILOT EJECTION SEAT / 1234567 NOMENCLATURE	CODE	UNITS PER ASSY
118 -	170-53009-30	SEAT ASSY - PILOT EJECTION (SABRE 5) (SEE FIG. 120) (AS PER EO 05-5E-6B/10)	001-370	1
	227-53009-800	SEAT ASSY - PILOT EJECTION (SABRE 6) (SEE FIG. 120) (AS PER EO 05-5E-6B/15)	371-679	1
	227-53009-805	SEAT ASSY - PILOT EJECTION (SABRE 6)	680-	1
- 1	172-53130-803	•ARMREST ASSY - EJECTION SEAT (COMPLETE) PORT SIDE (SEE FIG. 124)		REF
- 2	172-53130-804	•ARMREST ASSY - EJECTION SEAT (COMPLETE) STARBOARD SIDE (SEE FIG. 124)		REF
- 3	170-53017	•BUCKET ASSY - EJECTION SEAT	001-370	1
	170-53017-60	•BUCKET ASSY - EJECTION SEAT	371-	1
	170-53017-802	•SPARE PART ASSY FOR 170-53017 & -60		
	170-53062	••SHELF - EJECTION SEAT REAR	001-100	1
	170-53062-10	••SHELF - EJECTION SEAT REAR	101-370	1
	202-53062	••SHELF - EJECTION SEAT REAR	371-	1
	NAS221-7	••SCREW -		8
	AN960C10L	••WASHER -		8
	AN364-1032	••NUT -		8
- 3A	K13-105-4	•STOP - (AS PER EO 05-5E-6A/206)		12
	AN960D6	•WASHER - (BETWEEN STOP & SIDE PANEL IF REQD) (AS PER EO 05-5E-6A/206)		48
- 4	170-53047-1	•SUPPORT - EJECTION SEAT ARMREST PORT SIDE		1
	170-53047-2	•SUPPORT - EJECTION SEAT ARMREST STBD SIDE		1
- 5	AN3-13A	•BOLT - (ARMREST TUBE TO SUPPORT ATTACHING)		4
	AN960C10	•WASHER -	001-370	4
	2W18-10	•WASHER - FLAT (NAA)	371-	4
	AN365-1032	•NUT -		4
- 6	AN3-13A	•BOLT - (ARMREST TUBE TO BUCKET ATTACHING)		4
- 7	NAS43-3-14	•SPACER -		4
	AN960C10	•WASHER -	001-370	4
	2W18-10	•WASHER - FLAT (NAA)	371-	4
	AN365-1032	•NUT -		4
- 8	170-53067-801	•PANEL ASSY - PILOT EJECTION SEAT ARMREST CLOSE-OUT PORT SIDE		1
- 9	170-53067-802	•PANEL ASSY - PILOT EJECTION SEAT ARMREST CLOSE-OUT STARBOARD SIDE		1
-10	AN515-8R20	•SCREW - (PANEL TO ARMREST TUBE ATTACHING)		2
	AN960C10	•WASHER -	001-370	4
	2W18-10	•WASHER - FLAT (NAA)	371-	4
	AN960C8L	•WASHER -	001-370	2
	2W18-8L	•WASHER - FLAT (NAA)	371-	2
	AN365-832	•NUT -		2
-11	AN515-8R8	•SCREW - (PANEL TO BUCKET ATTACHING)		8
	AN960C10L	•WASHER -	001-370	8
	2W18-8L	•WASHER - FLAT (NAA)	371-	8
	AN365-832	•NUT -		8
-12	170-53015-1	•SUPPORT - EJECTION SEAT FOOTREST PORT SIDE		1
	170-53015-2	•SUPPORT - EJECTION SEAT FOOTREST STBD SIDE		1
	NAS221-12	•SCREW - (SUPPORT ATTACHING)		4
	AN960C10	•WASHER -	001-370	4
	2W18-10	•WASHER - FLAT (NAA)	371-	4
	AN365-1032	•NUT -		4
-13	170-53016	•FOOTREST - EJECTION SEAT		2
-14	172-53123-100	•SUPPORT - EJECTION SEAT INITIATOR & CANOPY RELEASE LOWER BELL-CRANK	001-370	2
	172-53123	•SUPPORT - EJECTION SEAT INITIATOR & CANOPY RELEASE LOWER BELL-CRANK	371-	2
-15	NAS223-13	•SCREW -	001-610	6

FIGURE AND INDEX NUMBER	GROUP / MAJOR ASSEMBLY / PART NUMBER	FURNISHINGS EQUIPMENT / PILOT EJECTION SEAT / 1234567 NOMENCLATURE	CODE	UNITS PER ASSY
118 -	NAS223-13	•SCREW -	611-	5
	2W18-516	•WASHER - FLAT (NAA)		6
-16	2W18-516M	•WASHER - FLAT (NAA)	001-610	6
	2W18-516M	•WASHER - FLAT (NAA)	611-	5
	AN365-524	•NUT -	001-610	6
	AN365-524	•NUT -	611-	5
-17	202-53021-101	•LINK - EJECTION SEAT LAP SAFETY BELT EXTN (AS PER EO 05-5E-6A/206)		4
-18	AN4-5	•BOLT - (AS PER EO 05-5E-6A/133)	A48	2
	2W18-416	•WASHER - FLAT (NAA)	A48	2
	AN310-4	•NUT -	A48	2
	AN380-2-3	•COTTER-PIN -	A48	2
-19	AN24-10	•BOLT - (AS PER EO 05-5E-6A/133)	001-679	2
	2W18-416L	•WASHER - FLAT (NAA)	001-679	2
	AN310-4	•NUT -	001-679	2
	AN380-2-3	•COTTER-PIN -	001-679	2
-20	172-53108-1	•SUPPORT - EJECTION SEAT CANOPY EMY RELEASE BELL-CRANK PORT SIDE		1
-21	170-31836	•SUPPORT - CANOPY EMERGENCY REL BELL-CRANK	001-370	1
	172-53108-2	•SUPPORT - EJECTION SEAT CANOPY EMY RELEASE BELL-CRANK STARBOARD SIDE	371-	1
	NAS221-21	•SCREW - (SUPPORT ATTACHING STARBOARD SIDE)	001-370	2
	NAS221-16	•SCREW - (SUPPORT ATTACHING)	001-370	3
	NAS221-16	•SCREW - (SUPPORT ATTACHING)	371-	2
	NAS221-12	•SCREW - (SUPPORT ATTACHING)	001-370	1
	NAS221-13	•SCREW - (SUPPORT ATTACHING)	371-	3
	AN960C10	•WASHER -	001-370	4
	2W18-10	•WASHER - FLAT (NAA)	001-370	2
	2W18-10	•WASHER - FLAT (NAA)	371-	5
	AN365-1032	•NUT -	001-370	6
	AN365-1032	•NUT -	371-	5
-22	172-53134-800	•BELL-CRANK ASSY - EJECTION SEAT CANOPY EMY RELEASE STBD (AS PER EO 05-5E-6B/11)		1
-23	AN4-17A	•BOLT -	001-370	1
	AN24-28A	•BOLT -	371-	1
	AN960C416	•WASHER -	001-370	1
	2W18-416	•WASHER - FLAT (NAA)	371-	1
-24	13-86032	•STOP - CANOPY EMY RELEASE SEAT BELL-CRANK	001-370	1
	13-86032-3	•STOP - CANOPY EMY RELEASE SEAT BELL-CRANK	371-	1
	AN365-428	•NUT -	001-430	1
	AN364-428	•NUT -	431-	1
-25	NAS221-9	•SCREW - (LINK TO BELL-CRANK ATTACHING)	001-370	2
	AN525-10-8	•SCREW - (LINK TO BELL-CRANK ATTACHING)	371-	2
	NAS43-3-8	•SPACER -		2
	2W18-10	•WASHER - FLAT (NAA)		4
	AN364-1032	•NUT -		2
-26	172-53103	•BELL-CRANK ASSY - EJECTION SEAT CANOPY EMERGENCY RELEASE PORT SIDE		1
-27	172-53103-7	••CLAMP - EJECTION SEAT CANOPY EMERGENCY RELEASE BELL-CRANK PORT SIDE		1
	AN3-3A	••BOLT - (CLAMP TO BELL-CRANK ATTACHING)		1
	AN365-1032	••NUT -		1
-28	AN24-28A	•BOLT -		1
	2W1-16-32-63	•WASHER - PLAIN (NAA)		1
	2W18-416	•WASHER - FLAT (NAA)		1
	AN960C416	•WASHER -	001-370	1
	AN365-428	•NUT -	371-	1
	AN364-428	•NUT -	001-430	1
-29	172-53105	•ROD ASSY - EJECTION SEAT CANOPY REL PORT	431-	1
-30	AN23-10A	•BOLT - (ROD BELL-CRANK & TORQUE ARM PORT)		1
				2

FIGURE AND INDEX NUMBER	GROUP FURNISHINGS EQUIPMENT MAJOR ASSEMBLY PILOT EJECTION SEAT PART NUMBER	1234567 NOMENCLATURE	CODE	UNITS PER ASSY
118 -	NAS43C-3-8	•SPACER -		2
	AN365-1032	•NUT -		2
-31	172-53104	•ROD - EJECTION SEAT CANOPY EMY REL STBD		1
-32	NAS221-9	•SCREW - (ROD TO TORQUE TUBE STBD SIDE)		1
	NAS43-3-6	•SPACER -		2
	AN960-10L	•WASHER -		4
	AN365-1032	•NUT -		2
-33	172-53107-800	•TORQUE ARM ASSY - EJECTION SEAT CANOPY EMERGENCY RELEASE (PORT SIDE) (AS PER EO 05-5E-6A/213)		1
	NAS221-17	•SCREW -		2
	2W18-10M	•WASHER - FLAT (NAA)		2
	AN365-1032	•NUT -		2
-34	172-53106-802	•TORQUE TUBE ASSY - EJECTION SEAT CANOPY EMERGENCY RELEASE (STARBOARD SIDE)	001-370	1
	172-53106	•TORQUE TUBE ASSY - EJECTION SEAT CANOPY EMERGENCY RELEASE (STARBOARD SIDE)	371-	1
	NAS43-8-20	•SPACER -		1
-35	151-53591	•SPRING - H/VENT SYS AMO HEAT EMERGENCY SHUT-OFF VALVE CONTROL		1
-36	2C7-1	•CLIP - (NAA)		1
-37	13A-83019	•CLEVIS - EJECTION SEAT CANOPY JETTISON BELL-CRANK (AS PER EO 05-5E-6B/11)		1
-38	NAS221-17	•SCREW - (CLEVIS & ROD TO BELL-CRANK ATT)		1
	NAS43-3-40	•SPACER -		1
	NAS43-5-10	•SPACER -		1
	AN960-516L	•WASHER -		1
	AN960-10	•WASHER -		2
	AN365-1032	•NUT -		1
-39	202-53013-1	•LINK - PILOT EJECTION SEAT CATAPULT INITIATOR UPPER PORT SIDE		1
	202-53013-2	•LINK - PILOT EJECTION SEAT CATAPULT INITIATOR UPPER STARBOARD SIDE		1
-40	AN23-11A	•BOLT - (LINK TO TRIGGER ATTACHING)		2
	NAS43-3-8	•SPACER -		2
	2W18-10	•WASHER - FLAT (NAA)		2
	AN365-1032	•NUT -		2
-41	202-53012	•LINK - PILOT EJECTION SEAT CATAPULT INITIATOR LOWER		4
	NAS42HT4-8	•SPACER -		2
-42	AN23-10A	•BOLT -		2
	NAS43-3-8	•SPACER -		2
	2W18-10	•WASHER - FLAT (NAA)		2
	AN365-1032	•NUT -		2
-43	202-53010-1	•BRACKET - EJ SEAT CATAPULT INITIATOR PORT		1
	202-53010-2	•BRACKET - EJ SEAT CATAPULT INITIATOR STBD		1
-44	AN23-25A	•BOLT -		2
	NAS43-3-24	•SPACER -		2
	2W18-10	•WASHER - FLAT (NAA)		2
	AN365-1032	•NUT -		2
-45	AN23-24A	•BOLT -		2
	NAS43-3-16	•SPACER -		2
	2W18-10	•WASHER - FLAT (NAA)		2
	AN365-1032	•NUT -		2
-46	NAS221-8	•SCREW - (BRACKET ATTACHING)		4
	2W18-10	•WASHER - FLAT (NAA)	001-370	4
	2W18-10M	•WASHER - FLAT (NAA)	001-370	4
	2W18-10	•WASHER - FLAT (NAA)	371-	8
	AN365-1032	•NUT -		4
-47	202-53127	•SPRING - TENSION		2

FIGURE AND INDEX NUMBER	GROUP / MAJOR ASSEMBLY / PART NUMBER	FURNISHINGS EQUIPMENT / PILOT EJECTION SEAT / 1234567 NOMENCLATURE	CODE	UNITS PER ASSY
118 -48	202-53011-1	•GUARD ASSY - EJECTION SEAT CATAPULT INITIATOR LINKAGE PORT SIDE (REWORK AS PER EO 05-5E-6A/148)		1
	202-53011-952	•SPARE PART FOR 202-53011-1		
	202-53011-2	•GUARD ASSY - EJECTION SEAT CATAPULT INITIATOR LINKAGE STARBOARD SIDE (REWORK AS PER EO 05-5E-6A/148)		1
	202-53011-952	•SPARE PART FOR 202-53011-2		
-49	NAS221-8	•SCREW - (GUARD ATTACHING)		2
	NAS221-9	•SCREW - (GUARD ATTACHING)		2
	2W18-10	•WASHER - FLAT (NAA)		4
	AN365-1032	•NUT -		4
-50	165-53085	•BLOCK ASSY - PILOT SEAT CUSHION LOWER	001-100	1
	165-53085-70	•BLOCK ASSY - PILOT SEAT CUSHION LOWER	101-	1
-51	151-53049-10	•BLOCK - PILOT SEAT BACK FILLER		1
-52	AN3-22A	•BOLT - (BLOCK TO BUCKET ATTACHING)		4
	2W1AL14-28-40	•WASHER - PLAIN (NAA)		4
-53	13-63031	•NAME-PLATE - EJECTION SEAT		1
-54	227-53009-951	•BRACKET - GUARD (AS PER EO 05-5E-6A/223)		1
	AN515-8-8	•SCREW - (BRACKET ATTACHING) (AS PER EO 05-5E-6A/223)		2
	AN960-8	•WASHER -		
	AN364-832	•NUT -		3
-55	CLX-32-1	INITIATOR - (TYPE M3) (G•F•E•) (SEE FIG• 120)		2 REF
		(CONTINUED SEE FIG• 119)		

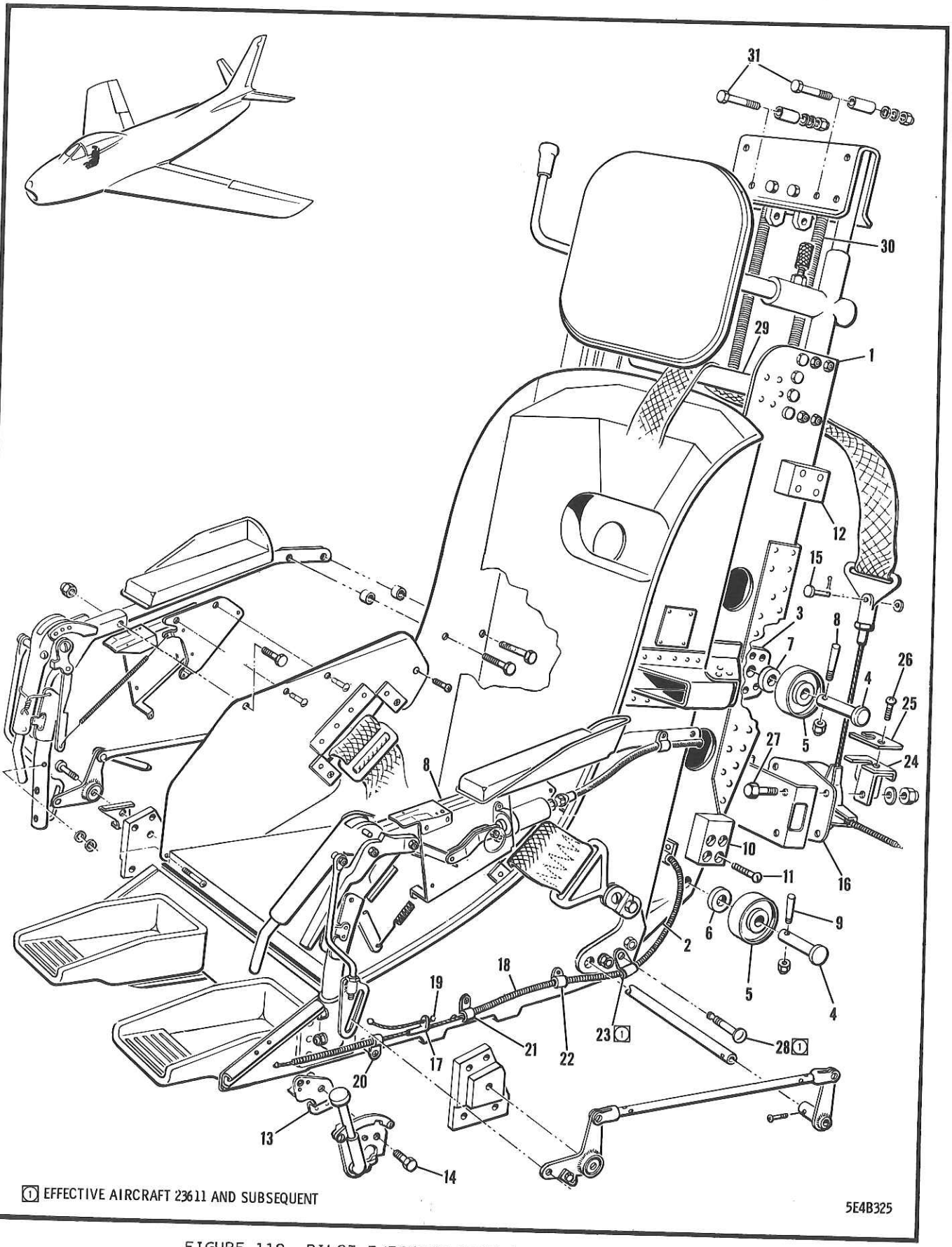

FIGURE 119 PILOT EJECTION SEAT SHOULDER HARNESS

FIGURE AND INDEX NUMBER	GROUP FURNISHINGS EQUIPMENT MAJOR ASSEMBLY PILOT EJECTION SEAT SHOULDER HARNESS PART NUMBER	1234567 NOMENCLATURE	CODE	UNITS PER ASSY
119 -	170-53009-30	SEAT ASSY - PILOT EJECTION (SABRE 5) (SEE FIG. 118)		REF
	227-53009-800	SEAT ASSY - PILOT EJECTION (SABRE 6) (SEE FIG. 118)		REF
- 1	170-53043-1	.SUPPORT ASSY - EJECTION SEAT BACK PORT		1
	170-53043-2	.SUPPORT ASSY - EJECTION SEAT BACK STBD		1
- 2	151-53019-5	.SUPPORT - PILOT EJ SEAT LOWER ROLLER PORT		1
	151-53019-6	.SUPPORT - PILOT EJ SEAT LOWER ROLLER STBD		1
	AN3-5A	.BOLT -		4
	AN960C10	.WASHER -	001-370	2
	2W18-10	.WASHER - FLAT (NAA)	371-	4
	AN365-1032	.NUT -		4
	170-53042	.BEAM ASSY - EJECTION SEAT UP. ROLLER SUP.		1
- 3	170-53018	..SUPPORT - EJECTION SEAT UPPER ROLLER		2
- 4	151-53028	.PIN - PILOT EJECTION SEAT ROLLER		4
- 5	151-53023	.ROLLER ASSY - PILOT EJECTION SEAT		4
	NAS75-10-016	..BUSHING -		1
	170-53048-3	.SHIM - EJECTION SEAT LWR ROLLER SUP. FTG		2
	170-53048-5	.SHIM - EJECTION SEAT LWR ROLLER SUP. FTG		2
- 6	2W1AL40-34-250	.WASHER - PLAIN (NAA) (LOWER ROLLER)		2
- 7	2W1AL40-34-1875	.WASHER - PLAIN (NAA) (UPPER ROLLER)	001-370	2
	2W1AL40-34-188	.WASHER - PLAIN (NAA)	371-	2
- 8	AN386-1-8A	.PIN - (UPPER ROLLER)		2
- 9	AN386-1-11A	.PIN - (LOWER ROLLER)		2
	AN975-3	.WASHER -		4
	AN365-1032	.NUT -		4
-10	151-53084	.BLOCK - PILOT EJECTION SEAT GUIDE		2
-11	AN520-10-14	.SCREW - (BLOCK TO SUPPORT ATTACHING)		8
	AN365-1032	.NUT -		8
-12	140-53043-3	.GUIDE - PILOT EJECTION SEAT		2
-13	170-53054	.BRACKET ASSY - SHOULDER HARNESS CTL SUP.		1
-14	AN3-4A	.BOLT - (BRACKET ATTACHING)		2
	AN960C10	.WASHER -	001-370	2
	2W18-10	.WASHER - FLAT (NAA)	371-	2
	AN365-1032	.NUT -		2
-15	AN393-13	.PIN -	001-679	1
	AN960C10L	.WASHER -	001-679	1
	AN380-2-2	.COTTER-PIN -	001-679	1
	170-53142	.BRACKET ASSY - EJECTION SEAT INERTIA REEL SUPPORT		1
-16	151-53193-15	.REEL ASSY - INERTIA	001-370	1
	202-53193	.REEL ASSY - PILOT SEAT INERTIA	371-	1
	0-3903NN-0-4057	..REEL ASSY - INERTIA (AME)		1
-17	151-53193-9	..CONNECTOR - INERTIA REEL	001-370	1
	202-53193-9	..CONNECTOR - PILOT SEAT INERTIA REEL	371-	1
-18	151-53193-7	..CABLE - INERTIA REEL	001-370	1
	202-53193-7	..CABLE - PILOT SEAT INERTIA REEL	371-	1
-19	RA-2487-2	..TERMINAL - PLAIN BALL SWAGED (ACC)		3
-20	AN742D3	.CLAMP - (PORT SIDE)		1
	NAS221-27	.SCREW - (PORT SIDE)		1
	NAS43-3-44	.SPACER - (PORT SIDE)		1
	2W18-10	.WASHER - FLAT (NAA) (PORT SIDE)		1
	AN365-1032	.NUT - (PORT SIDE)		1
-21	AN742D3	.CLAMP - (PORT SIDE)		1
	NAS221-24	.SCREW - (PORT) (AS PER EO 05-5E-6A/133)		1
	NAS43-3-74	.SPACER - (PORT SIDE)		1
	AN960-10L	.WASHER -		1
	AN364-1032	.NUT -		1
-22	AN742D3	.CLAMP -		1
	NAS221-12	.SCREW - (AS PER EO 05-5E-6A/213)		1

FIGURE AND INDEX NUMBER	GROUP FURNISHINGS EQUIPMENT MAJOR ASSEMBLY PILOT EJECTION SEAT SHOULDER HARNESS PART NUMBER	1234567 NOMENCLATURE	CODE	UNITS PER ASSY
119 -	2W18-10M	•WASHER - FLAT (NAA)		1
	NAS43-3-20	•SPACER -		1
	AN365-1032	•NUT -		1
-23	227-53010	•CLAMP - PILOT EJECTION SEAT INERTIA REEL CONTROL CABLE	611-	1
	151-53145	•CLIP - PILOT EJ SEAT GUN-FIRING CABLE		1
	AN742D3	•CLAMP -		2
	NAS221-8	•SCREW -		2
	AN960C10L	•WASHER -	001-370	1
	2W18-10M	•WASHER - FLAT (NAA)	371-	2
	AN365-1032	•NUT -		2
-24	170-53019	•BRACKET ASSY - PILOT INERTIA REEL STOP		1
-25	170-53020	•SPACER - PILOT INERTIA REEL STOP		AR
-26	AN515-8R5	•SCREW - (SPACER TO BRACKET ATTACHING)		1
	AN365-832	•NUT -		1
-27	AN3-5A	•BOLT -		4
	AN960C10	•WASHER -	001-370	4
	2W18-10	•WASHER - FLAT (NAA)	371-	4
	AN365-1032	•NUT -		2
-28	AN25-16A	•BOLT - (AS PER EO 05-5E-6A/133)	611-	1
	NAS43-5-12	•SPACER -	611-	1
	2W18-516M	•WASHER - FLAT (NAA)	611-	1
	AN364-524	•NUT -	611-	1
-29	170-53052	•TUBE ASSY - SHOULDER HARNESS SUPPORT		1
	170-53051	••FITTING - SHOULDER HARNESS SUPPORT TUBE		2
	AN3-15A	••BOLT -		2
	AN960-10	••WASHER -		4
	AN365-1032	••NUT -		2
-30	170-53011	•SPRING - TENSION		2
-31	AN3-14A	•BOLT - (SPRING TO BEAM ATTACHING)		2
	NAS43C-3-64	•SPACER -		2
	AN960C10	•WASHER -	001-370	4
	2W18-10	•WASHER - FLAT (NAA)	371-	4
	AN365-1032	•NUT -		2
		(CONTINUED SEE FIG. 123)		

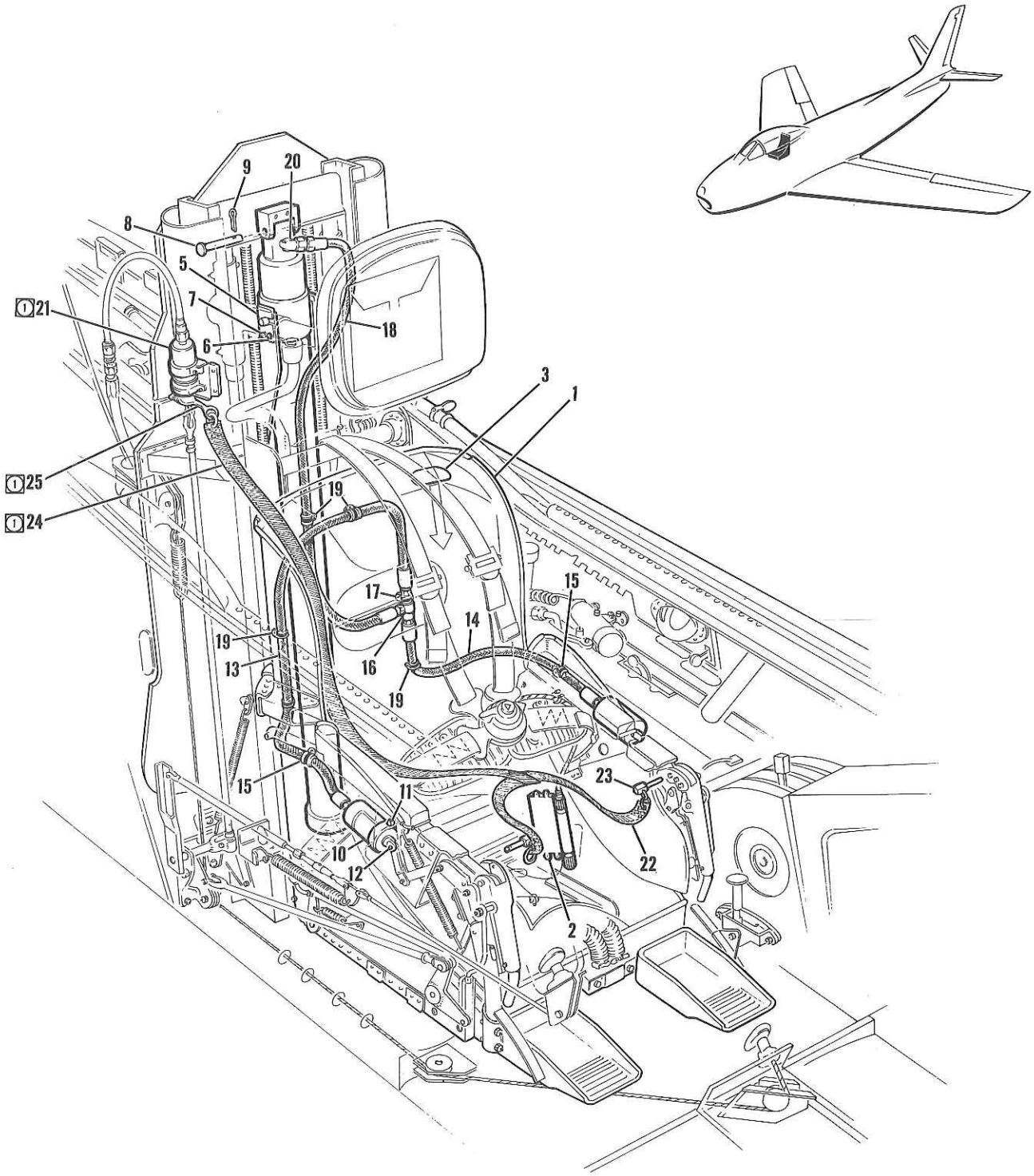

① EFFECTIVE AIRCRAFT 23371 AND SUBSEQUENT

5E4B248E

FIGURE 120 FUSELAGE FURNISHINGS

FIGURE AND INDEX NUMBER	GROUP / MAJOR ASSEMBLY / PART NUMBER	FURNISHINGS EQUIPMENT / FUSELAGE FURNISHINGS / 1234567 NOMENCLATURE	CODE	UNITS PER ASSY
120 -	170-53001-50	FURNISHING INSTL - FUSELAGE COMPLETE (SABRE 5) (SEE SECTION 3) (AS PER EO 05-5E-6B/10)	001-370	NP
	202-53001-801	FURNISHINGS INSTL - COMPLETE (SABRE 6) (SEE SECT. 3)(AS PER EO 05-5E-6B/15)	371-679	NP
	202-53001-805	FURNISHINGS INSTL - COMPLETE (SABRE 6)	680-	NP
- 1	170-53009-30	•SEAT ASSY - PILOT EJECTION (SABRE 5) (SEE FIG. 118)		REF
	227-53009-800	•SEAT ASSY - PILOT EJECTION (SABRE 6) (SEE FIG. 118)		REF
- 2	13B-85001-952	•MECHANISM INSTL - Z TYPE GQ HARNESS & AUTO RELEASE (SEE FIG. 122)		REF
- 3	13B-85026-801	•PLACARD - AUTO LAP BELT CONNECTION WARNING (AS PER EO 05-5E-6A/213)	A16	1
	13B-85026	•PLACARD - AUTO LAP BELT CONNECTION WARNING	680-689	1
- 4	CLX-70-1	•CATAPULT ASSY - AIRCRAFT PERSONNEL (TYPE M5) (G.F.E.)		1
- 5	140-53091-10	•GUN-LOCK - PILOT EJECTION SEAT		2
- 6	AN3-5A	•BOLT -	001-430	2
	AN3-4A	•BOLT -	431-	2
- 7	AN3-6A	•BOLT -		2
		OR		
	AN3-5A	•BOLT -		
	AN960-10	•WASHER -	001-370	2
	2W18-10	•WASHER - FLAT (NAA)	371-	2
	AN365-1032	•NUT -	001-430	2
	AN364-1032	•NUT -	431-	2
- 8	AN398-71	•PIN -		1
	AN960C816	•WASHER -		1
- 9	AN380C3-5	•COTTER-PIN -		1
-10	CLX-32-1	•INITIATOR - TYPE M3 (G.F.E.) (EJECTION SEAT RELEASE)		2
		OR		
	CLX-32-1	•INITIATOR - TYPE M3A1 (G.F.E.) (EJECTION SEAT RELEASE)		2
-11	AN24-11A	•BOLT -		4
	2W18-416	•WASHER - FLAT (NAA)	663-	4
	AN365-428	•NUT -	001-662	4
	AN364-428	•NUT -	663-	4
-12	AN23-11A	•BOLT - (INITIATOR TO LINK ATTACHING)		2
	NAS3-3-8	•SPACER -		4
	2W18-10	•WASHER - FLAT (NAA)		2
	AN365-1032	•NUT -		2
-13	MS28741-4-43	•HOSE - MEDIUM PRESS. DETACHABLE END FTG		1
-14	MS28741-4-24	•HOSE - MEDIUM PRESS. DETACHABLE END FTG		1
-15	AN742-10C	•CLAMP -		2
-16	1112-538469M1	•VALVE - CHECK (PAC)		1
		OR		
	5455	•VALVE - CHECK 3000 PSI (ARP)		
-17	AN742-12C	•CLAMP -		1
	NAS221-15	•SCREW - (AS PER EO 05-5E-6A/269)		1
	NAS43DD3-16	•SPACER - (AS PER EO-05-5E-6A/269)		1
	2W18-10	•WASHER - FLAT (NAA)		1
	AN365-1032	•NUT -		1
-18	MS28741-4-30	•HOSE - MEDIUM PRESS. DETACHABLE END FTG		5
	202-53001-83	•HOSE - (SERV EFFECTIVITY 23001-23370)		1
	NAS221-15	•SCREW -		1
	NAS43DD3-16	•SPACER -		1
	AN823-4	•ELBOW -		1
-19	AN742-10C	•CLAMP -		5
	NAS221-11	•SCREW -	001-370	1
	NAS221-10	•SCREW -	001-370	4
	NAS221-10	•SCREW -	371-	5
	2W18-10	•WASHER - FLAT (NAA)		5
	AN365-1032	•NUT -		5
-20	AN823-4	•ELBOW - (AS PER EO 05-5E-6A/269)		1

FIGURE AND INDEX NUMBER	GROUP	FURNISHINGS EQUIPMENT	CODE	UNITS PER ASSY
	MAJOR ASSEMBLY	FUSELAGE FURNISHINGS		
	PART NUMBER	1234567 NOMENCLATURE		
120 -21	CLX-32-1	•INITIATOR - TYPE M3 (G•F•E•) (CANOPY EMERGENCY RELEASE)	371-	1
	13A-86005-4	•SAFETY-PIN ASSY - COCKPIT CANOPY REMOVER	001-370	1
-22	202-53014-31	•STREAMER ASSY - PILOT SEAT & COCKPIT INITIATOR SAFETY-PIN	001-370	1
-23	BL-CL4-1	••PIN - CAM LEVER TYPE BALL-LOK (PRI)	001-370	2
	AN230B2	••GROMMET -	001-370	1
	202-53014	•STREAMER ASSY - PILOT SEAT & COCKPIT CANOPY INITIATOR SAFETY-PIN OR	371-	1
	202-53014-801	•STREAMER ASSY - PILOT SEAT & COCKPIT INITIATOR SAFETY-PIN	371-	
	202-53014-31	••STREAMER ASSY - PILOT SEAT & COCKPIT CANOPY INITIATOR SAFETY-PIN	371-	1
	BL-CL4-1	•••PIN - CAM LEVER TYPE BALL-LOK (PRI)	371-	2
	AN230B2	•••GROMMET -	371-	1
-24	202-53014-21	••STREAMER ASSY - PILOT SEAT & COCKPIT CANOPY INITIATOR SAFETY-PIN	371-	1
-25	191-31858	•••SAFETY-PIN ASSY - EJECTION SEAT & CANOPY INITIATOR GROUND	371-	1
	AN227-6	•••BUTTON -	371-	2
	AN227-7	•••SOCKET -	371-	2
	AN227-8	•••STUD -	371-	2
	AN227-9	•••EYELET -	371-	2
		(CONTINUED SEE FIG• 121)		

ADVANCE REVISION

Serial #14 dated 24 Mar 61
(Sheet 1 of 1)

(This Advance Revision replaces Advance Revision Serial #6)

The sheet of this Advance Revision is to be inserted in the EO as follows:-

Sheet 1 facing page 576

Item 23 Part number to read BL-CL4-15 in lieu of BL-CL4-1 in two places.

ISSUED ON AUTHORITY OF THE CHIEF OF THE AIR STAFF

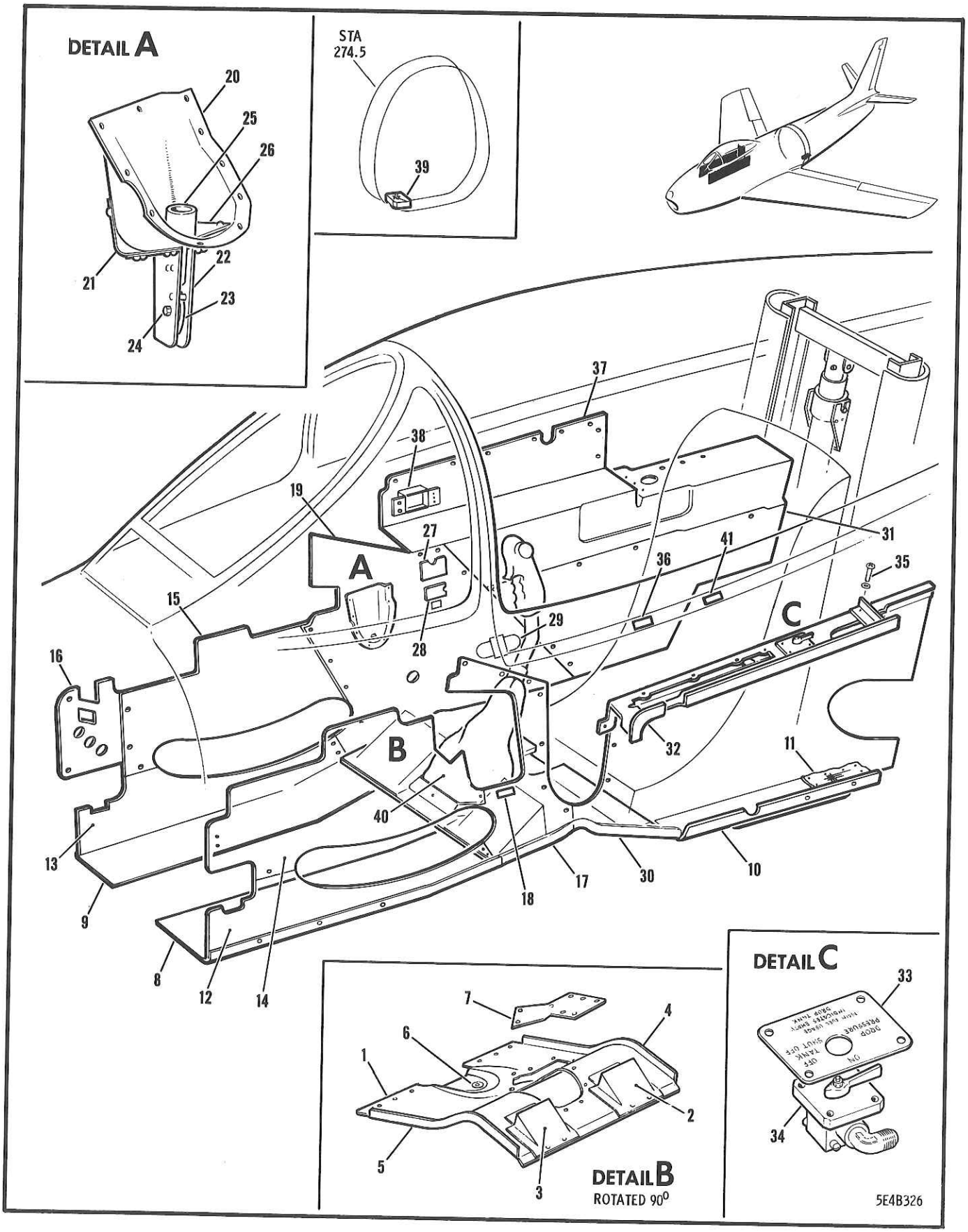

FIGURE 121 FUSELAGE FURNISHINGS PANELS

FIGURE AND INDEX NUMBER	GROUP / MAJOR ASSEMBLY / PART NUMBER	FURNISHINGS EQUIPMENT / FUSELAGE FURNISHINGS PANELS / 1234567 NOMENCLATURE	CODE	UNITS PER ASSY
121 -	170-53001-50	FURNISHINGS INSTL - FUSELAGE COMPLETE (SABRE 5) (SEE FIG. 120)		REF
	202-53001-801	FURNISHINGS INSTL - FUSELAGE COMPLETE (SABRE 6) (SEE FIG. 120)		REF
- 1	170-53031-802	.FLOOR ASSY - PILOT CENTRE SECTION	001-100	1
	170-53031-804	.FLOOR ASSY - PILOT CENTRE SECTION	101-	1
	170-53031-951	..RETAINER - PILOT CENTRE SECTION FLOOR		1
	170-53031-952	..RETAINER - PILOT CENTRE SECTION FLOOR		1
	S-4501 X 24	..EXTRUSION - RUBBER (CAN)		2
	AN227-8	..STUD -		4
	170-53031-7	..ANGLE - PILOT CENTRE SECTION FLOOR	001-100	1
	170-53031-953	..ANGLE - PILOT CENTRE SECTION FLOOR	101-	1
	170-53031-955	..ANGLE - PILOT CENTRE SECTION FLOOR		1
	AN3-5A	..BOLT -		1
- 2	170-53084-1	..GUARD - EJECTION SEAT FOOTREST LH		1
- 3	170-53084-2	..GUARD - EJECTION SEAT FOOTREST RH		1
- 4	170-53033	..ANGLE ASSY - CENTRE COCKPIT FLOOR LH		1
	S4-225	...SPRING - FASTENER (DFC)		4
- 5	170-53034	..ANGLE ASSY - CENTRE COCKPIT FLOOR RH		1
	S4-225	...SPRING - FASTENER (DFC)		2
	AN520-10R7	..SCREW -		8
- 6	AN931-5S13	..GROMMET -		1
	NAS221-8	.SCREW -	001-370	4
	AN507-10R12	.SCREW -	001-370	6
	AN520-10R10	.SCREW -	001-370	4
	AN507-10R10	..SCREW -	371-	14
	A3235-020	.WASHER - FLAT-HEAD SCREW (TIN)	001-370	6
	A3235-020	.WASHER - FLAT-HEAD SCREW (TIN)	371-	12
	48143	.BUTTON - STANDARD TYPE PLUG (UCF)		2
- 7	170-53101-800	.COVER ASSY - AILERON SECTOR ACCESS	001-100	1
	170-53101-802	.COVER ASSY - AILERON SECTOR ACCESS	101-	1
	AN227-6	..BUTTON -		10
	AN227-7	..SOCKET -		10
- 8	151-53030-5	.FLOOR ASSY - PILOT FORWARD SECTION LH		1
	151-53030-950	..PLATE - PILOT FORWARD SECTION LH FLOOR		1
	151-53030-7	..GUARD - PILOT FORWARD SECTION LH FLOOR		1
	S4-225	..SPRING - FASTENER (DFC)		4
- 9	151-53030-2	.FLOOR ASSY - PILOT FORWARD SECTION RH		1
	151-53030-951	..PLATE - PILOT FORWARD SECTION RH FLOOR		1
	S4-225	..SPRING - FASTENER (DFC)		4
	AN515-8R8	.SCREW -		12
	AN520-10R8	.SCREW -		4
	2W1-12-20-32	.WASHER - PLAIN (NAA)		16
-10	170-53032-1	.FLOOR ASSY - REAR COCKPIT LH		1
	A5-45	..FASTENER - OVAL HEAD (DFC)		3
	170-53032-2	.FLOOR ASSY - REAR COCKPIT RH		1
	A5-45	..FASTENER - OVAL HEAD (DFC)		2
	AN507-10R12	.SCREW - (AS PER EO 05-5E-6A/207)	001-370	4
	AN507-10R10	.SCREW - (AS PER EO 05-5E-6A/207)	371-	4
	A3235-020	.WASHER - FLAT-HEAD SCREW (TIN)		5
	48143	.BUTTON - STANDARD TYPE PLUG (UCF)	001-370	2
	48172	.BUTTON - STANDARD TYPE PLUG (UCF)	371-	2
-11	227-53024	.COVER ASSY - COCKPIT REAR FLOOR LH (AS PER EO 05-5E-6A/161)		1
	227-53025	.COVER ASSY - COCKPIT REAR FLOOR RH (AS PER EO 05-5E-6A/161)		1
-12	151-53054-21	.PANEL ASSY - CONSOLE FORWARD LOWER LH		1
-13	151-53054-2	.PANEL ASSY - CONSOLE FORWARD LOWER RH		1
	A4-30	..FASTENER - OVAL HEAD (DFC)		5
	S4-225	..SPRING - FASTENER (DFC)		1

FIGURE AND INDEX NUMBER	GROUP / MAJOR ASSEMBLY / PART NUMBER	FURNISHINGS EQUIPMENT / FUSELAGE FURNISHINGS PANELS / 1234567 NOMENCLATURE	CODE	UNITS PER ASSY
121 -14	176-53053	•PANEL ASSY - CONSOLE FORWARD UPPER LH (REWORK AS PER EO 05-50-6A/159)		1
	2W1AL15-20-16	••WASHER - PLAIN (NAA)		4
	AW4-35	••FASTENER - WINGED TYPE HEAD (DFC)		1
	A4-35	••FASTENER - OVAL HEAD (DFC)		1
	S4-225	••SPRING - FASTENER (DFC)		1
-15	151-53061	•PANEL ASSY - CONSOLE UPPER FWD INTER RH		1
	2W1AL15-20-16	••WASHER - PLAIN (NAA)		6
	A4-35	••FASTENER - OVAL HEAD (DFC)		3
	S4-225	••SPRING - FASTENER (DFC)		3
-16	151-53055	•PANEL ASSY - CONSOLE FORWARD UPPER RH		1
	A4-30	••FASTENER - OVAL HEAD (DFC)		2
	S4-225	••SPRING - FASTENER (DFC)		2
-17	176-53071	•PANEL ASSY - CONSOLE INTERMEDIATE SIDE LH (REWORK AS PER EO 05-5E-6A/273&274)	001-100	1
	176-53071-10	•PANEL ASSY - CONSOLE INTERMEDIATE SIDE LH (REWORK AS PER EO 05-5E-6A/273&274)	101-370	1
	176-53071-801	•PANEL ASSY - CONSOLE INTERMEDIATE SIDE LH (REWORK AS PER EO 05-5E-6A/273&274)	371-	1
	176-53071-3	••PANEL - CONSOLE INTERMEDIATE SIDE LH	001-370	1
	176-53071-803	••PANEL - CONSOLE INTERMEDIATE SIDE LH	371-	1
	A4-30	••FASTENER - OVAL HEAD (DFC)		2
	A4-35	••FASTENER - OVAL HEAD (DFC)		1
	S4-225	••SPRING - FASTENER (DFC)		1
	2W1AL15-20-16	••WASHER - PLAIN (NAA)		6
-18	AN5800-1	••HOLDER ASSY - CORRECTION CARD		1
	176-53069	••PLACARD - LANDING GEAR & FLAP WARNING	001-100	1
	AN507-10R8	•SCREW - (PANEL ATTACHING)	371-	3
	A3236-020	•WASHER - FLAT-HEAD SCREW (TIN)	371-	3
	AN505-8R8	•SCREW - (PANEL ATTACHING)	371-	4
	2W1-12-20-32	•WASHER - PLAIN (NAA)	371-	4
-19	172-53064-802	•PANEL ASSY - CONSOLE INTERMEDIATE RH (AS PER EO 05-5E-6B/11)		1
-20	172-53064-952	••DISH - (ALTERNATE CANOPY JETTISON HANDLE) (AS PER EO 05-5E-6B/11)		1
	13A-83010	••PULLEY ASSY - ALTERNATE CANOPY JETTISON (AS PER EO /5-5E-6B/11)		1
-21	13A-83020	•••ANGLE - ALTERNATE CANOPY JETT PULLEY MTG		1
-22	13A-83012	•••BRACKET ASSY - ALTERNATE CANOPY JETT PUL		1
-23	AN219-2	•••PULLEY -		1
-24	AN4-10	•••BOLT -		1
	AN960-416	•••WASHER -		1
-25	13A-83011	•••BASE - ALTERNATE CANOPY JETTISON HANDLE		1
-26	13A-83021	••NAME-PLATE - ALTERNATE CANOPY JETTISON (AS PER EO 05-5E-6B/11)		1
-27	15C1-7	••CARD ASSY - FREQUENCY CHAN DESIG (NAA)		1
	S4-225	••SPRING - FASTENER (DFC)		3
-28	AN5800-2	••HOLDER ASSY - CORRECTION CARD		1
	AN507-832R8	••SCREW - (AS PER EO 05-5E-6A/275)		1
	A3135-017	••WASHER - (TIN) (AS PER EO 05-5E-6A/275)		1
	117-51070	••DECALCOMANIA - PILOT STAND-BY COMPASS CORRECTION CARD		1
	2W1AL15-20-16	••WASHER - PLAIN (NAA)		15
-29	172-53064-3	••COVER ASSY - CONSOLE INTER RH PANEL		1
	A6029-832-1	•••NUT - SPECIAL TWIN (TIN)		1
	AN509-8R6	•••SCREW -		2
	NAS42DD4-7	••SPACER -		3
	S•P•1561-8-32-8	•SEMS - FAIRING WASHER (SHI)	371-	2
	48143	•BUTTON - STANDARD TYPE PLUG (UCF)	001-370	1
	48143	•BUTTON - STANDARD TYPE PLUG (UCF)	371-	2
-30	151-53051-20	•PANEL ASSY - CONSOLE REAR SIDE LH (LOWER)	001-100	1
	151-53051-30	•PANEL ASSY - CONSOLE LOWER REAR SIDE LH	101-	1
	2W1AL15-20-16	••WASHER - PLAIN (NAA)		16
	A4-30	••FASTENER - OVAL HEAD (DFC)		8

FIGURE AND INDEX NUMBER	GROUP / MAJOR ASSEMBLY / PART NUMBER	FURNISHINGS EQUIPMENT / FUSELAGE FURNISHINGS PANELS / 1234567 NOMENCLATURE	CODE	UNITS PER ASSY
121 -	295134-8A	••GROMMET - (MKM) (PLASTIC)		1
	AN515-8R8	•SCREW -	371-	3
	2W1-12-20-32	•WASHER - PLAIN (NAA)	371-	3
-31	170-53063	•PANEL ASSY - CONSOLE REAR RH (LOWER)		1
	2W1AL15-20-16	••WASHER - PLAIN (NAA)		14
	A4-30	••FASTENER - OVAL HEAD (DFC)		7
	295134-8A	••GROMMET - (MKM) (PLASTIC)		1
-32	172-53050-11	•PANEL ASSY - CONSOLE UPPER LH (REAR)	001-100	1
	172-53050-803	•PANEL ASSY - CONSOLE UPPER LH (REAR)	101-210	1
	172-53050-801	•PANEL ASSY - CONSOLE UPPER LH (REAR)	211-370	1
	172-53050-805	•PANEL ASSY - CONSOLE TOP LH (REAR)	371-	1
	EO320636-10	••PLUG - PANEL CUT-OUT	211-	1
	AN515-8R12	••SCREW -	211-	1
	2W1-11-16-64	••WASHER - PLAIN (NAA)	211-	1
	AN365-832	••NUT -	211-	1
-33	151-48225	••DIAL - DROP FUEL PRESSURE SHUT-OFF VALVE		1
	AN509-8R8	••SCREW -		4
	AN365-832	••NUT -		4
	172-48230	••VALVE ASSY - DROP FUEL TANK PRESSURE SHUT-OFF		1
-34	32222	•••VALVE - SHUT-OFF (KAP)		1
	MS20822-6B	•••ELBOW - FLARED TUBE & PIPE THREAD 90-DEG		2
	AN507-1024R7	••SCREW -		4
	AN960-10	••WASHER -		4
	172-53050-5	••DOUBLER - PANEL CONSOLE TOP LH		1
	151-53197	••ANGLE - CONSOLE UPPER PANEL REINF LH		1
-35	NAS220-7	••SCREW -		2
	2W1-12-20-32	••WASHER - PLAIN (NAA)		AR
	AN515-6R7	•SCREW -	001-370	5
	NAS220-8	•SCREW -	371-	6
	2W1-12-20-32	•WASHER - PLAIN (NAA)	001-370	5
	2W1-12-20-32	•WASHER - PLAIN (NAA)	371-	6
-36		•DELETED -		
-37	161-53064-800	•PANEL ASSY - CONSOLE UPPER RH (REAR) (AS PER EO 05-5E-6A/36)	001-370	1
	161-53064-810	•PANEL ASSY - CONSOLE TOP RH (REAR)	371-	1
	161-53064-950	••PANEL - CONSOLE UPPER RH (REAR) (AS PER EO 05-5E-6A/275)	001-370	1
	161-53064-958	••PANEL - CONSOLE TOP RH (REAR) (AS PER EO 05-5E-6A/275)	371-	1
	161-53065-30	••PANEL ASSY - CONSOLE TOP RH (REAR)		1
	2W1AL15-20-16	•••WASHER - PLAIN (NAA)		6
	A4-30	•••FASTENER - OVAL HEAD (DFC)		3
	S4-225	•••SPRING - FASTENER (DFC)		7
	170-54088	••HOLDER ASSY - ELECTRICAL SPARE LAMP		1
	AN931-4-7	••GROMMET -		1
	2W1AL15-20-16	••WASHER - PLAIN (NAA)		10
	A4-30	••FASTENER - OVAL HEAD (DFC)		5
-38	13-50059-800	••COVER ASSY - ELECTRICAL SPARE LAMP HOLDER		1
	AN227-6	•••BUTTON -		1
	AN227-7	•••SOCKET -		1
	AN227-10-10	••STUD -		1
	AN365D1032	••NUT -		1
	AN960-10L	••WASHER - (AS PER EO 05-5E-6A/36)	001-100	3
	AN960PD4	••WASHER -	101-	3
	161-53064-956	••DECALCOMANIA - GROUND TEST VHF & IFF EMY		1
	151-53100	•STIFFENER ASSY - DATA CASE SUPPORT		2
	AN515-8-6	•SCREW -		2
	172-53027	•SUPPORT ASSY - AIRCRAFT DATA CASE		2
	AN526-1032R7	•SCREW -		4

FIGURE AND INDEX NUMBER	GROUP FURNISHINGS EQUIPMENT MAJOR ASSEMBLY FUSELAGE FURNISHINGS PANELS PART NUMBER	1234567 NOMENCLATURE	CODE	UNITS PER ASSY
121 -39	36G2873	•CASE - AIRCRAFT DATA (HAR)		1
	AN3-4A	•BOLT -		4
-40	170-53083-800	•BOOT ASSY - CONTROL STICK (MODIFY AS PER EO 05-5E-6A/117)	001-100	1
	170-53083-802	•BOOT ASSY - CONTROL STICK (MODIFY AS PER EO 05-5E-6A/117)	101-	1
	AN227-6	••BUTTON -		11
	AN227-7	••SOCKET -		11
	AN227-8	••STUD -		1
	AN227-9	••EYELET -		1
	AN229-1BL40	••FASTENER -		1
	13-86030	•NAME-PLATE - AIRCRAFT IDENTIFICATION		1
	AN530-2-4	•SCREW -		4
-41	191-63011	•NAME-PLATE - BOMB RESTRICTION (AS PER EO 05-5E-6A/163)		1
	AN535-4-5	•SCREW - (AS PER EO 05-5E-6A/163)	001-100	1

(CONTINUED SEE SECTION 16)

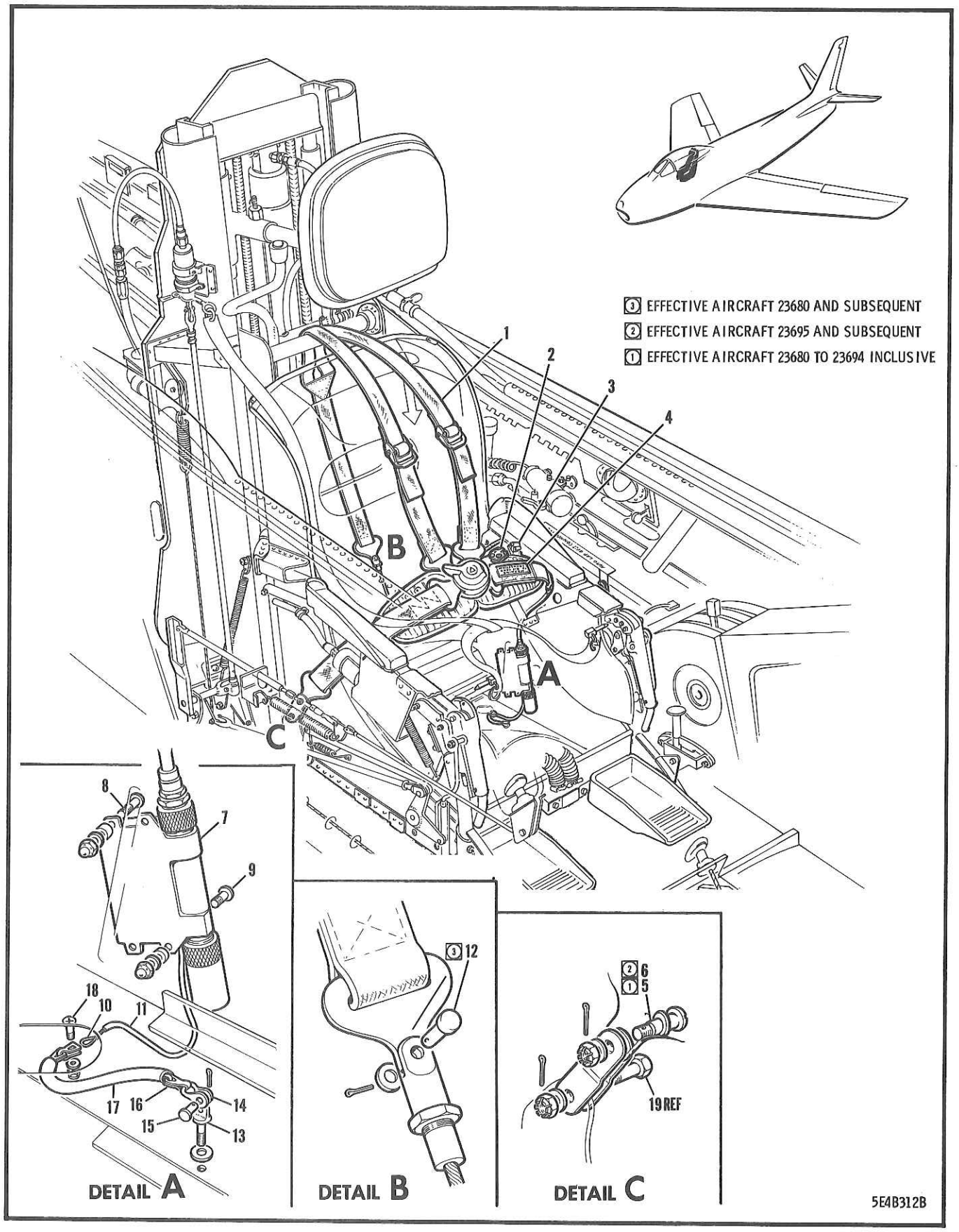

FIGURE 122 AUTO RELEASE MECHANISM

FIGURE AND INDEX NUMBER	GROUP / MAJOR ASSEMBLY / PART NUMBER	FURNISHINGS EQUIPMENT / AUTO RELEASE MECHANISM / 1234567 NOMENCLATURE	CODE	UNITS PER ASSY
122 -	13B-85001-952	MECHANISM INSTL - Z TYPE GQ HARNESS & AUTO RELEASE (SEE FIG. 120) (AS PER EO 05-5E-6A/213)	A22	NP
	13B-85001-950	MECHANISM INSTL - Z TYPE GQ HARNESS & AUTO RELEASE	680-701	NP
- 1	GQ1585	.HARNESS ASSY - Z TYPE GQ AUTO (GQP) (RCAF REF NO. 27L/10001) (G.F.E.)		1
- 2	RCAF 15E/63	.FASTENER - SNAP TYPE 100B (AS PER EO 55-45-6A/7)		1
	AN515-6R10	.SCREW - (FASTENER TO BELT ATTACHING)		1
	AN960-6	.WASHER -		2
	AN365-632A	.NUT -		1
- 3	13B-85001-111	.PLATE ASSY - AUTO RIP-CORD CONNECTION	A22	1
	13B-85001-109	.PLATE ASSY - AUTO RIP-CORD CONNECTION	680-701	1
	13B-85001-113	..PLATE - AUTO RIP-CORD CONNECTION	A22	1
	13B-85001-101	..PLATE - AUTO RIP-CORD CONNECTION	680-701	1
	13B-85001-103	..COVER - AUTO RIP-CORD CONN PLATE RED		2
	13B-85001-105	..CLIP - AUTO RIP-CORD CONNECTION		1
- 4	13B-85001-107	.PLACARD - AUTO RIP-CORD CONNECTION		1
- 5	NAS464-4-6	.BOLT - (LINK ATTACHING)	680-694	2
	2W18-416	.WASHER - FLAT (NAA)	680-694	2
	AN310-4	.NUT -	680-694	2
	AN380-2-3	.PIN -	680-694	2
- 6	AN24-10	.BOLT - (LINK UPPER ATTACHING)	695-	2
	2W18-416	.WASHER - FLAT (NAA)	695-	2
	AN960-416L	.WASHER -	695-	2
	AN310-4	.NUT -	695-	2
	AN380-2-3	.PIN -	695-	2
- 7	GQ192	.RELEASE MECHANISM - AUTO HARNESS (GQP) (RCAF REF NO. 12R/1217) (G.F.E.)		1
	RCAF REF 12C/293	.CARTRIDGE - .22 CAL RIM-FIRE (G.F.E.)		2
- 8	AN515-8R10	.SCREW - (RELEASE MECHANISM ATTACHING)		2
	NAS43-3-16	.SPACER - (BETWEEN BUCKET & MECHANISM)		2
	AN960PD8	.WASHER -		2
	22K2-82	.NUT - THIN HEXAGON METAL CAP (ESN)		2
- 9	AN515-8R8	.SCREW - (RELEASE MECHANISM ATTACHING)		2
	NAS43-3-8	.SPACER - (BETWEEN BUCKET & MECHANISM)		2
	AN960PD8	.WASHER -		2
	22K2-82	.NUT - THIN HEXAGON METAL CAP (ESN)		2
-10	13B-85001-951	.CABLE - GQ RELEASE		1
-11	13B-85001-953	.TUBE - (RELEASE CABLE COVERING) (AS PER EO 05-5E-6A/207)		1
-12	AN393-13	.PIN -	680-	1
	AN960C10L	.WASHER -	680-	1
	AN380-2-2	.COTTER-PIN -	680-	1
-13	AN42B4A	.EYE-BOLT - (AS PER EO 05-5E-6A/207)		1
-14	AN115-8	.SHACKLE - (AS PER EO 05-5E-6A/207)		1
-15	AN393-9	.PIN - (AS PER EO 05-5E-6A/207)		1
	AN380-2-1	.COTTER-PIN -		1
-16	13B-85001-955	.CHAIN - (SHACKLE TO ARMING WIRE ATTACHING)		1
-17	13B-85001-957	.TUBE - (CHAIN COVERING) (AS PER EO 05-5E-6A/207)		1
-18	AN515-8R8	.SCREW - (RELEASE CABLE TO CHAIN ATTACHING) (AS PER EO 05-5E-6A/207)		1
	AN960-8	.WASHER -		1
	AN364-832	.NUT -		1
-19	AN4-5	BOLT - (LINK LOWER ATTACHING) (SEE FIG.118)		REF

-000-

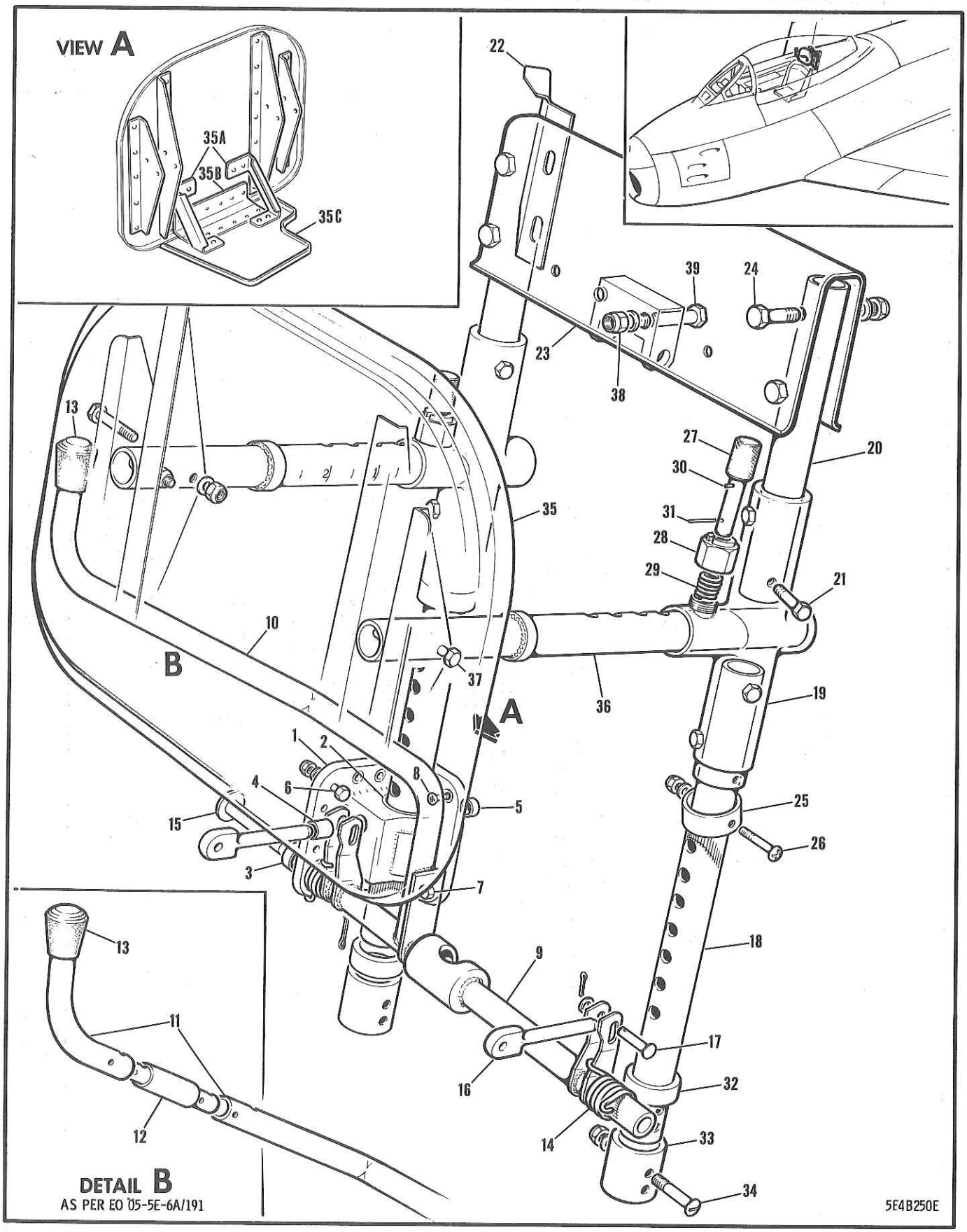

FIGURE 123 PILOT EJECTION SEAT HEADREST

FIGURE AND INDEX NUMBER	GROUP / MAJOR ASSEMBLY / PART NUMBER	FURNISHINGS EQUIPMENT / PILOT EJECTION SEAT HEADREST / 1234567 NOMENCLATURE	CODE	UNITS PER ASSY
123 -	170-53009-30	SEAT ASSY - PILOT EJECTION (SABRE 5) (SEE FIG. 118)		REF
	227-53009-800	SEAT ASSY - PILOT EJECTION (SEE FIG. 118)		REF
	170-53058-5	•FITTING ASSY - EJECTION SEAT ADJ SLIDE LH		1
- 1	170-53058-6	•FITTING ASSY - EJECTION SEAT ADJ SLIDE RH		1
- 2	170-53058-7	••BEARING - EJECTION SEAT ADJ SLIDE FITTING		1
- 3	4B19S5-005	••BUSHING - PRESS-FIT PLAIN (NAA)		1
- 4	170-53055-5	••BUSHING - EJECTION SEAT ADJUSTING PIN		1
- 5	170-53055-3	••BUSHING - EJECTION SEAT ADJUSTING PIN		1
- 6	AN3-5A	•BOLT -		10
- 7	AN3-4A	•BOLT -		4
- 8	AN509-10-9	•SCREW -		12
	AN960C10	•WASHER -	001-610	22
	2W18-10	•WASHER - FLAT (NAA)	611-	22
	AN365-1032	•NUT -		22
	170-53061-800	•SHAFT ASSY - (REPLACES 170-53061 AS PER EO 05-5E-6A/191)		1
	170-53061-802	••SHAFT ASSY - (REPLACES 170-53061-21 AS PER EO 05-5E-6A/191)		1
- 9	170-53061-3	•••SHAFT - EJECTION SEAT ADJ PIN OPERATING		1
-10		•••DELETED		
-11	170-53061-804	•••HANDLE - (REPLACES 170-53061-5 AS PER EO 05-5E-6A/191)		1
-12	170-53061-952	•••EXTENSION - EJECTION SEAT ADJ PIN OPR HANDLE (AS PER EO 05-5E-6A/191)		1
-13	16	••TIP - RUBBER (RCC)		1
-14	161-53062-1	•SPRING - PILOT EJECTION SEAT ADJUSTING LH		1
	161-53062-2	•SPRING - PILOT EJECTION SEAT ADJUSTING RH		1
-15	AN395-55	•PIN -		2
	AN380-3-4	•COTTER-PIN -		2
-16	170-53056	•PIN - EJECTION SEAT ADJUSTING		2
-17	AN393-17	•PIN - (ADJUSTING PIN TO SHAFT ATTACHING)		2
	AN960C10L	•WASHER -	001-610	2
	2W18-10M	•WASHER - FLAT (NAA)	611-	2
	AN380-2-2	•COTTER-PIN -		2
	170-53037-10	•CARRIER ASSY - EJECTION SEAT	001-370	1
	202-53095-800	•CARRIER ASSY - EJECTION SEAT (AS PER EO 05-5E-6A/113)	371-	1
-18	170-53037-5	••TUBE - EJECTION SEAT CARRIER MPI	001-370	2
	202-53095-5	••TUBE - EJECTION SEAT CARRIER	371-	2
-19	151-53169-5	••FITTING - PILOT HEADREST SUPPORT MPI		2
-20	170-53037-3	••TUBE - EJECTION SEAT CARRIER MPI	001-370	2
	202-53095-3	••TUBE - PILOT EJECTION SEAT CARRIER	371-	2
-21	AN3-15A	••BOLT - MPI		8
	AN960C10L	••WASHER -		8
	AN365-1032	••NUT -		8
-22	170-53045	••BEAM - EJECTION SEAT GUN ATTACHING		1
-23	13B-83013-5	••BRACKET - DISTRESS SIGNAL SW ACTUATING (AS PER EO 05-5E-6A/113)		1
-24	AN4-16A	••BOLT - MPI	001-370	3
	AN4-15A	••BOLT - MPI	001-370	1
	AN4-16A	••BOLT -	371-	4
	AN960C416L	••WASHER - (AS PER EO 05-5E-6B/10)	001-370	7
	AN960C416L	••WASHER -	371-	4
	AN365-428	••NUT -		4
-25	4B19S16-016	••BUSHING - PRESS-FIT PLAIN (NAA)	001-370	2
	202-53095-11	••SPACER - EJECTION SEAT CARRIER	371-	2
-26	NAS221-25	••SCREW -	001-370	2

FIGURE AND INDEX NUMBER	GROUP	FURNISHINGS EQUIPMENT	CODE	UNITS PER ASSY
	MAJOR ASSEMBLY	PILOT EJECTION SEAT HEADREST		
	PART NUMBER	1234567 NOMENCLATURE		
123 -	NAS221-26	••SCREW -	371-	2
	AN960-10L	••WASHER -		2
	AN365-1032	••NUT -		2
	151-53164	•LATCH ASSY - PILOT ADJUSTABLE HEADREST		2
-27	151-53162	••PIN - PILOT ADJUSTABLE HEADREST LATCH		1
-28	151-53160	••NUT - PILOT ADJUSTABLE HEADREST LATCH		1
-29	147-43069	••SPRING - PILOT HEADREST ADJUSTING LATCH		1
-30	151-53164-3	••PIN - PILOT ADJUSTABLE HEADREST LATCH		1
-31	151-53164-5	••PIN - PILOT ADJUSTABLE HEADREST LATCH		1
-32	4B19S16-016	•BUSHING - PLAIN PRESS-FIT (NAA)		2
-33	170-53053	•STOP - EJECTION SEAT CARRIER		2
-34	AN23-25A	•BOLT -		4
	AN960C10	•WASHER -	001-610	4
	2W18-10	•WASHER - FLAT (NAA)	611-	4
	AN365-1032	•NUT -		4
-35	176-53164	•HEADREST ASSY - EJECTION SEAT (COMPLETE)	001-370	1
	176-53164-10	•HEADREST ASSY - EJECTION SEAT (COMPLETE)	371-610	1
	176-53164-21	•HEADREST ASSY - EJECTION SEAT (COMPLETE)	611-	1
	176-53163-10	••PAD - EJECTION SEAT HEADREST		1
	170-53163	••HEADREST ASSY - EJECTION SEAT	001-610	1
	170-53163-21	••HEADREST ASSY - EJECTION SEAT	611-	1
-35A	170-53163-9	••ANGLE - (AS PER EO 05-5E-6A/239)		1
	170-53163-10	••ANGLE - (AS PER EO 05-5E-6A/239)		1
-35B	170-53163-11	••ANGLE - (AS PER EO 05-5E-6A/239)		1
-35C	202-53165	••GUIDE - (AS PER EO 05-5E-6A/239)		1
-36	170-53158-5	••TUBE - HEADREST SEAT ADJUSTING LH	001-370	1
	176-53165-1	••TUBE ASSY - SEAT HEADREST ADJUSTING LH		1
	170-53158-6	••TUBE - HEADREST SEAT ADJUSTING RH	001-370	1
	176-53165-2	••TUBE ASSY - SEAT HEADREST ADJUSTING RH	371-	1
-37	AN3-13A	••BOLT -		4
	AN960D10	••WASHER -		4
-38	AN365-1032	••NUT -		4
	170-53057	•FITTING - EJECTION SEAT GUN UPPER ATT		1
-39	AN4-15A	•BOLT -	001-610	2
	AN4-15A	•BOLT -	611-	1
	AN4-21A	•BOLT -	611-	1
	AN960C416	•WASHER -	001-610	2
	2W18-416	•WASHER - FLAT (NAA)	611-	2
	AN365-428	•NUT -		2

-000-

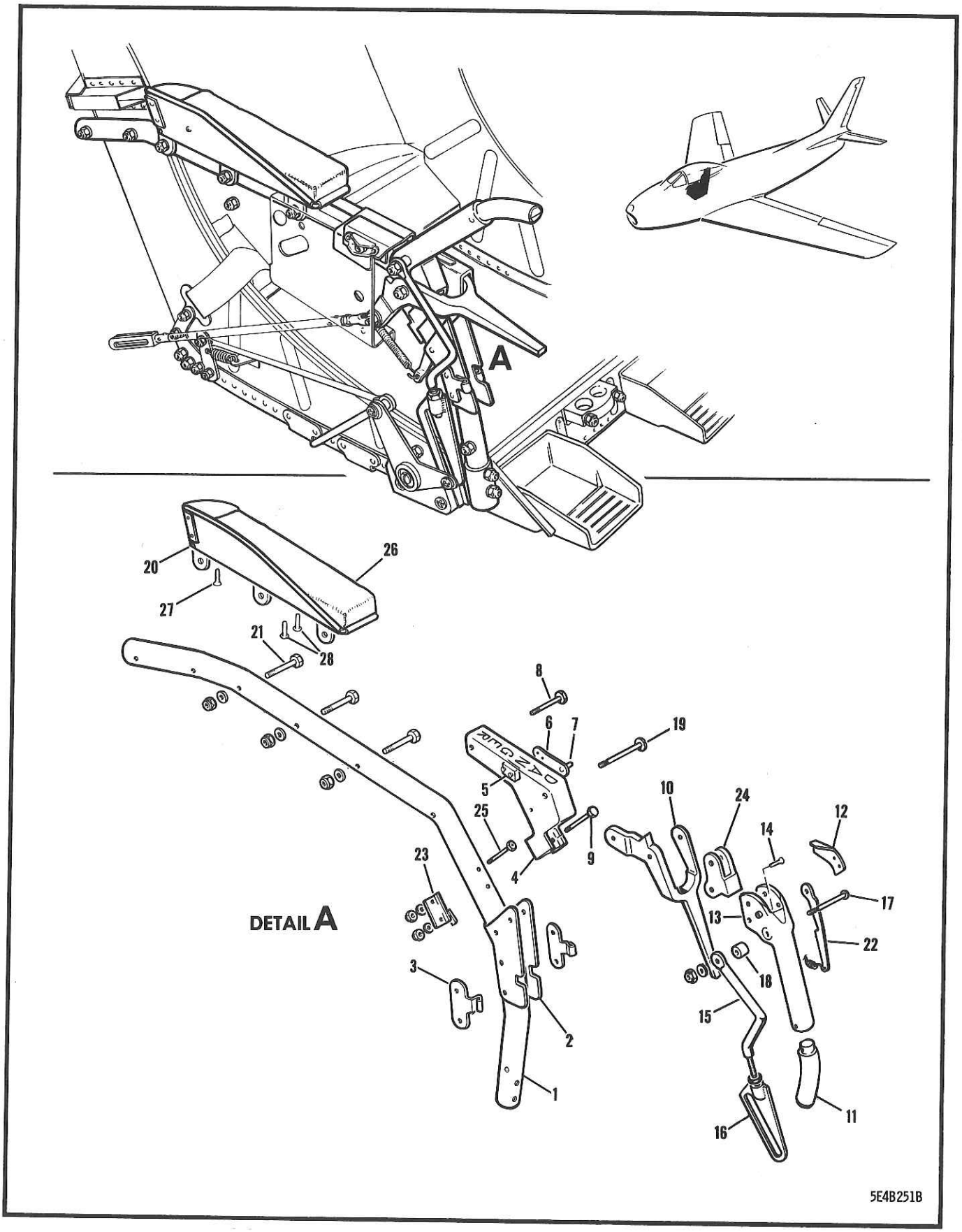

FIGURE 124 PILOT EJECTION SEAT ARMREST

FIGURE AND INDEX NUMBER	GROUP FURNISHINGS EQUIPMENT MAJOR ASSEMBLY PILOT EJECTION SEAT ARMREST PART NUMBER	1234567 NOMENCLATURE	CODE	UNITS PER ASSY
124 -	172-53130-803	ARMREST ASSY - EJECTION SEAT LH (SABRE 6) (COMPLETE) (SEE FIG. 118) (AS PER EO 05-5E-6B/15 & 05-5E-6B/10)		1
	172-53130-804	ARMREST ASSY - EJECTION SEAT RH (SABRE 6) (COMPLETE) (SEE FIG. 118) (AS PER EO 05-5E-6B/15 & 05-5E-6B/10)		1
	170-53046-1	•TUBE - PILOT EJECTION SEAT ARMREST LH		1
- 1	170-53046-2	•TUBE - PILOT EJECTION SEAT ARMREST RH		1
- 2	170-53041-3	•GUARD - PILOT EJECTION SEAT TRIGGER		1
	202-53087-1	•SPRING - PILOT EJECTION SEAT TRIGGER RTNG LH (PORT & STARBOARD SIDE)		1
- 3	202-53087-2	•SPRING - PILOT EJECTION SEAT TRIGGER RTNG RH (PORT & STARBOARD SIDE)		1
- 4	140-53094-802	•SUPPORT - PILOT EJ SEAT ARMREST HANDLE		1
- 5	172-53130-950	•BLOCK - EJECTION SEAT ARMREST		1
	151-53071	•SPRING ASSY - PILOT EJ SEAT HANDLE LOCK		1
- 6	151-53070	••SPRING - PILOT EJECTION SEAT HANDLE LOCK		1
- 7	140-53029	••PIN - PILOT EJECTION SEAT TRIGGER HANDLE		1
- 8	AN3-13A	•BOLT -		1
	AN960D10	•WASHER -		1
- 9	AN3-13A	•BOLT -		1
	AN960D10	•WASHER -		1
	AN365-1032	•NUT -		1
	202-53097-801	•TRIGGER - EJECTION SEAT GUN LH		1
-10	202-53097-802	•TRIGGER - EJECTION SEAT GUN RH		1
	172-53129-11	•HANDLE ASSY - EJ SEAT CANOPY INITIATOR FIRING LH		1
	172-53129-12	•HANDLE ASSY - EJ SEAT CANOPY INITIATOR FIRING RH		1
	172-53128-951	••HANDLE ASSY - EJ SEAT CANOPY INITIATOR FIRING LH (AS PER EO 05-5E-6A/98)		1
	172-53128-952	••HANDLE ASSY - EJ SEAT CANOPY INITIATOR FIRING RH (AS PER EO 05-5E-6A/98)		1
-11	151-318142	•••HANDLE - PILOT EMY CANOPY REL EXTENSION		1
	172-53114-1	•••RELEASE - EJ SEAT FIRING SEQ LATCH LH		1
-12	172-53114-2	•••RELEASE - EJ SEAT FIRING SEQ LATCH RH		1
-13	172-53128-7	•••STOP - EJ SEAT CANOPY INITIATOR FIRING HANDLE (AS PER EO 05-5E-6A/98)		1
-14	AN509-10R6	•••SCREW - (AS PER EO 05-5E-6A/98)		1
	202-31876-1	••LINK - COCKPIT ENCLOSURE CANOPY EMERGENCY RELEASE ROD LH		1
-15	202-31876-2	••LINK - COCKPIT ENCLOSURE CANOPY EMERGENCY RELEASE ROD RH		1
	202-31879-1	••END ASSY - COCKPIT ENCLOSURE EMERGENCY CANOPY RELEASE ROD LINK LH		1
-16	202-31879-2	••END ASSY - COCKPIT ENCLOSURE EMERGENCY CANOPY RELEASE ROD LINK RH		1
-17	AN23-30A	••BOLT -		1
	NAS43DD-3-40	••SPACER -		1
-18	NAS43DD-5-32	••SPACER -		1
	2W1AL-13-12-40	••WASHER - PLAIN (NAA)		1
	AN316-428	••NUT -		1
-19	202-53040	•BOLT - PILOT EJECTION SEAT HANDLE		1
	AN960D10	•WASHER -		1
	AN365-1032	•NUT -		1
	151-53085-1	•ARMREST ASSY - PILOT EJECTION SEAT LH		1
	151-53085-2	•ARMREST ASSY - PILOT EJECTION SEAT RH		1
	151-53085-3	••BRACKET - PILOT EJECTION SEAT ARMREST LH		1
-20	151-53085-4	••BRACKET - PILOT EJECTION SEAT ARMREST RH		1
	151-53085-6	••WIRE - PILOT EJECTION SEAT ARMREST		1

FIGURE AND INDEX NUMBER	GROUP FURNISHINGS EQUIPMENT MAJOR ASSEMBLY PILOT EJECTION SEAT ARMREST PART NUMBER	1234567 NOMENCLATURE	CODE	UNITS PER ASSY
124 -	151-53085-5	••CLIP - PILOT EJECTION SEAT ARMREST		1
-21	AN3-12A	•BOLT -		1
	2W18-10	•WASHER - FLAT (NAA)		1
	AN365-1032	•NUT -		1
	172-53111-1	•LATCH - EJECTION SEAT FIRING SEQUENCING LH		1
-22	172-53111-2	•LATCH - EJECTION SEAT FIRING SEQUENCING RH		1
	NAS42C5-22	•SPACER -		1
	NAS42C10-8	•SPACER -		2
	172-53112-1	•STOP ASSY - EJ SEAT FIRING SEQ LATCH LH		1
-23	172-53112-2	•STOP ASSY - EJ SEAT FIRING SEQ LATCH RH		1
	172-53113-1	•BRACKET - EJECTION SEAT FIRING SEQUENCING LATCH LH		1
-24	172-53113-2	•BRACKET - EJECTION SEAT FIRING SEQUENCING LATCH RH		1
-25	AN3-11A	•BOLT -		1
	AN960D10	•WASHER -		1
	AN365-1032	•NUT -		1
	140-53024-31	•CUSHION ASSY - PILOT EJ SEAT ARMREST LH		1
-26	140-53024-32	•CUSHION ASSY - PILOT EJ SEAT ARMREST RH		1
-27	NAS205-10	•SCREW - (CUSHION ATTACHING)		1
-28	NAS221-10	•SCREW - (CUSHION ATTACHING)		2
		-000-		

SECTION 7

FLIGHT CONTROLS

TABLE OF CONTENTS

FIGURE	TITLE	PAGE
125	CENTRE WING SURFACE CONTROL	594
126	AILERON FORWARD SURFACE CONTROL	598
127	PILOT CONTROL STICK	602
128	OUTER WING SURFACE CONTROL	604
129	AILERON CONTROL OPERATING MECHANISM	608
130	FORWARD FUSELAGE SURFACE CONTROL	612
131	HORIZONTAL STABILIZER CONTROL MECHANISM	616
132	REAR FUSELAGE SURFACE CONTROL	620
133	HORIZONTAL STABILIZER REAR CONTROL BELL-CRANK	624
134	HORIZONTAL STABILIZER CONTROL ARTIFICIAL FEEL	626
135	RUDDER FORWARD SURFACE CONTROL	630
136	PILOT RUDDER & BRAKE PEDAL	634
137	RUDDER REAR SURFACE CONTROL	638
138	FORWARD EMERGENCY CHANGE-OVER (EFFECTIVE AIRCRAFT 23001 TO 23210 INCL)	640
139	REAR EMERGENCY CHANGE-OVER (EFFECTIVE AIRCRAFT 23001 TO 23210 INCL)	644

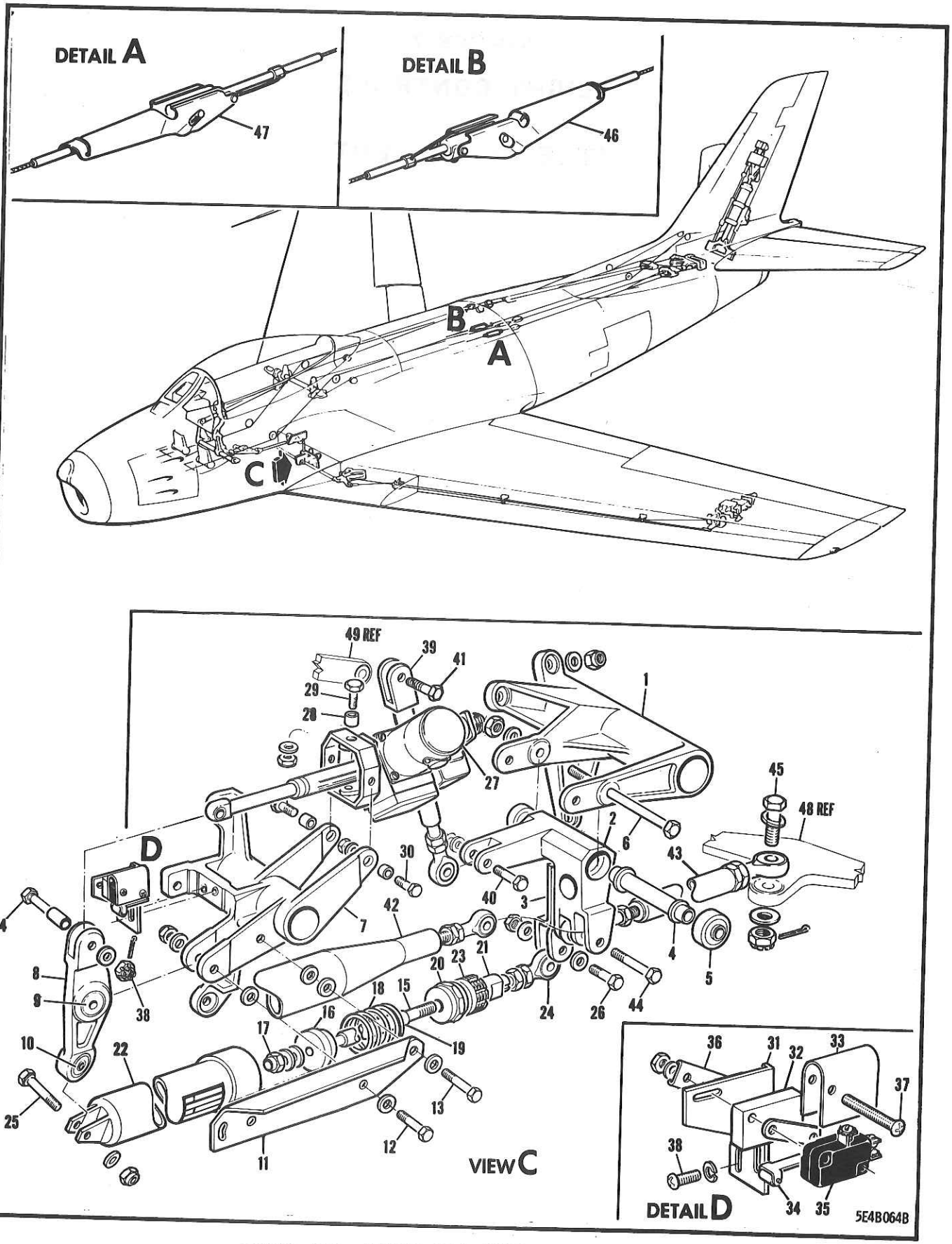

FIGURE 125 CENTRE WING SURFACE CONTROL

FIGURE AND INDEX NUMBER	GROUP FLIGHT CONTROLS MAJOR ASSEMBLY CENTRE WING SURFACE CONTROL PART NUMBER	1234567 NOMENCLATURE	CODE	UNITS PER ASSY
125 -	170-52013	SURFACE CONTROL INSTL - WING CENTRE SECTION (SEE SECTION 1)		NP
- 1	170-52320	.SUPPORT - AILERON CTL W/CTR/SECT BELCRK		1
	AN960D416	.WASHER -		3
	AN365-428	.NUT -		3
	176-52322	.BELL-CRANK ASSY - AILERON CONTROL		1
	176-52322-5	..BELL-CRANK ASSY - AILERON CONTROL		1
- 2	176-52322-3	...BELL-CRANK - AILERON CONTROL		1
- 3	172-52354	...FORK ASSY - BELL-CRANK		1
- 4	4S7-5-2.438	..SPACER - FLANGED DUAL BEARING (NAA)		1
- 5	AN200KP4	..BEARING -		2
- 6	AN174-44A	.BOLT - MPI (BELL-CRANK TO SUPPORT ATT)		1
	AN960D416	.WASHER -		1
	AN365-428	.NUT -		1
- 7	165-52334	.SUPPORT ASSY - AILERON CONTROL ARTIFICIAL FEEL BUNGEE		1
	RD104SH-5L	..INSERT - LOCKED-IN (ROS)		2
	RL21SB-6	..LOCK-RING - STANDARD (ROS)		2
	AN960D416	.WASHER -		3
	AN365-428	.NUT -		3
	165-52346-5	.BELL-CRANK ASSY - AILERON CTL ARTIFICIAL FEEL BUNGEE ACTE	001-490	1
	165-52346-805	.BELL-CRANK ASSY - AILERON CTL ARTIFICIAL FEEL BUNGEE ACTE	491-	1
- 8	165-52346-3	..BELL-CRANK - AILERON CONTROL BUNGEE ACTE	001-490	1
	165-52346-903	..BELL-CRANK - AILERON CONTROL BUNGEE ACTE	491-	1
- 9	AN207DP4	..BEARING -		1
-10	AN206DS3	..BEARING -		1
-11	170-68747	.ANGLE - EMY JETTISON CABLE W/CTR/SECT ATT	001-210	1
-12	AN174-16A	.BOLT - MPI (SUPPORT TO ANGLE ATTACHING)	001-210	1
	AN174-15A	.BOLT - MPI (SUPPORT TO ANGLE ATTACHING)	211-	1
	AN960D416	.WASHER -		1
	AN365-428	.NUT -		1
-13	AN3-6A	.BOLT - (SUPPORT TO ANGLE ATTACHING)	001-210	1
	AN960D10L	.WASHER -	001-210	6
	AN365-1032	.NUT -	001-210	1
-14	AN174-15	.BOLT - MPI (BELL-CRANK TO ACTUATOR ATT)		1
	4B21-S4-016	.BUSHING - SPACER (NAA)		1
	AN960D416	.WASHER -		1
	AN310-4	.NUT -		1
	AN380-2-3	.COTTER-PIN -		1
	165-52337-801	.BUNGEE ASSY - AILERON CTL ARTIFICIAL FEEL (AS PER EO 05-5E-6A/192)		1
-15	165-52345-3	..PISTON-ROD - ARTIFICIAL FEEL BUNGEE		1
-16	201-52301	..PISTON - ARTIFICIAL FEEL BUNGEE (AS PER EO 05-5E-6A/192)		1
	2W1AL18-22-063	..WASHER - PLAIN (NAA)		1
	2W1AL18-22-032	..WASHER - PLAIN (NAA)		1
-17	AN310-4	..NUT -		1
	AN380-2-3	..COTTER-PIN -		1
-18	170-52329	..SPRING - COMPRESSION		1
-19	165-523118	..STOP - ARTIFICIAL FEEL BUNGEE		1
-20	201-52301-3	..PISTON - ARTIFICIAL FEEL BUNGEE (AS PER EO 05-5E-6A/192)		1
-21	165-52342	..NUT - ARTIFICIAL FEEL BUNGEE ADJUSTING		1
	AN380-2-3	..COTTER-PIN -		1
-22	165-52338	..HOUSING - ARTIFICIAL FEEL BUNGEE		1
-23	165-52339	..NUT - ARTIFICIAL FEEL BUNGEE		1
	AN316-5R	..CHECK-NUT -		1
-24	165-52008	..ROD-END - SURFACE CONTROL BEARING		1

FIGURE AND INDEX NUMBER	GROUP FLIGHT CONTROLS MAJOR ASSEMBLY CENTRE WING SURFACE CONTROL PART NUMBER	1234567 NOMENCLATURE	CODE	UNITS PER ASSY
125 -	AN380-2-3	••COTTER-PIN -		1
-25	AN173-11A	•BOLT - MPI (BELL-CRANK TO HOUSING ATT)		1
	AN960D10	•WASHER -		1
	AN365-1032	•NUT -		1
-26	NAS464-4-14	•BOLT - MPI (HOUSING TO BELL-CRANK ATT)		1
		OR		1
	AN174-12	•BOLT - (HOUSING TO BELL-CRANK ATTACHING)		
	AN960D416L	•WASHER -		
	AN320-4	•NUT -		1
	AN380-2-2	•COTTER-PIN -		1
	165-547133	•ACTUATOR ASSY - AILERON TRIM ELECTRICAL		1
-27	31586-1	•• ACTUATOR ASSY - LINEAR (AIR)		1
		(FOR BREAKDOWN SEE EO 40-80HP-3)		1
-28	165-523183	••GIMBAL - TRIM ACTUATOR		
	4B19-B4-005	••BUSHING - PLAIN PRESS-FIT (NAA)		1
	4B21-B4-005	••BUSHING - PLAIN PRESS-FIT (NAA)	001-300	4
-29	NAS464-4-4	••BOLT - (GIMBAL TO ACTUATOR ATTACHING)	301-	4
	NAS464-4A-4	••BOLT - (GIMBAL TO ACTUATOR ATTACHING)	001-100	2
	AN960D416L	••WASHER -	101-	2
	AN364-428	••NUT -		2
-30	NAS464-4A-4	•BOLT - MPI (SUPPORT TO ACTUATOR ATTACHING)		2
	AN960D416L	•WASHER -		2
	AN364-428	•NUT -		2
	165-54757	•SWITCH ASSY - AILERON NEUTRAL POSITION IND		2
-31	172-54711	••BRACKET - SWITCH		1
-32	165-547118	••SPACER - SWITCH		1
-33	170-54763	••INSULATOR - ELECTRICAL SWITCH		1
-34	JV5	••ACTUATOR - V3 SWITCH (MSC)		1
-35	AN3234-1	••SWITCH - CLASS E LIMIT		1
-36	165-547134	••CLIP - SWITCH		1
-37	AN515-4R18	••SCREW - (ACTUATOR & SWITCH TO INS ATT)		1
	AN960D4	••WASHER -		2
	AN960D4	••WASHER -	001-200	2
	AN365-440	••NUT -	201-	4
-38	AN515-8R10	•SCREW - (SWITCH TO SUPPORT ATTACHING)		2
	AN960D8	•WASHER -		2
	AN935-8	•LOCK-WASHER -		2
	176-52001	SURFACE CONTROLS INSTL - COMPL (SEE FIG. 1)		2
-39	170-52304	•CONNECTING ROD ASSY - AILERON CONTROL		NP
		FUSELAGE TO WING		1
	170-52304-3	••CONNECTING ROD ASSY -		
	170-52304-5	•••TUBE - CONNECTING ROD		1
	151-52363	•••FORK - CONNECTING ROD		1
	140-52346	•••ROD-END - CONTROL		1
	RE4F5	••ROD-END - DOUBLE-ROW SELF-ALIGNING		1
		BEARING (FBC)		1
	AN316-5R	••CHECK-NUT -		
-40	AN174-13A	•BOLT - (BELL-CRANK TO ACTUATOR ATTACHING)		1
	AN960D416	•WASHER -		1
	AN365-428	•NUT -		1
-41	NAS464-4-14	•BOLT - (ROD TO BELL-CRANK ATTACHING)		1
	AN960D416L	•WASHER -		1
	AN320-4	•NUT -		1
	AN380-2-2	•COTTER-PIN -		1
-42	170-52323	•ROD ASSY - AILERON CONTROL W/CTR/SECT		1
		(STARBOARD SIDE)		1
	170-52323-3	••ROD ASSY - AILERON CONTROL		
	170-52323-5	•••TUBE - CONTROL ROD		1
	159-52117-17	•••PLUG - ROD-END & TUBE RIVET		1
	159-52220-11	•••END - THREADED TUBE MPI		2
				2

FIGURE AND INDEX NUMBER	GROUP FLIGHT CONTROLS MAJOR ASSEMBLY CENTRE WING SURFACE CONTROL PART NUMBER	1234567 NOMENCLATURE	CODE	UNITS PER ASSY
125 -	RE4F5	•••ROD-END - DOUBLE-ROW SELF-ALIGNING BEARING (FBC)		1
	AN316-5R	•••CHECK-NUT -		1
	RE4F5	••ROD-END - DOUBLE-ROW SELF-ALIGNING BEARING (FBC)		1
	AN316-5R	••CHECK-NUT -		1
-43	170-52319	•ROD ASSY - AILERON CONTROL W/CTR/SECT (PORT SIDE)		1
	170-52319-3	••ROD ASSY - AILERON CONTROL		1
	170-52319-5	•••TUBE - CONTROL ROD		2
	159-52220-5	•••END - THREADED TUBE MPI		1
	RE4F5	•••ROD-END - DOUBLE-ROW SELF-ALIGNING BEARING (FBC)		1
	AN316-5R	•••CHECK-NUT -		1
	RE4F5	••ROD-END - DOUBLE-ROW SELF-ALIGNING BEARING (FBC)		1
	AN316-5R	••NUT -		1
-44	AN174-24	•BOLT - (AS PER EO 05-5E-6A/17) (ROD TO BELL-CRANK ATTACHING)		1
	AN960D416	•WASHER -		1
	AN310-4	•NUT - (AS PER EO 05-5E-6A/17)		1
	AN380-2-3	•COTTER-PIN - (AS PER EO 05-5E-6A/17)		2
-45	NAS464-4-14	•BOLT - (ROD TO BELL-CRANK ATTACHING)		2
	AN960D416	•WASHER -		2
	AN960D416L	•WASHER -		2
	AN320-4	•NUT -		2
	AN380-2-3	•COTTER-PIN -		2
	AN742D9C	•CLAMP -	A26	8
	AN742D7	•CLAMP -	A27	8
	AN742-6	•CLAMP -	371-	8
	NAS42DD-6-32	•SPACER -	A27	6
	NAS43DD-3-32	•SPACER -	371-	6
	AN515-8R8	•SCREW - (CLAMP ATTACHING)	A26	8
	AN515-8R8	•SCREW - (CLAMP ATTACHING)	A27	2
	AN520-10R10	•SCREW - (CLAMP ATTACHING)	371-	2
	AN515-8R12	•SCREW - (CLAMP ATTACHING)	A27	6
	AN520-10R12	•SCREW - (CLAMP ATTACHING)	371-	6
	AN960D8L	•WASHER -	001-370	8
	AN960-10L	•WASHER -	371-	8
	AN365-832	•NUT -	001-370	8
	AN365-1032	•NUT -	371-	8
-46	D6-1001-5N	•LOCK ASSY - (PSC) (RUDDER CONTROL CABLE QUICK RELEASE)		2
-47	D6-1001-3N	•LOCK ASSY - (PSC) (STABILIZER CONTROL CABLE QUICK RELEASE)		4
-48	165-52321-5	BELL-CRANK ASSY - AILERON CONTROL WOP INBD (SEE FIG. 128)		REF
-49	13-91015	ARM ASSY - AILERON CONTROL BELL-CRANK (SEE FIG. 126)		REF
		(CONTINUED SEE FIG. 130)		

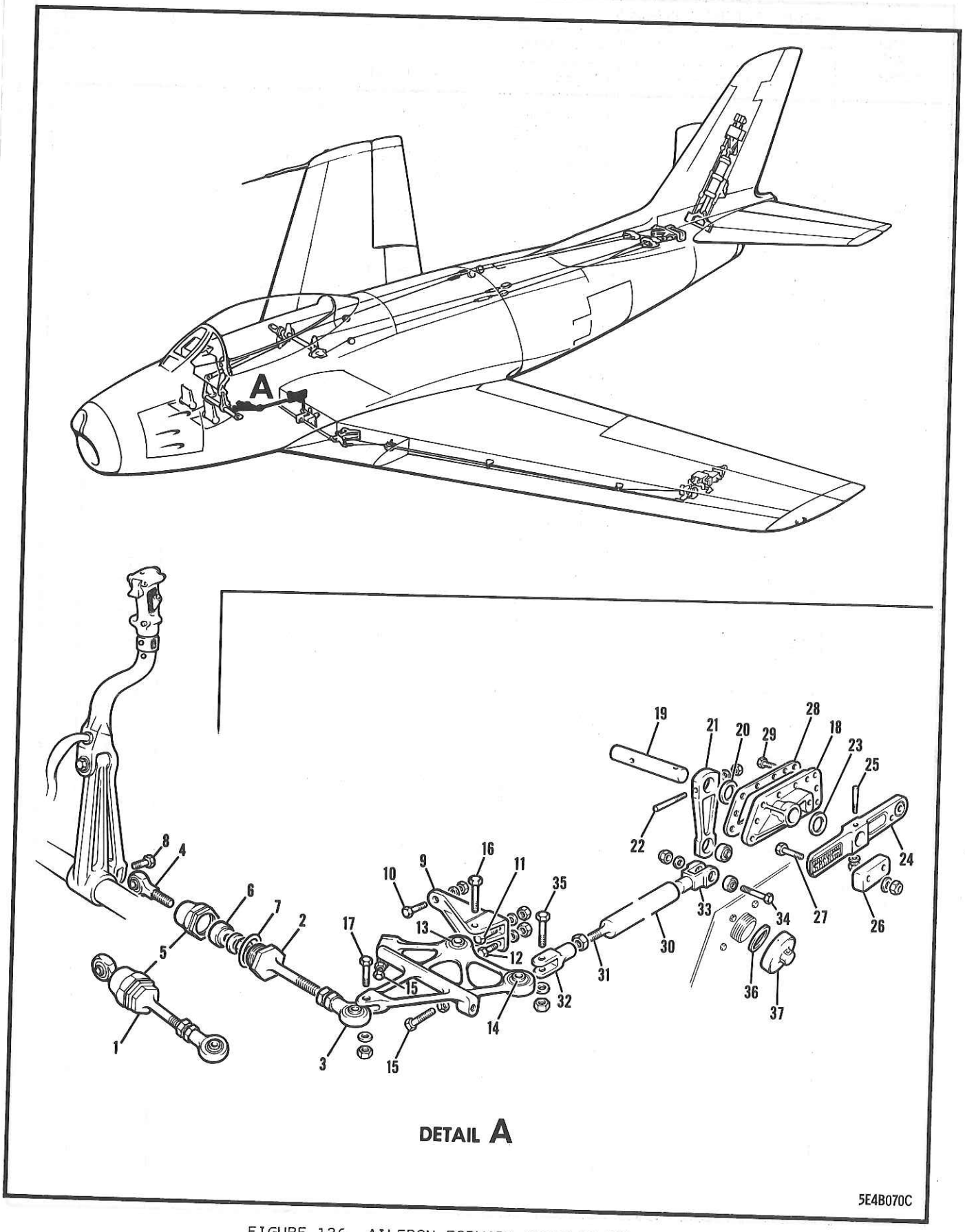

FIGURE 126 AILERON FORWARD SURFACE CONTROL

FIGURE AND INDEX NUMBER	GROUP FLIGHT CONTROLS MAJOR ASSEMBLY AILERON FORWARD SURFACE CONTROL PART NUMBER	1234567 NOMENCLATURE	CODE	UNITS PER ASSY
126 -	176-52031	SURFACE CONTROL INSTL - FUSELAGE FORWARD (SEE FIG. 130)		REF
- 1	140-52301	•LINK ASSY - AILERON CONTROL (SWIVEL) (PORT SIDE)		1
- 2	140-52304	••ROD - SWIVEL LINK		1
	AN316-5R	••CHECK-NUT -		1
- 3	165-52008	••ROD-END - CONTROL LINK BEARING		1
	AN380-2-2	••COTTER-PIN -		1
- 4	140-52302	••BEARING ASSY - SWIVEL LINK		1
	AN200KS4	•••BEARING -		1
- 5	140-52303	••RETAINER - SWIVEL LINK BEARING		1
- 6	AN207D4	••BEARING -		1
	AN960-416L	••WASHER -		1
	AN310-4	••NUT -		1
	AN380-2-2	••COTTER-PIN -		1
- 7	AN996-18	••RING -		1
- 8	AN174-14A	•BOLT - MPI (LINK TO PIVOT ATTACHING)		1
	AN960D416	•WASHER -		1
	AN365-428	•NUT -		1
	AN380-2-2	•COTTER-PIN -		1
- 9	140-52316	•BRACKET - AILERON CONTROL COCKPIT BELL-CRANK (PORT SIDE)		1
-10	AN4-6A	•BOLT - MPI (BRACKET ATTACHING)		1
	AN960D416	•WASHER -		1
	AN365-428	•NUT -		1
-11	AN3-5A	•BOLT - MPI (BRACKET ATTACHING)		1
-12	AN3-7A	•BOLT - MPI (BRACKET ATTACHING)		2
	AN960D10	•WASHER -		2
	AN365-1032	•NUT -		1
	140-52305	•BELL-CRANK ASSY - AILERON CONTROL COCKPIT (PORT SIDE)		1
-13	DW5	••BALL-BEARING - WIDE DOUBLE-ROW (FBC)		1
-14	AN206DS4	••BEARING -		2
-15	5B2-11	••BOLT - ADJUSTING (NAA)		2
	AN316-4R	••CHECK-NUT -		1
-16	AN175-20	•BOLT - MPI (BELL-CRANK TO BRACKET ATT)		1
	AN960D516	•WASHER -		1
	AN310-5	•NUT -		1
	AN380-3-3	•COTTER-PIN -		1
-17	NAS464-4-19	•BOLT - MPI (LINK TO BELL-CRANK ATTACHING)		1
	AN960D416	•WASHER -		1
	AN320-4	•NUT -		1
	AN380-2-2	•COTTER-PIN -		1
	170-52331	•BELL-CRANK ASSY - AILERON CONTROL FUSELAGE STA 119 (PORT SIDE)		1
-18	151-52309	••SUPPORT ASSY - AILERON CONTROL BELL-CRANK FUSELAGE STA 119		2
	AN201K12A	•••BEARING -		1
-19	140-52313	••TORQUE TUBE - AILERON CONTROL		1
-20	2W1-49-30-032	••WASHER - PLAIN (NAA)		1
-21	151-52325	••ARM ASSY - BELL-CRANK FUS STA 119 INBOARD		1
	AN206DS4	•••BEARING -		AR
	2W1-49-30-005	••WASHER - PLAIN (NAA)		AR
	2W1-49-30-010	••WASHER - PLAIN (NAA)		1
-22	AN386-2-10	••PIN - MPI		1
	AN975-3	••WASHER -		1
	AN320-3	••NUT -		1
	AN380-2-2	••COTTER-PIN -		1
-23	2W1-49-30-032	••WASHER - PLAIN (NAA)		1
-24	13-91015	••ARM ASSY - BELL-CRANK		

FIGURE AND INDEX NUMBER	GROUP FLIGHT CONTROLS MAJOR ASSEMBLY AILERON FORWARD SURFACE CONTROL PART NUMBER	1234567 NOMENCLATURE	CODE	UNITS PER ASSY
126 -	AN206DS4	•••BEARING -		1
	2W1-49-30-005	••WASHER - PLAIN (NAA)		AR
	2W1-49-30-010	••WASHER - PLAIN (NAA)		AR
-25	AN386-2-10	••PIN -		1
	AN975-3	••WASHER -		1
	AN320-3	••NUT -		1
	AN380-2-2	••COTTER-PIN -		1
-26	151-523109	••BALANCE-WEIGHT - AILERON CONTROL	001-668	1
	151-523109-NAVY-L-16	••BALANCE-WEIGHT - AILERON CONTROL	669-	1
-27	AN3-13A	••BOLT - MPI (WEIGHT TO ARM ATTACHING)		2
	2W18-10	••WASHER - FLAT (NAA)		2
	AN365-1032	••NUT -		2
-28	140-52383-5	•GASKET - AILERON CTL TORQUE TUBE SUPPORT		1
-29	AN3-6A	•BOLT - MPI (SUPPORT ATTACHING)		13
	151-52303	•ROD ASSY - AILERON CONTROL FORWARD PUSH-PULL (PORT SIDE)		1
-30	151-52303-3	••TUBE - CONTROL ROD		1
-31	140-52307	••ROD-END - CONTROL		1
-32	140-52308	••FORK - CONTROL ROD		1
	AN316-6R	••CHECK-NUT -		1
-33	140-52309	••FORK ASSY - CONTROL ROD FIXED		1
	42D10-048	•••NUT - SPLINE (ESN)		1
-34	AN174-12A	•BOLT - MPI (ROD TO ARM ATTACHING)		1
-35	AN174-13A	•BOLT - MPI (ROD TO BELL-CRANK)		1
	AN960D416	•WASHER -		3
	AN365-428	•NUT -		3
-36	AN6227B26	•PACKING -		1
-37	140-52315	•CAP - AILERON CONTROL ACCESS SEALING		1
		(CONTINUED SEE FIG. 135)		

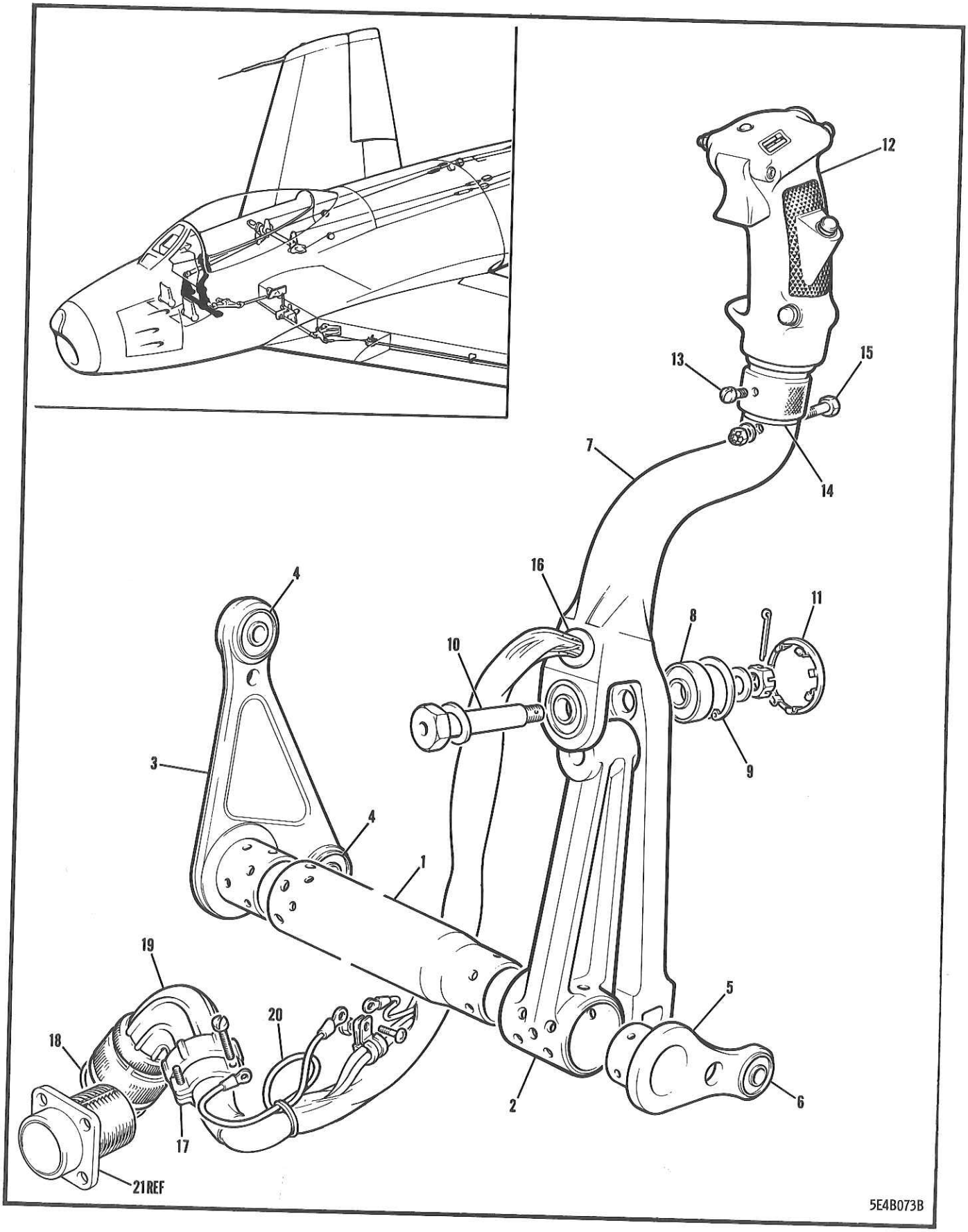

FIGURE 127 PILOT CONTROL STICK

FIGURE AND INDEX NUMBER	GROUP FLIGHT CONTROLS MAJOR ASSEMBLY PILOT CONTROL STICK PART NUMBER	1234567 NOMENCLATURE	CODE	UNITS PER ASSY
127 -	170-52101	CONTROL STICK ASSY - PILOT (SEE FIG. 130)		1
	170-52101-3	•BASE ASSY - PILOT CONTROL STICK		1
- 1	140-52108	••TORQUE TUBE - PILOT CONTROL STICK		1
- 2	152-52104-5	••BASE - PILOT CONTROL STICK (MAKE FROM 152-52104)		1
	152-52102-5	••HORN ASSY - PILOT CONTROL STICK ELEVATOR		1
- 3	152-52102-3	•••HORN - PILOT CONTROL STICK (MAKE FROM 152-52102)		1
- 4	AN200K4	•••BEARING -		2
- 5	140-52107	••PIVOT ASSY - PILOT CONTROL STICK		1
- 6	AN201K4A	•••BEARING -		1
- 7	170-52103	•CONTROL STICK ASSY - PILOT		1
- 8	AN201K10A	••BEARING -		2
- 9	NAS50-137	••RING -		1
-10	140-52102	•PIN - PILOT CONTROL STICK PIVOT MPI		1
	2W2SP21-28-62	•WASHER - THRUST (NAA)		1
	AN320-5	•NUT -		1
	AN380-2-2	•COTTER-PIN -		1
-11	48132	•BUTTON - STANDARD TYPE PLUG (UCF)		1
-12	SPEC X50C4064	•GRIP ASSY - CONTROL STICK (GEM) OR (PHC) (SUPPLIED WITH COUPLING ASSY & PLUG)		1
-13	AN502-10-4	•SCREW - (GRIP SECURING)		1
-14	AF20-29	•GROMMET -		1
-15	AN3H15A	•BOLT - (GRIP PLUG TO STICK ATTACHING)		1
	AN960D10	•WASHER -		2
	AN365-1032	•NUT -		1
-16	AN931B7-11	•GROMMET -	001-100	1
	AN931B10-14	•GROMMET -	101-	1
-17	AN3057-12	•ADAPTER -		1
-18	AF20-27	•GROMMET -		1
-19	AN3108-20-27P	•PLUG -		1
-20	1J1-2-2-6	•JUMPER - WIRE (NAA)		1
	755-3-2-6	•CLIP - INTEGRALLY BONDED SUPPORT (ADE)		1
	AN515-8R7	•SCREW - (CLIP ATTACHING)		1
	AN365-832	•NUT -		1
-21	AN3102A20-27S	RECEPTACLE - (CONTROL STICK) (SEE SECT. 10)		REF
		-000-		

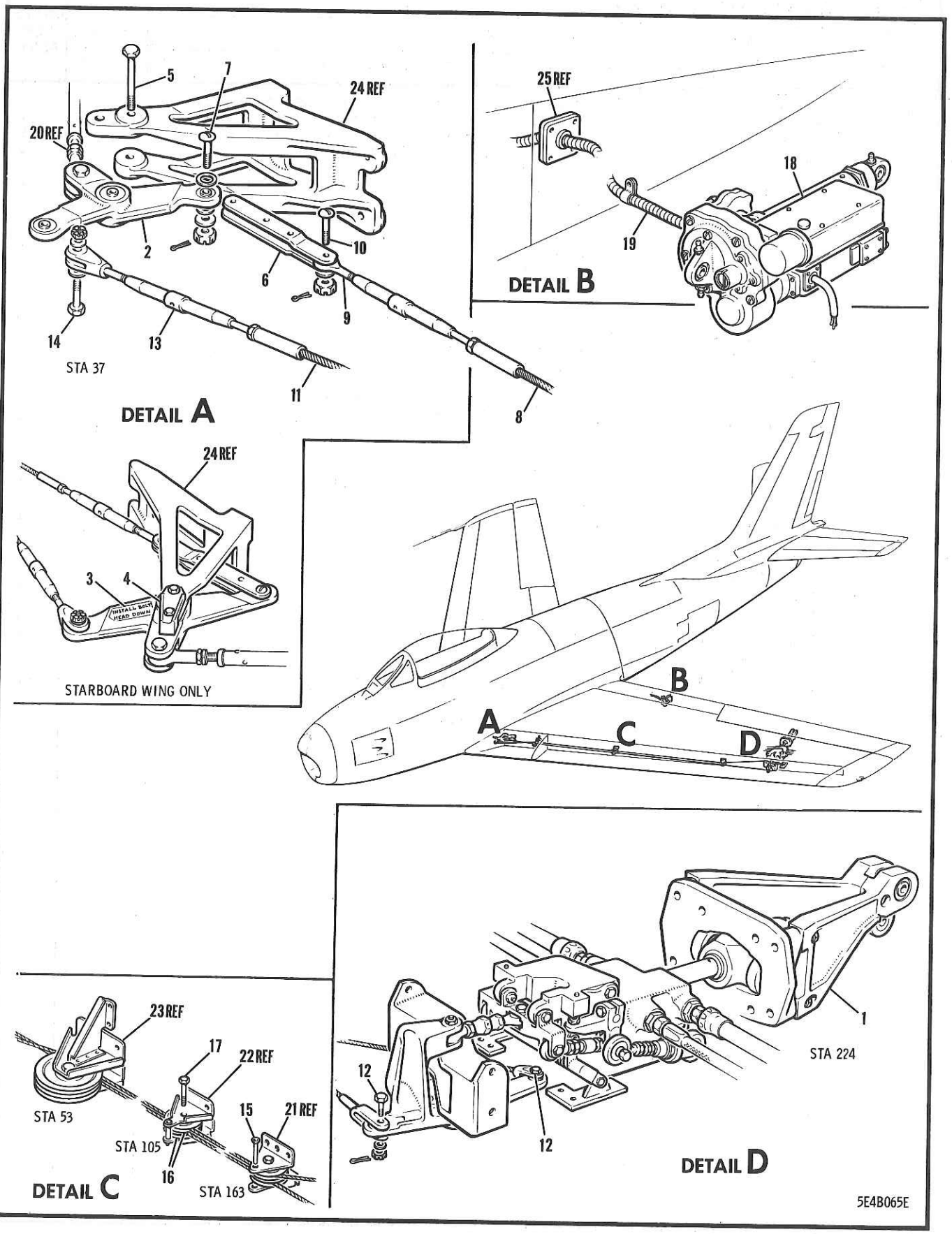

FIGURE 128 OUTER WING SURFACE CONTROL

Stanyar Bellan

Orenda 5

ROYAL CANADIAN AIR FORCE

EO 05-5E-4

17 Feb 58

ADVANCE REVISION

Serial # 5 dated 25 Nov 58

(Sheet 1 of 1)

The sheet of this Advance Revision is to be inserted in the EO as follows:

Sheet 1 facing page 604

Detail of Figure 128 Outer Wing Surface Control

The following sketch illustrates the correct installation of bolt AN174-14 attaching the RH aileron control rod to the centre wing bellcrank. There is no change in text breakdown.

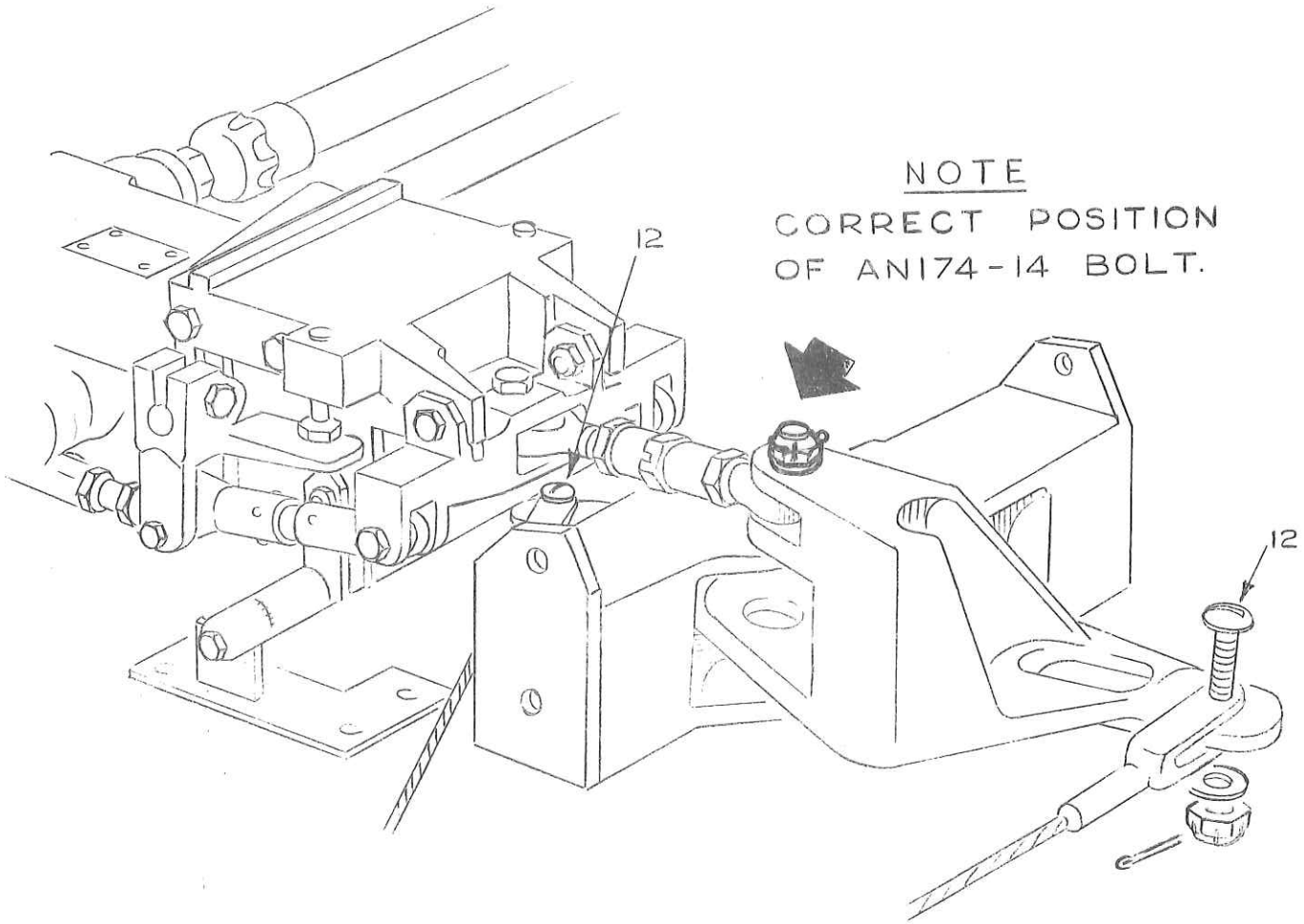

ISSUED ON AUTHORITY OF THE CHIEF OF THE AIR STAFF

ROYAL CANADIAN AIR FORCE EO 05-5E-4

17 Feb 58

ADVANCE REVISION

Serial # 5 dated 25 Nov 58

(Sheet 1 of 1)

The sheet of this Advance Revision is to be inserted in the EO as follows:

Sheet 1 facing page 604

Detail of Figure 128 Outer Wing Surface Control

The following sketch illustrates the correct installation of bolt AN174-14 attaching the RH aileron control rod to the centre wing bellcrank. There is no change in text breakdown.



FIGURE AND INDEX NUMBER	GROUP FLIGHT CONTROLS MAJOR ASSEMBLY OUTER WING SURFACE CONTROL PART NUMBER	1234567 NOMENCLATURE	CODE	UNITS PER ASSY
128 -	170-52014-1	SURFACE CONTROL INSTL - WING OUTER PANEL PORT (SEE SECTION 1)		NP
	170-52014-2	SURFACE CONTROL INSTL - WING OUTER PANEL STBD (SEE SECTION 1)		NP
- 1	165-52326-1	•MECHANISM INSTL - AILERON CTL/SURF OPR LH (SEE FIG. 129)		REF
	165-52326-2	•MECHANISM INSTL - AILERON CTL/SURF OPR RH (SEE FIG. 129)		REF
	165-52321-805	•BELL-CRANK ASSY - AILERON CONTROL WING OUTER PANEL INBOARD (PORT)	A28	1
- 2	165-52321-5	•BELL-CRANK ASSY - AILERON CONTROL WING OUTER PANEL INBOARD (PORT)	A29	1
	165-52321-806	•BELL-CRANK ASSY - AILERON CONTROL WING OUTER PANEL INBOARD (STARBOARD)	A28	1
	165-52321-6	•BELL-CRANK ASSY - AILERON CONTROL WING OUTER PANEL INBOARD (STARBOARD)	A29	1
- 3	165-523176	••DECALCOMANIA - AILERON CTL INBD BELCRK		2
	4S6-4-0.344	••SPACER - PLAIN DUAL BEARING (NAA)		1
	AN200K3	••BEARING -		2
	AN200K4	••BEARING -		2
- 4	170-68746	•PLATE - EMERGENCY JETT CABLE RUB. (STBD)	001-210	1
- 5	AN174-23A	•BOLT - (PORT SIDE) (PLATE ATTACHING)		1
	AN174-24A	•BOLT - (STBD SIDE) (PLATE ATTACHING)		1
	AN960D416	•WASHER -		1
	AN365-428	•NUT -		1
- 6	165-523128	•STRAP ASSY - AILERON CTL CABLE ADJ TERM.		1
- 7	AN23-12	•BOLT - (STRAP TO BELL-CRANK ATTACHING)		1
	AN960D10	•WASHER -		2
	AN960-10L	•WASHER -		1
	AN320-3	•NUT -		1
	AN380-2-2	•COTTER-PIN -		1
- 8	170-52312	•CABLE ASSY - AILERON CONTROL LOWER		1
- 9	AN165-16RL	•EYE -		1
-10	AN23-10	•BOLT - (CABLE TO STRAP ATTACHING)		1
	AN960D10	•WASHER -		1
	AN320-3	•NUT -		1
	AN380-2-3	•COTTER-PIN -		1
-11	170-52311	•CABLE ASSY - AILERON CONTROL UPPER		2
-12	AN23-13	•BOLT - (CABLE ATTACHING)		2
	AN960D10	•WASHER -		2
	AN320-3	•NUT -		2
	AN380-2-2	•COTTER-PIN -		2
-13	AN155-16L	•BARREL -		1
	AN162-3RL	•FORK -		1
-14	AN23-13	•BOLT - (CABLE TO BELL-CRANK ATTACHING)		1
	AN960D10	•WASHER -		1
	AN320-3	•NUT -		1
	AN380-2-2	•COTTER-PIN -		3
-15	NAS427K16	•PIN -		2
-16	NAS376-2	•PULLEY -		1
-17	AN4-13A	•BOLT - (PULLEY ATTACHING)		1
	AN960D416	•WASHER -		1
	AN365-428	•NUT -		1
-18	M-3320	•ACTUATOR - WING FLAP (AAI) (WITH END FITTING M3496M1) OR		
	D-1010	•ACTUATOR - (HCO) (FOR BREAKDOWN SEE EO 40-80PB-4) OR		
	A-1954-1	•ACTUATOR - (OJM)		

FIGURE AND INDEX NUMBER	GROUP FLIGHT CONTROLS MAJOR ASSEMBLY OUTER WING SURFACE CONTROL PART NUMBER	1234567 NOMENCLATURE	CODE	UNITS PER ASSY
128 -	AN176-12A	•BOLT - (ACTUATOR ATTACHING)		1
	AN176-15A	•BOLT - (ACTUATOR ATTACHING)		1
	AN960-616	•WASHER -		1
	AN960D616	•WASHER -		1
	AN365-624	•NUT -		1
-19	M-3522-M3	•SHAFTING - FLEXIBLE (AAI) (FLAP)		2
		OR		1
	M-3889-79.60	•SHAFTING - (AAI) (FLEXIBLE) (FLAP)		
		OR		
	7550Y-0A-79.10	•SHAFT - FLEXIBLE (WDM) (WITH CASING 79.60 OVER FERRULES) (FLAP) (ORDER 7550Y-0A-7960)		
		OR		
	SK4262-A-79.60	•SHAFT - (SFW) (FLEXIBLE)		
	AN742D7	•CLAMP -		
	AN742-6	•CLAMP -	001-370	7
	AN515-8R8	•SCREW - (CLAMP ATTACHING)	371-	7
	AN365-832	•NUT -		7
	NAS43DD3-32	•SPACER -		7
	AN507-832R16	•SCREW - (CLAMP ATTACHING)		1
	AN365-832	•NUT -		1
-20	170-52319	ROD ASSY - AILERON CONTROL WING CTR/SECT PORT (SEE FIG. 125)		1 REF
-21	165-52354-1	BRACKET ASSY - AILERON CONTROL WING STA 163 PULLEY PORT (SEE SECTION 1)		REF
-22	165-52333-1	BRACKET ASSY - AILERON CTL WING STA 105 PORT (SEE SECTION 1)		REF
-23	165-52328-1	BRACKET ASSY - AILERON CTL O/W STA 53 PORT (SEE SECTION 1)		REF
-24	165-52347-1	SUPPORT - AILERON CTL WOP INBD BELCRK PORT (SEE SECTION 1)		REF
-25	M-3357M1	COUPLING ASSY - FLEX. SHAFT WING FLAP ACTUATOR (AAI) (SEE FIG. 130)		REF
		(CONTINUED SEE SECTION 11)		

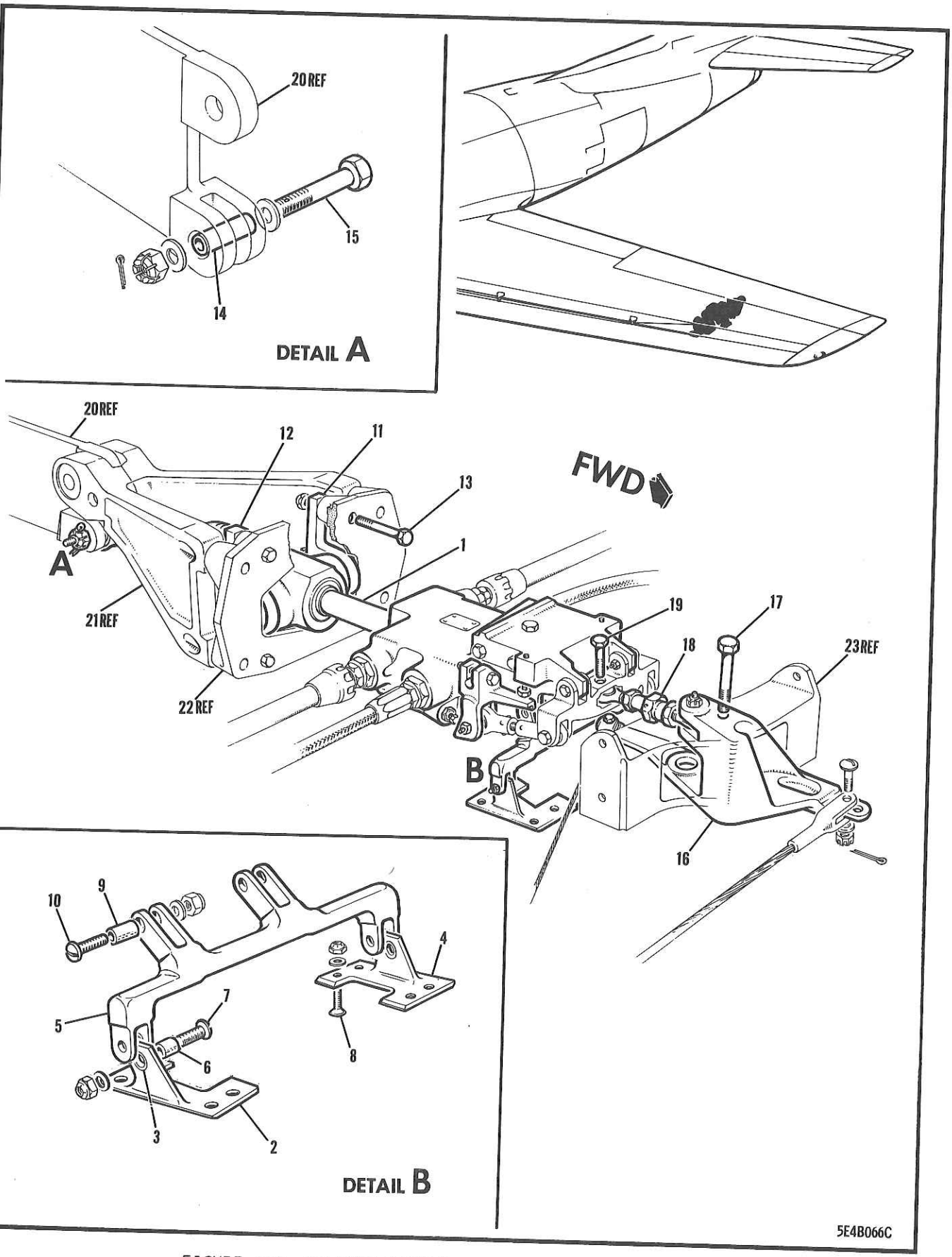

FIGURE 129 AILERON CONTROL OPERATING MECHANISM

FIGURE AND INDEX NUMBER	GROUP	FLIGHT CONTROLS	CODE	UNITS PER ASSY
	MAJOR ASSEMBLY	AILERON CONTROL OPERATING MECHANISM		
	PART NUMBER	1234567 NOMENCLATURE		
129 -	165-52326-1	MECHANISM INSTL - AILERON CTL/SURF OPR (PORT WING) (SEE FIG. 128)		NP
	165-52326-2	MECHANISM INSTL - AILERON CTL/SURF OPR (STARBOARD WING) (SEE FIG. 128)		NP
- 1	165-58705-8131	•ACTUATOR ASSY - HYDRAULIC AILERON (FOR BRKDN SEE EO 15-71BA-4)	001-100	1
	165-58705-8117	•ACTUATOR ASSY - HYDRAULIC AILERON (FOR BRKDN SEE EO 15-71BA-4)	101-	1
	165-52360-1	•IDLER ASSY - AILERON CONTROL VALVE SUPPORT (PORT WING)	001-200	1
	165-52360-11	•IDLER ASSY - AILERON CONTROL VALVE SUPPORT (PORT WING)	201-	1
	165-52360-2	•IDLER ASSY - AILERON CONTROL VALVE SUPPORT (STARBOARD WING)	001-200	1
	165-52360-12	•IDLER ASSY - AILERON CONTROL VALVE SUPPORT (STARBOARD WING)	201-	1
	165-52363-1	••SUPPORT ASSY - AILERON CONTROL VALVE IDLER INBOARD (PORT WING)		1
	165-52363-801	••SPARE PART FOR 165-52363-1		
	165-52363-2	••SUPPORT ASSY - AILERON CONTROL VALVE IDLER INBOARD (STARBOARD SIDE)		1
	165-52363-802	••SPARE PART FOR 165-52363-2		
- 2	165-52363-3	•••SUPPORT - AILERON CONTROL VALVE IDLER INBOARD (PORT WING)		1
	165-52363-4	•••SUPPORT - AILERON CONTROL VALVE IDLER INBOARD (STARBOARD WING)		1
- 3	165-52361	•••BUSHING - AILERON CONTROL VALVE SUPPORT		1
- 4	165-52364-1	••SUPPORT ASSY - AILERON CONTROL VALVE IDLER OUTBOARD (PORT WING)		1
	165-52364-801	••SPARE PART FOR 165-52364-1		
	165-52364-2	••SUPPORT ASSY - AILERON CONTROL VALVE IDLER OUTBOARD (STARBOARD WING)		1
	165-52364-802	••SPARE PART FOR 165-52364-2		
	165-52364-3	•••SUPPORT - AILERON CONTROL VALVE IDLER OUTBOARD (PORT WING)		1
	165-52364-4	•••SUPPORT - AILERON CONTROL VALVE IDLER OUTBOARD (STARBOARD WING)		1
	165-52361	•••BUSHING - AILERON CONTROL VALVE SUPPORT		1
- 5	165-52359-3	••IDLER - AILERON CONTROL VALVE SUPPORT (PORT WING)		1
	165-52359-4	••IDLER - AILERON CONTROL VALVE SUPPORT (STARBOARD WING)		1
- 6	170-523145	••SPACER - AILERON CONTROL VALVE SUPPORT	001-200	2
	4B21S4-010	••BUSHING - SPACER (NAA)	201-	2
- 7	AN24-13A	••BOLT - MPI (IDLER TO SUPPORT ATTACHING)		2
	AN960D416L	••WASHER -	001-200	2
	2W18-416L	••WASHER - PLAIN (NAA)	201-	2
	AN364-428	••NUT -		2
- 8	AN509-10R13	•SCREW - (IDLER SUPPORT ATTACHING)		8
	AN960D10	•WASHER -		8
	AN365-1032	•NUT -		8
- 9	4B21MS4-012	•BUSHING - SPACER (NAA)		2
-10	AN24-15A	•BOLT - MPI (CYLINDER TO IDLER ATTACHING)		2
	AN960D416L	•WASHER -		2
	AN364-428	•NUT -		2
-11	13-91017-1	•FITTING ASSY - AILERON ACTUATOR HYDRAULIC STRUT TRUNNION SUPPORT LH		1
-12	13-91017-2	•FITTING ASSY - AILERON ACTUATOR HYDRAULIC STRUT TRUNNION SUPPORT RH		1
	13-91017-3	••FITTING - AILERON ACTUATOR HYDRAULIC STRUT TRUNNION SUPPORT		1
	165-16046-3	••BUSHING - AILERON ACTUATING HYDRAULIC STRUT TRUNNION SUPPORT		1
	AN944-201	••FITTING -		1

FIGURE AND INDEX NUMBER	GROUP FLIGHT CONTROLS MAJOR ASSEMBLY AILERON CONTROL OPERATING MECHANISM PART NUMBER	1234567 NOMENCLATURE	CODE	UNITS PER ASSY
129 -13	AN5-22A	•BOLT - MPI (STRUT TRUNNION SUPPORT TO AILERON CENTRE HINGE SUPPORT FTG)		2
	AN365-524	•NUT -		4
-14	4B21B8-024	•BUSHING - SPACER (NAA)	001-100	1
	4B21S8-024	•BUSHING - SPACER (NAA)	101-	1
-15	NAS464P8-24	•BOLT - (AILERON ACTE ROD-END TO HINGE FTG) (AS PER EO 05-5E-6A/107)		1
	AN960D816	•WASHER -		1
	2W18-816	•WASHER - PLAIN (NAA)	001-100	2
	AN310-8	•NUT -	101-	1
	AN320-8	•NUT -	001-100	1
	AN380-3-3	•COTTER-PIN -	101-	1
-16	165-52324-805	•BELL-CRANK ASSY - AILERON CONTROL O/W (PORT WING) (AS PER EO 05-5E-6A/68)		1
	165-52324-806	•BELL-CRANK ASSY - AILERON CONTROL O/W (STBD WING) (AS PER EO 05-5E-6A/68)		1
	165-52324-903	••BELL-CRANK - AILERON CONTROL O/W (PORT)		1
	165-52324-904	••BELL-CRANK - AILERON CONTROL O/W (STBD)		1
	AN200K6	••BEARING -		2
	4S7-10-729	••SPACER - FLANGED DUAL BEARING (NAA)		1
	AN200K3	••BEARING -		2
-17	NAS464-6A41	•BOLT - (BELL-CRANK TO SUPPORT ATTACHING)		1
	AN960D616	•WASHER -		1
	AN364-624	•NUT -		1
-18	165-52398	•TURNBUCKLE ASSY - AILERON VALVE CONTROL		1
	165-523109	••BARREL - AILERON VALVE CONTROL TRNBKL MPI		1
	165-52397-1	••ROD-END ASSY - AILERON VALVE CONTROL (PORT WING)		1
	165-52397-2	••ROD-END ASSY - AILERON VALVE CONTROL (STARBOARD WING)		1
	AN316-6L	••NUT -		1
	AN316-6R	••NUT -		1
-19	AN174-14A	•BOLT - MPI (TRNBKL TO VALVE BELCRK ATT)		1
	AN960D416	•WASHER -		1
	AN365-428	•NUT -		2
	AN174-14	•BOLT - MPI (TRNBKL TO AIL.CTL BELCRK ATT)		1
	AN960D416	•WASHER -		1
	AN310-4	•NUT -		2
	AN380-2-2	•COTTER-PIN -		1
-20	165-16169-5	FITTING - AILERON SPAR CENTRE HINGE (SEE SECTION 1)		REF
-21	165-16068-7	FITTING ASSY - AILERON CENTRE HINGE (PORT WING) (SEE SECTION 1)		REF
-22	165-16067-5	FITTING ASSY - AILERON CENTRE HINGE SUPPORT (PORT WING) (SEE SECTION 1)		REF
-23	165-16065-3	SUPPORT - WING OUTER PANEL AILERON BELCRK STA 215-224 (PORT) (SEE SECTION 1)		REF

-000-

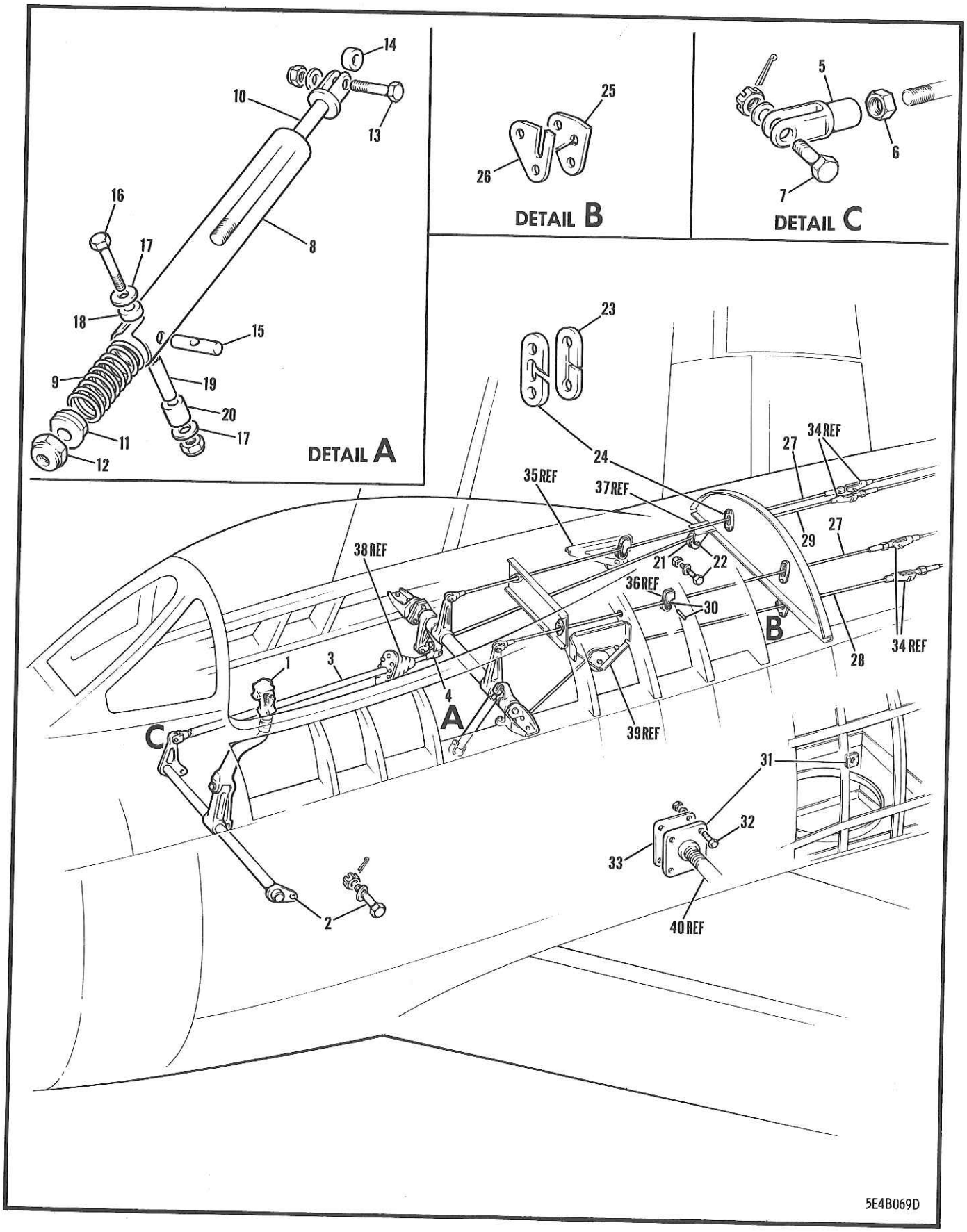

FIGURE 130 FORWARD FUSELAGE SURFACE CONTROL

FIGURE AND INDEX NUMBER	GROUP FLIGHT CONTROLS MAJOR ASSEMBLY FUSELAGE FORWARD SURFACE CONTROL PART NUMBER	1234567 NOMENCLATURE	CODE	UNITS PER ASSY
130 -	176-52031	SURFACE CONTROL INSTL - FUSELAGE FORWARD (SEE SECTION 3)		NP
- 1	170-52101	•CONTROL STICK ASSY - PILOT COMPLETE (SEE FIG. 127)		REF
	151-52419-9	•PEDAL ASSY - PILOT RUDDER COMPLETE LH (SEE FIG. 136)		REF
	151-52419-12	•PEDAL ASSY - PILOT RUDDER COMPLETE RH (SEE FIG. 136)		REF
- 2	AN4-16	•BOLT - MPI (CONTROL STICK PIVOT)		2
	AN960D416	•WASHER -		2
	AN310-4	•NUT -		2
	AN380-2-2	•COTTER-PIN -		2
	170-52211-7	•ROD ASSY - HOR/STAB CONTROL FWD PUSH-PULL		1
	170-52211-11	••ROD ASSY - HORIZONTAL STABILIZER CONTROL		1
- 3	170-52211-9	•••TUBE - CONTROL ROD		1
	140-52202	•••ROD-END - CONTROL MPI		1
- 4	140-52204	•••FORK - CONTROL ROD		1
- 5	170-522271	••FORK - CONTROL ROD ADJUSTING MPI		1
- 6	AN316-6R	••NUT -		1
- 7	AN174-12	•BOLT - MPI (ROD TO HORN ATTACHING)		2
	AN960D416	•WASHER -		2
	AN310-4	•NUT -		2
	AN380-2-2	•COTTER-PIN -		2
	170-522281-800	•BUNGEE ASSY - HOR/STAB CONTROL BOB-WEIGHT		1
- 8	170-522283-800	••TUBE - BUNGEE		1
- 9	176-52245	••SPRING - COMPRESSION		1
-10	170-522285	••CLEVIS - BUNGEE MPI		1
-11	170-522288	••PISTON - BUNGEE		1
-12	AN365-428	••NUT -		1
-13	AN3-6A	•BOLT - MPI (BUNGEE TO BELL-CRANK ATT)		1
-14	4B21-B3-005	•BUSHING - SPACER (NAA)		1
	AN960D10	•WASHER -		1
	AN365-1032	•NUT -		1
-15	170-522284	•TRUNNION - HOR/STAB CTL BOB-WEIGHT BUNGEE		1
-16	AN3-17A	•BOLT - MPI (TRUNNION TO TUBE ATTACHING)		2
-17	AN960D10	•WASHER -		1
-18	4B21-S5-009	•BUSHING - SPACER (NAA)		1
-19	4B21-S3-112	•BUSHING - SPACER (NAA)		1
-20	4B21-S5-017	•BUSHING - SPACER (NAA)		1
	AN365-1032	•NUT -		1
-21	AN210-2B	•PULLEY -		1
-22	AN3-12A	•BOLT - MPI (PULLEY ATTACHING)		2
	AN960D10	•WASHER -		1
	AN365-1032	•NUT -		1
-23	170-52255-801	•SEAL - HORIZONTAL STABILIZER CONTROL CABLE (PORT SIDE) (AS PER EO 05-5E-6A/86)		1
	170-52255	•SEAL - HOR/STAB CONTROL CABLE (STBD SIDE)		1
-24	170-52254-801	•FAIRLEAD - HORIZONTAL STAB. CONTROL CABLE (PORT SIDE) (AS PER EO 05-5E-6A/86)		1
	170-52254	•FAIRLEAD - CONTROL CABLE (STARBOARD SIDE)		1
	AN515-8R8	•SCREW - (FAIRLEAD ATTACHING)		4
	AN960D8	•WASHER -		4
	AN365-832	•NUT -		4
-25	151-52012	•SEAL - ELEVATOR CABLE OUTBOARD		2
-26	151-52011	•FAIRLEAD - ELEVATOR CABLE OUTBOARD		2
	AN515-8R8	•SCREW - (FAIRLEAD ATTACHING)		4
	AN960D8	•WASHER -		4
	AN365-832	•NUT -		4
-27	170-52201	•CABLE ASSY - HORIZONTAL STABILIZER FORWARD UPPER CONTROL		2

FIGURE AND INDEX NUMBER	GROUP	FLIGHT CONTROLS	CODE	UNITS PER ASSY
	MAJOR ASSEMBLY	FUSELAGE FORWARD SURFACE CONTROL		
	PART NUMBER	1234567 NOMENCLATURE		
130 -28	170-52233	•CABLE ASSY - HORIZONTAL STABILIZER FORWARD LOWER CONTROL (PORT SIDE)		1
-29	170-52203	•CABLE ASSY - HORIZONTAL STABILIZER FORWARD LOWER CONTROL (STARBOARD SIDE)		1
	AN3-7	•BOLT - MPI (CABLE ATTACHING)		4
	AN960D10	•WASHER -		4
	AN310-3	•NUT -		4
	AN380-2-3	•COTTER-PIN -		4
-30	NAS427K9	•PIN - (PORT SIDE)		2
-31	M-3357M1	•COUPLING ASSY - FLEX. SHAFT WING FLAP ACTUATOR (AAI)		1
		OR		
	7579X-0C	•FITTING - BULKHEAD (WDM)		
-32	AN3-7A	•BOLT - MPI (COUPLING ATTACHING)		4
		OR		
	AN3-10A	•BOLT - MPI (COUPLING ATTACHING)		
-33	176-52031-951	•SHIM - SURFACE CONTROL COUPLING		AR
	AN960D10	•WASHER -		4
	AN365-1032	•NUT -		4
	AN515-8R14	•SCREW - (FLEXIBLE SHAFT TO STIFFENER ATT)	070-	2
	4B20-53-020	•BUSHING - SPACER (NAA)	070-	2
	AN365-832	•NUT -	070-	2
	674-3-9-FR	•STRAP ASSY - HARNESS BOLT TYPE (ADE)		1
	AN520-10-10	•SCREW - (STRAP ATTACHING)		1
	AN365-1032	•NUT -		1
-34	D6-1001-3N	LOCK ASSY - (PSC) (RUDDER CONTROL CABLE QUICK RELEASE) (SEE FIG. 125)		REF
-35	151-52405-5	BRACKET ASSY - PILOT RUDDER CTL FUS STA 165 (SEE SECTION 3)		REF
-36	170-522109	BRACKET ASSY - HOR/STAB CONTROL FUS STA 156 (SEE SECTION 3)		REF
-37	170-52204	BRACKET - HOR/STAB CTL FUS STA 176 PULLEY (SEE SECTION 3)		REF
-38	140-52239	BOOT - ELEVATOR PUSH-PULL TUBE SEAL (SEE SECTION 3)		REF
-39	170-52020	BRACKET ASSY - HOR/STAB CTL FUS STA 134-145 PUL (SEE SECTION 3)		REF
-40	M-3522-M3	SHAFTING - FLEXIBLE (AAI) (FLAP) (SEE FIG. 128)		REF
		(CONTINUED SEE FIG. 126)		

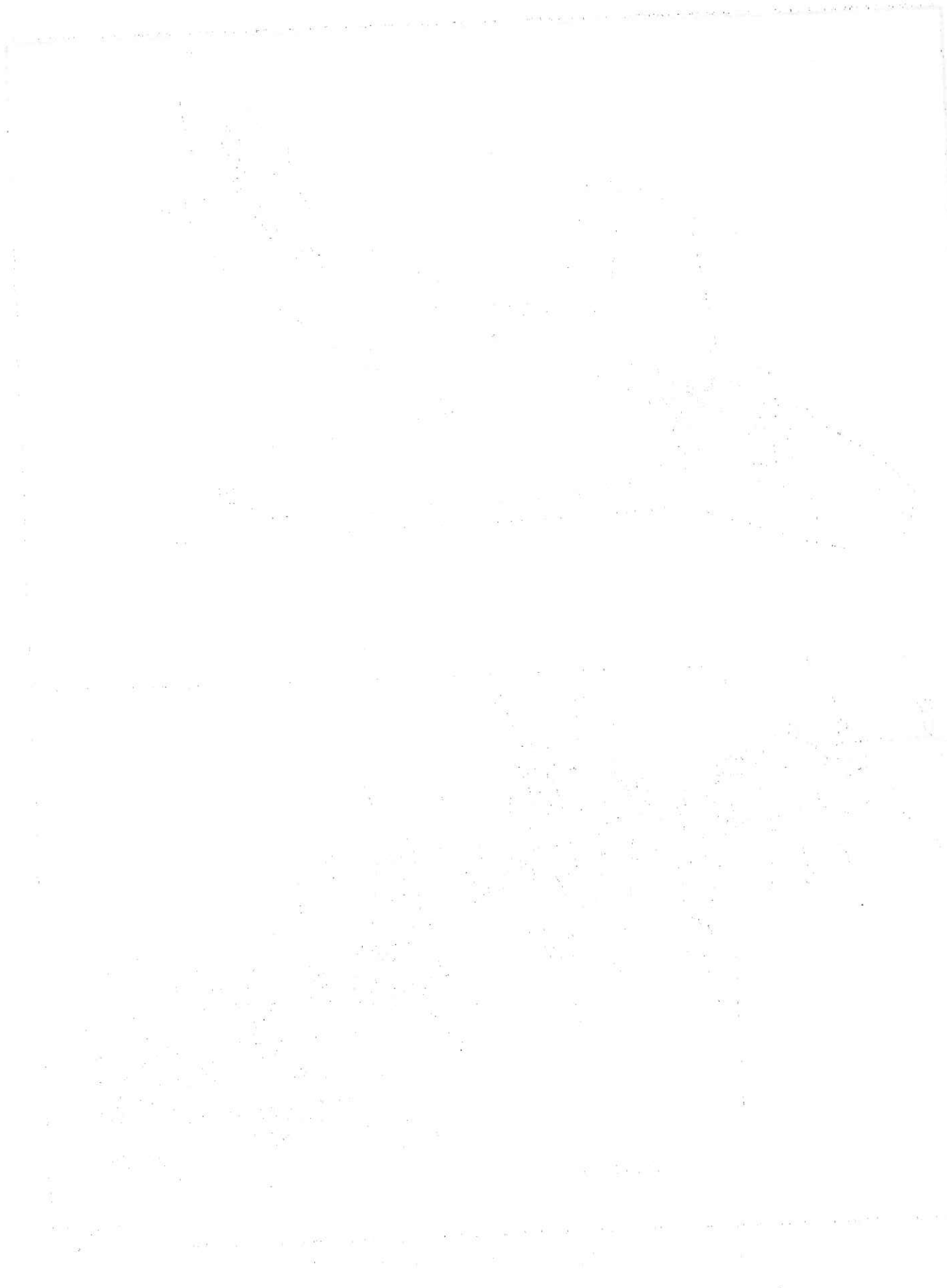

FIGURE AND INDEX NUMBER	GROUP FLIGHT CONTROLS MAJOR ASSEMBLY HORIZONTAL STABILIZER CONTROL MECHANISM PART NUMBER	1234567 NOMENCLATURE	CODE	UNITS PER ASSY
131 -34	AN4-10A	•BOLT - MPI (TORQUE TUBE FITTING & HNG ATT)		6
-35	AN4-7A	•BOLT - MPI (TORQUE TUBE FITTING & HNG ATT)		2
	AN960D416	•WASHER -		8
	AN365-428	•NUT -		8
		-000-		

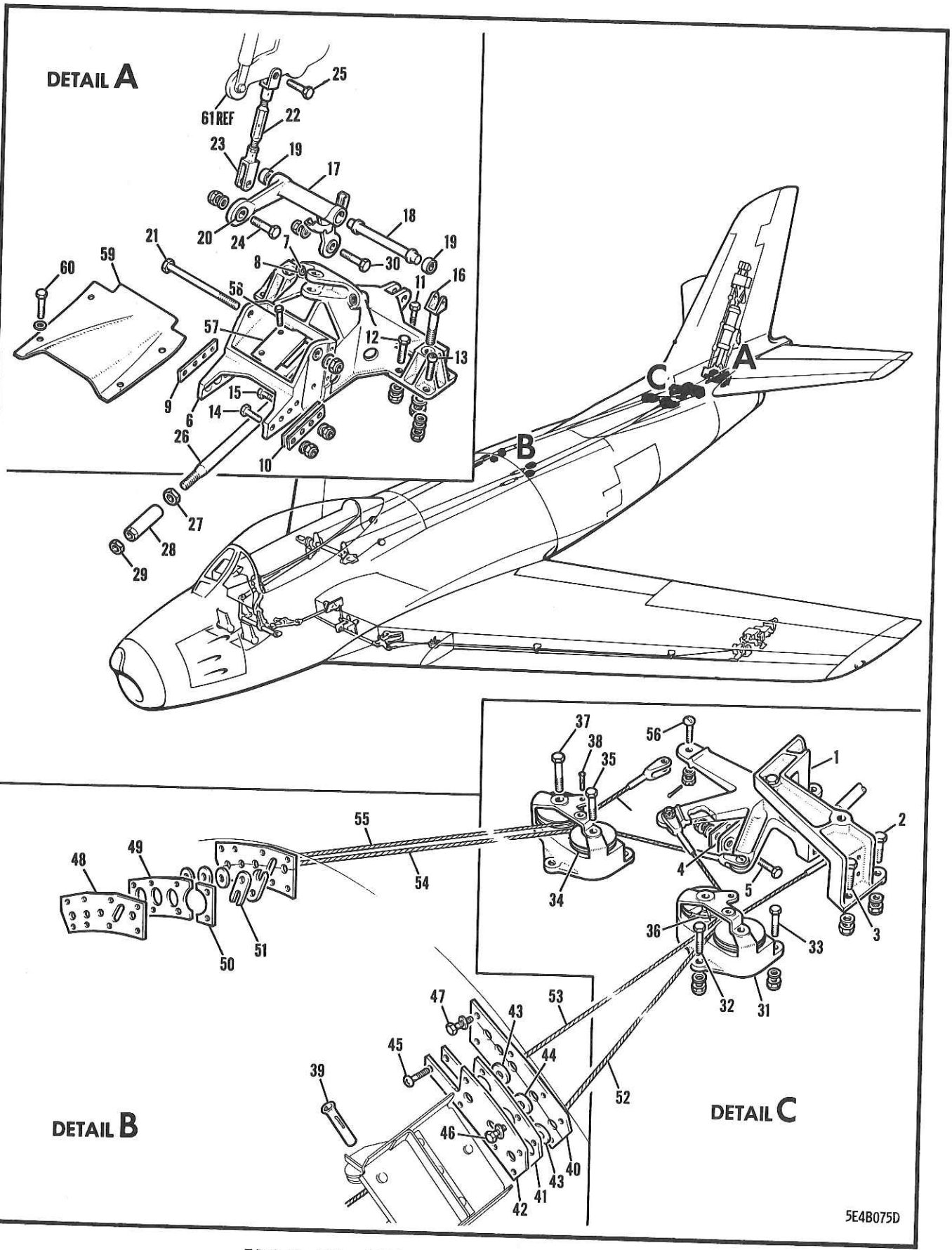

FIGURE 132 REAR FUSELAGE SURFACE CONTROL

FIGURE AND INDEX NUMBER	GROUP: FLIGHT CONTROLS MAJOR ASSEMBLY: REAR FUSELAGE SURFACE CONTROL PART NUMBER	1234567 NOMENCLATURE	CODE	UNITS PER ASSY
132 -	176-52032	SURFACE CONTROLS INSTL - REAR FUSELAGE (SEE FIG. 1)		NP
- 1	176-52208-5	•BELL-CRANK ASSY - HORIZONTAL STABILIZER REAR CONTROL (SEE FIG. 133)		REF
- 2	AN4-6A	•BOLT - MPI (BELL-CRANK ATTACHING)		3
	AN960D416	•WASHER -		3
	AN363-428	•NUT -		3
- 3	AN3-6A	•BOLT - MPI (BELL-CRANK ATTACHING)		2
	AN960D10	•WASHER -		2
	AN363-1032	•NUT -		2
- 4	170-522108	•SHIM - HORIZONTAL STAB. CONTROL SUPPORT		AR
	170-522108-851	•SHIM - HORIZONTAL STAB. CONTROL SUPPORT		AR
	170-522108-852	•SHIM - HORIZONTAL STAB. CONTROL SUPPORT		AR
- 5	AN3-5A	•BOLT - MPI (BELL-CRANK ATTACHING)		4
	AN960D10L	•WASHER -		4
	AN365-1032	•NUT -		4
- 6	170-52010	•SUPPORT ASSY - SURFACE CONTROL EMPENNAGE		1
- 7	RD206SH-6.5L	••INSERT - LOCKED-IN (ROS)		2
- 8	RL28SB-8	••LOCK-RING - STANDARD (ROS)		2
- 9	170-522107-3	•SHIM - HORIZONTAL STABILIZER CTL REAR SUP.		AR
-10	170-522107-5	•SHIM - HORIZONTAL STABILIZER CTL REAR SUP.		AR
	170-522107-7	•SHIM - HORIZONTAL STABILIZER CTL REAR SUP.		AR
-11	AN4-6A	•BOLT - MPI (SUPPORT ATTACHING)		10
-12	AN4-10A	•BOLT - MPI (SUPPORT ATTACHING)		2
-13	NAS144-20	•BOLT - MPI (SUPPORT ATTACHING)		10
	2W10-4	•WASHER - COUNTERSUNK (NAA)		10
	AN960-416	•WASHER -		22
	AN363-428	•NUT -		22
-14	AN4-6A	•BOLT - MPI (SUPPORT ATTACHING)		4
-15	AN4-7A	•BOLT - MPI (SUPPORT ATTACHING)		4
	AN960D416	•WASHER -		8
	AN365-428	•NUT -		8
-16	13-21015-7	•BOLT - HORIZONTAL STAB. HINGE FUS STA 398		2
	AN960C1016	•WASHER -		2
	42FW-1018	•LOCK-NUT - EXTERNAL WRENCHING (SPS)		2
-17	176-52243-9	•BELL-CRANK ASSY - HORIZONTAL STABILIZER CONTROL REAR		1
-18	4S7-7-4-454	••SPACER - DUAL BEARING FLANGED (NAA)		1
-19	AN201KP5A	••BALL-BEARING - INTERMEDIATE DUTY		2
-20	AN200KS4	••BEARING -		2
-21	AN175-60A	•BOLT - MPI (BELL-CRANK TO SUPPORT ATT)		1
	AN960D516	•WASHER -		1
	AN365-524	•NUT -		1
	170-522123	•ROD ASSY - HORIZONTAL STAB. CTL VALVE ACTE		1
-22	170-522125	••ROD - HORIZONTAL STAB. CONTROL VALVE ACTE		1
	AN316-5L	••NUT -		1
-23	170-522124	••FORK - HOR/STAB VALVE ACTE ROD LOWER		1
	AN316-5R	••NUT -		1
	170-522117	••FORK - HORIZONTAL STAB. CTL VALVE ROD UP.		1
-24	AN174-12A	•BOLT - MPI (ROD TO BELL-CRANK ATTACHING)		1
	AN960D416	•WASHER -		1
	AN365-428	•NUT -		1
-25	NAS464-4-12	•SHEAR-BOLT - CLOSE TOLERANCE MPI (ROD TO VALVE LEVER ATTACHING)		1
	AN960D416	•WASHER -		1
	AN320-4	•NUT -		1
	AN380-2-2	•COTTER-PIN -		1
-26	170-52209-5	•ROD ASSY - HORIZONTAL STAB. CONTROL LOWER		1
	176-52203	••CLEVIS - HORIZONTAL STAB. CONTROL ROD		1
-27	170-52261	•CHECK-NUT - HORIZONTAL STABILIZER CONTROL LOWER ROD REAR		1

FIGURE AND INDEX NUMBER	GROUP	FLIGHT CONTROLS	CODE	UNITS PER ASSY
	MAJOR ASSEMBLY	REAR FUSELAGE SURFACE CONTROL		
	PART NUMBER	1234567 NOMENCLATURE		
132 -28	170-52260	•BARREL - HORIZONTAL STABILIZER CONTROL LOWER ROD ADJUSTMENT		1
-29	170-52262	•CHECK-NUT - HORIZONTAL STABILIZER CONTROL LOWER ROD FORWARD		1
-30	AN174-12A	•BOLT - MPI (REAR BELL-CRANK TO ROD ATT)		1
	AN960D416	•WASHER -		1
	AN365-428	•NUT -		1
-31	170-52205	•BRACKET - HORIZONTAL STAB. CTL FUS STA 364		2
-32	AN3-5A	•BOLT - MPI (BRACKET ATTACHING)		2
-33	AN3-6A	•BOLT - MPI (BRACKET ATTACHING)		4
	AN960D10	•WASHER -		6
	AN363-1032	•NUT -		6
-34	AN210-2B	•PULLEY -		4
-35	AN3-12A	•BOLT - MPI (PULLEY ATTACHING)		2
-36	NAS43DD3-49	•SPACER -		2
	AN960-10	•WASHER - (BETWEEN PULLEY & BRACKET)		2
-37	AN3-20A	•BOLT - MPI (PULLEY ATTACHING)		2
	2W1C12-24-64	•WASHER - PLAIN (NAA)(ONE ON PORT SIDE)		3
	AN960D10	•WASHER -		4
	AN365-1032	•NUT -		4
-38	NAS427T6	•PIN -		6
-39	NAS427K12	•PIN -		6
	13A-93011	•FIRE-SEAL ASSY - CONTROL CABLE SHROUD FUSELAGE STA 244 (PORT SIDE)	001-020	1
	13A-93011-3	•FIRE-SEAL ASSY - CONTROL CABLE SHROUD FUSELAGE STA 244 (PORT SIDE)	021-100	1
	13A-93011-5	•FIRE-SEAL ASSY - CONTROL CABLE SHROUD FUSELAGE STA 244 (PORT SIDE)	101-	1
-40	13A-93006-3	••SEAL - CONTROL CABLE SHROUD (PORT SIDE)		1
	13A-93006-5	••SEAL - CONTROL CABLE SHROUD (PORT SIDE)		1
-41	13A-93005	••SPACER - CONTROL CABLE SHROUD SEAL (PORT SIDE)		1
-42	13A-93004	••RETAINER - CONTROL CABLE SHROUD SEAL (PORT SIDE SEAL)		1
-43	170-52035-3	••FAIRLEAD - CONTROL CABLE SHROUD SEAL		4
-44	170-52035-5	••FAIRLEAD - CONTROL CABLE SHROUD SEAL		2
-45	AN507-1032R14	•SCREW - (SEAL ATTACHING)		4
-46	AN3-5A	•BOLT - (SEAL ATTACHING)		3
-47	AN3-3A	•BOLT - (SEAL ATTACHING)		1
	AN960D10L	•WASHER -		4
	13A-93012	•FIRE-SEAL ASSY - CONTROL CABLE SHROUD FUSELAGE STA 244 (STARBOARD SIDE)	001-020	1
	13A-93012-3	•FIRE-SEAL ASSY - CONTROL CABLE SHROUD FUSELAGE STA 244 (STARBOARD SIDE)	021-100	1
	13A-93012-5	•FIRE-SEAL ASSY - CONTROL CABLE SHROUD FUSELAGE STA 244 (STARBOARD SIDE)	101-	1
	13A-93007	••SEAL - CONTROL CABLE SHROUD		2
-48	13A-93007-3	•••SEAL - CONTROL CABLE SHROUD (STBD SIDE)		2
	13A-93007-5	•••SEAL - CONTROL CABLE SHROUD		2
-49	13A-93002	••SPACER - CONTROL CABLE SHROUD SEAL (STARBOARD SIDE SEAL)		1
-50	13A-93003	••SPACER - CONTROL CABLE SHROUD SEAL INBOARD (STARBOARD SIDE SEAL)		1
	170-52035-3	••FAIRLEAD - CONTROL CABLE SHROUD SEAL		4
	170-52035-5	••FAIRLEAD - CONTROL CABLE SHROUD SEAL		2
-51	170-58729	••FAIRLEAD - CONTROL TUBE		2
	AN507-1032R14	•SCREW - (SEAL ATTACHING)		4
	AN3-5A	•BOLT - (SEAL ATTACHING)		4
	AN960D10L	•WASHER -		4
-52	170-52202	•CABLE ASSY - HORIZONTAL STABILIZER CONTROL REAR LOWER (PORT SIDE)		1

FIGURE AND INDEX NUMBER	GROUP FLIGHT CONTROLS MAJOR ASSEMBLY REAR FUSELAGE SURFACE CONTROL PART NUMBER	1234567 NOMENCLATURE	CODE	UNITS PER ASSY
132 -	AN669L3RH	••TERMINAL -		1
	AN658-3	••TERMINAL - (FOR SWAGING)		1
-53	170-52215	•CABLE ASSY - HORIZONTAL STABILIZER CONTROL REAR UPPER (PORT SIDE)		1
	AN669L3LH	••TERMINAL -		1
	AN658-3	••TERMINAL -		1
-54	170-52232	•CABLE ASSY - HORIZONTAL STABILIZER CONTROL REAR LOWER (STARBOARD SIDE)		1
	AN669L3RH	••TERMINAL -		1
	AN658-3	••TERMINAL -		1
-55	170-52213	•CABLE ASSY - HORIZONTAL STABILIZER CONTROL REAR UPPER (STARBOARD SIDE)		1
	AN669L3LH	••TERMINAL -		1
	AN658-3	••TERMINAL -		4
-56	AN23-13	•BOLT - MPI (CABLE TO BELL-CRANK ATT)		4
	AN960D10	•WASHER -		4
	AN320-3	•NUT -		4
	AN380-2-2	•COTTER-PIN -		1
-57	170-52288	•COVER - HORIZONTAL STAB. CONTROL SUPPORT		2
-58	AN3-5A	•BOLT - (COVER ATTACHING)		1
-59	170-52293	•SHIELD - HORIZONTAL STAB. CTL REAR MECH		4
-60	AN3-4A	•BOLT - (SHIELD ATTACHING)		4
	AN960D10	•WASHER -		8
	AN960D10L	•WASHER -		4
	AN365-1032	•NUT -		REF
-61	172-58733	LEVER ASSY - HYDRAULIC HORIZONTAL SURFACE CONTROL VALVE RH (SEE SECTION 11)		
		(CONTINUED SEE FIG. 134)		

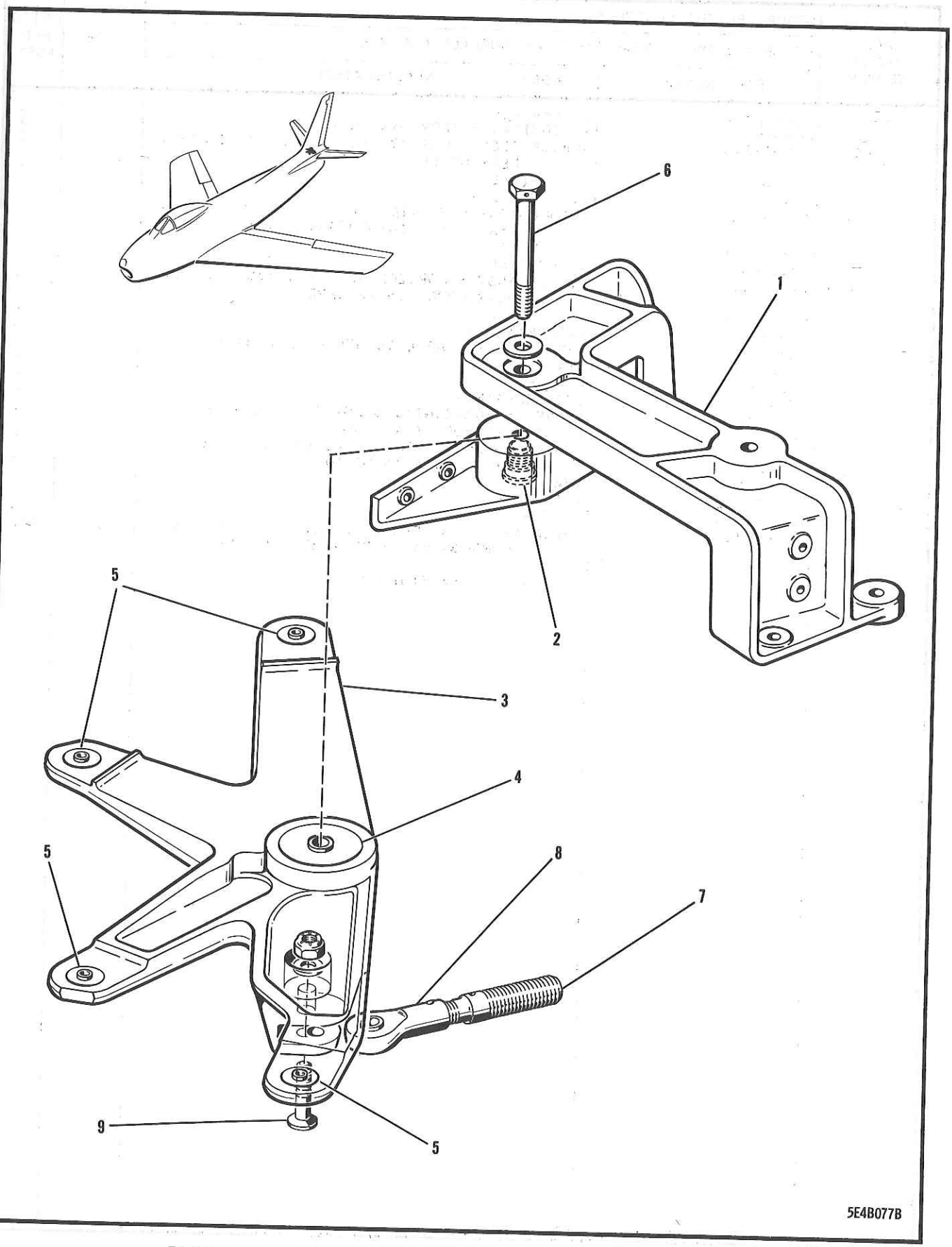

FIGURE 133 HORIZONTAL STABILIZER REAR CONTROL BELL-CRANK

FIGURE AND INDEX NUMBER	GROUP FLIGHT CONTROLS MAJOR ASSEMBLY HORIZONTAL STABILIZER REAR CONTROL BELL-CRANK PART NUMBER	1234567 NOMENCLATURE	CODE	UNITS PER ASSY
133 -	176-52208-5	BELL-CRANK ASSY - HORIZONTAL STABILIZER REAR CONTROL (SEE FIG. 132)		1
- 1	176-52235	•SUPPORT ASSY - HOR/STAB REAR DECK CONTROL		1
- 2	R207SB-9	••INSERT - LOCKED-IN (ROS)		1
	RL31SB-9	••LOCK-RING - STANDARD (ROS)		1
	176-52206-5	•BELL-CRANK ASSY - HOR/STAB BOOST CONTROL		1
- 3	176-52206-3	••BELL-CRANK - HOR/STAB BOOST CONTROL (MAKE FROM 176-52206)		1
- 4	AN200KP5	••BEARING -		2
- 5	AN201KP3A	••BEARING -		4
	4S6-5-0.384	••SPACER - DUAL BEARING PLAIN (NAA)		1
- 6	AN175H30A	•BOLT - (BELL-CRANK TO SUPPORT ATTACHING)		1
	AN960D516	•WASHER -		1
	170-522254	•ROD-END ASSY - HOR/STAB CONTROL FORWARD		1
- 7	170-522254-3	••ROD-END - HOR/STAB CONTROL FORWARD MPI		1
- 8	RE4F5	••ROD-END - DOUBLE-ROW SELF-ALIGNING BEARING (FBC)		1
- 9	NAS334A14	•BOLT - (ROD-END TO BELL-CRANK ATTACHING)		1
	AN960D416	•WASHER -		1
	AN365-428	•NUT -		1

-000-

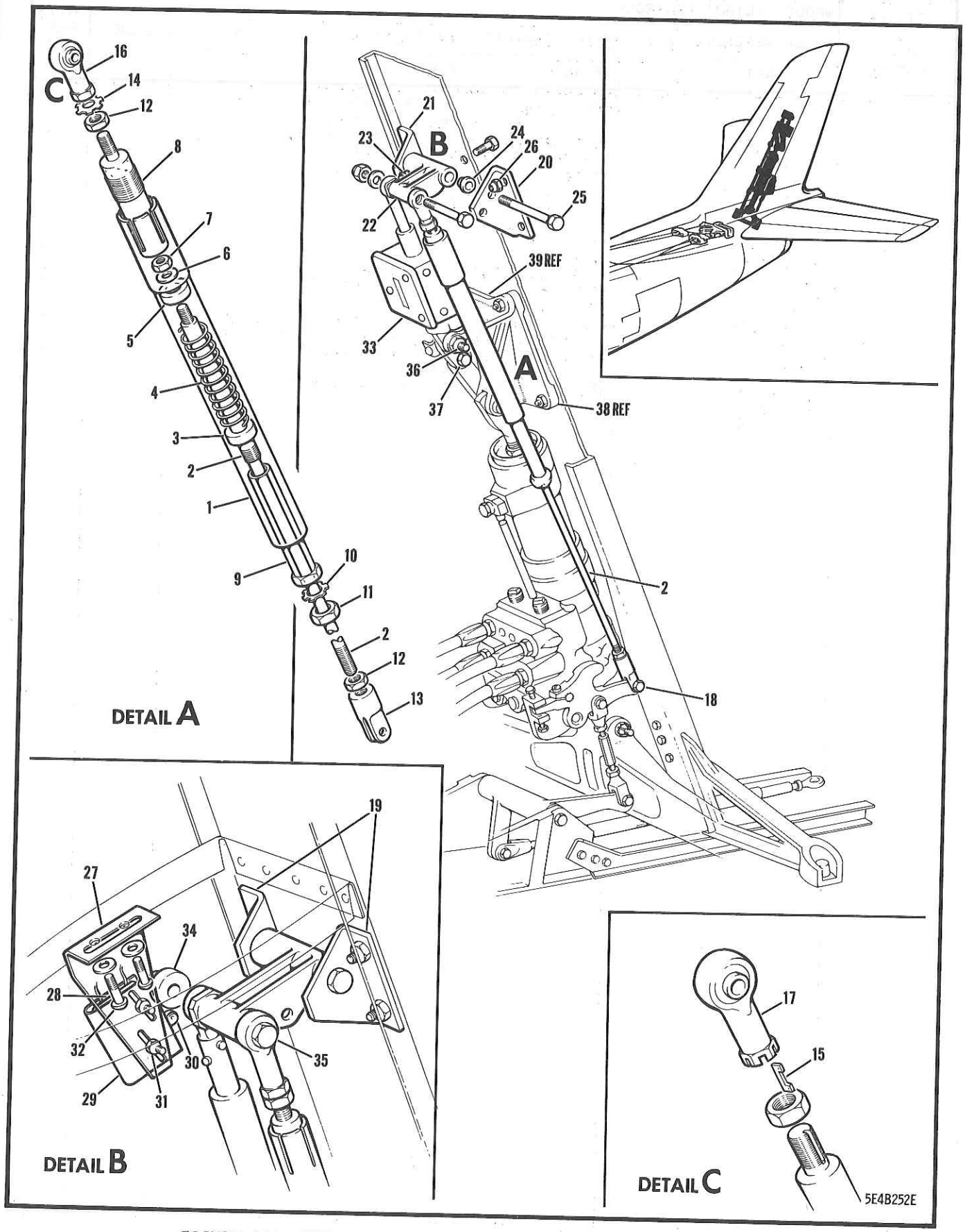

FIGURE 134 HORIZONTAL STABILIZER CONTROL ARTIFICIAL FEEL

FIGURE AND INDEX NUMBER	GROUP FLIGHT CONTROLS MAJOR ASSEMBLY HORIZONTAL STABILIZER CONTROL ARTIFICIAL FEEL PART NUMBER	1234567 NOMENCLATURE	CODE	UNITS PER ASSY
134 -	176-52032	SURFACE CONTROLS INSTL - REAR FUSELAGE (SEE FIG. 132)		REF
	176-52220-3	•BUNGEE ASSY - HOR/STAB CONTROL ARTIFICIAL FEEL AT SURFACE	001-726	1
	176-52220-803	•BUNGEE ASSY - HOR/STAB CONTROL ARTIFICIAL FEEL AT SURFACE	727-	1
- 1	170-522276	••CASE - HORIZONTAL STAB. CTL FEEL BUNGEE		1
- 2	191-52253	••ROD - HORIZONTAL STABILIZER CONTROL ARTIFICIAL FEEL AT SURFACE		1
- 3	170-522275-5	••PISTON - HORIZONTAL STAB. CTL FEEL BUNGEE		1
- 4	170-522272	••SPRING - CLOSE TOLERANCE COMPRESSION		1
- 5	170-522275-3	••PISTON - HORIZONTAL STAB. CTL FEEL BUNGEE		1
- 6	AN960D416	••WASHER -		1
- 7	AN310-4	••NUT -		1
	AN380-2-1	••COTTER-PIN -		1
- 8	176-52259	••PLUG - HOR/STAB CONTROL FEEL BUNGEE END ADJUSTMENT	001-726	1
	176-52259-800	••PLUG - HOR/STAB CONTROL FEEL BUNGEE END ADJUSTMENT	727-	1
- 9	191-52256	••SLEEVE - HORIZONTAL STABILIZER CONTROL ARTIFICIAL FEEL AT SURFACE		1
-10	NAS460-616	••WASHER -		1
-11	AN316-6	••CHECK-NUT -		1
-12	AN316-5	••CHECK-NUT - (REWORK PER EO 05-5E-6A/35)	001-370	2
	AN316-5	••CHECK-NUT -	371-726	1
	NAS509-5	••NUT -	371-726	1
	NAS509-5	••NUT -	727-	2
-13	176-52258	••ROD-END - HORIZONTAL STAB. CONTROL ARTIFICIAL FEEL AT SURFACE		1
-14	NAS460-516	••WASHER -	001-726	1
-15	NAS559-1	••LOCK - (KEY TYPE)	727-	1
-16	RE4F5	••ROD-END - DOUBLE-ROW SELF-ALIGNING BEARING (FBC)	001-726	1
-17	13B-92019	••ROD-END - HORIZONTAL STAB. CTL FEEL BUNGEE (MAKE FROM RE4F5) (FBC)	727-	1
-18	AN173-10	•BOLT - (BUNGEE END TO VALVE LEVER ATT)		1
	AN960D10L	•WASHER -		2
	AN310-3	•NUT -		1
	AN381-2-2	•COTTER-PIN -		1
-19	176-52263-800	•BRACKET ASSY - HORIZONTAL STAB. CONTROL ARTL FEEL TRIM ACTUATOR BELL-CRANK (AS PER EO 05-5E-6A/13)		1
-20	176-52264-800	••ANGLE - HORIZONTAL STABILIZER CONTROL ARTIFICIAL FEEL AT SURFACE STBD SIDE (AS PER EO 05-5E-6A/13)		1
-21	176-52265	••ANGLE - HORIZONTAL STABILIZER CONTROL ARTIFICIAL FEEL AT SURFACE PORT SIDE		1
	176-52224-5	••BELL-CRANK ASSY - HORIZONTAL STAB. CTL ARTIFICIAL FEEL AT SURFACE		1
-22	176-52224-3	•••BELL-CRANK - HORIZONTAL STAB. CONTROL ARTIFICIAL FEEL AT SURFACE		1
-23	AN944-101	•••FITTING -		1
-24	4B16CF4-12	•••BEARING - SINTERED OIL IMPREGNATED (NAA)		2
-25	AN174-27	••BOLT - MPI (BELL-CRANK TO ANGLE ATT)	001-200	1
	NAS464-4-39	••BOLT - MPI (BELL-CRANK TO ANGLE ATT)	201-	1
	AN960D416	••WASHER -	001-200	1
	AN960D416	••WASHER -	201-	2
	AN310-4	••NUT -	001-100	1
	AN320-4	••NUT -	101-	1
	AN380-2-2	••COTTER-PIN -		1

FIGURE AND INDEX NUMBER	GROUP FLIGHT CONTROLS MAJOR ASSEMBLY HORIZONTAL STABILIZER CONTROL ARTIFICIAL FEEL PART NUMBER	1234567 NOMENCLATURE	CODE	UNITS PER ASSY
134 -	AN960D416	•WASHER -		4
-26	AN365-428	•NUT -		4
	227-54705-800	•SWITCH ASSY - HORIZONTAL STABILIZER TRIM TAKE-OFF INDICATOR LIGHT (FOR LOWER CODE SEE SECTION 10)	663-	1
-27	13B-53024	••SUPPORT - HORIZONTAL STABILIZER TRIM TAKE-OFF INDICATOR LIGHT SWITCH	663-	1
-28	AN3234-1	••SWITCH -	663-	1
-29	181-520184	••INSULATOR - ELECTRICAL SWITCH	663-	1
-30	JV5	••ACTUATOR - V3 SWITCH (MSC)	663-	1
-31	AN515-4R12	••SCREW - (SWITCH TO SUPPORT ATTACHING)	663-	1
	2W18-4L	••WASHER - FLAT (NAA)	663-	2
	AN365-440	••NUT -	663-	2
-32	AN520-10R10	•SCREW - (SUPPORT ATTACHING)	663-	2
	2W18-10	•WASHER - FLAT (NAA)	663-	2
-33	29656-6	•ACTUATOR ASSY - (HCO) (LINEAR)		1
	34656	•ACTUATOR ASSY - (HCO) (LINEAR)		1
-34	202-54709	•CAM - HORIZONTAL STAB. TRIM TAKE-OFF LIGHT INDICATOR SWITCH	663-	1
-35	NAS464-4-47	•BOLT - (AS PER EO 05-5E-6B/14)		1
	AN960D416	•WASHER -	001-200	1
	AN960D416L	•WASHER -	201-	1
	AN310-4	•NUT -	001-100	1
	AN320-4	•NUT -	101-	1
	AN380-2-2	•COTTER-PIN -		3
-36	AN174-6A	•BOLT - MPI (ACTUATOR ATTACHING)		1
	AN960D416	•WASHER -	001-200	1
	AN960D416L	•WASHER -	201-	1
	AN365-428	•NUT -		1
-37	AN3-14A	•BOLT - (AS PER EO 05-5E-6A/30)		1
	191-52210	•SPACER - HORIZONTAL STAB. CONTROL TRIM ACTUATOR LOWER ATTACHMENT (AS PER EO 05-5E-6A/30)		1
	AN960-10	•WASHER - (AS PER EO 05-5E-6A/30)		3
	AN365-1032	•NUT - (AS PER EO 05-5E-6A/30)		1
-38	170-23416-7	FITTING - HOR/STAB CONTROL ACTUATOR UPPER ATTACHMENT (SEE SECTION 2)		REF
-39	176-52242	BRACKET - HORIZONTAL STABILIZER CONTROL ARTL FEEL AT SURFACE (SEE SECTION 2)		REF
		(CONTINUED SEE FIG. 137)		



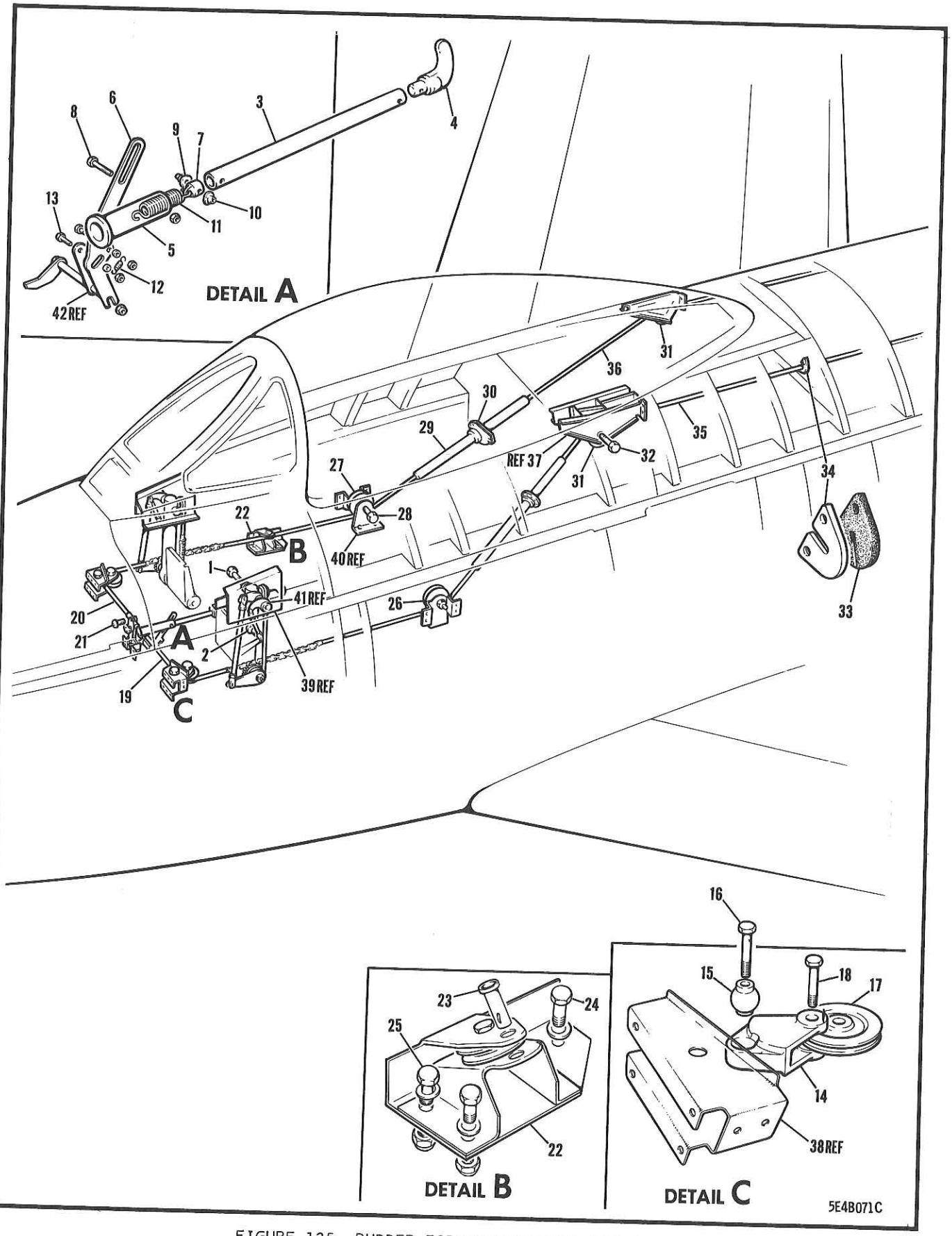

FIGURE 135 RUDDER FORWARD SURFACE CONTROL

FIGURE AND INDEX NUMBER	GROUP FLIGHT CONTROLS MAJOR ASSEMBLY RUDDER FORWARD SURFACE CONTROL PART NUMBER	1234567 NOMENCLATURE	CODE	UNITS PER ASSY
135 -	176-52031	SURFACE CONTROL INSTL - FUSELAGE FORWARD (SEE FIG. 130)		REF
- 1	AN4-47A	•BOLT - MPI (BELL-CRANK TO ARM ATTACHING)		2
	AN960D416	•WASHER -		2
	2W1-16-38-63	•WASHER - PLAIN (NAA)		2
	AN365-428	•NUT -		2
- 2	AN23-10	•BOLT - MPI (TUBE TO ARM ATTACHING)		2
	AN960D10	•WASHER -		2
	AN320-3	•NUT - MPI		2
	AN380-2-2	•COTTER-PIN -		NP
	176-52425	•LOCK INSTL - RUDDER CONTROL GUST		1
	151-52020-5	••LOCK-TUBE ASSY - SURFACE CONTROL		1
- 3	151-52021-5	•••LOCK-TUBE - SURFACE CONTROL		1
	151-52031	•••PIN - LOCKING TUBE ANTI-ROTATION		1
- 4	151-52038	•••HANDLE - LOCK-TUBE OPERATING		1
- 5	151-52056	••STOP - LOCK RETRACTING SPRING		1
- 6	176-52428	••LINK - GUST LOCK		1
- 7	151-52034	••FITTING - SPRING ATTACHING		1
- 8	AN23-34	••BOLT - (LINK TO TUBE ATTACHING)		2
	2W1-18-18-32	••WASHER - PLAIN (NAA)		1
- 9	176-52431	••SPACER - GUST LOCK LINK		1
-10	151-52035-5	••WASHER - GUST LOCK LINK ATTACHING		1
	AN320-3	••NUT -		1
	AN380-2-2	••COTTER-PIN -		1
-11	151-52026	••SPRING - LOCK-TUBE RETRACTING		1
-12	170-52033	••SPRING - TENSION		1
-13	AN3-7A	••BOLT - (SPRING TO LINK & LOCK ATTACHING)		2
	NAS43DD-3-18	••SPACER -		1
	NAS43DD-3-20	••SPACER -		1
	AN960D516	••WASHER -		1
	NAS43DD-3-8	••SPACER -		1
	AN365-1032	••NUT -		2
-14	157-52481	•BRACKET - RUDDER CONTROL BUS CABLE SWIVEL		2
-15	117-52458	•BUSHING - RUDDER BALANCE CABLE PULLEY BRACKET SUPPORT		2
-16	AN4-16A	•BOLT - MPI (BRACKET ATTACHING)		2
	AN960D416	•WASHER -		2
	AN365-428	•NUT -		2
-17	AN210-4B	•PULLEY -		2
-18	AN4-13	•BOLT - MPI (PULLEY ATTACHING)		2
	AN310-4	•NUT -		2
	AN380-2-2	•COTTER-PIN -		1
-19	151-52426	•CABLE ASSY - PILOT RUDDER BAL (PORT SIDE)		1
-20	151-52427	•CABLE ASSY - PILOT RUDDER BAL (STBD SIDE)		1
-21	AN24-15	•BOLT - MPI (CABLE TO CABLE ATTACHING)		1
	AN960D416	•WASHER -		1
	AN320-4	•NUT -		1
	AN380-2-2	•COTTER-PIN -		1
-22	170-33610	•BRACKET ASSY - LANDING GEAR EMERGENCY RELEASE PULLEY(FUS STA 94 STBD SIDE)		1
-23	NAS427K9	••PIN -		1
-24	AN4-4A	•BOLT - MPI (BRACKET ATTACHING)		2
-25	AN4-6A	•BOLT - MPI (BRACKET ATTACHING)		3
	AN960D416	•WASHER -		3
	AN365-428	•NUT -		1
-26	AN210-5B	•PULLEY - (PORT SIDE)		1
	AN6-13A	•BOLT - MPI (PULLEY ATTACHING)		1
	AN960D616	•WASHER -		1
-27	AN210-4B	•PULLEY - (STARBOARD SIDE)		1
-28	AN4-11A	•BOLT - MPI (PULLEY ATTACHING)		

FIGURE AND INDEX NUMBER	GROUP FLIGHT CONTROLS MAJOR ASSEMBLY RUDDER FORWARD SURFACE CONTROL PART NUMBER	1234567 NOMENCLATURE	CODE	UNITS PER ASSY
135 -	AN960D416	•WASHER -		2
-29	140-52031	•TUBE - CABLE SEAL 5/32		4
-30	130-52650	•SEAL - SINGLE CABLE ELASTIC PRESSURE 3/16		2
-31	AN210-4B	•PULLEY -		2
-32	AN4-10A	•BOLT - MPI (PULLEY ATTACHING) (PORT SIDE)		1
	AN4-11A	•BOLT - MPI (PULLEY ATTACHING) (STBD SIDE)		1
	AN960D416	•WASHER -		3
	AN365-428	•NUT -		2
	NAS427K9	•PIN -		2
	NAS427K12	•PIN -		1
-33	152-52008	•SEAL - CONTROL CABLE FUME		2
-34	152-52007	•FAIRLEAD - CONTROL CABLE FUME SEAL		2
	AN515-8R8	•SCREW - (FAIRLEAD ATTACHING)		4
	AN960D8	•WASHER -		4
	AN365-832	•NUT -		4
-35	13A-93009	•CABLE ASSY - PILOT RUDDER FORWARD CONTROL (PORT SIDE)		1
-36	13A-93008	•CABLE ASSY - PILOT RUDDER FORWARD CONTROL (STARBOARD SIDE)		1
-37	170-52020	BRACKET ASSY - HOR/STAB CTL FUS STA 134-145 PUL (SEE SECT. 3)		REF
-38	151-52402-1	BRACKET - RUDDER BALANCE CABLE LH (SEE SECTION 3)		REF
-39	151-52410-35	BRACKET ASSY - PILOT RUDDER PEDAL LH (SEE SECTION 3)		REF
-40	170-52404	BRACKET ASSY - PILOT RUDDER CONTROL RH FUSELAGE STA 105 (SEE SECTION 3)		REF
-41	151-52418-9	BELL-CRANK ASSY - PILOT BRAKE CTL LH MPI (SEE FIG. 136)		REF
-42	170-52429	LOCK ASSY - SURFACE CTL RUDDER(SEE SECT. 3)		REF
		(CONTINUED SEE FIG. 131)		

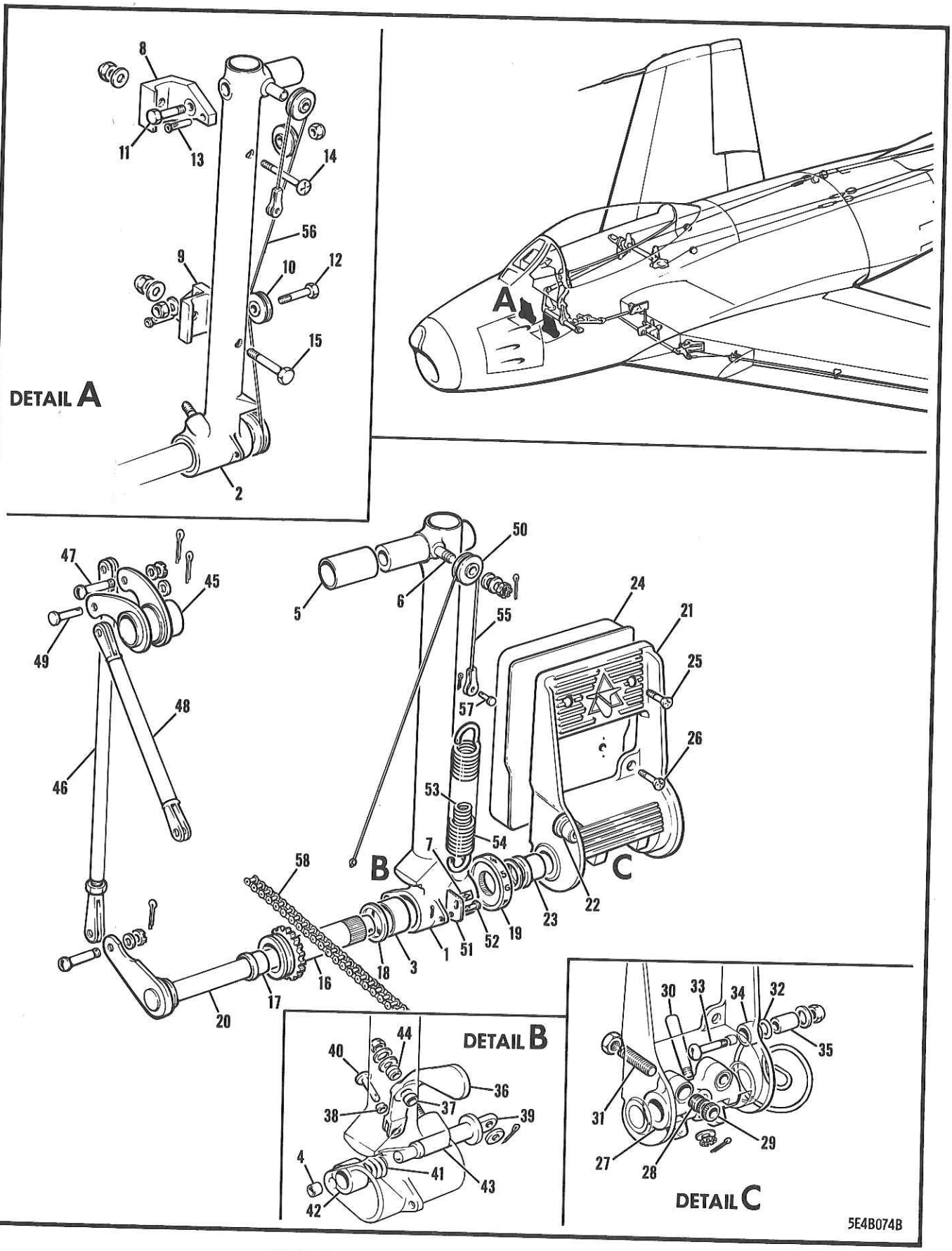

FIGURE 136 PILOT RUDDER & BRAKE PEDAL

FIGURE AND INDEX NUMBER	GROUP FLIGHT CONTROLS MAJOR ASSEMBLY PILOT RUDDER & BRAKE PEDAL PART NUMBER	1234567 NOMENCLATURE	CODE	UNITS PER ASSY
136 -	151-52419-9	PEDAL ASSY - PILOT RUDDER LH (SEE FIG. 130)		1
	151-52419-12	PEDAL ASSY - PILOT RUDDER RH (SEE FIG. 130)		1
- 1	140-52407-3	•ARM ASSY - PILOT RUDDER PEDAL LH		1
- 2	140-52407-6	•ARM ASSY - PILOT RUDDER PEDAL RH		1
- 3	140-52426	••BUSHING - PILOT BRAKE PEDAL PIVOT SOCKET		2
	4B16CP3-9	••BEARING - SINTERED OIL IMPREGNATED (NAA)		1
- 4	4B16CP5-6	••BEARING - SINTERED OIL IMPREGNATED (NAA)		1
- 5	140-52432	••BUSHING - PILOT BRAKE BELL-CRANK		1
- 6	NAS183-3-6	••STUD -		1
	NAS183-3-6A	••STUD -		1
- 7	140-52463	•DECALCOMANIA - RUDDER PEDAL POSN INDICATOR		1
- 8	172-52416	•BRACKET - RUDDER PEDAL ADJUSTING CABLE UPPER PULLEY (RH)		1
- 9	172-52417	•BRACKET - RUDDER PEDAL ADJUSTING CABLE LOWER PULLEY (RH)		2
-10	AN210-1A	•PULLEY - (RH)		1
-11	AN173-7A	•BOLT - (PULLEY TO BRACKET ATTACHING) (RH)		1
	AN365-1032	•NUT - (RH)		1
-12	AN173-11A	•BOLT - (PULLEY TO BRACKET ATTACHING) (RH)		1
	AN960D10	•WASHER - (RH)		1
	AN365-1032	•NUT - (RH)		2
-13	NAS427T6	•PIN - (RH)		1
-14	NAS222-29	•SCREW - (UPPER PULLEY BRACKET ATT) (RH)		1
-15	AN174-17A	•BOLT - (LOWER PULLEY BRACKET ATT) (RH)		2
	AN960D416	•WASHER - (RH)		2
	AN364-428	•NUT - (RH)		1
	151-52423-1	•SPROCKET ASSY - RUDDER PEDAL ADJUSTING LH		1
	151-52423-2	•SPROCKET ASSY - RUDDER PEDAL ADJUSTING RH		1
-16	140-52408-1	••SPROCKET ASSY - PILOT RUDDER PEDAL ADJUSTING MPI (LH)		1
	140-52408-2	••SPROCKET ASSY - PILOT RUDDER PEDAL ADJUSTING MPI (RH)		1
-17	4B16CF10-29	•••BEARING - SINTERED OIL IMPREGNATED (NAA)		1
	4B16CP10-20	•••BEARING - SINTERED OIL IMPREGNATED (NAA)		1
	151-52422	••PIN - RUDDER PEDAL ADJUSTING STOP		AR
-18	2W1-65-46-20	•WASHER - PLAIN (NAA)		1
-19	140-52420-1	•INDICATOR - PILOT RUDDERPEDAL ADJ (LH)		1
	140-52420-2	•INDICATOR - PILOT RUDDER PEDAL ADJ (RH)		AR
	2W1-42-36-20	•WASHER - PLAIN (NAA)		1
-20	151-52412-1	•PIVOT ASSY - PILOT BRAKE PEDAL LH MPI		1
	151-52412-2	•PIVOT ASSY - PILOT BRAKE PEDAL RH MPI		1
-21	140-52402-3	•PEDAL ASSY - PILOT BRAKE		2
-22	1P7	••PLUG - CONTROL STOP (NAA)		2
-23	4B16CF10-28	••BEARING - SINTERED OIL IMPREGNATED (NAA)		1
-24	140-52403-15	•PAD ASSY - PILOT BRAKE PEDAL		2
-25	AN509-10R13	•SCREW - (PAD TO PEDAL ATTACHING)		2
-26	NAS205-10	•SCREW - (PAD TO PEDAL ATTACHING)		1
-27	161-52403	•STOP - PILOT BRAKE PEDAL ADJUSTABLE		2
-28	R206SH-8	••INSERT - LOCKED-IN (ROS)		2
-29	RL28SB-8	••LOCK-RING - STANDARD (ROS)		2
-30	AN386-2-10	•PIN - MPI (STOP TO PIVOT ATTACHING)		2
	AN975-3	•WASHER -		2
	AN320-3	•NUT -		2
	AN380-2-2	•COTTER-PIN -		2
-31	161-52404	•BOLT - PILOT BRAKE PEDAL ADJUSTABLE STOP		2
	AN316-4	•CHECK-NUT -		1
-32	140-52459	•SPRING - RUDDER PEDAL RETURN		1
-33	NAS202-832-20	•SCREW - (SPRING TO PEDAL ATTACHING)		1
-34	4S3D516-4	•SPACER - BOLT (NAA)		1
-35	4S3D8-8	•SPACER - BOLT (NAA)		

FIGURE AND INDEX NUMBER	PART NUMBER	1234567 NOMENCLATURE	CODE	UNITS PER ASSY
	GROUP FLIGHT CONTROLS			
	MAJOR ASSEMBLY PILOT RUDDER & BRAKE PEDAL			
136 -	2W1-12-16-31	•WASHER - PLAIN (NAA)		1
	AN365-832	•NUT -		1
-36	140-52414	•LEVER ASSY - PILOT RUDDER PEDAL ADJUSTING		1
-37	4B16CP6-10	••BEARING - SINTERED OIL IMPREGNATED (NAA)		1
-38	140-52415	••BUSHING - PILOT RUDDER PEDAL ADJUSTING LEVER FORK		2
-39	140-52416	•PIN - PILOT RUDDER PEDAL ADJUSTING MPI		1
-40	AN392-19	•PIN - (PIN TO LEVER ATTACHING)		1
	AN960-6	•WASHER -		1
	AN380-2-1	•COTTER-PIN -		1
-41	140-52425	•SPRING - COMPRESSION		1
-42	140-52421	•SPACER - PILOT RUDDER PEDAL ADJUSTING PIN		1
-43	NAS51-31	•RING - (SPACER RETAINING)		1
-44	NAS73-3-950	•BUSHING -		1
	AN960-10	•WASHER -		1
	2W1-16-22-63	•WASHER - PLAIN (NAA)		1
	AN364-1032	•NUT -		1
-45	151-52418-9	•BELL-CRANK ASSY - PILOT BRAKE CTL LH MPI		1
	151-52418-10	•BELL-CRANK ASSY - PILOT BRAKE CTL RH MPI		1
-46	151-52417	•TUBE ASSY - PILOT BRAKE MPI		1
	151-52417-5	••TUBE ASSY - PILOT BRAKE MPI		1
	AN316-4R	••CHECK-NUT -		1
	140-52451	••END - BRAKE ROD ADJUSTABLE MPI		1
-47	AN23-10	•BOLT - MPI (TUBE TO BELL-CRANK ATTACHING)		1
	AN960-10	•WASHER -		2
	AN320-3	•NUT -		2
	AN380-2-2	•COTTER-PIN -		2
-48	151-52415	•TUBE ASSY - PILOT BRAKE OUTBOARD MPI		2
-49	AN393-11	•PIN - (TUBE TO BELL-CRANK ATTACHING)		1
	AN960-10L	•WASHER -		1
	AN380-2-2	•COTTER-PIN -		1
-50	AN210-1A	•PULLEY -		1
	AN960-10	•WASHER -		1
	AN320-3	•NUT -		2
	AN380-2-2	•COTTER-PIN -		1
-51	151-52432	•CLIP - PILOT RUD PEDAL ADJUSTING SPRING		1
-52	AN392-9	•PIN - (CLIP TO ARM ATTACHING)		1
	AN380-2-1	•COTTER-PIN -		1
-53	151-52431	•SPRING - PILOT RUD PEDAL ADJUSTING INNER		1
-54	151-52430	•SPRING - PILOT RUD PEDAL ADJUSTING OUTER		1
-55	140-52418	•CABLE ASSY - PILOT RUDDER PEDAL ADJ (LH)		1
-56	172-52418	•CABLE ASSY - PILOT RUDDER PEDAL ADJ (RH)		1
-57	AN393-7	•PIN - (CABLE TO SPRING ATTACHING)		1
	AN380-2-2	•COTTER-PIN -		1
-58	140-52410	•CHAIN ASSY - PILOT RUDDER PEDAL ADJUSTING		1
	140-52410-3	••CHAIN ASSY - ROLLERLESS BUSH TYPE (MAKE FROM A35 X 23 PITCHES (BDD))		1
	TYPE B	••LINK - (BDD) (STANDARD SPRING CLIP CONN)		2

-000-



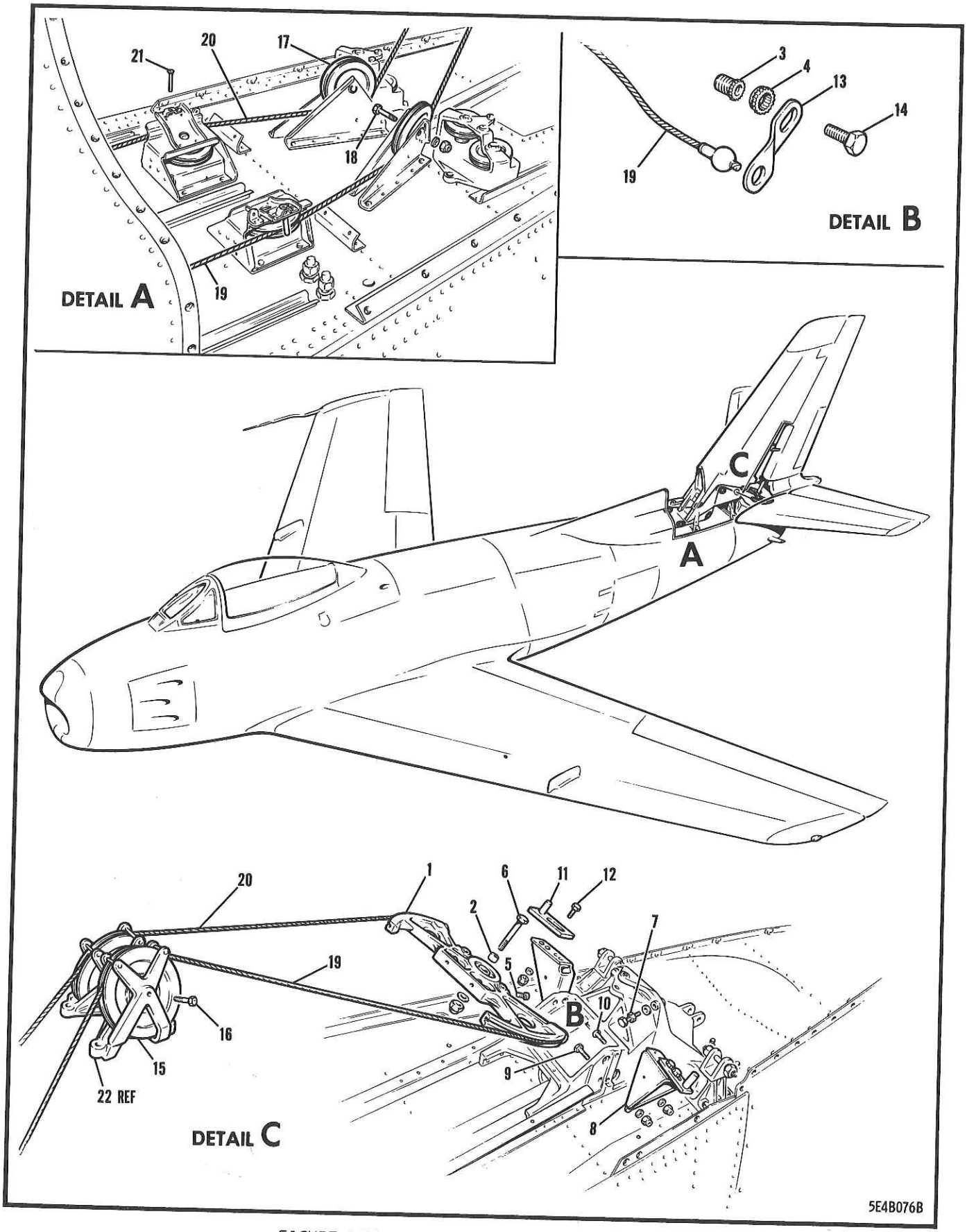

FIGURE 137 RUDDER REAR SURFACE CONTROL

FIGURE AND INDEX NUMBER	GROUP FLIGHT CONTROLS MAJOR ASSEMBLY RUDDER REAR SURFACE CONTROL PART NUMBER	1234567 NOMENCLATURE	CODE	UNITS PER ASSY
137 -	176-52032	SURFACE CONTROLS INSTL - REAR FUSELAGE (SEE FIG. 132)		REF
- 1	170-52403	•SECTOR ASSY - RUDDER CONTROL REAR		1
- 2	AN207D6	••BEARING -		1
- 3	RD205SH-5.5L	••INSERT - LOCKED-IN (ROS)		2
- 4	RL24SB-7	••LOCK-RING - STANDARD (ROS)		2
- 5	1P7	••PLUG - CONTROL STOP (NAA)		2
- 6	AN176-21A	•BOLT - MPI (SECTOR PIVOT BOLT)		1
	AN960D616	•WASHER -		1
	AN365-624	•NUT -		1
- 7	NAS428-4-14	•BOLT - (SECTOR STOP ADJUSTING)		2
	AN960D416	•WASHER -		2
	AN316-4R	•CHECK-NUT -		2
- 8	170-52432-803	•GUARD ASSY - RUDDER SECTOR CTL CABLE PORT		1
	170-52432-2	•GUARD ASSY - RUDDER SECTOR CTL CABLE STBD		1
- 9	AN3-7A	•BOLT - MPI (GUARD ATTACHING)		2
-10	AN509-10-13	•SCREW - (GUARD ATTACHING)		2
	AN960D10	•WASHER -		4
	AN365-1032	•NUT -		4
-11	170-52435	•GUARD ATTACHMENT ASSY - RUDDER SECTOR CONTROL CABLE		2
-12	AN3-5A	•BOLT - MPI (ATTACHMENT TO GUARD ATTACHING)		4
	AN960D10	•WASHER -		4
	AN365-1032	•NUT -		4
	NAS427T17	•PIN -		2
-13	140-52017	•RETAINER - SINGLE CABLE		2
-14	AN3H3A	•BOLT - MPI (RETAINER TO SECTOR ATT)		1
	AN3H4A	•BOLT - MPI (RETAINER TO SECTOR ATT)		1
-15	AN210-5B	•PULLEY -		2
-16	AN6-16A	•BOLT - MPI (PULLEY TO BRACKET ATT)		2
	AN960D616	•WASHER -		2
	AN365-624	•NUT -		2
-17	AN210-4B	•PULLEY -		2
-18	AN4-10A	•BOLT - MPI (PULLEY TO BRACKET ATT)		2
	AN960D416	•WASHER -		2
	AN365-428	•NUT -		2
-19	13A-93013	•CABLE ASSY - RUDDER CONTROL REAR PORT SIDE		1
	13A-93013-3	••CABLE - RUDDER CONTROL REAR PORT SIDE		1
	AN669L5LH	••TERMINAL -		1
	AN664C5	••TERMINAL -		1
-20	13A-93010	•CABLE ASSY - RUDDER CONTROL REAR STBD SIDE		1
	13A-93010-3	••CABLE - RUDDER CONTROL REAR STBD SIDE		1
	AN669L5LH	••TERMINAL -		1
	AN664C5	••TERMINAL -		1
-21	NAS427T16	•PIN -		2
-22	151-52424-1	BRACKET ASSY - RUDDER CONTROL FUS STA 377 PORT SIDE (SEE SECTION 2)		REF
		(CONTINUED SEE SECTION 11)		

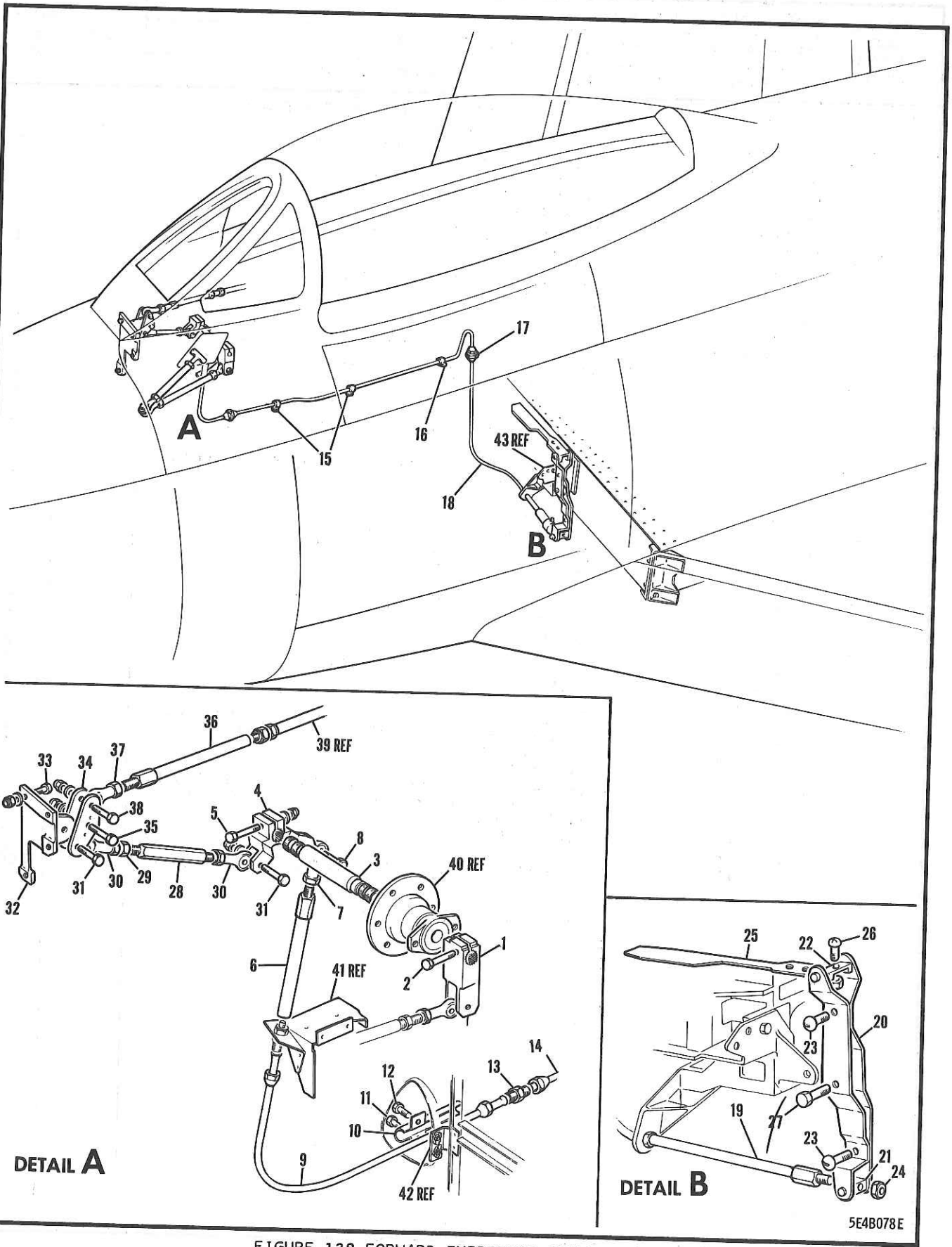

FIGURE 138 FORWARD EMERGENCY CHANGE-OVER
(EFFECTIVE AIRCRAFT 23001 TO 23210 INCL)

FIGURE AND INDEX NUMBER	GROUP FLIGHT CONTROLS MAJOR ASSEMBLY FORWARD EMERGENCY CHANGE-OVER PART NUMBER	1234567 NOMENCLATURE	CODE	UNITS PER ASSY
138 -	13A-96050	SURFACE CONTROL INSTL - MANUAL ALTR CH/OV COMPL (SEE FIG. 1)	001-210	NP
- 1	172-52065-10	•ARM - MANUAL EMY CH/OV INBOARD BELL-CRANK	001-210	1
- 2	AN3-10A	•BOLT -	001-210	1
- 3	172-52064	•SHAFT - MANUAL EMY CHANGE-OVER BELL-CRANK	001-210	1
- 4	172-52066	•ARM - MANUAL EMY CH/OV OUTBOARD BELL-CRANK	001-210	1
- 5	AN3-11A	•BOLT - MPI	001-210	1
	AN960D10L	•WASHER -	001-210	1
	AN365-1032	•NUT -	001-210	1
- 6	C6334-11	•TELESCOPIC UNIT - (TEL)	001-210	1
	AN316-4R	•NUT -	001-210	1
- 7	RE3F4	•ROD-END - DOUBLE-ROW SELF-ALIGNING BEARING (FBC)	001-210	1
- 8	AN3-10A	•BOLT - MPI	001-210	1
	AN960D10L	•WASHER -	001-210	1
	AN365-1032	•NUT -	001-210	1
- 9	13A-96052-109	•CONDUIT ASSY - SUR CTL ALTR CH/OV CABLE	001-210	1
-10	172-52097	•GUARD - MANUAL EMERGENCY CH/OV CONDUIT	001-210	1
	AN742D6C	•CLAMP -	001-210	1
-11	AN3-4A	•BOLT - MPI	001-210	1
-12	AN3-5A	•BOLT - MPI	001-210	2
	AN960D10	•WASHER -	001-210	1
-13	A6329	•BODY - CONNECTOR (TEL)	001-210	1
-14	13A-96052-111	•CONDUIT ASSY - SUR CTL ALTR CH/OV CABLE	001-210	1
-15	A5506	•CLIP - CONDUIT (TEL)	001-210	2
-16	AN742D4	•CLAMP -	001-210	1
	AN520-10R8	•SCREW -	001-210	3
	AN960D10	•WASHER -	001-210	3
	AN365-1032	•NUT -	001-210	3
-17	A6602	•CONNECTOR - (TEL)	001-210	1
	AN960D816	•WASHER -	001-210	1
	AN924-5D	•NUT -	001-210	1
-18	172-52052-133	•CONDUIT ASSY - SUR CTL ALTR CH/OV CABLE	001-210	1
	13A-96051-7	•CABLE - SURFACE CONTROL ALTERNATE CHANGE-OVER (FORWARD)	001-210	1
-19	C6334-11	•TELESCOPIC UNIT - (TEL)	001-210	1
	172-520119	•BELL-CRANK ASSY - SURFACE CTL MANUAL EMY CHANGE-OVER WING CENTRE SECTION	001-210	1
-20	172-520119-5	••PLATE - BELL-CRANK	001-210	1
	172-520119-3	••PLATE - BELL-CRANK	001-210	1
-21	172-520121	••BLOCK - MANUAL EMY CH/OV BELCRK SWIVEL	001-210	1
-22	172-520122	••PLATE - MANUAL EMY CH/OV SWIVEL CTR/SECT	001-210	2
-23	AN515-C8R8	••SCREW -	001-210	2
	AN960D8	••WASHER -	001-210	2
	AN365-832	••NUT -	001-210	1
-24	AN316-4R	•NUT -	001-210	1
-25	172-520165	•CAM - MANUAL EMERGENCY CHANGE-OVER	001-210	1
-26	AN515-6-8	•SCREW -	001-210	1
	NAS43C-1-10	•SPACER -	001-210	1
	AN960D6L	•WASHER -	001-210	1
	AN365-632	•NUT -	001-210	1
-27	AN3-7A	•BOLT -	001-210	1
	NAS43C-3-12	•SPACER -	001-210	1
	AN960D10L	•WASHER -	001-210	1
	AN365-1032	•NUT -	001-210	1
	172-52083	•ROD ASSY - SURFACE CTL MANUAL EMY CH/OV	001-210	1
-28	172-52083-3	••ROD - MANUAL EMERGENCY CHANGE-OVER	001-210	1
-29	AN316-4	••NUT -	001-210	1
-30	RE3F4	••ROD-END - DOUBLE-ROW SELF-ALIGNING BEARING (FBC)	001-210	2

FIGURE AND INDEX NUMBER	GROUP FLIGHT CONTROLS MAJOR ASSEMBLY FORWARD EMERGENCY CHANGE-OVER PART NUMBER	1234567 NOMENCLATURE	CODE	UNITS PER ASSY
138 -31	AN3-10A	•BOLT - MPI	001-210	2
	AN960D10L	•WASHER -	001-210	2
	AN365-1032	•NUT -	001-210	2
-32	172-52085	•SUPPORT ASSY - SURFACE CONTROL EMY CH/OV	001-210	1
	AN200KP3	••BEARING -	001-210	1
-33	AN3-6A	•BOLT - MPI	001-210	4
	AN960D10L	•WASHER -	001-210	4
	AN365-1032	•NUT -	001-210	4
-34	172-52084	•BELL-CRANK ASSY - SURFACE CONTROL MAN. EMY CHANGE-OVER FWD	001-210	2
-35	AN3-10A	•BOLT - MPI	001-210	1
	AN960D10L	•WASHER -	001-210	1
	AN365-1032	•NUT -	001-210	1
-36	C6334-11	•TELESCOPIC UNIT - (TEL)	001-210	1
	AN316-4R	•NUT -	001-210	1
-37	RE3F4	•ROD-END - DOUBLE-ROW SELF-ALIGNING BEARING (FBC)	001-210	1
-38	AN3-10A	•BOLT -	001-210	1
	AN960D10L	•WASHER -	001-210	1
	AN365-1032	•NUT -	001-210	1
-39	172-52052-153	CONDUIT ASSY - SURFACE CTL MAN. EMY CH/OV (SEE FIG. 139)		REF
-40	172-52061	SUPPORT ASSY - SURFACE CTL MANUAL EMY CH/OV (SEE SECTION 3)		REF
-41	172-52071	BRACKET ASSY - SURFACE CTL MANUAL EMY CH/OV (SEE SECTION 3)		REF
-42	172-52096	BRACKET ASSY - SURFACE CTL MANUAL EMY CH/OV CONDUIT GUARD SUPPORT (SEE SECT. 3)		REF
-43	172-52047-13	BRACKET ASSY - SURFACE CTL MANUAL EMY CH/OV (SEE SECTION 11)		REF
		(CONTINUED SEE FIG. 139)		

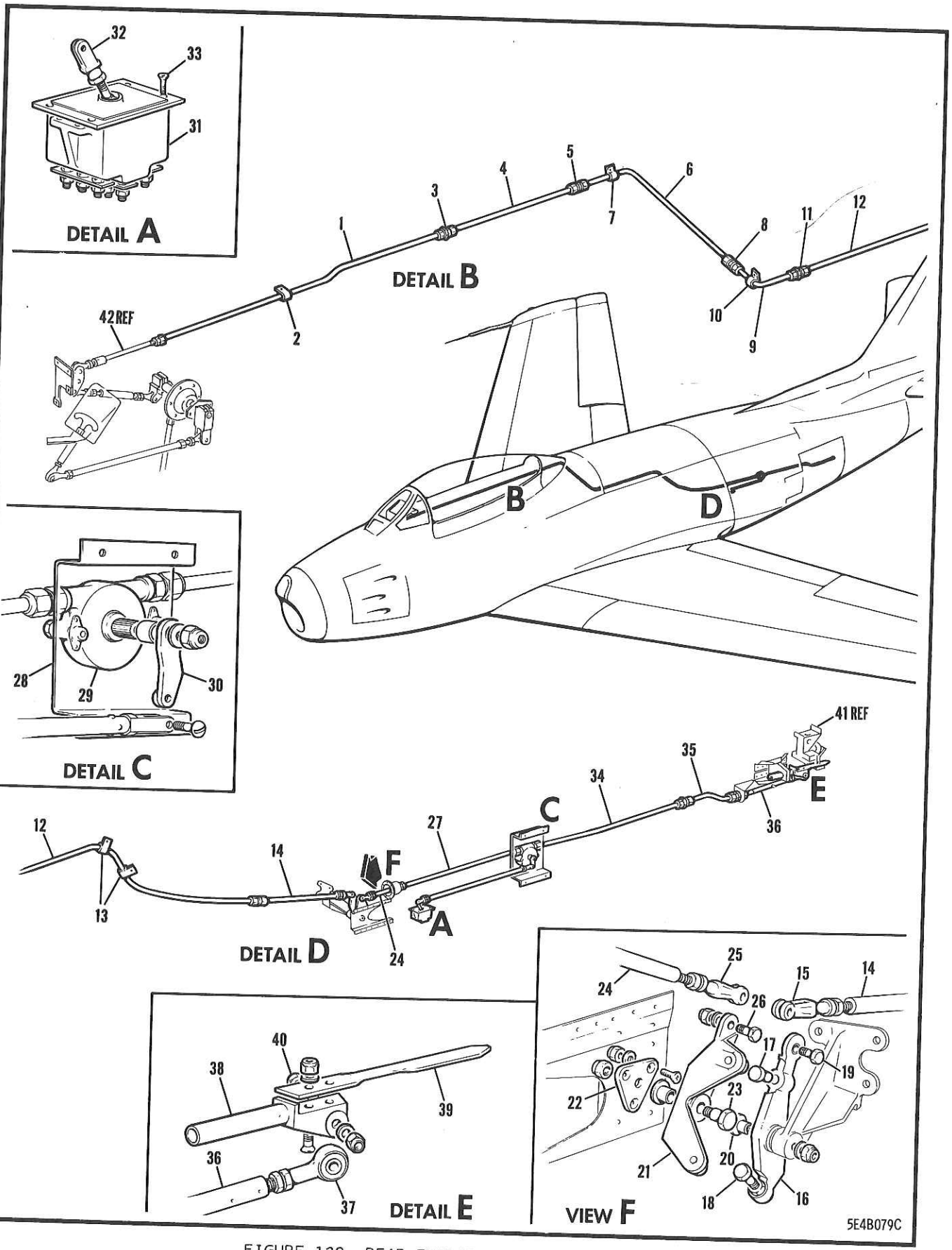

FIGURE 139 REAR EMERGENCY CHANGE-OVER
(EFFECTIVE AIRCRAFT 23001 TO 23210 INCL)

FIGURE AND INDEX NUMBER	GROUP FLIGHT CONTROLS MAJOR ASSEMBLY REAR EMERGENCY CHANGE-OVER PART NUMBER	1234567 NOMENCLATURE	CODE	UNITS PER ASSY
139 -	13A-96050	SURFACE CONTROL INSTL - MANUAL ALTR CH/OV COMPLETE (SEE FIG. 138)	001-210	REF
- 1	172-52052-153	•CONDUIT ASSY - SURFACE CTL MAN. EMY CH/OV	001-210	1
- 2	A5506	•CLIP - CONDUIT (TEL)	001-210	1
	AN520-10R8	•SCREW -	001-210	1
	AN960D10L	•WASHER -	001-210	1
	AN365-1032	•NUT -	001-210	1
- 3	A6602	•CONNECTOR - (TEL)	001-210	1
	AN960D816	•WASHER -	001-210	1
	AN924-5D	•NUT -	001-210	1
- 4	172-52052-147	•CONDUIT ASSY - SURFACE CTL MAN. EMY CH/OV	001-210	1
- 5	A6329	•BODY - CONNECTOR (TEL)	001-210	1
- 6	172-52052-149	•CONDUIT ASSY - SURFACE CTL MAN. EMY CH/OV	001-210	1
- 7	AN742D6C	•CLAMP -	001-100	1
	A5506	•CLIP - CONDUIT (TEL)	101-210	1
	AN520-10R10	•SCREW -	001-210	1
	AN365-1032	•NUT -	001-210	1
- 8	A6329	•BODY - CONNECTOR (TEL)	001-210	1
- 9	172-52052-151	•CONDUIT ASSY - SURFACE CTL MAN. EMY CH/OV	001-210	1
-10	AN742D8C	•CLAMP -	001-210	1
	A5506	•CLIP - CONDUIT (TEL)	001-210	1
	AN520-10R8	•SCREW -	001-210	1
	AN960D10	•WASHER -	001-210	1
	AN365-1032	•NUT -	001-210	1
-11	A6602	•CONNECTOR - (TEL)	001-210	1
	AN960D816	•WASHER -	001-210	1
	AN924-5D	•NUT -	001-210	1
	13A-96051-5	•CABLE - SURFACE CTL MAN. ALTERNATE CH/OV	001-210	1
-12	13A-96052-103	•CONDUIT ASSY - SURFACE CONTROL MANUAL ALTR CHANGE-OVER CABLE	001-210	2
-13	A5506	•CLIP - CONDUIT (TEL)	001-210	2
	AN520-10R8	•SCREW -	001-210	2
	AN960D10	•WASHER -	001-210	2
	AN365-1032	•NUT -	001-210	2
	AN960D816	•WASHER -	001-210	1
-14	C6334-28	•TELESCOPIC UNIT - (TEL)	001-210	1
-15	AN486-4	•CLEVIS -	001-210	1
	AN316-4R	•NUT -	001-210	1
-16	13A-96063	•BELL-CRANK ASSY - SURFACE CTL MANUAL ALTR CH/OV DISC. FWD	001-210	1
	4B16-CP5-4	••BEARING - SINTERED OIL IMPREGNATED (NAA)	001-210	1
-17	13A-96064	••PLUG - MANUAL ALTERNATIVE CH/OV FWD DISC.	001-210	2
	4B16-RF7-8	••BEARING - SINTERED OIL IMPREGNATED (NAA)	001-210	1
	RD205SH-5.5L	••INSERT - LOCKED-IN (ROS)	001-210	1
	RL24SB-7	••LOCK-RING - STANDARD (ROS)	001-210	1
-18	NAS428-3-12	••BOLT -	001-210	1
	AN315-3R	••NUT -	001-210	1
-19	AN3-5	•BOLT -	001-210	1
	4B21-S3-005	•BUSHING - SPACER (NAA)	001-210	1
	AN960D10L	•WASHER -	001-210	1
	AN320-3	•NUT -	001-210	1
	AN380-2-3	•PIN -	001-210	1
-20	13A-96062	•PIN - SURFACE CTL MAN. ALTR CHANGE-OVER DISC. FWD SUPPORT	001-210	1
	AN960D516L	•WASHER -	001-210	1
	AN320-5	•NUT -	001-210	1
	AN380-2-3	•PIN -	001-210	1
	13A-96079	•BELL-CRANK ASSY - SURFACE CTL MANUAL ALTR CH/OV DISC. REAR	001-210	1
-21	13A-96060	••BELL-CRANK ASSY - SURFACE CTL MANUAL ALTR CH/OV DISC. REAR		

FIGURE AND INDEX NUMBER	GROUP FLIGHT CONTROLS MAJOR ASSEMBLY REAR EMERGENCY CHANGE-OVER PART NUMBER	1234567 NOMENCLATURE	CODE	UNITS PER ASSY
139 -	4B16-RF7-19	•••BEARING - SINTERED OIL IMPREGNATED (NAA)	001-210	1
	4B16-CP5-4	•••BEARING - SINTERED OIL IMPREGNATED (NAA)	001-210	1
	13A-96083	•••PLUG - MANUAL ALTR CH/OV DISC. BELCRK	001-210	2
-22	13A-96082	••PLATE - MANUAL ALTR CH/OV DISC. REAR BASE	001-210	1
-23	13A-96081	••BOLT - MANUAL ALTR CH/OV DISCONNECT REAR	001-210	1
	AN960PD516L	••WASHER -	001-210	1
	AN310-5-1	••NUT -	001-210	1
	AN380-2-4	••PIN -	001-210	1
	AN509-10R11	•SCREW -	001-210	3
-24	C6334-16	•TELESCOPIC UNIT - (TEL)	001-210	1
	AN316-4R	•NUT -	001-210	1
-25	AN486-4	•CLEVIS -	001-210	1
-26	AN3-5A	•BOLT -	001-210	1
	AN960D10L	•WASHER -	001-210	1
	4B21-S3-005	•BUSHING - SPACER (NAA)	001-210	1
	AN365-1032	•NUT -	001-210	1
-27	13A-96052-105	•CONDUIT ASSY - SURFACE CONTROL MANUAL ALTR CHANGE-OVER CABLE	001-210	1
-28	13A-96068	•BRACKET ASSY - SURFACE CTL MAN. ALTR CH/OV SW CTL BOX SUPPORT	001-210	1
	AN3C4	•BOLT -	001-210	4
	AN960D10	•WASHER -	001-210	4
	AN361-1032	•NUT -	001-210	4
-29	C6808-3	•BOX - SINGLE STRAIGHT LEAD CONTROL (TEL)	001-210	1
	AN3-11A	•BOLT - MPI	001-210	2
	NAS43DD-3-4	•SPACER -	001-210	2
-30	13A-96065	•BELL-CRANK - SURFACE CONTROL MANUAL ALTR CH/OV SWITCH ACTE	001-210	1
	NAS43DD-6-18	•SPACER -	001-210	1
	AN960D616	•WASHER -	001-210	1
	AN365-524	•NUT -	001-210	1
	13A-96072	•SWITCH ASSY - ELEC PWR CTL MAN. OVERRIDE	001-210	1
-31	S23-3B-1A	••SWITCH - (CSI)	001-210	1
-32	13A-96073	••FORK-END - MANUAL CH/OV SWITCH OPERATING	001-210	1
	AN316-4R	••NUT -	001-210	1
-33	AN515-8R8	•SCREW -	001-210	4
	AN960D8L	•WASHER -	001-210	4
	13A-96051-3	•CABLE - SURFACE CTL MANUAL ALTERNATE CH/OV	001-210	1
-34	13A-96052-107	•CONDUIT ASSY - SURF CTL ALTR CH/OV CABLE	001-210	1
	A6602	•CONNECTOR - (TEL)	001-210	1
	AN960D816	•WASHER -	001-210	1
	AN924-5	•NUT -	001-210	1
-35	172-52052-103	•CONDUIT ASSY - MANUAL EMERGENCY CH/OV	001-210	1
-36	C6334-11	•TELESCOPIC UNIT - (TEL)	001-210	1
	AN316-4R	•NUT -	001-210	1
-37	RE3F4	•ROD-END - DOUBLE-ROW SELF-ALIGNING BEARING (FBC)	001-210	1
-38	172-52091	•CLEVIS - SURFACE CTL MANUAL EMY CH/OV CAM	001-210	1
-39	172-520165	•CAM - MANUAL EMERGENCY CHANGE-OVER	001-210	1
	AN509-10R10	•SCREW -	001-210	2
	AN365-1032	•NUT -	001-210	1
-40	AN3-10A	•BOLT - MPI	001-210	1
	AN960D10L	•WASHER -	001-210	1
	AN365-1032	•NUT -	001-210	1
-41	165-52041	BRACKET ASSY - SURFACE CTL MAN. EMY CH/OV (SEE SECTION 11)		REF
-42	C6334-11	TELESCOPIC UNIT - (TEL) (SEE FIG. 138)		REF

-000-

SECTION 8
INSTRUMENT EQUIPMENT

TABLE OF CONTENTS

FIGURE	TITLE	PAGE
140	PILOT INSTRUMENT PANEL	648
141	FORWARD FUSELAGE INSTRUMENT EQUIPMENT	656
142	INSTRUMENT PANEL SHROUD	660
143	CENTRE WING INSTRUMENT EQUIPMENT	662
144	PORT OUTER WING INSTRUMENT EQUIPMENT	664
145	STARBOARD OUTER WING INSTRUMENT EQUIPMENT	666
146	FUSELAGE STA 72-145 INSTRUMENT EQUIPMENT	668
147	FUSELAGE STA 145-253 INSTRUMENT EQUIPMENT	670
148	TAIL-PIPE HARNESS & INSTRUMENT EQUIPMENT	672

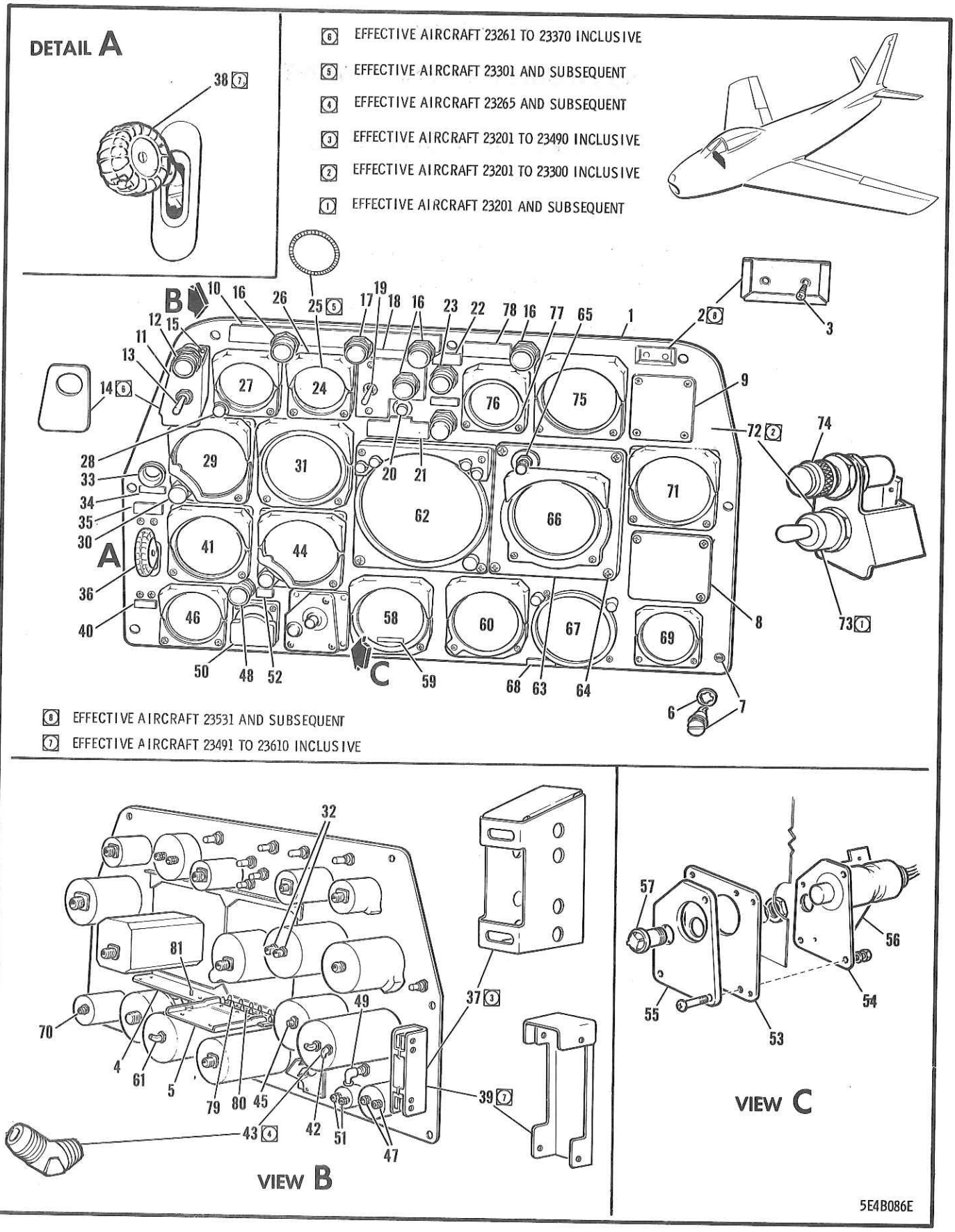

FIGURE 140 PILOT INSTRUMENT PANEL

FIGURE AND INDEX NUMBER	GROUP / MAJOR ASSEMBLY / PART NUMBER	INSTRUMENT EQUIPMENT / PILOT INSTRUMENT PANEL / 1234567 NOMENCLATURE	CODE	UNITS PER ASSY
140 -	13A-51005	PANEL ASSY - PILOT INSTRUMENT COMPLETE (SEE FIG. 141)	A7	1
	13A-51005-800	PANEL ASSY - PILOT INSTRUMENT COMPLETE	A6	1
	13A-51005-801	PANEL ASSY - PILOT INSTRUMENT COMPLETE	371-410	1
	13A-51005-802	PANEL ASSY - PILOT INSTRUMENT COMPLETE	411-490	1
	13A-51005-804	PANEL ASSY - PILOT INSTRUMENT COMPLETE	E2	1
	13A-51005-806	PANEL ASSY - PILOT INSTRUMENT COMPLETE	G5	1
	13A-51005-808	PANEL ASSY - PILOT INSTRUMENT COMPLETE	720-	1
	13A-51003	•PANEL ASSY - PILOT INSTRUMENT	A7	1
	13A-51003-800	•PANEL ASSY - PILOT INSTRUMENT	A6	1
	13A-51003-801	•PANEL ASSY - PILOT INSTRUMENT	371-410	1
	13A-51003-802	•PANEL ASSY - PILOT INSTRUMENT	411-490	1
	13A-51003-804	•PANEL ASSY - PILOT INSTRUMENT	E2	1
	13A-51003-806	•PANEL ASSY - PILOT INSTRUMENT	G5	1
	13A-51003-808	•PANEL ASSY - PILOT INSTRUMENT	720-	1
	13A-51003-812	•SPARE PART ASSY FOR 13A-51003-804 & 13A-51003-806 & 13A-51003-808	491-	
- 1	13A-51003-3	••PANEL ASSY - PILOT INSTRUMENT	A7	1
	13A-51003-103	••PANEL ASSY - PILOT INSTRUMENT	A6	1
	13A-51003-203	••PANEL ASSY - PILOT INSTRUMENT	371-490	1
	13A-51003-213	••PANEL ASSY - PILOT INSTRUMENT	E2	1
	13A-51003-313	••PANEL ASSY - PILOT INSTRUMENT	G5	1
	13A-51003-413	••PANEL - PILOT INSTRUMENT	720-	1
- 2	13A-51039	•••HOLDER - PILOT INSTRUMENT PANEL CARD	531-	1
	13A-51040	•••CARD - PILOT INSTRUMENT PANEL	531-	1
- 3	AN507-440R6	•••SCREW - (HOLDER ATTACHING)	531-	2
	AN365-440	•••NUT -	531-	2
	13A-51003-215	••SUPPORT ASSY - (TERMINAL STRIP) (AS PER EO 05-5E-6A/108)		1
- 4	13A-51003-111	•••ANGLE - (TERMINAL STRIP SUPPORT)		1
- 5	13A-51003-113	•••SUPPORT - (TERMINAL STRIP)		1
- 6	2700-LW	••LOCK-WASHER - STUD RETAINING (CFC)		8
- 7	2700-6	••STUD - FLUSH (CFC)		8
	2700-SW	••WASHER - STUD RETAINING (CFC)	301-	8
- 8	13A-51003-102	••PLATE - INSTRUMENT PANEL BLANKING (AS PER EO 05-5E-6A/199)	001-370	1
	AN515-6R6	••SCREW - (BLANKING PLATE ATTACHING) (AS PER EO 05-5E-6A/199)	001-370	3
	AN365-632	••NUT - (AS PER EO 05-5E-6A/199)	001-370	3
- 9	13A-51003-100	••PLATE - BLANKING (AS PER EO 05-5E-6A/273)	001-370	1
	AN515B6R6	••SCREW - (PLATE ATTACHING)	001-370	1
	AN365-632	••NUT -	001-370	1
	237-EAU	•RELAY ASSY - 10-AMP RESISTIVE 29-VDC (LRC) (EMERGENCY LDG/GR RETRACTING SYSTEM) (AS PER EO 05-5E-6A/199)	001-370	1
	AN515-6R8	•SCREW - (AS PER EO 05-5E-6A/199)	001-370	2
	AN960-6L	•WASHER -	001-370	2
	AN365-632	•NUT -	001-370	2
-10	172-51111	•DECALCOMANIA - INVERTER OFF WARNING LIGHT		1
	13A-51016	•BRACKET ASSY - ELECTRICAL EMERGENCY FUEL SWITCH & LIGHT	001-370	1
	13A-51016-10	•BRACKET ASSY - ELECTRICAL EMERGENCY FUEL SWITCH & LIGHT	371-530	1
	13A-51016-20	•BRACKET ASSY - ELECTRICAL EMERGENCY FUEL SWITCH & LIGHT	531-	1
-11	13A-51016-2	••BRACKET - ELECTRICAL EMERGENCY FUEL SWITCH & LIGHT		1
-12	AN3157-4	••LIGHT ASSY - PRESS-TO-TEST INDICATOR		1
	AN3121-313	••LAMP -		1
-13	AN3021-2	••SWITCH - ONE-HOLE MOUNTING SP TOGGLE	001-370	1
	AN3027-3	••SWITCH - ONE-HOLE MOUNTING DP TOGGLE	371-	1
	2B2C-7	••BUS-BAR - (NAA)	371-	1
-14	13A-51061	•PLACARD - EMERGENCY & TAKE-OFF ENGINE FUEL PUMP WARNING	261-370	1

FIGURE AND INDEX NUMBER	GROUP / MAJOR ASSEMBLY / PART NUMBER	INSTRUMENT EQUIPMENT / PILOT INSTRUMENT PANEL / 1234567 NOMENCLATURE	CODE	UNITS PER ASSY
140 -	13A-51064	•PLACARD - EMERGENCY FUEL SWITCH ELECTRICAL WARNING	371-530	1
	AN931-4-7	•GROMMET -		1
-15	AN507-632R7	•SCREW - (BRACKET ATTACHING)		3
	AN365-632	•NUT -		3
-16	AN3157-4	•LIGHT ASSY - PRESS-TO-TEST INDICATOR		4
	AN3121-313	•LAMP -		4
	AN781-2	•NIPPLE -		4
-17	AN3157-6	•LIGHT ASSY - PRESS-TO-TEST INDICATOR		1
	AN3121-313	•LAMP -		1
	AN781-2	•NIPPLE -		1
-18	191-51112	•DECALCOMANIA - ELEC HYD PRESS. SELECTOR SW		1
-19	4AT4	•SWITCH - (MSC) (HYDRAULIC PRESS. SELECTOR)		1
	AN515B6R7	•SCREW -		2
	AN515-4R4	•SCREW -	201-	6
	AN936B4	•LOCK-WASHER -	201-	12
	AN961-4	•WASHER -	201-	6
-20	C3100DB3	•SWITCH - PUSH-BUTTON (HET)	001-490	1
	W102DB3	•SWITCH - PUSH-BUTTON SPST NORMALLY CLOSED (HET)	491-	1
-21	13A-51023	•DECALCOMANIA - J2 COMP SYS FAST SLAVE SW		1
-22	13A-51008	•DECALCOMANIA - LOW FUEL PRESSURE WARNING		1
-23	AN3157-2	•LIGHT ASSY - PRESS-TO-TEST INDICATOR		1
	AN3121-313	•LAMP -		1
	AN781-2	•NIPPLE -		1
-24	SPEC 21311	•INDICATOR - HYDRAULIC PRESSURE 0-4000 PSI (G.F.E.)		1
		OR		
	MS28010-5	•INDICATOR - SYNC SINGLE 2 INCH SIZE PRESS. 0-4000 PSI(MIL-I-7084 G.F.E.)		
-25	190-51047	•DECALCOMANIA - HYDRAULIC PRESSURE IND	301-	1
-26	AN5809-1	•MOUNT -		1
	B-4751	•FIXTURE - (GMC) (INSTRUMENT LIGHTING)		1
	AN507UB632R20	•SCREW -		1
	AN507B632R20	•SCREW -		1
	AN515B6R20	•SCREW -		2
	A6939-632-125	•SPEED-NUT - CAGE TYPE (TIN)		4
-27	MIL-A-5885A(3)	•ACCELEROMETER - WARNING (G.F.E.) (LOCK RESET KNOB AS PER EO 05-5E-6A/174)	A5	1
		OR		
	SPEC 27663	•ACCELEROMETER - WARNING (G.F.E.)	A5	
		OR		
	SPEC 27663-A	•ACCELEROMETER - WARNING (G.F.E.)	A5	
		OR		
	SPEC 27663-B	•ACCELEROMETER - WARNING (G.F.E.)	A5	
		OR		
	MS28025	•ACCELEROMETER - AIRCRAFT (SPEC MIL-A-5885) (G.F.E.)	A5	
	AN5743T1A	•CLOCK - AIRCRAFT 1-7/8 INCH DIAL	G4	1
-28	B-4880	•FIXTURE - (GMC) (INSTRUMENT LIGHTING)		1
	AN507B632R20	•SCREW -		1
	AN515B6R20	•SCREW -		1
	A6939-632-125	•SPEED-NUT - CAGE TYPE (TIN)		2
-29	SPEC XH45D24627	•INDICATOR - PILOT RADIO COMPASS (G.F.E.)		1
-30	B-4757	•FIXTURE - (GMC) (INSTRUMENT LIGHTING)		1
	AN507UB632R20	•SCREW -		1
	AN507B632R20	•SCREW -		1
	AN515B6R20	•SCREW -		1
	AN515B6R18	•SCREW -		1
	A6939-632-125	•SPEED-NUT - CAGE TYPE (TIN)	201-	1
-31	MIL-1-5356(USAF)(3)	•INDICATOR - AIR-SPEED PITOT STATIC(G.F.E.)		3
		OR		1
	SPEC 21120-A	•INDICATOR - AIR-SPEED PITOT STATIC(G.F.E.)		
		OR		
	SPEC 21182A	•INDICATOR - AIR-SPEED PITOT STATIC(G.F.E.)		
		OR		
	865F25-038	•INDICATOR - AIR-SPEED PITOT STATIC(G.F.E.)		

FIGURE AND INDEX NUMBER	GROUP / MAJOR ASSEMBLY / PART NUMBER	INSTRUMENT EQUIPMENT / PILOT INSTRUMENT PANEL / 1234567 NOMENCLATURE	CODE	UNITS PER ASSY
140 -	B-4855	•FIXTURE - (GMC) (INSTRUMENT LIGHTING)		1
-32	AN816-4D	•NIPPLE -		2
	AN507B632R20	•SCREW -		2
	SK179BP6-20	•SCREW - PHILLIPS STANDARD TRUSS HEAD (AMS)		2
	A6939-632-125	•SPEED-NUT - CAGE TYPE (TIN)		4
	AN507B1032R7	•SCREW - (AS PER EO 05-5E-6A/49)	001-210	1
	AN507UB1032R7	•SCREW - (AS PER EO 05-5E-6A/49)	001-210	1
	AN936A10B	•WASHER - (AS PER EO 05-5E-6A/49)	001-210	2
	AN365-1032	•NUT - (AS PER EO 05-5E-6A/49)	001-210	2
-33	C100B9R5SH	•SWITCH - PUSH-BUTTON (HET)		1
-34	176-51112	•DECALCOMANIA - LANDING GEAR EMY UP• SWITCH		1
-35	176-51108	•DECALCOMANIA - LDG/GR CTL HANDLE UP• POSN		1
-36	13A-51005-100	•SWITCH - ELECTRICAL LANDING GEAR CONTROL (MAKE FROM 10681 NAA SPECIFICATION NA5 7750-2 (CAR))	001-490	1
-37	191-54126	•COVER - ELECTRICAL LANDING GEAR SWITCH	201-490	1
	AN515-4R4	•SCREW -	201-	12
	AN936B4	•LOCK-WASHER -	201-	24
	AN961-4	•WASHER -	201-	12
	13B-51004	•SWITCH - ELECTRICAL LANDING GEAR CONTROL	491-610	1
	13B-51004-800	•SWITCH ASSY - ELECTRICAL LDG/GR CONTROL	611-	1
	13B-51004-802	•SPARE PART ASSY FOR 13B-51004 & -800	491-	
-38	13A-51005-100	••SWITCH - ELECTRICAL LANDING GEAR CONTROL (MAKE FROM 10681 NAA SPECIFICATION NA5 7750-2 (CAR))	491-610	1
	13B-51004-2	••SWITCH - ELECTRICAL LANDING GEAR CONTROL (MAKE FROM 10681-100 NAA SPEC NA5 7750-2 (CAR))	611-	1
-39	13B-51001	••COVER - LANDING GEAR SWITCH	491-	1
	13B-51001-800	••SPARE PART ASSY FOR 13B-51001	491-	
	AN515-4R24	••SCREW -	491-	2
	AN960-4L	••WASHER -	491-	4
	AN960-8L	•WASHER -	491-	4
	AN515B8R10	•SCREW -	491-	4
-40	176-51107	•DECALCOMANIA - LANDING GEAR CTL DOWN POSN		1
-41	SPEC 27671-B	•MACHMETER - PITOT STATIC OPERATING(G•F•E•) OR		1
	SPEC Y-27671-A	•MACHMETER - PITOT STATIC OPERATING(G•F•E•) OR		
	SPEC Y-27671-B	•MACHMETER - PITOT STATIC OPERATING(G•F•E•) OR		
	SPEC MIL-M-5388A	•MACHMETER - PITOT STATIC OPERATING(G•F•E•)		
	B-4670	•FIXTURE - (GMC) (INSTRUMENT LIGHTING)		1
	AN507B632R20	•SCREW -		2
	AN515B6R20	•SCREW -		2
	A6939-632-125	•SPEED-NUT - CAGE TYPE (TIN)		4
-42	AN822-4D	•ELBOW -	001-264	1
-43	AN823-4D	•ELBOW -	265-	2
-44	RCAF REF 6A/10062	•ALTIMETER - PRESSURE 0-50000 FEET (G•F•E•) (AS PER EO 05-5E-6A/146)		1
	B-4757	•FIXTURE - (GMC) (INSTRUMENT LIGHTING)		1
-45	AN816-4D	•NIPPLE - (ALTIMETER)		1
	AN507B632R20	•SCREW -		2
	AN515B6R20	•SCREW -		1
	A6939-632-125	•SPEED-NUT - CAGE TYPE (TIN)		3
-46	AN3203V30	•VOLTMETER - DIRECT-CURRENT PANEL (G•F•E•)		1
	191-51048	•SPACER - INSTRUMENT PANEL CABIN PRESSURE		2
	B-4850	•FIXTURE - (GMC) (INSTRUMENT LIGHTING)		1
	AN507UB632R20	•SCREW -		1
	AN515B6R20	•SCREW -		2
	AN507B632R20	•SCREW -		1
	2W1AL11-14-64	•WASHER - PLAIN (NAA)	101-	4
	A6939-632-125	•SPEED-NUT - CAGE TYPE (TIN)		4
-47	AN781-1	•NIPPLE -		2

FIGURE AND INDEX NUMBER	GROUP / MAJOR ASSEMBLY / PART NUMBER	INSTRUMENT EQUIPMENT / PILOT INSTRUMENT PANEL / 1234567 NOMENCLATURE	CODE	UNITS PER ASSY
140 -48	AN3157-2	•LIGHT ASSY - (GENERATOR OFF WARNING)	001-410	1
	10850-6	•CAP ASSY - ALUMINUM (MRO) (AS PER EO 05-5E-6A/83)	001-410	1
	AN3157-6	•LIGHT ASSY - (GENERATOR OFF WARNING)	411-	1
	AN3121-313	•LAMP -		1
-49	AN781-2	•NIPPLE - (LIGHT ASSY)		1
-50	SPEC 32539	•AMMETER - DIRECT-CURRENT (G•F•E•)		1
		OR		
	SPEC 32529A	•AMMETER - DIRECT-CURRENT (G•F•E•)		
		OR		
	MIL-A-5125(USAF)	•AMMETER - DIRECT-CURRENT (G•F•E•)		
		OR		
	MIL-A-5125(USAF)	•AMMETER - DIRECT-CURRENT 50 MILLIVOLT (WEI) (G•F•E•)		
	A-4613	•FIXTURE - (GMC) (INSTRUMENT LIGHTING)		1
	SK179BP6-16	•SCREW - PHILLIPS STANDARD TRUSS HEAD (AMS)		1
	SK179B6-16	•SCREW - PHILLIPS STANDARD TRUSS HEAD (AMS)		1
	AN507B632R20	•SCREW -		2
	AN507UB632R20	•SCREW -		1
	AN515B6R20	•SCREW -		1
	A6939-632-125	•SPEED-NUT - CAGE TYPE (TIN)		4
-51	AN781-1	•NIPPLE - (AMMETER)		2
-52	170-51110	•DECALCOMANIA - GEN OUTPUT WARNING LIGHT		1
-53	13B-52052-30	•PLATE - MTG (AS PER EO 05-5E-6A/273 & 274)		1
	AN507B6R7	•SCREW - (PLATE ATTACHING)		3
	AN365-1032	•NUT -		3
	151-54391	•GUARD - ELEC BOMB ROCKET TANK JETTISON SW (AS PER EO 05-5E-6A/273 & 274)		1
-54	176-54297-800	•BASE ASSY - (AS PER EO 05-5E-6A/273 & 274)		1
-55	176-54298	•PLATE - (AS PER EO 05-5E-6A/273 & 274)		1
	AN515-6R12	•SCREW - (PLATE ATTACHING)		3
	AN960D6	•WASHER -		3
	AN365-632	•NUT -		3
	MBH1731	•ACTUATOR - (MSC) (AUXILIARY)		1
-56	1HS-6	•SWITCH - HERMETICALLY SEALED (MSC)		1
	8C4-3	•COVER - SWITCH PROTECTOR (NAA)		1
	AN515-6R18	•SCREW - (SWITCH ATTACHING)		2
	AN365-632	•NUT -		2
-57	1617C2	•LIGHT ASSY - (WMC)		1
-58	RCAF REF 6A/1299	•INDICATOR - TURN & BANK (SPEC 21328) (G•F•E•) (AS PER EO 05-5E-6A/164)		1
-59	1D145-3	•DECALCOMANIA - POWER SOURCE (NAA)		1
	B-6602	•FIXTURE - (GMC) (INSTRUMENT LIGHTING) (AS PER EO 05-5E-6A/75)		1
	AN515B6R20	•SCREW -		1
	AN515UB6R20	•SCREW -		1
	AN507B6R20	•SCREW -		2
	A6939-632-125	•SPEED-NUT - CAGE TYPE (TIN)		4
-60	AN5825T5	•INDICATOR - RATE-OF-CLIMB (G•F•E•)		1
		OR		
	SPEC MIL-I-7721 (1)	•INDICATOR - RATE-OF-CLIMB (G•F•E•)		
		OR		
	731KN-02	•INDICATOR - (KOL) (RATE-OF-CLIMB)		
	B-4855	•FIXTURE - (GMC) (INSTRUMENT LIGHTING)		1
	AN507B632R20	•SCREW -		2
	SK179BP6-20	•SCREW - PHILLIPS STANDARD TRUSS HEAD (AMS)		1
	A6939-632-125	•SPEED-NUT - CAGE TYPE (TIN)		3
-61	AN823-4D	•ELBOW - (RATE-OF-CLIMB)		1
-62	MIL-I-5126A(USAF)(1)	•INDICATOR - GYRO COMPASS (G•F•E•)		1
	B-4789	•FIXTURE - (GMC) (INSTRUMENT LIGHTING)		1
	AN520UB10R28	•SCREW -		1
	AN520B10R28	•SCREW -		1
	SK179BP10-20	•SCREW - PHILLIPS STANDARD TRUSS HEAD (AMS)		2

FIGURE AND INDEX NUMBER	GROUP / MAJOR ASSEMBLY / PART NUMBER	INSTRUMENT EQUIPMENT / PILOT INSTRUMENT PANEL / 1234567 NOMENCLATURE	CODE	UNITS PER ASSY
140 -63	13A-51028	•ADAPTER PLATE - ARTIFICIAL HORIZON (AS PER EO 05-5E-6A/54)		1
-64	SK179BP10-10	•SCREW - PHILLIPS STANDARD TRUSS HEAD (AMS) (AS PER EO 05-5E-6A/54)		1
	SK179B10-10	•SCREW - PHILLIPS STANDARD TRUSS HEAD (AMS) (AS PER EO 05-5E-6A/54)		3
-65	64/90506	•PLATE - SWITCH (RCAF REF NO. 6A/1365) (G.F.E.)(AS PER EO 05-5E-6A/54)		1
	BZ-7RQ1T	•MICROSWITCH - HEAVY SPRING PLUNGER DOUBLE THROW LIMIT (RCAF REF NO. 5CB/557) (G.F.E.) (AS PER EO 05-5E-6A/54)		1
-66	64/30000	•INDICATOR - ARTIFICIAL HORIZON (G.F.E.) (RCAF REF NO. 6A/1282) (AS PER EO 05-5E-6A/54)		1
	SK179BP6-20	•SCREW - PHILLIPS STANDARD TRUSS HEAD (AMS) (AS PER EO 05-5E-6A/54)		3
	AN961-6	•WASHER -		1
	SK179B6-20	•SCREW - PHILLIPS STANDARD TRUSS HEAD (AMS) (AS PER EO 05-5E-6A/54)		1
	A6939-632-125	•SPEED-NUT - CAGE TYPE (TIN) (AS PER EO 05-5E-6A/54)		4
	B-4785	•FIXTURE - INSTRUMENT LIGHTING (G.F.E.) (AS PER EO 05-5E-6A/151)	001-490	1
	B-4785-1	•FIXTURE - (GMC) (INSTRUMENT LIGHTING) (AS PER EO 05-5E-6A-240)	491-	1
-67	EA-721-G-1	•INDICATOR - FUEL LEVEL (LIC) (WITH TYPE A2 CLAMP)		1
	A-5299-24	•FIXTURE - (GMC) (INSTRUMENT LIGHTING)		2
-68	151-53081	•DECALCOMANIA - PILOT CHECK LIST LOCATING		1
	AN515B10R20	•SCREW -		1
	AN507B6R12	•SCREW -		1
-69	SPEC MIL-I-5099A (1)	•INDICATOR - CABIN AIR-PRESSURE 1-7/8 INCH DIAL (G.F.E.)		1
-70	AN816-4D	•NIPPLE - (CABIN AIR-PRESSURE INDICATOR)		1
	191-51048	•SPACER - INSTRUMENT PANEL CABIN PRESSURE		1
	B-4850	•FIXTURE - (GMC) (INSTRUMENT LIGHTING)		1
	AN507B632R20	•SCREW -		2
	SK179BP6-20	•SCREW - PHILLIPS STANDARD TRUSS HEAD (AMS)		2
	A6939-632-125	•SPEED-NUT - CAGE TYPE (TIN)		4
-71	SPEC 27144	•TACHOMETER - 0-110 PERCENT RPM 3-1/4 INCH SIZE (G.F.E.)		1
		OR		
	30-51049	•TACHOMETER ASSY - (WITH TYPE E-34 TACH & 30-51047 & 30-51048 MOUNTINGS) (SPEC MIL-I-6470) (G.F.E.)		
		OR		
	1461FX-35-01	•TACHOMETER - (G.F.E.)		
		OR		
	MS28033-1	•TACHOMETER - 0-110 PERCENT 3-1/4 INCH SIZE (SPEC MIL-I-6470-A) (G.F.E.)		
		OR		
	SPEC MIL-I-25687	•TACHOMETER - 0-110 PERCENT RPM 3-1/4 INCH SIZE		
	B-4755	•FIXTURE - (GMC) (INSTRUMENT LIGHTING)		1
	AN507UB632R20	•SCREW -		1
	AN507B632R20	•SCREW -		1
	AN515B6R20	•SCREW -		2
	A6939-632-125	•SPEED-NUT - CAGE TYPE (TIN)		4
-72	13A-51024	•BRACKET ASSY - LIGHT & SW AUX FUEL FLOW	201-300	1
	13A-51024-10	•BRACKET ASSY - LIGHT & SW AUX FUEL FLOW	301-530	1
	13A-51024-20	•BRACKET ASSY - LIGHT & SW AUX FUEL FLOW	531-	1
	13A-51024-2	••BRACKET - LIGHT & SWITCH AUX FUEL FLOW	201-300	1
	13A-51024-4	••BRACKET - LIGHT & SWITCH AUX FUEL FLOW	301-	1
-73	AN3021-2	••SWITCH - ONE-HOLE MOUNTING SP TOGGLE	201-	1

FIGURE AND INDEX NUMBER	GROUP / MAJOR ASSEMBLY / PART NUMBER	INSTRUMENT EQUIPMENT / PILOT INSTRUMENT PANEL / 1234567 NOMENCLATURE	CODE	UNITS PER ASSY
140 -74	AN3157-6	••LIGHT ASSY - PRESS-TO-TEST INDICATOR	201-300	1
	10850-8	••CAP ASSY - ALUMINUM (MRO) (REPL RED CAP ON AN3157-6 AS PER EO 05-5E-6A/228)	201-300	1
	AN3157-6	••LIGHT ASSY - PRESS-TO-TEST INDICATOR	301-530	2
	10850-8	••CAP ASSY - ALUMINUM (MRO) (REPL RED CAP ON AN3157-6 AS PER EO 05-5E-6A/228)	301-530	2
	AN3157-8	••LIGHT ASSY - PRESS-TO-TEST INDICATOR	531-	2
	AN3121-313	••LAMP -	201-300	1
	AN3121-313	••LAMP -	301-	2
	AN507-632R8	•SCREW -	201-	3
	AN365-632	•NUT -	201-	3
	AN931-4-7	•GROMMET -	201-	1
-75	SPEC 27332	•INDICATOR - EXHAUST TEMPERATURE (G•F•E•)	001-370	1
	MIL-I-5892A	•INDICATOR - EXHAUST TEMPERATURE 0-1000 DEG C RANGE (G•F•E•)	371-	1
	TYPE A2	•CLAMP - MOUNTING (G•F•E•)	371-	1
	B-4760	•FIXTURE - (GMC) (INSTRUMENT LIGHTING)	001-370	1
	B-4755	•FIXTURE - (GMC) (INSTRUMENT LIGHTING)	371-610	1
	13B-51022	•LIGHT FIXTURE ASSY - EXHAUST TEMP IND	611-	1
	B-4855	••FIXTURE - (GMC) (INSTRUMENT LIGHTING)	611-	1
	13B-51022-2	••SPACER - LIGHT FIXTURE EXH TEMP INDICATOR	11-	1
	AN515B6R20	•SCREW -	001-370	2
	A6939-632-125	•SPEED-NUT - CAGE TYPE (TIN)	001-370	3
	NAS43DD1-8	•SPACER -	371-610	2
	AN507B632R20	•SCREW -		2
	AN507B8R15	•SCREW -	611-	1
	A6939-632-125	•SPEED-NUT - CAGE TYPE (TIN)		4
-76	MS28010-1	•INDICATOR - SYNC SINGLE 2-INCH SIZE MULTIPURPOSE 0-50 PSI PRESSURE (OIL SYS) (SPEC MIL-I-7085) (G•F•E•) (AS PER EO 05-5E-6A/135) OR		1
	25200A-15-A1-1A-1	•INDICATOR - OIL PRESSURE (G•F•E•)		
	191-51048	•SPACER - INSTRUMENT PANEL CABIN PRESSURE		4
	B-4850	•FIXTURE - (GMC) (INSTRUMENT LIGHTING)		1
-77	13A-51032	•BEZEL MOUNTING - 2-INCH SIZE INSTRUMENT (REWORK) (MAKE FROM AN5809-1) (G•F•E•) (EFF AIRCRAFT 23371 & SUBS)		1
	AN507B632R20	•SCREW -		2
	SK179BP6-20	•SCREW - PHILLIPS STANDARD TRUSS HEAD (AMS)		2
	A6939-632-125	•SPEED-NUT - CAGE TYPE (TIN)		4
-78	170-51112	•DECALCOMANIA - CTL/SURF POSN WARNING LIGHT		1
-79	AN3436-2-6	•TERMINAL BLOCK ASSY -		1
-80	AN3433-2-6	•BUS -		1
	AN515B4R6	•SCREW -		2
	AN365B440	•NUT -		2
	AN3434-1	•INSULATOR -		2
	AN961-6	•WASHER -		6
	AN936A6B	•LOCK-WASHER -		6
	AN341-6	•NUT -		6
-81	AN515B8R12	•SCREW -		2
	AN935B8	•LOCK-WASHER -		4
	AN961-8	•WASHER -		6
	AN341-8	•NUT -		4

-000-

FIGURE AND INDEX NUMBER	PART NUMBER	1234567 NOMENCLATURE	CODE	UNITS PER ASSY
		THIS PAGE DELETED		

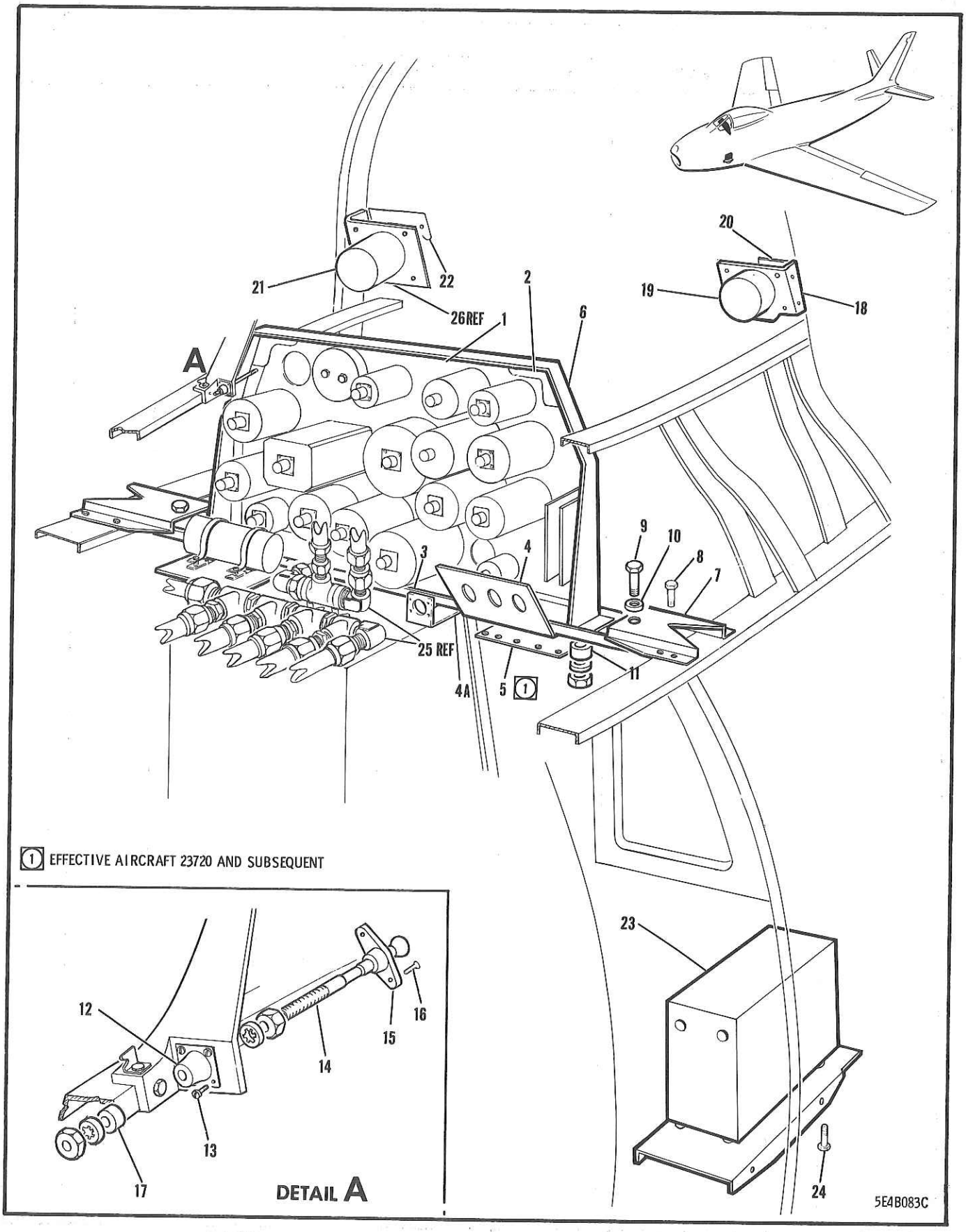

FIGURE 141 FORWARD FUSELAGE INSTRUMENT EQUIPMENT

FIGURE AND INDEX NUMBER	GROUP / MAJOR ASSEMBLY / PART NUMBER	1234567 NOMENCLATURE	CODE	UNITS PER ASSY
	GROUP	INSTRUMENT EQUIPMENT		
	MAJOR ASSEMBLY	FORWARD FUSELAGE INSTRUMENT EQUIPMENT		
	PART NUMBER	1234567 NOMENCLATURE		
141 -	13A-51031	INSTRUMENT EQUIPMENT INSTL - FORWARD FUSELAGE (SEE SECTION 3)		NP
- 1	13A-51005	•PANEL ASSY - PILOT INSTRUMENT COMPLETE (SEE FIG. 140)		REF
- 2	13A-51004	•SUPPORT ASSY - PILOT INSTRUMENT PANEL		1
- 3	13A-51004-15	••BEAM ASSY - PILOT INSTRUMENT PANEL		1
	13A-51004-5	•••BEAM - PILOT INSTRUMENT PANEL		1
	13A-51004-7	•••CLIP - INSTRUMENT PANEL SUPPORT		1
	13A-51004-11	•••MOUNT ASSY - INSTRUMENT PANEL SUPPORT		2
	6952-1L	••••MOUNT - MET-L-FLEX UNIT PLATE TYPE(RAI)		1
	13A-51004-9	••••SUPPORT - INSTRUMENT PANEL MOUNT		1
- 4	170-51116-7	•••BRACKET ASSY - INSTRUMENT PANEL ELECTRICAL DISCONNECT RECEPTACLE		1
- 4A	13B-52043	•BRACKET - VHF CONTROL MOUNTING (AS PER EO 05-5E-6A/273)		1
- 5	13B-51034	•••PLATE - INST PANEL DISC. SUPPORT (AS PER EO 05-5E-6A/232)	720-	1
	212-12	•••RECEPTACLE - PLAIN RIVET HOLE (CFC)		3
	170-53076	•••BRACKET ASSY - PILOT CHECK LIST RTNR		1
	AN507DD448-7	•••SCREW - (PILOT CHECK LIST RETAINER PANEL ATTACHING)		5
	4S3-4-6	•••SPACER - BOLT (NAA)		5
	AN960A4	•••WASHER -		5
	AN345DD4	•••NUT -		5
	13A-51004-13	••FRAME ASSY - INSTRUMENT PANEL		1
- 6	13A-51004-3	•••FRAME - INSTRUMENT PANEL		1
	212-12	•••RECEPTACLE - PLAIN RIVET HOLE (CFC)		5
	13B-51002	•••REINFORCING SUPPORT ASSY - PILOT INSTRUMENT PANEL	491-	1
	13A-51004-800	••CLIP - INSTRUMENT PANEL BOTTOM (MAKE FROM S-1168-357-020 (CAN))		2
	AN507DD448-7	••SCREW -		2
	AN526DD836-7	••SCREW -		2
		OR		
	AN505DD4-8	••SCREW -		8
	AN960A4	••WASHER -		8
	AN960A8	••WASHER -		2
	AN345DD4	••NUT -		2
		OR		
	AN340DD4	••NUT -		2
	AN345DD8	••NUT -		1
- 7	170-51024-1	•SUPPORT - INSTRUMENT PANEL LOWER MOUNTING (PORT SIDE)		1
	170-51024-2	•SUPPORT - INSTRUMENT PANEL LOWER MOUNTING (STARBOARD SIDE)		1
- 8	5B17C3A	•BOLT - CORROSION-RESISTANT 10-32 (NAA)		8
	AN363C1032	•NUT -		8
- 9	5B18C25A	•BOLT - CORROSION-RESISTANT 1/4-28 (NAA)		2
-10	4503-56	•CUSHION - (RAI)		2
	AN960C416	•WASHER -		2
-11	4S3-416-4	•SPACER - BOLT (NAA)		2
	AN363C428	•NUT -		2
-12	6952-K	•MOUNT - MET-L-FLEX UNIT PLATE TYPE (RAI)	001-200	2
		OR		
	6952-1	•MOUNT - MET-L-FLEX UNIT PLATE TYPE (RAI)	001-200	
	K114	•MOUNT - (RAI) (MET-L-FLEX UNIT)	201-	2
-13	AN503C8-10	•SCREW - (MOUNT ATTACHING)		6
	AN503C8-6	•SCREW - (MOUNT ATTACHING)		2
	AN960D8	•WASHER -	001-200	8
	AN363C832	•NUT -		8
-14	172-51026	•BOLT - INSTRUMENT PANEL STABILIZING	001-200	2
	5B150-29-12	•BOLT - PANEL (NAA)	201-	2

FIGURE AND INDEX NUMBER	GROUP INSTRUMENT EQUIPMENT MAJOR ASSEMBLY FORWARD FUSELAGE INSTRUMENT EQUIPMENT PART NUMBER	1234567 NOMENCLATURE	CODE	UNITS PER ASSY
141 -15	5B16	•RETAINER - BOLT (NAA)		2
-16	AN507B632R6	•SCREW - (RETAINER ATTACHING)		4
	AN365B632	•NUT -		4
-17	4S3-D416-8	•SPACER - BOLT (NAA)	001-200	2
	AN936A416	•WASHER -	001-200	4
	AN936A416	•WASHER -	201-	2
	AN341-416	•NUT -	001-200	4
	AN341-416	•NUT -	201-	2
-18	13B-51007	•BRACKET - PILOT STAND-BY COMPASS MOUNTING (PORT) (AS PER EO 05-5E-6A/65)		1
-19	AN5766-4C	•COMPASS - (G•F•E•)(AS PER EO 05-5E-6A/175)		1
-20	5P37-3	•NAME-PLATE - PILOT STAND-BY COMPASS (NAA)		1
	SK179BP6-14	•SCREW - PHILLIPS STANDARD TRUSS HEAD (AMS)		4
	A6939-632-375	•SPEED-NUT - CAGE TYPE (TIN)		4
-21	AN5743T1A	•CLOCK - (G•F•E•) (RELOCATED AS PER EO 05-5E-6A/65)	A5	1
	MIL-A-5885	•ACCELEROMETER - (G•F•E•)	G4	1
		OR		
	MS28025	•ACCELEROMETER - SPEC MIL-A-5885 (G•F•E•)	G4	
		OR		
	SPEC 27663	•ACCELEROMETER - (G•F•E•)	G4	
-22	B-4880	•FIXTURE - (GMC) (INSTRUMENT LIGHTING)		1
	AN507PB632R16	•SCREW -		1
	AN515PB6R16	•SCREW -		1
	A6939-632-062	•SPEED-NUT - CAGE TYPE (TIN)		2
	AN749-1-5	•JUMPER -		2
	SK179B6-7	•SCREW - PHILLIPS STANDARD TRUSS HEAD (AMS)		4
	AN365B632	•NUT -		4
-23	16501-1B	•AMPLIFIER - FUEL FLOW TOTALIZER (EPD)	001-210	1
		OR		
	16501-1C	•AMPLIFIER - FUEL FLOW TOTALIZER (EPD)	001-210	
-24	AN3-4	•BOLT - (AMPLIFIER ATTACHING)	001-210	2
-25	172-51085	BLOCK ASSY - AIRSPEED STATIC (SEE SECTION 9)		REF
-26	13B-51006	BRACKET - CLOCK MOUNTING (SEE SECTION 3)		REF
		(CONTINUED SEE FIG. 146)		

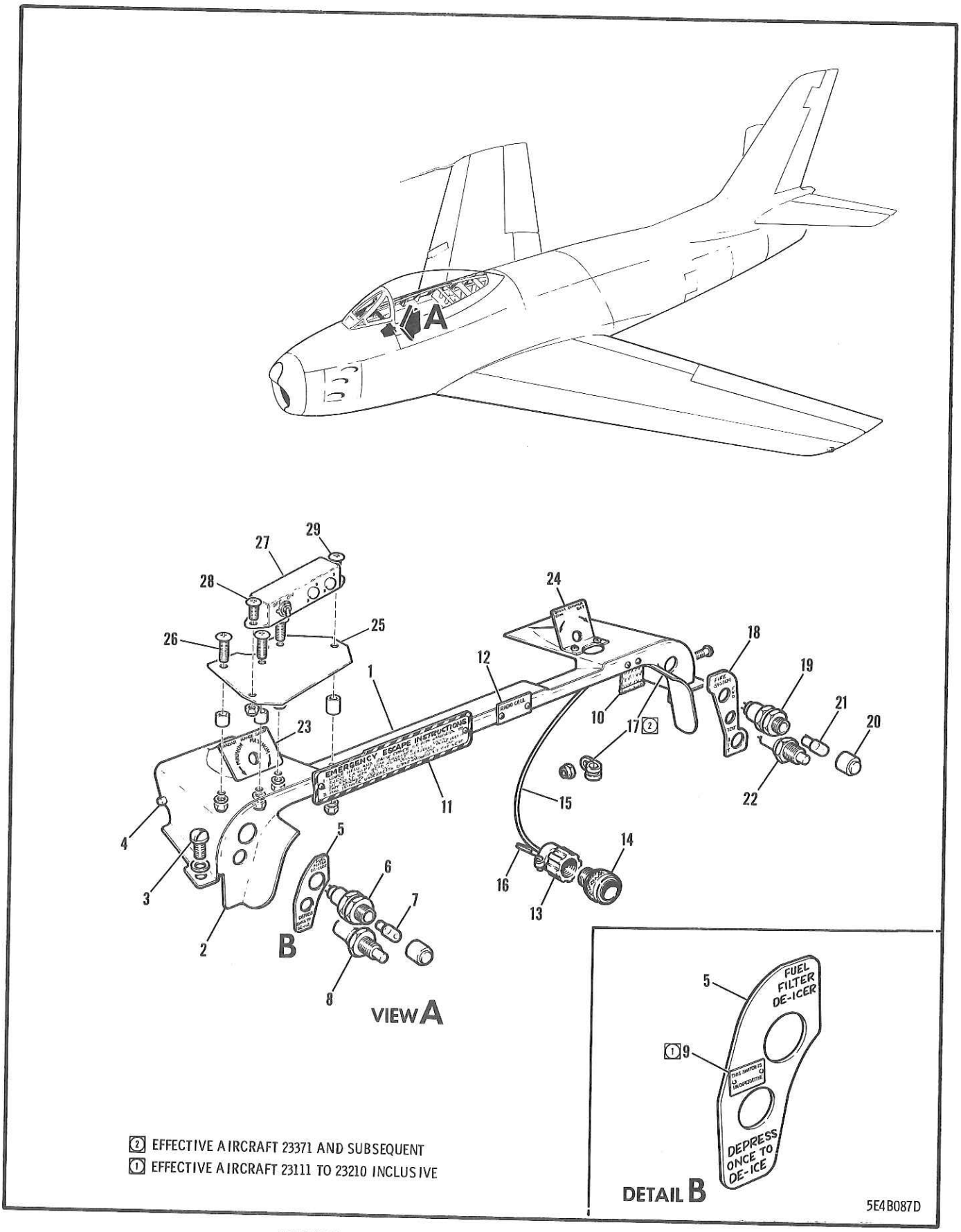

FIGURE 142 INSTRUMENT PANEL SHROUD

FIGURE AND INDEX NUMBER	GROUP / MAJOR ASSEMBLY / PART NUMBER	INSTRUMENT EQUIPMENT / INSTRUMENT PANEL SHROUD / 1234567 NOMENCLATURE	CODE	UNITS PER ASSY
142 -	172-31823-802	SHROUD ASSY - COCKPIT ENCL INSTRUMENT PANEL (SEE SECT. 3)(AS PER EO 05-5E-6A/65)	001-719	1
	172-31823-804	SHROUD ASSY - COCKPIT ENCL INSTRUMENT PANEL	720-	1
	13B-83010-803	.SHROUD ASSY - PILOT CKPT ENCL INST PANEL (AS PER EO 05-5E-6A/163)		1
- 1	13B-83010-821	..SHROUD - PILOT COCKPIT ENCL INST PANEL		1
- 2	13B-83010-4	..FORMER - PILOT CKPT ENCL INST PNL SHROUD		2
- 3	A5-35	..FASTENER - OVAL HEAD (DFC)		2
	GA5-312	..GROMMET - FASTENER (DFC)		2
- 4	NAS42DD5-16A	..SPACER -		1
- 5	170-54083	.NAME-PLATE - ELECTRICAL FUEL FILTER DE-ICER INDICATOR & SWITCH	001-210	1
- 6	AN3157-4	.LIGHT ASSY - PRESS-TO-TEST INDICATOR	001-210	1
- 7	AN3121-313	.LAMP -	001-210	1
- 8	C1006	.SWITCH - PUSH-BUTTON (HET) (DE-ICE)	001-210	1
- 9	13-50069	.PLACARD - LETTERING FOR INOPERATIVE SWITCH	111-210	1
-10	151-73323-3	.TAB - OXYGEN HOSE CLAMP		1
	AN515B8R8	.SCREW - (TAB TO SHROUD ATTACHING)		2
	AN960D8	.WASHER -		2
	AN365B832	.NUT -		2
-11	13B-83012	.PLATE - EMERGENCY ESCAPE INSTRUCTIONS (AS PER EO 05-5E-6B/10)		1
-12	5P36	.NAME-PLATE - RADIO CALL (NAA)		1
	COMMERCIAL	.SCREW - TYPE Z NO. 2 X 3/16-IN. (RADIO CALL PLATE ATTACHING)		2
-13	AN3057-12	.ADAPTER -		1
-14	AN3106B20-27P	.PLUG -		1
-15	1J1-2-2-4	.JUMPER - WIRE (NAA)		1
	AN515B8R8	.SCREW -		2
	AN365B832	.NUT -		2
-16	755-4-2-6	.CLIP - INTEGRALLY BONDED SUPPORT (ADE)		2
	AN515-8R6	.SCREW -		1
	AN365-832	.NUT -		1
	AN742D8C	.CLAMP -		1
-17	TA710-6	.CLAMP - ELECTRICAL HARNESS (TAI)	371-	1
	AN515-8R8	.SCREW -	371-	1
	AN365-832	.NUT -	371-	1
-18	13B-53015	.NAME-PLATE - ELECTRICAL FIRE DETECTION & WARNING IND (AS PER EO 05-6E-6A/65)		1
-19	AN3157-6	.LIGHT ASSY - PRESS-TO-TEST IND (REMOVE RED CAP FROM REAR FUS FIRE-WARNING LIGHT AS PER EO 05-5E-6A/216)		2
-20	10850-8	.CAP ASSY - ALUMINUM (MRO) (REPLACES RED CAP ON REAR FUSELAGE WARNING LIGHT AS PER EO 05-5E-6A/216)		1
-21	AN3121-313	.LAMP -		2
-22	138187	.SWITCH - SNAP (UCI) (FIRE-WARNING)		1
-23	170-74068	.NAME-PLATE - AN/APG30 RADAR POT. CONTROL		1
-24	172-74033	.NAME-PLATE - SIGHT DIMMER CONTROL		1
-25	13B-52045	.BRACKET - NIXIE LIGHT MOUNTING (AS PER EO 05-5E-6A/277)		1
-26	AN515-8R12	.SCREW - (BRACKET ATTACHING)		3
	NAS43DD3-13	.SPACER -		3
	AN960D8L	.WASHER -		3
	AN365-832	.NUT -		3
-27	10EA/58718	.NIXIE LIGHT ASSY - (G.S.M.) (AS PER EO 05-5E-6A/277)		1
-28	AN515-8R7	.SCREW - (LIGHT ATTACHING)		1
-29	AN515-8R16	.SCREW - (LIGHT ATTACHING)		1
	AN960D8L	.WASHER -		2
	AN365-832	.NUT -		

-000-

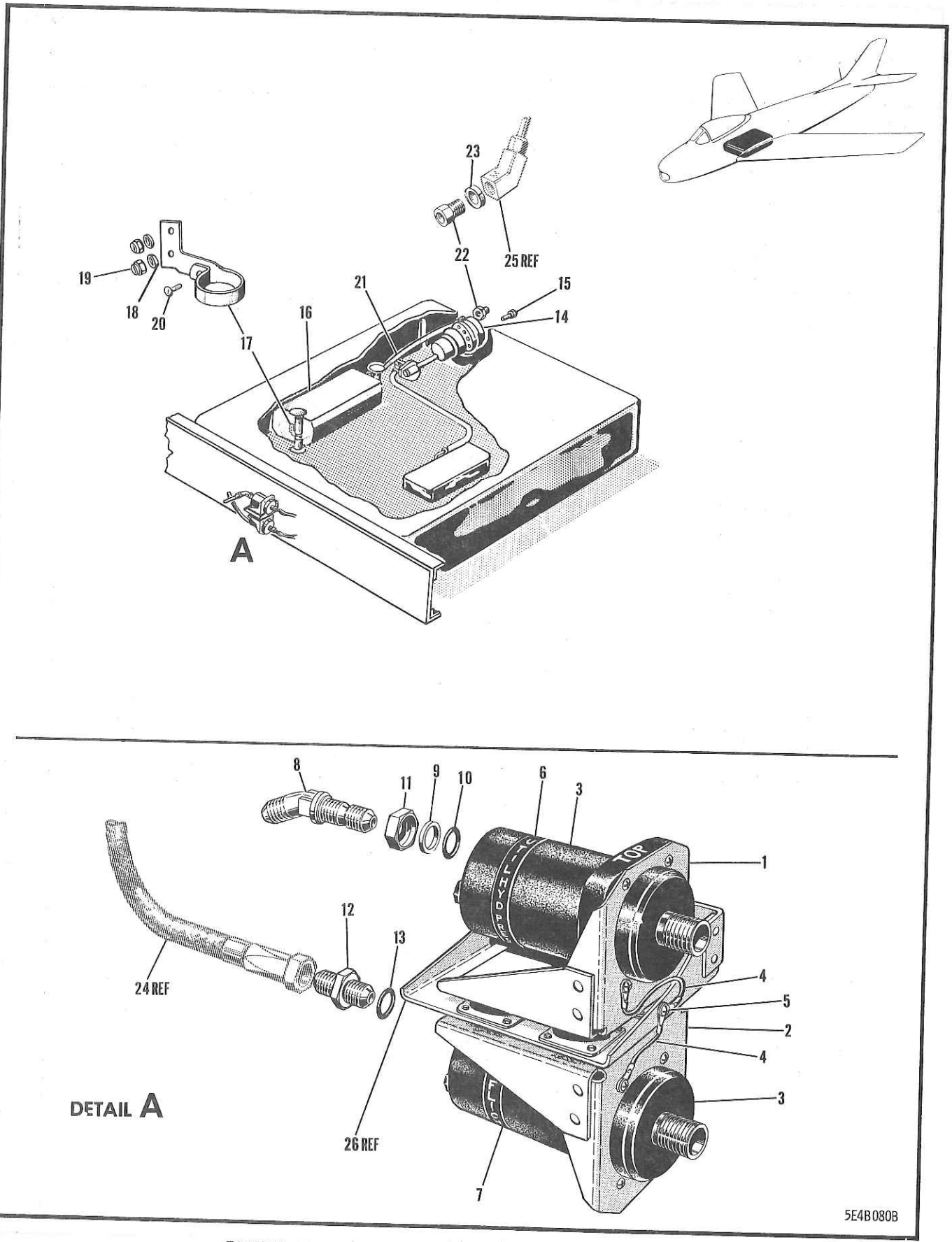

FIGURE 143 CENTRE WING INSTRUMENT EQUIPMENT

FIGURE AND INDEX NUMBER	GROUP INSTRUMENT EQUIPMENT MAJOR ASSEMBLY CENTRE WING INSTRUMENT EQUIPMENT PART NUMBER	1234567 NOMENCLATURE	CODE	UNITS PER ASSY
143 -	176-51013	INSTRUMENT EQUIP. INSTL - WING CTR SECTION (SEE SECTION 1)		NP
- 1	187-51054-3	•SUPPORT - NORMAL & UTILITY HYDRAULIC PRESSURE TRANSMITTER UPPER	001-675	1
- 2	187-51054	•SUPPORT - NORMAL & UTILITY HYDRAULIC PRESSURE TRANSMITTER LOWER	001-675	1
	187-51054-3	•SUPPORT - NORMAL & UTILITY HYDRAULIC PRESSURE TRANSMITTER	676-	2
	AN515-8R24	•SCREW - (SUPPORT TO BRACKET ATTACHING)		4
	AN365-832	•NUT -		4
- 3	SPEC 21323	•TRANSMITTER - HYDRAULIC PRESSURE (G.F.E.) OR		2
	MS28005-5	•TRANSMITTER - PRESSURE-SYNCHRONIZING STYLE 320-DEG MOVEMENT		
	AN515-6R6	•SCREW - (TRANSMITTER TO SUPPORT ATT)		8
- 4	AN749-2-4	•JUMPER -		2
- 5	AN515-6R6	•SCREW -		1
	AN365-632	•NUT -		1
- 6	191-51045-3	•DECALCOMANIA - UTILITY HYDRAULIC PRESSURE		1
- 7	191-51045-5	•DECALCOMANIA - NORMAL FLIGHT PRESSURE		1
- 8	AN837-4	•ELBOW - (UTILITY PRESS. XMTR TO HOSE ATT)		1
- 9	AN6290-4	•GASKET -		1
-10	AN6291-4	•RING -		1
-11	AN6289-4	•NUT -		1
-12	AN815-4	•UNION - (NORMAL FLIGHT PRESSURE TRANSMITTER TO HOSE)		1
-13	AN6290-4	•GASKET -		1
-14	170-51007	•TRANSMITTER ASSY - CENTRE WING FUEL LEVEL	001-370	1
	170-51007-800	•TRANSMITTER ASSY - CENTRE WING FUEL LEVEL	371-	1
	EA-379AC-547A	••TANK UNIT ASSY - TRANSMITTER (LIC)	001-370	1
	EA-379AC-547AM	••TANK UNIT ASSY - TRANSMITTER (LIC)	371-	1
	EA-1481	••GASKET - TANK UNIT HOUSING (LIC)	001-200	1
	EA-6555	••STOP - TANK UNIT FLOAT (LIC)		1
	EA-56594	••FLOAT - LAMINATED CORK (LIC)		1
	EA-17638-3	••GASKET - TANK UNIT HOUSING (LIC)		1
	EA-6548	••CABLE - TANK UNIT (LIC)		1
	AN3106-14S-5P	••PLUG -		1
	AN3054-6	••NUT -		1
	EA-1481	•GASKET - TANK UNIT HOUSING (LIC)	201-	1
-15	AN502-10-10	•SCREW - (TRANSMITTER ATTACHING)		10
-16	EA-909E2-A-1	•LIQUIDENSITOMETER - (LIC)		1
	170-51104-1	•SUPPORT ASSY - FUEL GAUGE LIQDMTR LH		1
-17	170-51104-2	•SUPPORT ASSY - FUEL GAUGE LIQDMTR RH		1
-18	AN936B416B	•WASHER -		4
-19	AN315C4R	•NUT -		4
-20	AN515-8R8	•SCREW - (SUPPORT ATTACHING)		2
-21	170-51105	•LEAD ASSY - DENSITOMETER TO FUEL CELL DOOR		1
	170-51105-3	••CABLE - TEFLON COAXIAL FUEL CELL LEAD		1
	412270C	••CONNECTOR - (MHR)		1
	412269F	••CONNECTOR - (MHR)		1
-22	412271E	•CONNECTOR - (MHR) (BULKHEAD)		1
-23	170-51106	•SEAL - CENTRE WING FUEL CELL XMTR ACC DOOR		1
-24	MS28741-4-0110	HOSE ASSY - DETACHABLE END FITTING (NORMAL FLIGHT CTL PRESSURE)(SEE SECTION 11)		REF
-25	412266F	CONNECTOR ASSY - (MHR) (ANGLE) (SEE SECTION 10)		REF
-26	191-51113-3	BRACKET ASSY - HYDRAULIC PRESSURE TRANSMITTER SUPPORT (SEE SECTION 1)		REF

-000-

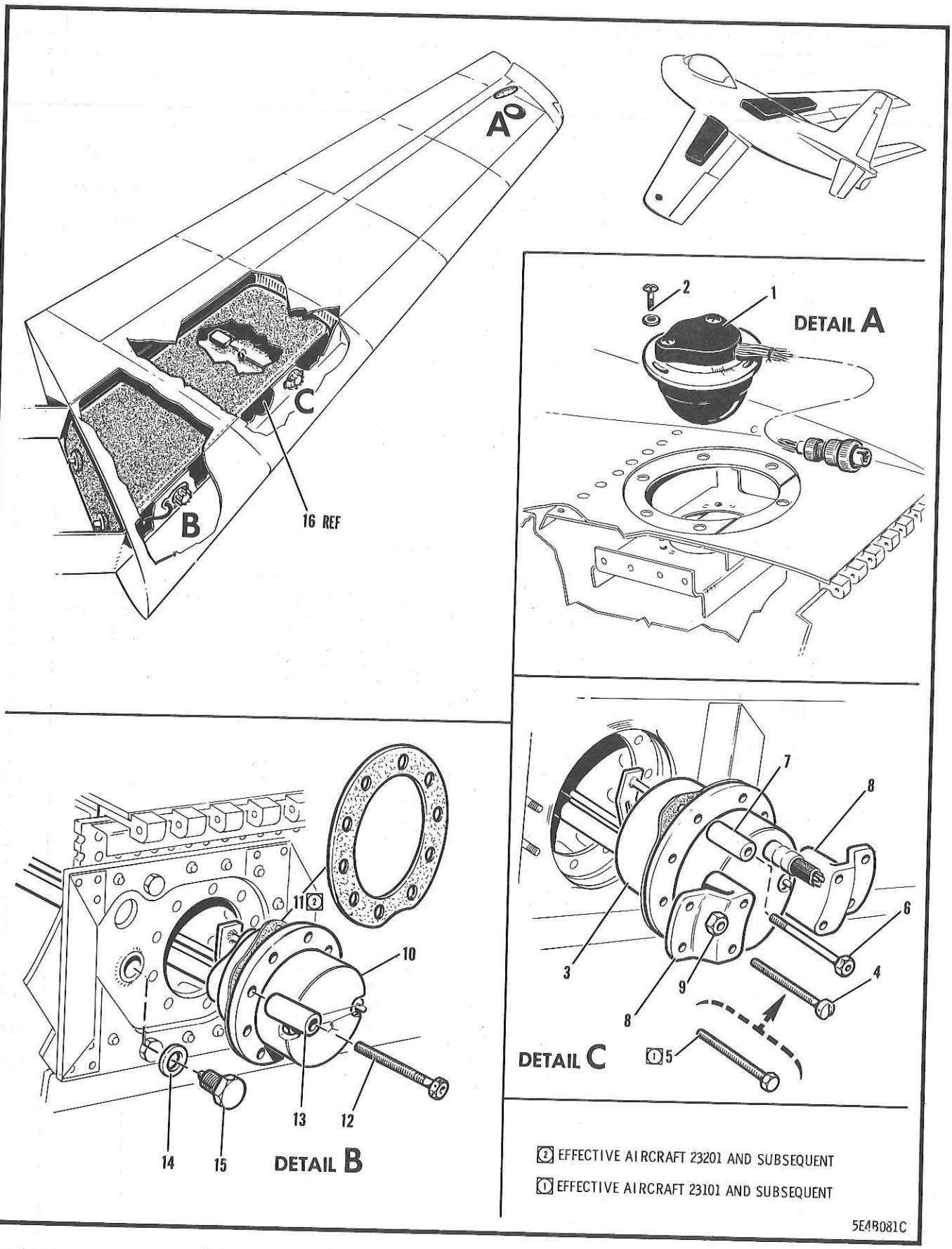

FIGURE 144 PORT OUTER WING INSTRUMENT EQUIPMENT

FIGURE AND INDEX NUMBER	GROUP INSTRUMENT EQUIPMENT MAJOR ASSEMBLY PORT OUTER WING INSTRUMENT EQUIPMENT PART NUMBER	1234567 NOMENCLATURE	CODE	UNITS PER ASSY
144 -	151-51014	INSTRUMENT EQUIPMENT INSTL - PORT WING (SEE SECTION 1)		NP
- 1	SPEC 27635	•TRANSMITTER - REMOTE COMPASS (G•F•E•)		1
		OR		
	656767	•COMPENSATOR - (SGC) (WITH 656520 OR 664543 FLUX VALVE)		
- 2	AN515B6R8	•SCREW - (TRANSMITTER ATTACHING)		3
	151-51008	•TRANSMITTER ASSY - O/W FUEL LEVEL OUTBOARD	001-370	1
	151-51008-800	•TRANSMITTER ASSY - O/W FUEL LEVEL OUTBOARD	371-	1
- 3	EA-378A-545	••TANK UNIT ASSY - TRANSMITTER (LIC)	001-370	1
	EA-378A-545M	••TANK UNIT ASSY - TRANSMITTER (LIC)	371-	1
- 4	AN502-416-26	•SCREW -	001-100	4
- 5	5B2-15DH	•BOLT - ADJUSTING 1-5/8 (NAA)	101-	4
- 6	AN74-12	•BOLT - (AS PER EO 05-5E-6A/28)		4
- 7	NAS43-4-44	•SPACER - (AS PER EO 05-5E-6A/28)		4
- 8	151-51062	•SUPPORT - WOP OUTBD FUEL LEVEL TRANSMITTER		2
- 9	AN365-1032	•NUT -		4
	151-51009	•TRANSMITTER ASSY - O/W FUEL LEVEL INBOARD	001-370	1
	151-51009-800	•TRANSMITTER ASSY - O/W FUEL LEVEL INBOARD	371-	1
-10	EA-378A-546	••TANK UNIT ASSY - TRANSMITTER (LIC)	001-370	1
	EA-378A-546M	••TANK UNIT ASSY - TRANSMITTER (LIC)	371-	1
-11	EA1480	•GASKET - TANK UNIT HOUSING (LIC)	201-	1
-12	AN73-12	•BOLT - (AS PER EO 05-5A-6A/28)		10
-13	NAS43-4-44	•SPACER - (AS PER EO 05-5E-6A/28)		10
-14	MS29512-3	•GASKET - FLARED TUBE FITTING		1
	151-51068	•PLUG ASSY - FUEL LEVEL TRANSMITTER ACCESS		1
-15	AN814-3	••PLUG & BLEEDER -		1
-16	151-48003-93	CELL - OUTER WING FUEL (SEE SECTION 12)		REF
		-000-		

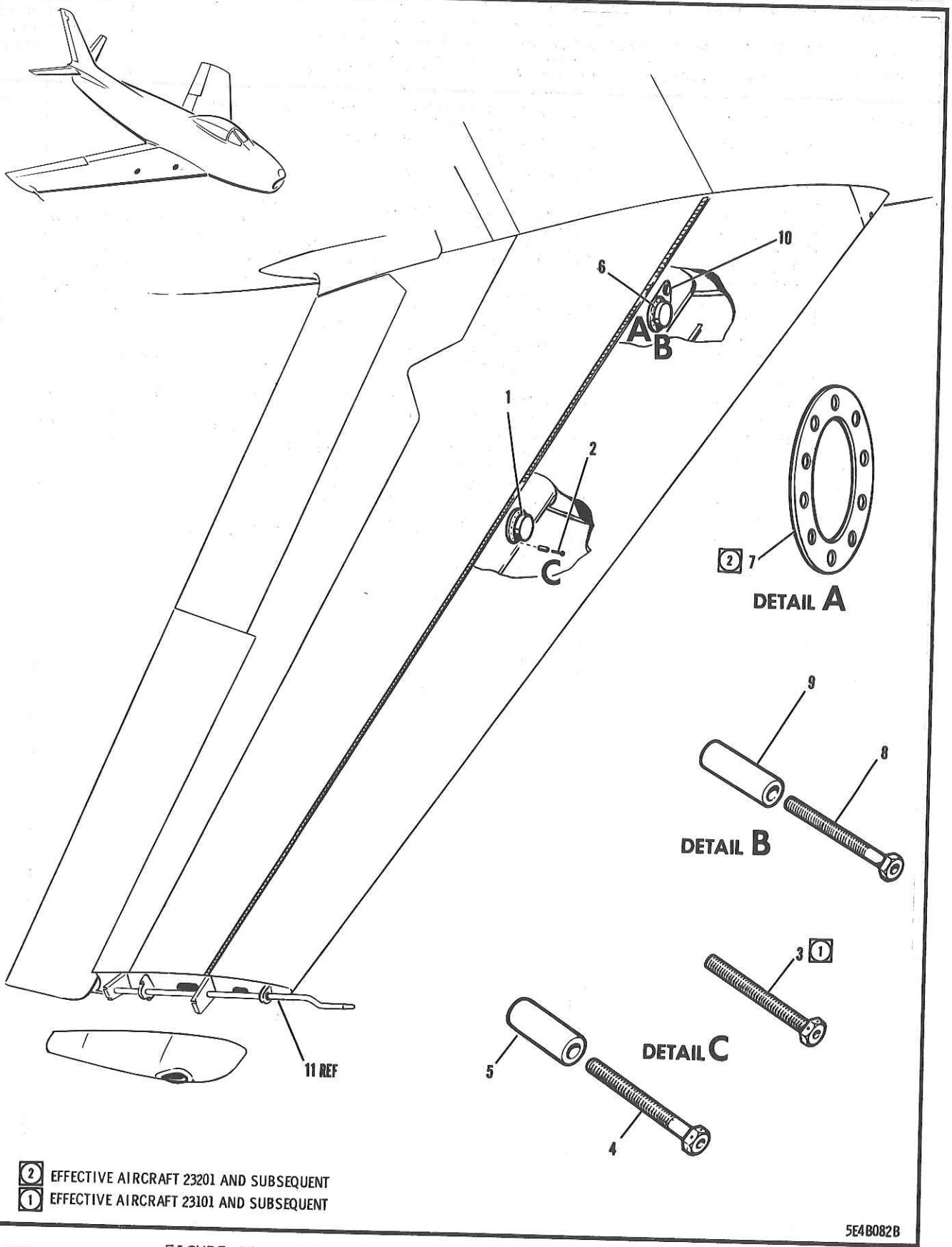

FIGURE 145 STARBOARD OUTER WING INSTRUMENT EQUIPMENT

FIGURE AND INDEX NUMBER	GROUP INSTRUMENT EQUIPMENT MAJOR ASSEMBLY STARBOARD OUTER WING INSTRUMENT EQUIPMENT PART NUMBER	1234567 NOMENCLATURE	CODE	UNITS PER ASSY
145 -	170-51114	INSTRUMENT EQUIPMENT INSTL - STARBOARD WING (SEE SECTION 1)		NP
	151-51008	•TRANSMITTER ASSY - O/W FUEL LEVEL OUTBOARD	001-370	1
	151-51008-800	•TRANSMITTER ASSY - O/W FUEL LEVEL OUTBOARD	371-	1
- 1	EA-378A-545	••TANK UNIT ASSY - TRANSMITTER (LIC)	001-370	1
	EA-378A-545M	••TANK UNIT ASSY - TRANSMITTER (LIC)	371-	1
- 2	AN502-416-26	•SCREW -	001-100	4
- 3	5B2-15DH	•BOLT - ADJUSTING 1-5/8 (NAA)	101-	4
- 4	AN74-12	•BOLT - (AS PER EO 05-5E-6A/28)		4
- 5	NAS43-4-44	•SPACER - (AS PER EO 05-5E-6A/28)		4
	151-51062	•SUPPORT - WOP OUTBD FUEL LEVEL TRANSMITTER		2
	AN365-1032	•NUT -		4
	151-51009	•TRANSMITTER ASSY - O/W FUEL LEVEL INBOARD	001-370	1
	151-51009-800	•TRANSMITTER ASSY - O/W FUEL LEVEL INBOARD	371-	1
- 6	EA-378A-546	••TANK UNIT ASSY - TRANSMITTER (LIC)	001-370	1
	EA-378A546M	••TANK UNIT ASSY - TRANSMITTER (LIC)	371-	1
- 7	EA-1480	•GASKET - TANK UNIT HOUSING (LIC)	201-	1
- 8	AN73-12	•BOLT - (AS PER EO 05-5E-6A/28)		10
- 9	NAS43-4-44	•SPACER - (AS PER EO 05-5E-6A/28)		10
-10	151-51068	•PLUG ASSY - FUEL LEVEL TRANSMITTER ACCESS		1
	AN814-3	••PLUG & BLEEDER -		1
	MS29512-3	•GASKET - FLARED TUBE UNIVERSAL FITTING		1
-11	165-51017	BOOM ASSY - AIRSPEED PITOT STATIC TUBE (SEE SECTION 9)		REF
		(CONTINUED SEE SECTION 9)		

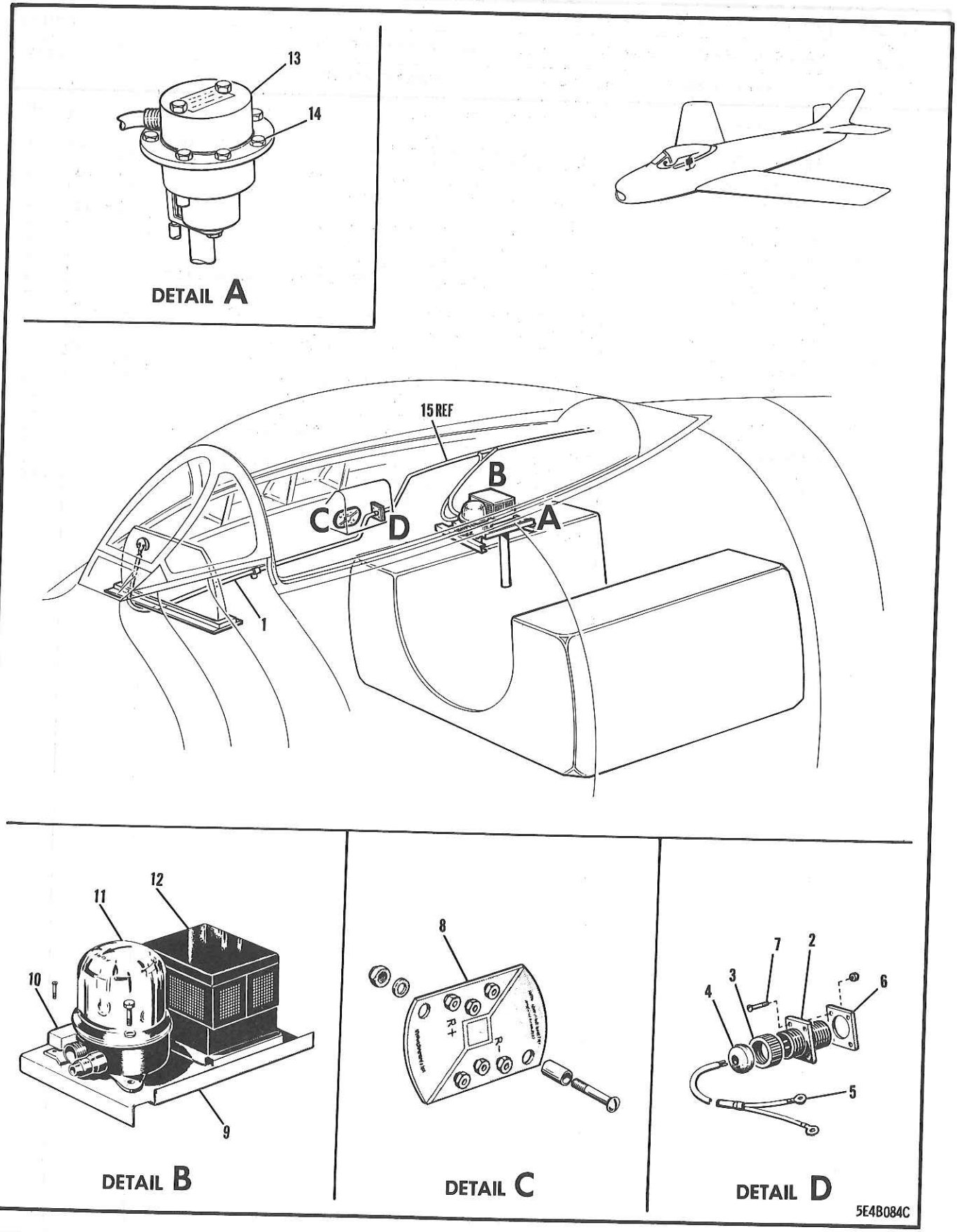

FIGURE 146 FUSELAGE STA 72-145 INSTRUMENT EQUIPMENT

FIGURE AND INDEX NUMBER	GROUP INSTRUMENT EQUIPMENT MAJOR ASSEMBLY FUSELAGE STA 72-145 INSTRUMENT EQUIPMENT PART NUMBER	1234567 NOMENCLATURE	CODE	UNITS PER ASSY
146 -	13A-51031	INSTRUMENT EQUIP. INSTL - FORWARD FUSELAGE (SEE FIG. 141)		REF
- 1	151-51045-30	.LEAD ASSY - EXHAUST TEMPERATURE THERMOC INSTRUMENT TO PRESSURE DISCONNECT		1
- 2	97-3100PR-16-412P	..RECEPTACLE - WALL (APC)		1
- 3	AN3054-8	..NUT -		1
- 4	AN931-7-11	..GROMMET -		1
- 5	AN5538-1	..TERMINAL -		1
	AN5538-2	..TERMINAL -		1
- 6	140-51028	.GASKET - THERMOCOUPLE DISCONNECT PLUG		4
- 7	AN515-4R6	.SCREW -		4
	AN365-440	.NUT -		1
- 8	AC-134A5-5A	.PANEL ASSY - STROKE ADJUSTING (LIC)		2
	AN520-10R18	.SCREW -		2
	4S3-10-16	.SPACER - BOLT (NAA)		2
	AN960D10	.WASHER -		2
	AN365-1032	.NUT -		1
- 9	151-51066-10	.SUPPORT ASSY - SLAVED GYRO COMPASS AMPL & THERMOCOUPLE RES		7
	AN515-8R8	.SCREW -		1
-10	AN5534-1	.RESISTOR -		2
	AN515-8R10	.SCREW - (RESISTOR TO SUPPORT ATTACHING)		1
-11	SPEC 21098	.GYRO - CONTROL (G.F.E.) (SLAVED COMPASS) OR		
	SPEC 21098B	.GYRO - CONTROL (G.F.E.) (SLAVED COMPASS) OR		
	MIL-C-6231	.GYRO - CONTROL (G.F.E.) (SLAVED COMPASS)		6
	AN960C416	.WASHER -		3
	AN4-6A	.BOLT -		1
-12	SPEC 21125	.AMPLIFIER - (GYROSYN COMPASS) (G.F.E.) OR		
	SPEC 21125A	.AMPLIFIER - (GYROSYN COMPASS) (G.F.E.)		
-13	170-51011	.TRANSMITTER ASSY - FORWARD FUS FUEL LEVEL	001-300	1
	EA-370C-1057	.TANK UNIT ASSY - TRANSMITTER (LIC)	301-370	1
	EA-370C-1057M	.TANK UNIT ASSY - TRANSMITTER (LIC)	371-	1
	EA-1479	.GASKET - TANK UNIT HOUSING (LIC)	201-	1
-14	AN74-5	.BOLT -		8
	AN966-416L	.WASHER -		8
-15	13A-51010	LEAD ASSY - EXHAUST TEMPERATURE THERMOC FUS STA 124-220 (SEE FIG. 147)		REF
		(CONTINUED SEE FIG. 147)		

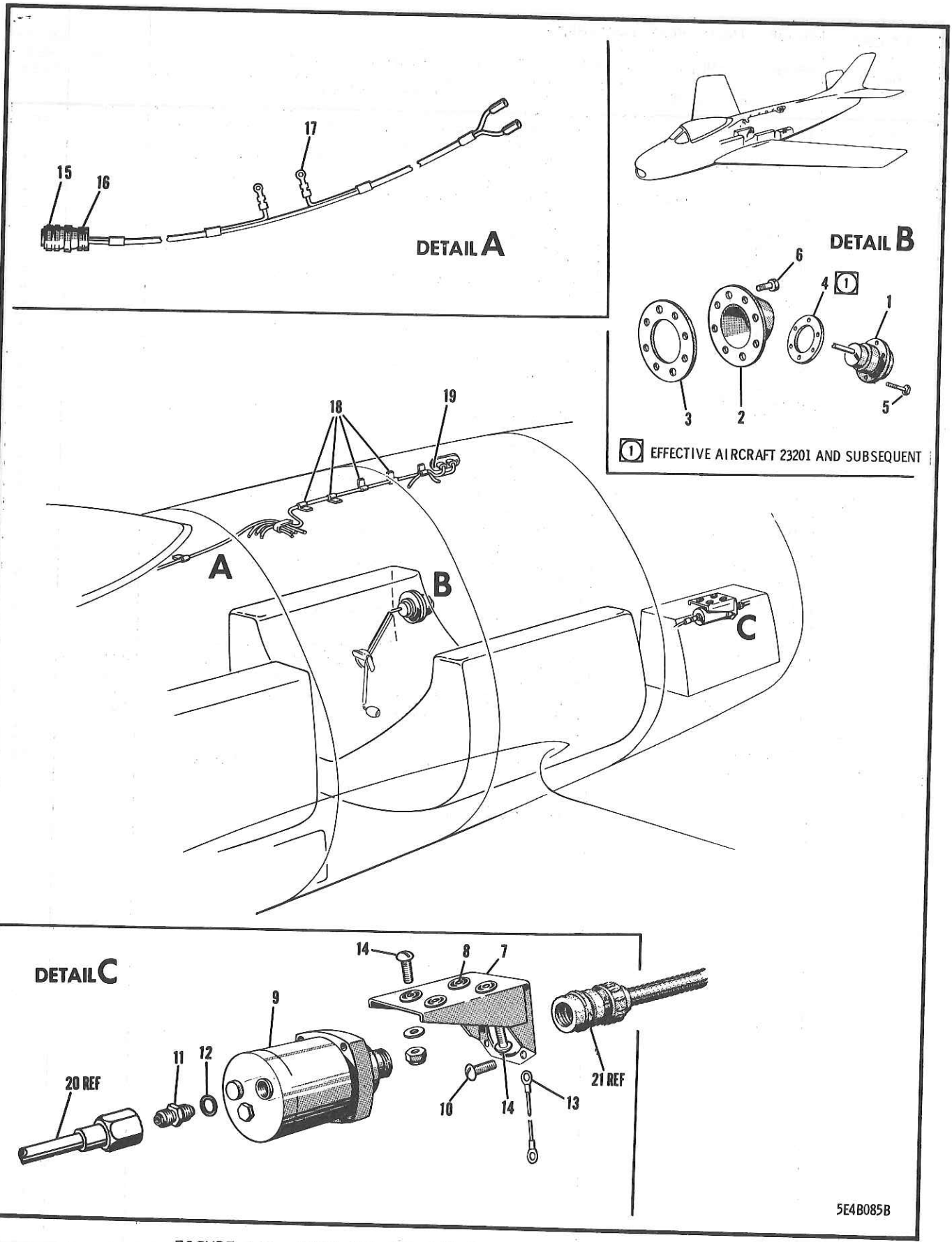

FIGURE 147 FUSELAGE STA 145-253 INSTRUMENT EQUIPMENT

FIGURE AND INDEX NUMBER	GROUP INSTRUMENT EQUIPMENT MAJOR ASSEMBLY FUSELAGE STA 145-253 INSTRUMENT EQUIPMENT PART NUMBER	1234567 NOMENCLATURE	CODE	UNITS PER ASSY
147 -	13A-51031	INSTRUMENT EQUIP. INSTL - FORWARD FUSELAGE (SEE FIG. 141)		REF
- 1	EA-881A-788A	•TANK UNIT ASSY - TRANSMITTER (LIC)	001-300	1
	EA-370A-1056	•TANK UNIT ASSY - TRANSMITTER (LIC)	301-370	1
	EA-370A-1056M	•TANK UNIT ASSY - TRANSMITTER (LIC)	371-	1
- 2	13-51012	•ADAPTER - REAR FUSELAGE FUEL CELL GAUGE		1
- 3	13-51013	•GASKET - REAR FUS FUEL CELL GAUGE ADAPTER		1
- 4	EA-1478	•GASKET - TANK UNIT HOUSING (LIC)	201-	1
- 5	AN3H4A	•BOLT - (TRANSMITTER TO ADAPTER ATT)		5
	AN960-10	•WASHER -		5
- 6	AN74-3	•BOLT - (ADAPTER TO TANK ATTACHING)		8
	AN960-416	•WASHER -		9
	13A-51017	•SUPPORT ASSY - EMERGENCY POWER CONTROL FUSELAGE HYDRAULIC PRESSURE XMTR		1
	13A-51015	••SUPPORT ASSY - HYDRAULIC PRESSURE XMTR		1
- 7	13A-51015-3	•••BRACKET - TRANSMITTER SUPPORT		1
- 8	809-2	•••MOUNT - MET-L-FLEX UNIT PLATE TYPE (RAI)		4
- 9	MS28005-5	••TRANSMITTER - 320-DEG MOVEMENT HYD PRESS. SYNCHRONIZER STYLE		1
		OR		
	SPEC 21323	••TRANSMITTER - HYDRAULIC PRESSURE (G.F.E.)		1
-10	AN515-6R6	••SCREW - (TRANSMITTER TO BRACKET ATT)		4
-11	AN815-4	••UNION -		1
-12	AN6290-4	••GASKET -		1
	191-51045-7	••DECALCOMANIA - ALTERNATE SURFACE PRESSURE		1
-13	AN749-2-4	••JUMPER -		1
-14	AN515-8R14	•SCREW - (BRACKET ATTACHING)		4
	AN8013D1	•WASHER -		4
	AN365-832	•NUT -		4
	13A-51010	•LEAD ASSY - EXHAUST TEMPERATURE THERMOC FROM FUS STA 124 TO 220 (35210 TYPE 2 CLASS A DUPLEX LEAD CHROMEL) (32510 TYPE 2 CLASS A DUPLEX LEAD CHROMEL ALUMEL)	001-100	1
	13A-51010-800	•LEAD ASSY - EXHAUST TEMPERATURE THERMOC FROM FUS STA 124 TO 220 (MIL-W5846A TYPE 3 CLASS A DUPLEX LEAD CHROMEL ALUMEL)	101-	1
-15	CE3106B-16-13S-F9	••PLUG - HIGH VOLTAGE CONNECTOR (CED)		1
-16	AN3057-8	••ADAPTER -		1
-17	AN5538-1	••TERMINAL -		2
-18	AN742D7C	•CLAMP -		4
	AN515-8R12	•SCREW -		2
	AN515-8R8	•SCREW -		2
	AN960D8	•WASHER -		4
	AN365-832	•NUT -		4
-19	AN515-6R10	•SCREW - (LEAD ATTACHING)		2
	AN960D6	•WASHER -		2
	AN365-632	•NUT -		2
-20	MS28741-4-0180	HOSE ASSY - MEDIUM PRESSURE DTCH END FTG (PUMP TO TRANSMITTER) (SEE SECT. 11)		REF
-21	AN3106B14S2S	PLUG - (PRESSURE XMTR) (SEE SECTION 10)		REF
		(CONTINUED SEE SECTION 9)		

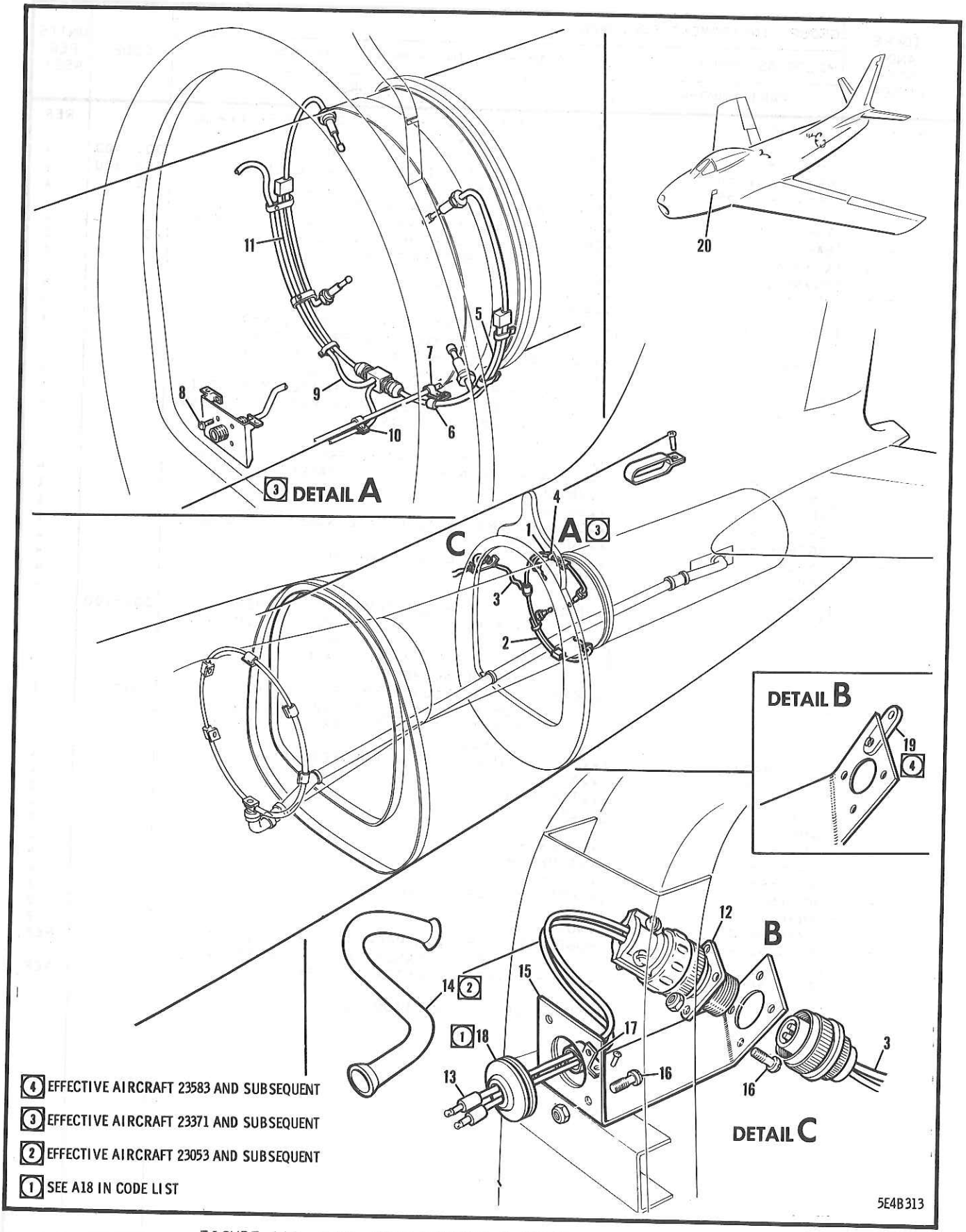

FIGURE 148 TAIL-PIPE HARNESS & INSTRUMENT EQUIPMENT

FIGURE AND INDEX NUMBER	GROUP INSTRUMENT EQUIPMENT MAJOR ASSEMBLY TAIL-PIPE HARNESS & INSTRUMENT EQUIPMENT PART NUMBER	1234567 NOMENCLATURE	CODE	UNITS PER ASSY
148 -	13A-51001	INSTRUMENT SYSTEM EQUIP. INSTL - COMPLETE (SEE FIG. 1)	001-582	NP
	13B-51005	INSTRUMENT SYSTEM EQUIP. INSTL - COMPLETE (SEE FIG. 1)	583-	NP
	13A-51013	.HARNESS INSTL - EXHAUST TEMP THERMOCOUPLE	001-370	NP
- 1	GE9892150G2	..HARNESS ASSY - (CGE)(EXHAUST TEMPERATURE)	001-370	1
- 2	GE9892150G1	..HARNESS ASSY - (CGE)(EXHAUST TEMPERATURE)	001-370	1
- 3	GE9890473G3	..LEAD - (CGE) (EXHAUST TEMP HARNESS)	001-201	1
	GE9894733	..LEAD - (CGE) (EXHAUST TEMP HARNESS)	202-370	1
- 4	AN526C1032-10	..SCREW -	001-370	2
	AN960C10	..WASHER -	001-370	2
	Z1200-02	..NUT - HEX LIGHT 1200-DEG F (ESN)	001-370	2
	13B-69012	.HARNESS INSTL - DUAL JET-PIPE TEMP LIMITER & INDICATOR SYSTEM (AS PER EO 05-5E-6B/8)	371-712	NP
	13B-69012-810	.HARNESS INSTL - DUAL JET-PIPE TEMP LIMITER & INDICATOR SYSTEM	713-	NP
- 5	13B-50500-2	..HARNESS - THERMOCOUPLE DUAL (PORT SIDE)	371-712	1
	13B-50500-6	..HARNESS - THERMOCOUPLE DUAL (PORT SIDE)	713-	1
- 6	AN742-6	..CLAMP -	371-	1
- 7	AT715SS4	..CLIP - (ESN) (SUPPLIED WITH 13B-50500-2 & -6)	371-	1
	AN3C4	..BOLT - (SUPPLIED WITH 13B-50500-2 & -6)	371-	1
	Z1200-02	..NUT - HEX LIGHT 1200-DEG F (ESN) (SUPPLIED WITH 13B-50500-2 & -6)	371-	4
- 8	AN500AC4-6	..SCREW -	371-	4
	AN960C4	..WASHER -	371-	4
	22ZM-40	..NUT - 550-DEG F HEXAGON (ESN)	371-	1
- 9	13B-50500-4	..LEAD - FLEXIBLE DUAL HARNESS	D7	4
-10	AN742-6	..CLAMP -	583-662	4
	X218-6	..CLAMP - (TFI)	371-	4
	AN742-5	..CLAMP -	D7	4
	AN520C10R10	..SCREW -	583-662	4
	AN520C10R8	..SCREW -	D7	4
	AN960C10L	..WASHER -	583-662	4
	AN960C10	..WASHER -	371-	4
	Z1200-02	..NUT - HEX LIGHT 1200-DEG F (ESN)	371-712	1
-11	13B-50500-3	..HARNESS - THERMOCOUPLE (STARBOARD SIDE)	713-	1
	13B-50500-7	..HARNESS - THERMOCOUPLE (STARBOARD SIDE)	001-052	1
	13A-51011	.LEAD ASSY - EXHAUST TEMP THERMOCOUPLE	053-	1
	13A-51011-800	.LEAD ASSY - EXHAUST TEMP THERMOCOUPLE		1
-12	GE9892806G1	..RECEPTACLE - (CGE) (EXHAUST TEMPERATURE)		1
-13	AN5537-4-1	..CONNECTOR ASSY -		1
	AN5537-4-2	..CONNECTOR ASSY -		1
-14	10C2E10-3	..CONDUIT - EXHAUST TEMPERATURE LEAD (NAA)	053-	1
	13A-51012-5	..MARKER - EXHAUST THERMOCOUPLE LEAD		2
-15	13A-51058	.BRACKET - THERMOCOUPLE LEAD DISCONNECTOR	001-052	1
	13A-51059	.BRACKET - THERMOCOUPLE LEAD DISCONNECTOR	053-	1
-16	AN515-4R7	.SCREW - (RECEPTACLE TO BRACKET ATT)	053-	8
	AN365-440	.NUT -		8
	10C2E9-3	.CONDUIT - THERMOCOUPLE LEAD (NAA)	A17	1
-17	795-7	.CLIP - SINGLE-HOLE MOUNTING LUG TYPE SUPPORT (ADE)	A17	1
	AN515-8R8	.SCREW -	A17	1
	2W17-8	.WASHER - (NAA)	A17	1
	AN935-8	.WASHER -	A17	1
	AN340-8	.NUT -	A17	1
-18	AN931A6-16	.GROMMET -	A18	1
-19	2L7-2	.LUG - SAFETY (NAA)	583-	1
-20	AN5823-1	.CARD -		1

-000-

SECTION 9

PITOT STATIC SYSTEM

TABLE OF CONTENTS

FIGURE	TITLE	PAGE
149	STARBOARD WING PITOT STATIC SYSTEM	676
150	FUSELAGE FORWARD PITOT STATIC SYSTEM	680
151	FUEL CONTROL PITOT STATIC SYSTEM	684

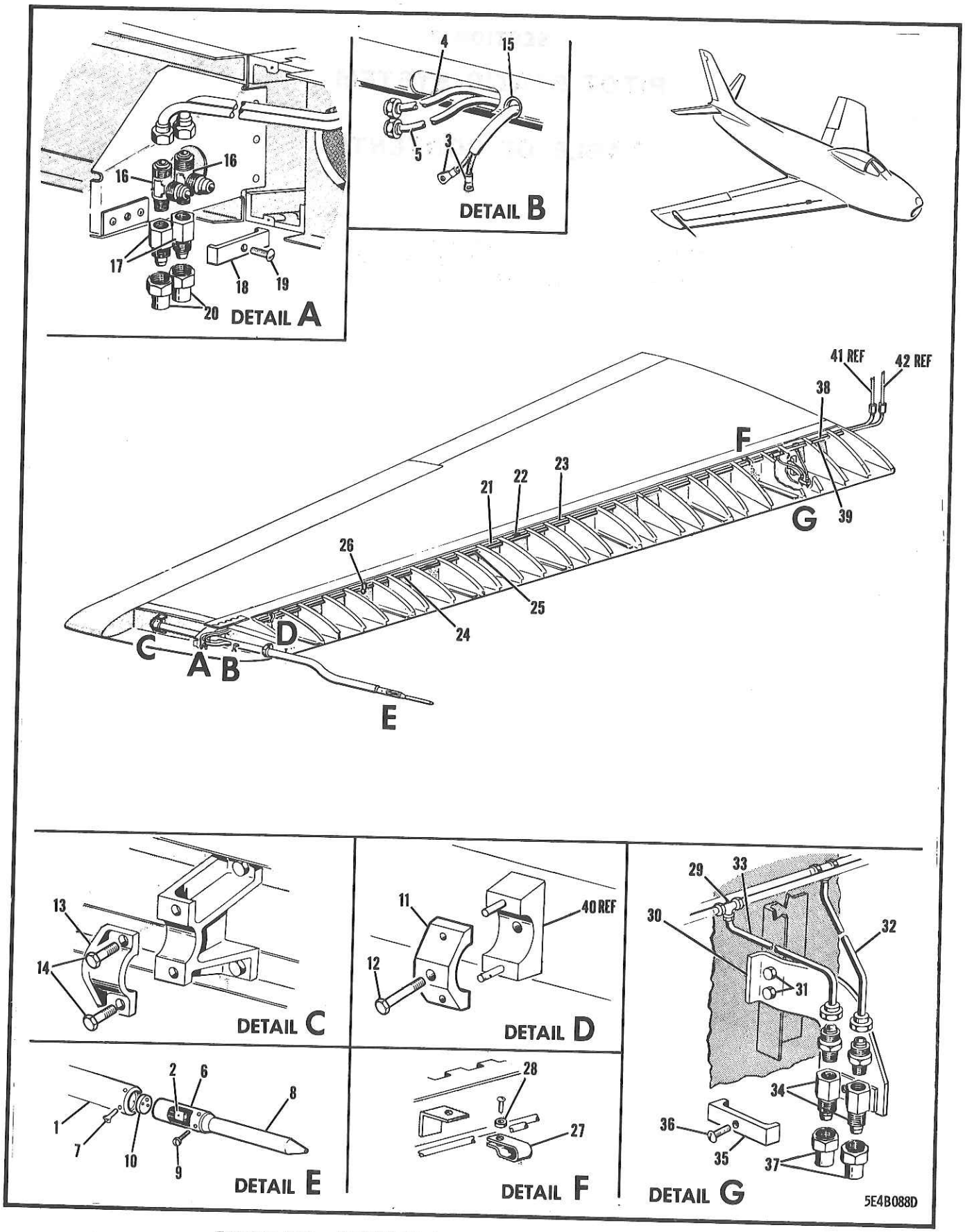

FIGURE 149 STARBOARD WING PITOT STATIC SYSTEM

FIGURE AND INDEX NUMBER	GROUP: PITOT STATIC SYSTEM MAJOR ASSEMBLY: STARBOARD WING PITOT STATIC SYSTEM PART NUMBER	1234567 NOMENCLATURE	CODE	UNITS PER ASSY
149 -	170-51114	INSTRUMENT EQUIPMENT INSTL - STARBOARD WING (SEE SECTION 8)		REF
- 1	165-51017	•BOOM ASSY - AIRSPEED PITOT STATIC TUBE	001-100	1
	165-51017-3	•BOOM ASSY - AIRSPEED PITOT STATIC TUBE	101-691	1
	165-51017-801	•BOOM ASSY - AIRSPEED PITOT STATIC TUBE	692-	1
	165-51017-803	•SPARE PART ASSY FOR 165-51017-3 & -801		1
	165-51092-13	••TUBE - AIRSPEED BOOM (AS PER EO 05-5E-6A/222)		1 2
	SPEC AN-JC48A	••WIRE - AIRSPEED PITOT STATIC (18 GA X 45 1/2 IN•)		1
	SPEC JAN1-631	••TUBE - (TYPE F GRADE B FORM U 43 IN• LG)		1
- 2	AN3115-1	••RECEPTACLE - (G•F•E•)	001-490	2
- 3	AN659-1	••TERMINAL -	491-	1
	AN659-1	••TERMINAL -	491-	1
	AN659-2	••TERMINAL -		1
- 4	165-51056-5	••LINE ASSY - AIRSPEED PITOT STATIC BOOM (PRESSURE)		1
- 5	165-51056-3	••LINE ASSY - AIRSPEED PITOT STATIC BOOM (STATIC)		1
- 6	165-51099	••SLEEVE ASSY - PITOT STATIC TUBE ATT		4
- 7	AN502A10-6	••SCREW - (SLEEVE TO BOOM ATTACHING) (AS PER EO 05-5E-6A/222)		1
- 8	AN5816-2	••TUBE - ELECTRICALLY HEATED PITOT (G•F•E•) (WITH AN520C-4 & AN935-6 4 REQ) OR		
	SPEC ANT-1	••TUBE - ELECTRICALLY HEATED PITOT TYPE D-1 (G•F•E•)		4
- 9	AN501A6-4	••SCREW - (AS PER EO 05-5E-6A/222)		1
-10	13B-50029	••GROMMET - PITOT TUBE (AS PER EO 05-5E-6A/222)		1
-11	165-51107-9	•FITTING - WOP AIRSPEED BOOM FORWARD ATT (SEE SECTION 1 FOR 165-51107-13)		1
-12	AN3-25A	•BOLT - (FITTING & BOOM ATTACHING)	001-200	1
-13	165-51108-5	•FITTING - WOP AIRSPEED BOOM REAR BEAM ATT (FOR UPPER CODE SEE SECTION 1) (ORDER 165-51108 FOR FUTURE PROC)		
-14	AN3-7A	•BOLT - (REAR FITTING & BOOM ATTACHING)	001-200	2
	AN365-1032	•NUT -	001-200	2
-15	AN931A6-10	•GROMMET -		1
-16	AN826-4D	•TEE -		2
-17	165-51109	•SUMP - AIRSPEED LINE DRAIN OUTBOARD		2
-18	165-51110	•CLAMP - AIRSPEED LINE SUMP		1
-19	AN520-10R20	•SCREW -		1
	AN365-1032	•NUT -		1
-20	AN929-4	•CAP -		2
-21	161-51801-954	•LINE ASSY - WING TIP DRAIN SUMP TO UNION STA 143 (STATIC)	001-610	1
	161-51801-985	•LINE ASSY - WING TIP DRAIN SUMP TO UNION STA 143 (STATIC)	611-	1
-22	AN815-4D	•UNION -		1
-23	161-51801-956	•LINE ASSY - UNION STA 143 TO TEE STA 59 (STATIC)	001-610	1

FIGURE AND INDEX NUMBER	GROUP PITOT STATIC SYSTEM MAJOR ASSEMBLY STARBOARD WING PITOT STATIC SYSTEM PART NUMBER	1234567 NOMENCLATURE	CODE	UNITS PER ASSY
149 -	161-51801-981	•LINE ASSY - UNION STA 143 TO TEE STA 59 (STATIC)	611-	1
-24	161-51801-950	•LINE ASSY - WING TIP DRAIN SUMP TO UNION STA 179 (PRESSURE)	001-610	1
	161-51801-983	•LINE ASSY - WING TIP DRAIN SUMP TO UNION STA 179 (PRESSURE)	611-	1
	AN815-4D	•UNION -		1
-25	161-51801-952	•LINE ASSY - UNION STA 179 TO TEE STA 49 (PRESSURE)	001-610	1
	161-51801-979	•LINE ASSY - UNION STA 179 TO TEE STA 49 (PRESSURE)	611-	1
-26	5C5	•CLAMP - TUBE (NAA) (STA 192 & 213)		2
	AN742D6	•CLAMP -		2
	AN515-8R6	•SCREW -		2
	AN365-832	•NUT -		2
-27	5C5	•CLAMP - TUBE (NAA)		2
	AN515-8R10	•SCREW -		2
-28	4S3D8-3	•SPACER - BOLT (NAA)		2
	AN365-832	•NUT -		1
-29	AN724-4D	•TEE -		2
-30	170-51103	•BRACKET ASSY - AIRSPEED LINE & DRAIN SUMP SUPPORT INBOARD		2
-31	AN3-4A	•BOLT -		1
	AN365-1032	•NUT -		2
-32	170-51801-41	•LINE ASSY - AIRSPEED WING INBOARD DRAIN SUMP TEE (STATIC)		2
-33	170-51801-39	•LINE ASSY - AIRSPEED WING INBOARD DRAIN SUMP TEE (PRESSURE)	001-610	1
	170-51801-987	•LINE ASSY - AIRSPEED WING INBOARD DRAIN SUMP TEE (PRESSURE)	611-	1
-34	165-51109	•SUMP - AIRSPEED LINE DRAIN OUTBOARD		1
	AN816-4D	•NIPPLE -		2
-35	165-51110	•CLAMP - AIRSPEED LINE SUMP		2
-36	AN520-10R20	•SCREW -		1
	AN365-1032	•NUT -		1
-37	AN929-4	•CAP -		1
-38	170-51801-57	•LINE ASSY - WING INBD DRAIN SUMP TO STARBOARD SIDE TEE (STATIC)		2
-39	161-51801-53	•LINE ASSY - WING INBOARD DRAIN TO STARBOARD SIDE UNION (PRESSURE)		1
-40	165-51107-21	CLAMP ASSY - WOP AIRSPEED BOOM FORWARD ATT STARBOARD SIDE (SEE SECTION 1)		1
-41	170-51801-59	LINE ASSY - WING INBOARD DRAIN SUMP TO STBD SIDE TEE (STATIC) (SEE FIG.150)		REF
-42	170-51801-33	LINE ASSY - WING INBOARD DRAIN SUMP TO STBD SIDE TEE (PRESSURE) (SEE FIG. 150)		REF
		-000-		REF

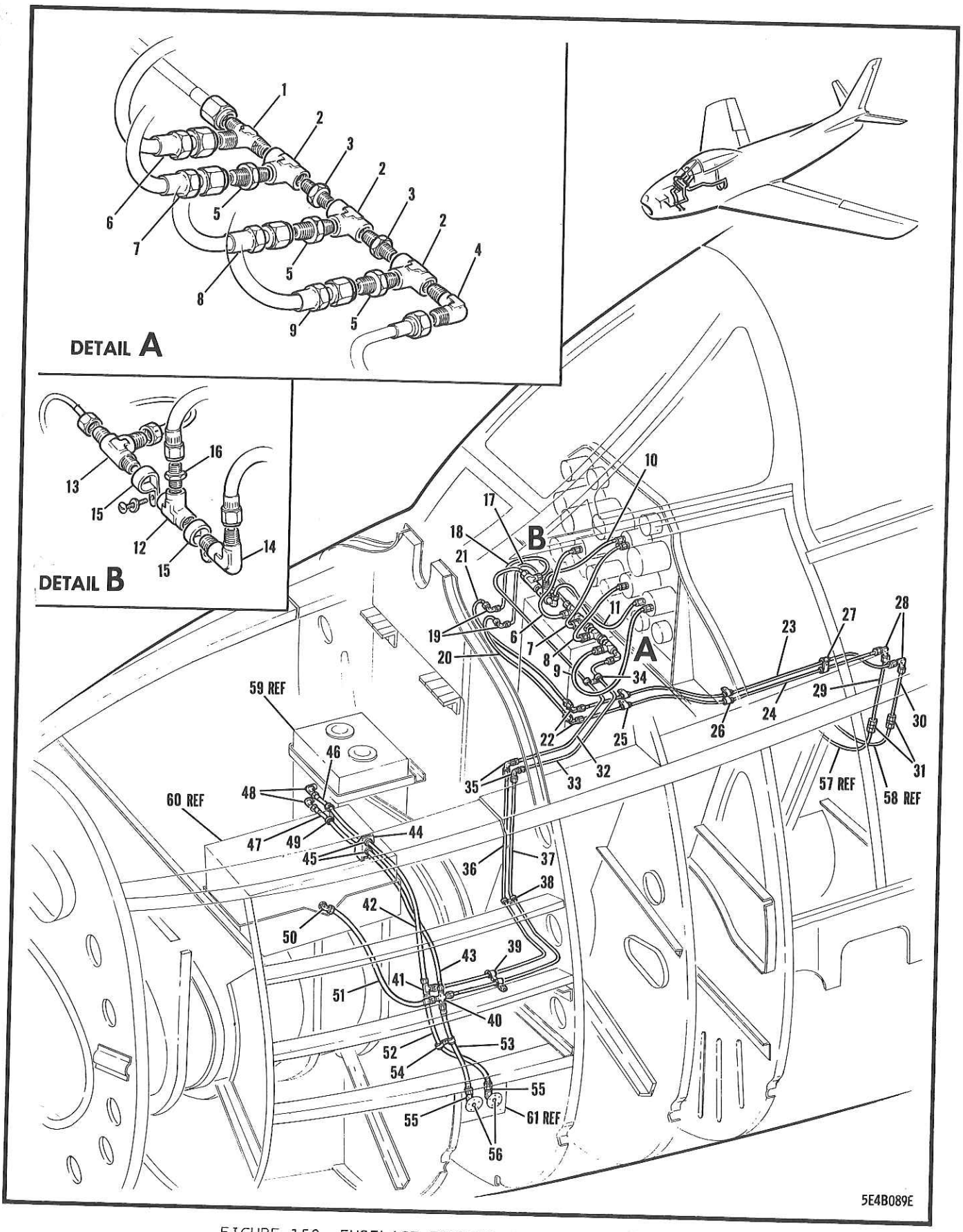

FIGURE 150 FUSELAGE FORWARD PITOT STATIC SYSTEM

FIGURE AND INDEX NUMBER	GROUP PITOT STATIC SYSTEM MAJOR ASSEMBLY FORWARD FUSELAGE PITOT STATIC SYSTEM PART NUMBER	1234567 NOMENCLATURE	CODE	UNITS PER ASSY
150 -	13A-51031	INSTRUMENT EQUIP. INSTL - FORWARD FUSELAGE (SEE SECTION 8)		REF
	172-51085	•BLOCK ASSY - AIRSPEED STATIC DISCONNECT		1
- 1	AN826-4D	••TEE -		1
- 2	AN917-1D	••TEE -		3
- 3	AN911-1D	••NIPPLE -		2
- 4	AN822-4D	••ELBOW -		1
- 5	AN816-4D	••NIPPLE -		3
- 6	AN6270-4-16	••HOSE ASSY - DETACHABLE SWIVEL FITTING LOW PRESSURE (RATE-OF-CLIB)		1
- 7	AN6270-4-18	••HOSE ASSY - DETACHABLE SWIVEL FITTING LOW PRESSURE (AIRSPEED)		1
- 8	AN6270-4-16	••HOSE ASSY - DETACHABLE SWIVEL FITTING LOW PRESSURE (ALTIMETER)		1
- 9	AN6270-4-16	••HOSE ASSY - DETACHABLE SWIVEL FITTING LOW PRESSURE (MACHMETER)		1
	795-9	•CLIP - SINGLE-HOLE MTG LUG TYPE SUP. (ADE) (AIRSPEED STATIC BLOCK ATTACHING)		1
	795-9R	•CLIP - SINGLE-HOLE MTG LUG TYPE SUP. (ADE) (AIRSPEED STATIC BLOCK ATTACHING)		2
	SK179B8-7	•SCREW - PHILLIPS STANDARD TRUSS HEAD (AMS)		2
	AN365B832	•NUT -		1
-10	AN6270-4-22	•HOSE ASSY - DETACHABLE SWL FTG LOW PRESS.		1
-11	AN6270-4-24	•HOSE ASSY - DETACHABLE SWL FTG LOW PRESS.		1
-12	AN917-4D	•TEE -		1
-13	AN826-4D	•TEE -		1
-14	MS20822-4D	•ELBOW - FLARED TUBE & PIPE THD 90-DEG		2
-15	2C17-9H	•CLAMP - LOOP TYPE TUBE (NAA)		2
	AN515-8R8	•SCREW -		2
	2W1-12-14-64	•WASHER - PLAIN (NAA)		1
-16	AN816-4D	•NIPPLE -		1
-17	170-51801-983	•LINE ASSY - STATIC DISTRIBUTION BLOCK TO PRESSURE WEB ELBOW RH (AS PER EO 05-5E-6A/76)		1
	AN742D6C	•CLAMP -		2
	AN520-10R8	•SCREW -		1
	AN365-1032	•NUT -		1
-18	170-51801-61	•LINE ASSY - PRESSURE DISTRIBUTION BLOCK TO PRESSURE WEB ELBOW RH		1
	5C5	•CLAMP - TUBE (NAA)		1
	AN515-8R8	•SCREW -		1
	AN365B832	•NUT -		2
-19	AN833-4D	•ELBOW -		2
	AN960D716	•WASHER -	001-100	2
	2W1L28-24-62	•WASHER - PLAIN (NAA)		2
	AN924-4D	•NUT -		1
-20	161-51801-962	•LINE ASSY - ELBOW TO RH PRESSURE WEB ELL. (STATIC) (AS PER EO 05-5E-6A/76)		1
-21	161-51801-955	•LINE ASSY - ELBOW TO RH PRESSURE WEB ELBOW (PRESSURE)		2
-22	AN833-4D	•ELBOW -		2
	AN960D716	•WASHER -	001-100	2
	2W1V-28-26-625	•WASHER - PLAIN (NAA)	101-	2
	2W1L28-24-62	•WASHER - PLAIN (NAA)		2
	AN924-4D	•NUT -		1
-23	161-51801-951	•LINE ASSY - ELBOW RH TO RH PRESSURE WEB ELBOW (PRESSURE)		1
-24	170-51801-55	•LINE ASSY - ELBOW RH TO RH PRESSURE WEB ELBOW (STATIC)		2
-25	AN742D6C	•CLAMP -		

FIGURE AND INDEX NUMBER	GROUP PITOT STATIC SYSTEM MAJOR ASSEMBLY FORWARD FUSELAGE PITOT STATIC SYSTEM PART NUMBER	1234567 NOMENCLATURE	CODE	UNITS PER ASSY
150 -	NAS43DD-3-80	•SPACER -		1
	AN520-10R30	•SCREW -		1
	AN520-10R12	•SCREW -		1
	AN365-1032	•NUT -		2
-26	AN742D6C	•CLAMP -		2
	NAS43DD-3-20	•SPACER -		1
	AN520-10R8	•SCREW -		1
	AN365-1032	•NUT -		1
-27	AN742D6C	•CLAMP -		2
	AN520-10R8	•SCREW -		1
	AN365-1032	•NUT -		1
-28	AN833-4D	•ELBOW -		2
	AN960D716	•WASHER -		2
	AN924-4D	•NUT -		2
-29	170-51801-59	•LINE ASSY - WING INBOARD DRAIN SUMP TO RH TEE (STATIC)		1
-30	170-51801-33	•LINE ASSY - WING INBOARD DRAIN SUMP TO RH TEE (PRESSURE)		1
-31	AN815-4D	•UNION -		2
-32	161-51801-67	•LINE ASSY - PRESSURE DISTRIBUTION BLOCK TO BULKHEAD ELBOW LH		1
	2C33-3	•CLIP - (NAA)		1
	AN742D6C	•CLAMP -		1
	AN515-8R8	•SCREW -		1
	AN365-832	•NUT -		1
-33	170-51801-67	•LINE ASSY - AIRSPEED STA 54 TEE TO STATIC DISTRIBUTION BLOCK		1
-34	5C5	•CLAMP - TUBE (NAA)		1
	NAS202-832-B6	•SCREW -		1
	AN365B832	•NUT -		1
-35	AN833-4D	•ELBOW -		2
	AN960D716	•WASHER -		2
	2W1L28-24-62	•WASHER - PLAIN (NAA)		2
	AN924-4D	•NUT -		2
-36	170-51801-65	•LINE ASSY - AIRSPEED DRAIN SUMP TO STA 53 ELBOW (PRESSURE)		1
-37	170-51801-63	•LINE ASSY - AIRSPEED DRAIN SUMP TO STA 53 ELBOW (STATIC)		1
-38	AN742D6C	•CLAMP -		2
	AN515-8R8	•SCREW -		1
	AN365-832	•NUT -		1
-39	AN742D6C	•CLAMP -		2
	4S3-D10-10	•SPACER - BOLT (NAA)		1
	4S3-D10-24	•SPACER - BOLT (NAA)		1
	AN3-15A	•BOLT -		1
	AN365-1032	•NUT -		1
-40	AN827-4D	•CROSS -		1
-41	AN824-4D	•TEE -		1
-42	170-51801-961	•LINE ASSY - AIRSPEED COMPUTER HOSE TO AIRSPEED DRAIN SUMP (CROSS) (STATIC)		1
-43	170-51801-963	•LINE ASSY - AIRSPEED COMPUTER HOSE TO AIRSPEED DRAIN SUMP (TEE) (PRESSURE)		1
-44	170-51102	•SUPPORT - COMPUTER AIRSPEED PRESSURE & STATIC LINE		1
	AN520-10R8	•SCREW - (SUPPORT ATTACHING)		2
	AN365-1032	•NUT -		2
-45	AN832-4D	•UNION -		2
	AN960D716	•WASHER -		2
	AN924-4D	•NUT -		2
-46	AN6270-4-6-1/2	•HOSE ASSY - DETACHABLE SWL FTG LOW PRESS.	001-100	1

FIGURE AND INDEX NUMBER	GROUP PITOT STATIC SYSTEM MAJOR ASSEMBLY FORWARD FUSELAGE PITOT STATIC SYSTEM PART NUMBER	1234567 NOMENCLATURE	CODE	UNITS PER ASSY
150 -	AN6270-4-13	•HOSE ASSY - DETACHABLE SWL FTG LOW PRESS.	101-	1
	10C2B8-10	•CONDUIT - (NAA)	101-	1
-47	AN6270-4-5-3/4	•HOSE ASSY - DETACHABLE SWL FTG LOW PRESS.	001-100	1
	AN6270-4-13	•HOSE ASSY - DETACHABLE SWL FTG LOW PRESS.	101-	1
	10C2B8-10	•CONDUIT - (NAA)	101-	1
-48	MS20822-4D	•ELBOW - FLARED TUBE & PIPE THD 90-DEG		2
-49	AN742D10C	•CLAMP -		2
	AN515-8R7	•SCREW -		1
	AN365-832	•NUT -		1
-50	MS20822-4D	•ELBOW - FLARED TUBE & PIPE THD 90-DEG		1
-51	AN6270-4-19-1/2	•HOSE ASSY - DETACHABLE SWL FTG LOW PRESS.		1
-52	AN6270-4-13-1/2	•HOSE ASSY - DETACHABLE SWL FTG LOW PRESS. (PRESSURE) (AS PER EO 05-5E-6A/25)		1
-53	AN6270-4-15	•HOSE ASSY - DETACHABLE SWL FTG LOW PRESS. (STATIC) (AS PER EO 05-5E-6A/25)		2
-54	AN742D6C	•CLAMP -		1
	AN515-8R10	•SCREW -		1
	AN365-832	•NUT -	001-642	2
-55	AN822-4D	•ELBOW -	643-	2
	AN822-4	•ELBOW -		2
-56	AN932-2	•PLUG -		REF
-57	170-51801-57	LINE ASSY - WING INBD DRAIN SUMP TO RH TEE (STATIC) (SEE FIG. 149)		REF
-58	161-51801-53	LINE ASSY - WING INBD DRAIN SUMP TO RH ELBOW (PRESSURE) (SEE FIG. 149)		REF
-59	667494	COMPUTER - TYPE A4 GUNSIGHT (G.F.E.) (SEE SECTION 19)		REF
-60	667502	AMPLIFIER - TYPE A4 GUNSIGHT (G.F.E.) (SEE SECTION 19)		REF
-61	3F2-4	FITTING - BULKHEAD UNION (NAA) (SEE SECTION 3)		
		(CONTINUED SEE FIG. 151)		

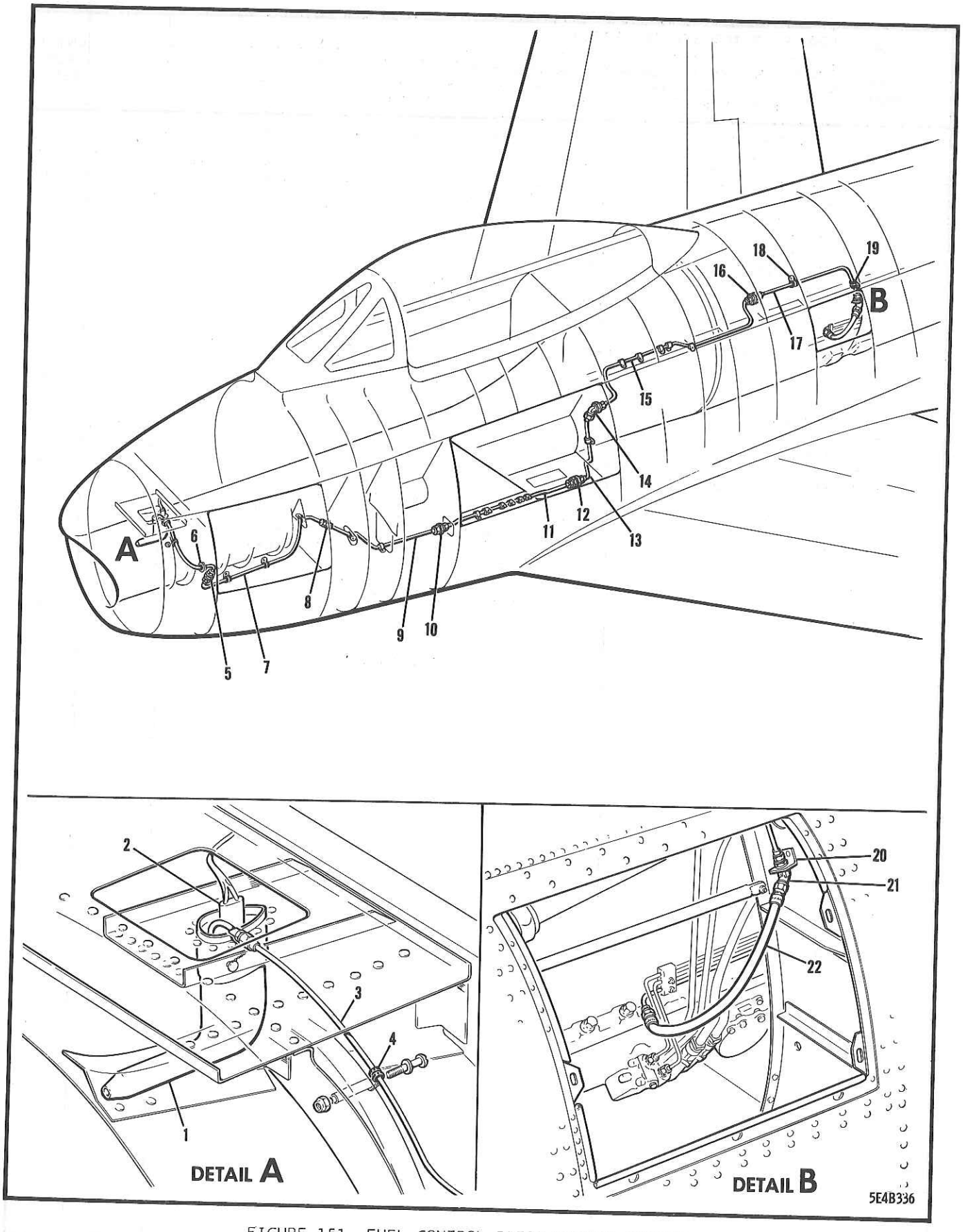

FIGURE 151 FUEL CONTROL PITOT STATIC SYSTEM

FIGURE AND INDEX NUMBER	GROUP / MAJOR ASSEMBLY / PART NUMBER	ELECTRICAL EQUIPMENT / FUEL CONTROL PITOT STATIC SYSTEM / 1234567 NOMENCLATURE	CODE	UNITS PER ASSY
151 -	13A-51031	INSTRUMENT EQUIP. INSTL - FORWARD FUSELAGE (SEE FIG. 150)		REF
- 1	13A-51026	.PITOT - ELECTRICALLY HEATED		1
	2W1-10-8-35	.WASHER - PLAIN (NAA)		4
	AN501A6-4	.SCREW -		4
- 2	AN3115-1	.RECEPTACLE -		1
- 3	13-51015-15	.LINE ASSY - AIRSPEED PRESSURE PITOT TUBE TO UNION STA 25		1
- 4	AN742D6C	.CLAMP - (AS PER EO 05-5E-6A/202)		1
	AN515-8R32	.SCREW - (AS PER EO 05-5E-6A/202)		1
	NAS43DD3-96	.SPACER - (AS PER EO 05-5E-6A/202)		1
	AN960D8	.WASHER - (AS PER EO 05-5E-6A/202)		1
	AN365-832	.NUT - (AS PER EO 05-5E-6A/202)		1
- 5	AN815-4D	.UNION -		1
- 6	AN742D6C	.CLAMP -		1
	AN520-10R8	.SCREW -		1
	AN365-1032	.NUT -		1
- 7	13-51015-17	.LINE ASSY - AIRSPEED PRESSURE STA 25 TO UNION STA 53		1
- 8	AN815-4D	.UNION -		1
- 9	13-51015-19	.LINE ASSY - AIRSPEED PRESSURE STA 53 TO UNION STA 84		1
-10	AN815-4D	.UNION -		1
-11	13-51015-21	.LINE ASSY - AIRSPEED PRESSURE STA 84 TO UNION STA 118		1
-12	AN832-4D	.UNION -		1
	AN960D716	.WASHER -		1
	AN924-4D	.NUT -		1
-13	13-51015-23	.LINE ASSY - STA 118 TO ELBOW STA 124 (PRESSURE)		1
-14	AN837-4D	.ELBOW -		1
	AN832-4D	.UNION -		1
	AN960D716	.WASHER -		1
	AN924-4D	.NUT -		1
-15	13A-51014-3	.LINE ASSY - AIRSPEED PRESSURE BULKHEAD UNION STA 124 TO BHD UNION STA 178		1
-16	AN832-4D	.UNION -		1
	AN960D716	.WASHER -		1
	AN924-4D	.NUT -		1
-17	13A-51014-5	.LINE ASSY - AIRSPEED PRESSURE BHD UNION STA 178 TO BHD UNION STA 205		1
-18	AN742C6D	.CLAMP -		1
	AN515-8R10	.SCREW -		1
	AN960D8	.WASHER -		1
	AN365-832	.NUT -		1
-19	AN742D6C	.CLAMP -		1
	AN520-10R20	.SCREW -		1
	AN960D10	.WASHER -		1
	NAS43DD3-32	.SPACER -		1
	AN365-1032	.NUT -		1
-20	13A-51020	.SUPPORT - FUEL CONTROL UNIT PITOT LINE		1
-21	AN837-4D	.ELBOW -		1
	AN960D716	.WASHER -		1
	AN924-4D	.NUT -		1
-22	AN6270-4-10-1/8	.HOSE ASSY - DETACHABLE SWL FTG LOW PRESS. (ATTACHED TO ELBOW ON ENGINE)		1

(CONTINUED SEE SECTION 16)

SECTION 10

ELECTRICAL EQUIPMENT

TABLE OF CONTENTS

FIGURE	TITLE	PAGE
152	NOSE FUSELAGE PORT SIDE ELECTRICAL EQUIPMENT	688
153	NOSE FUSELAGE STARBOARD SIDE ELECTRICAL	692
154	NOSE GEAR STEERING ELECTRICAL EQUIPMENT	698
155	FORWARD COCKPIT & INSTRUMENT PANEL ELECTRICAL	702
156	COCKPIT STA 53-71 PORT SIDE ELECTRICAL	706
157	COCKPIT STA 71-125 PORT SIDE ELECTRICAL	710
158	COCKPIT STARBOARD SIDE ELECTRICAL EQUIPMENT	718
159	DECK STA 123-144 PORT SIDE ELECTRICAL EQUIPMENT	724
160	DECK STA 123-144 STARBOARD ELECTRICAL EQUIPMENT	728
161	CANOPY & DECK INTERMEDIATE ELECTRICAL EQUIPMENT	732
162	RADIO-BAY PORT SIDE ELECTRICAL EQUIPMENT	736
163	RADIO-BAY STARBOARD SIDE ELECTRICAL EQUIPMENT	740
164	ENGINE-BAY & WHEEL WELL PORT SIDE ELECTRICAL	744
165	ENGINE-BAY & WHEEL WELL STBD SIDE ELECTRICAL	750
166	CENTRE WING ELECTRICAL EQUIPMENT	756
167	OUTER WING ELECTRICAL EQUIPMENT	760
168	EXTENDED LEADING EDGE ELECTRICAL EQUIPMENT (EFFECTIVE AIRCRAFT 23001 TO 23370 INCL)	762
169	EXTENDED SLATTED LEADING EDGE ELECTRICAL (EFFECTIVE AIRCRAFT 23371 & SUBS)	768
170	WING INBOARD TRAILING EDGE ELECTRICAL EQUIPMENT	774
171	WING TIP ELECTRICAL EQUIPMENT	780
172	REAR FUSELAGE STA 236-327 ELECTRICAL EQUIPMENT	782
173	REAR FUSELAGE STA 327-410 ELECTRICAL EQUIPMENT	788
174	RUDDER ELECTRICAL EQUIPMENT	794
175	ARMAMENT ELECTRICAL EQUIPMENT	796
176	ELECTRICAL RELAY STA 26 STARBOARD SIDE PANEL	802
177	ELECTRICAL CENTRE PEDESTAL	806
178	ELECTRICAL CENTRE PEDESTAL PANEL	810
179	FORWARD CONSOLE STA 72-79 PORT SIDE PANEL	812
180	FORWARD CONSOLE STARBOARD SIDE PANEL	814
181	DELETED	
182	FORWARD CONSOLE PORT SIDE PANEL & MOUNT	820
183	REAR CIRCUIT-BREAKER PORT SIDE PANEL	824
184	CIRCUIT-BREAKER STARBOARD SIDE PANEL	826
185	RELAY & CONTROL PANEL	828
186	FLAP PULLEY & SWITCH CLUSTER (EFFECTIVE AIRCRAFT 23001 TO 23100 INCL)	830
187	ELECTRICAL THREE-UNIT LIMIT SWITCH	832

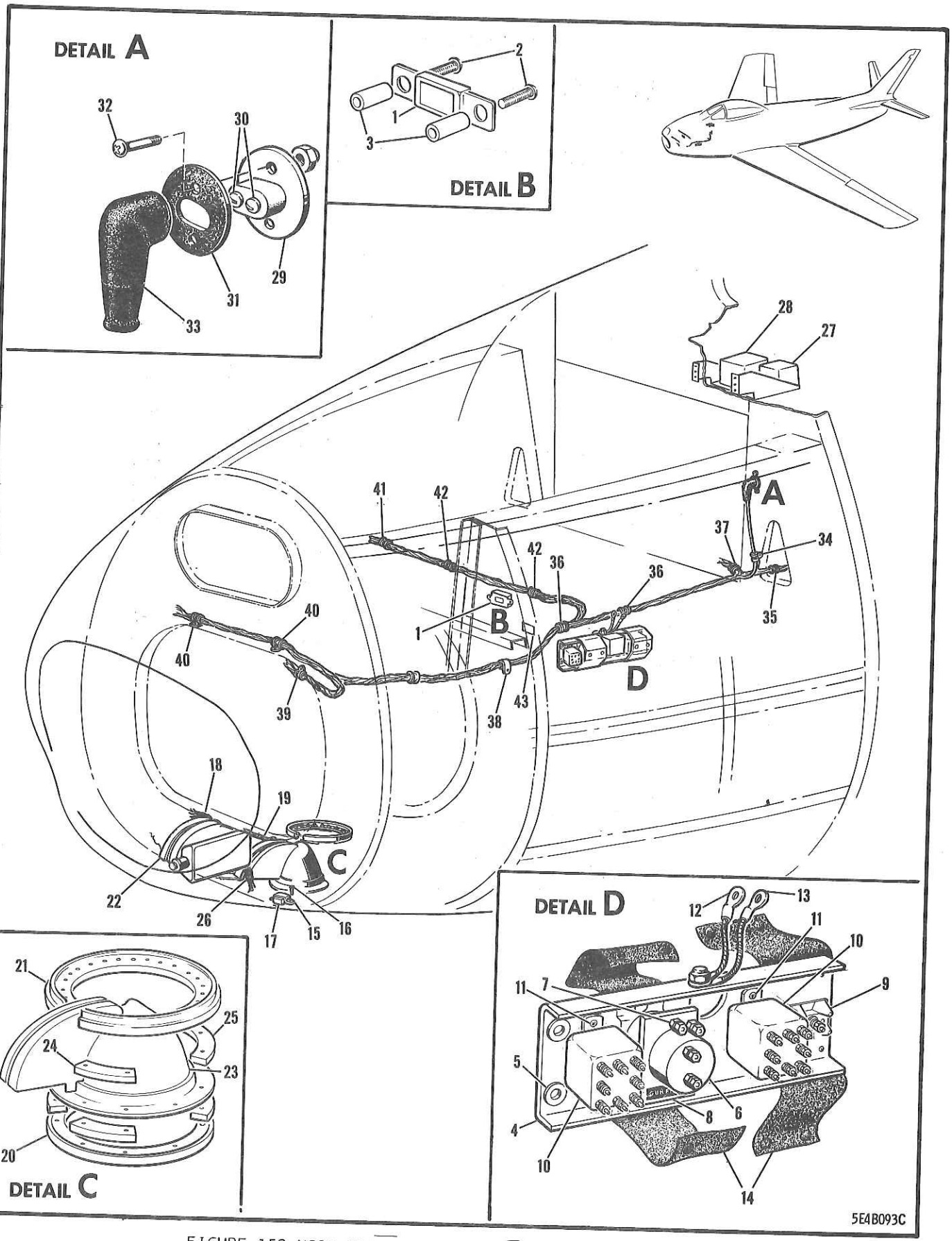

FIGURE 152 NOSE FUSELAGE PORT SIDE ELECTRICAL EQUIPMENT

FIGURE AND INDEX NUMBER	GROUP / MAJOR ASSEMBLY / PART NUMBER	ELECTRICAL EQUIPMENT / NOSE FUSELAGE PORT SIDE ELECTRICAL EQUIPMENT / 1234567 NOMENCLATURE	CODE	UNITS PER ASSY
152 -	191-54031	ELECTRICAL EQUIP. INSTL - FUSELAGE FORWARD (SEE SECTION 3)		NP
- 1	FLLB	•LIMITER - 80-AMPERE (BEC) (COCKPIT WINDSHIELD HEATER)	001-210	1
- 2	AN520-10R12	•SCREW - (LIMITER ATTACHING)	001-210	2
	2W1AL14-20-64	•WASHER - PLAIN (NAA)	001-210	4
- 3	NAS43DD-3-10	•SPACER -	001-210	2
	172-54035	•PANEL ASSY - ELECTRICAL GUN CHARGER RELAY	001-100	1
	172-54035-800	•PANEL ASSY - ELECTRICAL GUN CHARGER RELAY	101-490	1
	172-54035-802	•PANEL ASSY - ELECTRICAL GUN CHARGER RELAY	491-610	1
	172-54035-803	•PANEL ASSY - ELECTRICAL GUN CHARGER RELAY	611-	1
- 4	172-54034	••PANEL - ELECTRICAL GUN CHARGER RELAY	001-490	1
	172-54034-100	••PANEL - ELECTRICAL GUN CHARGER RELAY	491-	1
- 5	AN931-5-9	••GROMMET -		4
- 6	AN3353-1	••RELAY - 50-AMP SPDT UNSEALED (GUN CHARGER RETRACT)	001-490	1
- 7	AN520-10R8	••SCREW -	001-490	2
	AN960D10L	••WASHER -	001-490	2
	AN365-1032	••NUT -	001-490	2
- 8	13A-50034	••DECALCOMANIA - RELAY BASE GUN-FIRING (AS PER EO 05-5E-6A/95)	001-490	1
- 9	AN3436-4-1	••TERMINAL BLOCK ASSY - (AS PER EO 05-5E-6A/95)	001-490	1
	AN515-4R8	••SCREW - (TERMINAL BLOCK ATTACHING) (AS PER EO 05-5E-6A/95)	001-490	2
	AN960D4	••WASHER - (AS PER EO 05-5E-6A/95)	001-490	2
	AN365-440	••NUT - (AS PER EO 05-5E-6A/95)	001-490	2
	AN961-10	••WASHER - (AS PER EO 05-5E-6A/95)	001-490	1
	AN936A108	••WASHER - (AS PER EO 05-5E-6A/95)	001-490	1
	AN341-10	••NUT - (AS PER EO 05-5E-6A/95)	001-490	1
	AN520-10R8	••SCREW - (RELAY ATTACHING)	001-490	2
	AN960D10L	••WASHER -	001-490	2
	AN365-1032	••NUT -	001-490	2
-10	237-EAU	••RELAY ASSY - 10-AMP RESISTIVE 29-VDC(LRC) (LANDING GEAR & TAXI LIGHT CONTROL)		2
-11	AN515-8R8	••SCREW -		4
	AN960D8L	••WASHER -		4
	AN960D10	••WASHER - (UNDER RELAY TO CLEAR GROMMET)		4
	AN365-832	••NUT -		4
-12	AN749-3-3	••JUMPER -	001-100	1
-13	1J1-2-2-6	••JUMPER - WIRE (NAA)	001-100	1
	AN515-8R8	••SCREW -	001-100	1
	AN960-8	••WASHER -	001-100	2
	AN365-832	••NUT -	001-100	1
-14	172-54038-800	••COVER ASSY - ELEC GUN CHARGER RELAY PANEL (AS PER EO 05-5E-6B/2)	001-610	2
	172-54038-801	••COVER ASSY - ELEC GUN CHARGER RELAY PANEL	611-	2
	172-54038-3	•••COVER - ELECTRICAL GUN CHARGER RELAY PNL	001-100	1
	172-54038-103	•••COVER - ELECTRICAL GUN CHARGER RELAY PNL	101-	1
	AN227-6	•••BUTTON -		2
	AN227-7	•••SOCKET -		2
	AN227-8	•••STUD -		2
	AN227-9	•••EYELET -		2
	AN749-3-3	•JUMPER -	101-	1
	1J1-2-2-6	•JUMPER - WIRE (NAA)	101-	1
	AN515-8R8	•SCREW -	101-	1
	AN960-8	•WASHER -	101-	2
	AN365-832	•NUT -	101-	1
	AN515-8R8	•SCREW -		1
	AN520-10R14	•SCREW -		1
	AN520-10R18	•SCREW -		1
	AN520-10R21	•SCREW -		1
	NAS43DD3-20	•SPACER -		5
	NAS43DD3-30	•SPACER -		1

FIGURE AND INDEX NUMBER	GROUP / MAJOR ASSEMBLY / PART NUMBER	ELECTRICAL EQUIPMENT / NOSE FUSELAGE PORT SIDE ELECTRICAL EQUIPMENT / 1234567 NOMENCLATURE	CODE	UNITS PER ASSY
152 -	NAS43DD3-38	•SPACER -		1
	2W1-13-26-40	•WASHER - PLAIN (NAA)		6
	AN960D8L	•WASHER - (ON UP• SIDE OF FWD MTG GROMMET)		1
	AN781-1	•NIPPLE - (GUN CHARGER PANEL)		1
-15	151-54361	•CLIP - ELECTRICAL EA125 FILTER SUPPORTING	001-370	1
-16	AN515-8R8	•SCREW - (CLIP ATTACHING)	001-370	2
	AN960D8L	•WASHER -	001-370	2
-17	EA125	•FILTER - (SMC)	001-370	1
	AN515-8R8	•SCREW - (FILTER TO CLIP ATTACHING)	001-370	2
	AN960D8L	•WASHER -		2
-18	AN3106B18-5S	•PLUG -		1
	AN3057-10A	•ADAPTER -		1
	1J1-2-3-20	•JUMPER - WIRE (NAA)		1
-19	AN3106B18-9S	•PLUG -		1
	AN3057-10A	•ADAPTER -		1
	1J1-2-3-20	•JUMPER - WIRE (NAA)		1
	AN3420-8	•BUSHING -		1
-20	161-54119	•FAIRING - ELECTRIC LANDING LIGHT	001-100	2
-21	161-54114	•STIFFENER ASSY - ELECTRIC LANDING LIGHT		2
	161-54113-3	••PAD - ELEC LANDING LIGHT 130-DEG SHOCK		1
	151-54433	••PAD - ELECTRIC LANDING LIGHT SHOCK		2
-22	161-54118-31	•LIGHT ASSY - ELECTRIC LANDING (COMPLETE) (STARBOARD SIDE)		1
	161-54117-11	••STIFFENER - ELECTRIC LANDING LIGHT RING		1
	161-54113-3	••PAD - ELEC LANDING LIGHT 130-DEG SHOCK		1
	151-54433	••PAD - ELECTRIC LANDING LIGHT SHOCK		1
	D-5530	••LIGHT ASSY - (GMC) (RETRACTABLE LANDING)		1
-23	172-54122-10	•LIGHT ASSY - ELEC LANDING & TAXIING (PORT SIDE)		1
-24	151-54433	••PAD - ELECTRIC LANDING LIGHT SHOCK		2
-25	161-54113-3	••PAD - ELEC LANDING LIGHT 130-DEG SHOCK		1
	G-4710A	••LIGHT ASSY - LANDING & TAXI (GMC)		1
	161-54119	•FAIRING - ELECTRIC LANDING LIGHT	101-	1
	161-54119-801	•FAIRING - ELECTRIC LANDING LIGHT	101-	1
	AN507-632R16	•SCREW -		18
	AN507-632R5	•SCREW - (TO CLOSE UNUSED HOLES)		4
	AN365-632	•NUT - (TO CLOSE UNUSED HOLES)		4
	13-51049	•HARNESS ASSY - AN-N6 CAMERA WIRE	001-370	1
-26	102	••CONNECTOR - ELECTRICAL (BEE)(GSAP CAMERA)	001-370	1
	AN3106-16S1P	••PLUG -	001-370	1
	AN3057-8A	••ADAPTER -	001-370	1
	AN659-1	••TERMINAL -	001-370	2
	AN3054-6	••NUT - (GSAP CAMERA)	001-370	1
	AN931-5-9	••GROMMET -	001-370	1
	AN3100A16S1S	•RECEPTACLE -		1
	AN515-4R6	•SCREW -		4
	AN365-440	•NUT -		4
	AN3057-8A	•ADAPTER -		1
-27	AN3310-1	•RELAY - 10-AMP 4PDT SEALED CONNECTOR MTG (THROTTLE)		1
	AN3102A22-19S	•RECEPTACLE - (IGNITION CONTROL)		1
	AN515-4R5	•SCREW - (RELAY TO BRACKET ATTACHING)		4
	AN365-440	•NUT -		4
-28	9048-26F	•RELAY - 10-AMP 3PDT (LRC) (ENGINE START IGNITION CONTROL) OR		1
	9048-3695	•RELAY - 10-AMP 3PDT (LRC)		
	AN515-6R8	•SCREW - (RELAY TO BRACKET ATTACHING)		6
	AN365-632	•NUT -		4
	140-54008	•PANEL ASSY - ELECTRICAL CONNECTOR PRESSURE		1
-29	140-54008-3	••DISC - PLASTIC MOLDED THERMOC SETTING		1
-30	AN515PB6R20	••SCREW -		2
	2W1SR9-10-032	••WASHER - PLAIN (NAA)		2
	AN935B6L	••WASHER -		2

FIGURE AND INDEX NUMBER	GROUP / MAJOR ASSEMBLY / PART NUMBER	ELECTRICAL EQUIPMENT / NOSE FUSELAGE PORT SIDE ELECTRICAL EQUIPMENT / 1234567 NOMENCLATURE	CODE	UNITS PER ASSY
152 -	2W1AL9-10-032	••WASHER - PLAIN (NAA)		4
	AN341-6	••NUT -		2
-31	151-54010	•GASKET - ELECTRICAL CONN PRESSURE PANEL		1
-32	AN515-6R9	•SCREW -		2
	AN365-832	•NUT -		2
-33	AN781-2	•NIPPLE -		2
-34	TA710-5	•CLAMP - ELECTRICAL HARNESS (TAI)		1
	AN515-8R7	•SCREW -		1
	AN365-832	•NUT -		1
-35	TA710-14	•CLAMP - ELECTRICAL HARNESS (TAI)		1
	NAS43DD3-32	•SPACER -		1
	AN515-8R16	•SCREW -		1
	AN365-832	•NUT -		1
-36	TA710-22	•CLAMP - ELECTRICAL HARNESS (TAI)		2
	AN515-8R8	•SCREW -		2
	AN365-832	•NUT -		2
-37	TA710-14	•CLAMP - ELECTRICAL HARNESS (TAI)		1
	NAS43DD3-32	•SPACER -		1
	AN515-8R16	•SCREW -		1
	AN365-832	•NUT -		1
-38	TA710-12	•CLAMP - ELECTRICAL HARNESS (TAI)		1
	AN515-8R8	•SCREW -		1
	AN365-832	•NUT -		1
-39	TA710-4	•CLAMP - ELECTRICAL HARNESS (TAI)		1
	AN515-8R7	•SCREW -		2
	AN365-832	•NUT -		2
-40	TA710-6	•CLAMP - ELECTRICAL HARNESS (TAI)		2
	AN515-8R7	•SCREW -		2
	AN365-832	•NUT -		2
-41	TA710-24	•CLAMP - ELECTRICAL HARNESS (TAI)		1
	AN515-8R8	•SCREW -		1
	AN365-832	•NUT -		1
-42	TA710-28	•CLAMP - ELECTRICAL HARNESS (TAI)		2
	AN515-8R8	•SCREW -		2
	AN365-832	•NUT -		2
-43	FLLB	•LIMITER - 80-AMPERE (BEC) (WNDSHLD HEATER)	001-210	1
	FSH	•MOUNTING - LIMITER (BEC) (WNDSHLD HEATER)	001-210	1
	AN365-632	•NUT -	001-210	2
	AN341-416	•NUT -	001-210	1
		(CONTINUED SEE FIG. 153)		

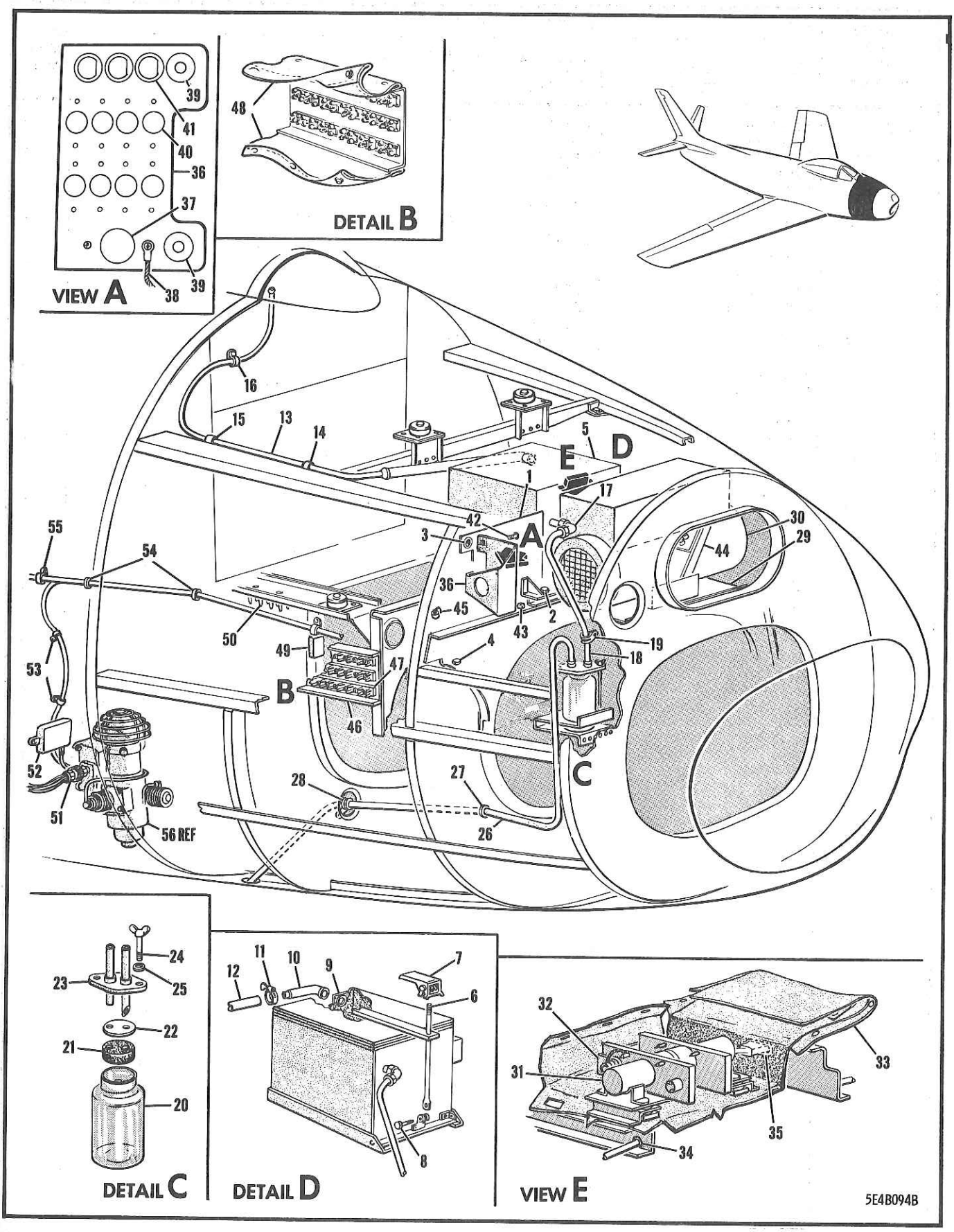

FIGURE 153 NOSE FUSELAGE STARBOARD SIDE ELECTRICAL EQUIPMENT

FIGURE AND INDEX NUMBER	GROUP ELECTRICAL EQUIPMENT MAJOR ASSEMBLY NOSE FUSELAGE STARBOARD SIDE ELECTRICAL EQUIPMENT PART NUMBER	1234567 NOMENCLATURE	CODE	UNITS PER ASSY
153 -	191-54031	ELECTRICAL EQUIP. INSTL - FUSELAGE FORWARD (SEE FIG. 152)		REF
- 1	172-54129-800	.PANEL ASSY - ELECTRICAL RELAY FUS STA 26 (STARBOARD SIDE) (SEE FIG. 176)		REF
	AN781-1	.NIPPLE -	101-	2
	AN961-416	.WASHER -	101-	4
	AN935-416	.WASHER -	101-	4
	AN341-416	.NUT -	101-	4
- 2	AN3-6A	.BOLT - (ELECTRICAL RELAY PANEL ATTACHING)		1
	2W1-13-26-40	.WASHER - PLAIN (NAA)		2
	NAS43DD-3-20	.SPACER -		1
	AN931-5-9	.GROMMET -		1
- 3	AN931A5-9	.GROMMET -		1
	AN3-16A	.BOLT - (ELECTRICAL RELAY PANEL ATTACHING)		1
	2W1-13-26-40	.WASHER - PLAIN (NAA)		2
	NAS43DD-3-24	.SPACER -		1
	NAS43DD-3-58	.SPACER -		1
	AN365-1032	.NUT -	561-	1
- 4	AN931A5-9	.GROMMET -		1
	AN3-6A	.BOLT - (ELECTRICAL RELAY PANEL ATTACHING)		1
	2W1-13-26-40	.WASHER - PLAIN (NAA)		2
	NAS43DD-3-24	.SPACER -		1
	AN365-1032	.NUT -		1
- 5	AN3150-2	.BATTERY - (G.F.E.)(WITH 11749 RECEPTACLE & 11751-1 OR -2 PLUG)		1
- 6	140-54083	.ROD - ELECTRICAL BATTERY HOLD-DOWN		2
- 7	5022-3	.CLAMP ASSY - (HPL) (BATTERY HOLD-DOWN)		2
- 8	AN392-11	.PIN -		2
	AN960D416	.WASHER -		2
	AN380-2-1	.PIN -		2
	AN3-5A	.BOLT -		4
	AN365-1032	.NUT -		4
- 9	AN737TW22	.CLAMP -		1
-10	9555	.ELBOW - (HPL)		1
-11	AN737TW26	.CLAMP -		1
-12	151-54368-950	.TUBE - ELECTRIC BATTERY VENT INTAKE FLEX.		1
-13	151-54370-30	.TUBE ASSY - ELEC BATTERY VENT INTAKE RIGID		1
-14	AN742D4	.CLAMP -		1
	AN515-8R12	.SCREW -		1
	NAS43C-3-16	.SPACER -		1
	AN365-832	.NUT -		1
-15	AN742D4	.CLAMP -		1
	AN515-8R12	.SCREW -		1
	NAS43C-3-16	.SPACER -		1
	AN365-832	.NUT -		1
-16	AN742D4	.CLAMP -		1
	NAS43C-3-24	.SPACER -	001-210	1
	NAS43C-3-16	.SPACER -	211-	1
	AN3-17A	.BOLT -		1
	AN365-1032	.NUT -		1
	AN737TW22	.CLAMP -		1
-17	9555	.ELBOW - (HPL)		1
	AN737TW26	.CLAMP -		1
-18	140-54039-3	.TUBE - BATTERY TO SUMP JAR		1
-19	AN742D12C	.CLAMP -		1
	AN515-8R8	.SCREW -		1
	AN365-832	.NUT -		1
-20		.BOTTLE - AS PER EO 05-5E-6A/342		1
-21	11S1	.SPONGE - BATTERY VENT TRAP (NAA)		1
-22	3S9	.SEAL - BATTERY VENT OUTLET SUMP (NAA)		1

FIGURE and INDEX NUMBER	PART NUMBER	1 2 3 4 5 6 7 NOMENCLATURE	Units Per Assy	Usage on Code
	GROUP	ELECTRICAL EQUIPMENT		
	MAJOR ASSEMBLY	NOSE FUSELAGE STARBOARD SIDE ELECTRICAL EQUIPMENT		
153 -23	HP-600-7-5	Cover Assembly - Battery vent out - sump (As per EO 05-5E-6A/342)		1
-24	AN3DDH54A	Bolt - Battery vent outlet - Sump (as per EO 05-5E-6A/342)		2
	AN350-1032	Nut - (As per EO 05-5E-6A/214)		2
-25	AN960D10	Washer -		2
-26	140-54040-3	Tube - Battery sump to overflow		1
	AN737TW22	Clamp -		2
	AN742D12C	Clamp -		2
	AN515-8R8	Screw -		1
	AN509-8R8	Screw -		1
	AN365-832	Nut -		2
-27	AN931-10-14	Grommet -		1
	295005	Strap - (UCF)		1
	49196	Clip - (UCF)		1
	AN530-6R8	Screw -		1
-28	AN742D14C	Clamp -		3
	AN742D12C	Clamp -		7
	AN742D10C	Clamp -		7
	AN742D8C	Clamp -		2
	AN742D6C	Clamp -		2
	AN515-8R8	Screw -		19
	AN515-8R10	Screw -		2
	AN365-832	Nut -		2
-29	151-54102-10	Shock-Mount Assembly - Main elec inverter	001-370	1
	AN8008D10	Insulator -	001-370	4
	NAS220-8	Screw -	001-370	16
	AN365-832	Nut -	001-370	16
	AN4-7A	Bolt -	001-370	4
	NAS77-4-30	Bushing -	001-370	4
	AN960D416	Washer -	001-370	8
	AN365-428	Nut -	001-370	4
-30	AN3515-1	Inverter - (GFE)	001-370	1
	AN4-11A	Bolt - (Interver attaching)	001-370	4
	AN8013D2	Washer -	001-746	4
	AN749-3-6	Jumper -	001-370	1
	202-54040	Inverter Assembly - electrical main instrument	371-	1
		or		
	202-54040-11	Inverter Assembly - electrical main instrument	371-	
	151-54102-10	Shock-Mount Assembly - Electrical inverter	371-	1
	13B-53038	Spacer - (As per EO 05-5E-6A/231)	371-	4
	AN960-6	Washer -	371-	8
	NAS42DD4-4	Spacer -	371-	8
	AN8008D10	Insulator -	371-	4
	NAS220-8	Screw -	371-	16
	AN365-832	Nut -	371-	16

FIGURE and INDEX NUMBER	GROUP ELECTRICAL EQUIPMENT MAJOR ASSEMBLY NOSE FUSELAGE STARBOARD SIDE ELECTRICAL EQUIPMENT PART NUMBER 1 2 3 4 5 6 7 NOMENCLATURE	Units Per Assy	Usage on Code
153 -30	F137	371-	1
	Inverter - (GFE)		
	or		
	SE-15-1	371-	
	Inverter - (GFE)		
	or		
	F137-1	371-	
	Inverter - (GFE)		
	AN4-7A	371-	3
	Bolt -		
	4B20S4-010	371-	4
	Bushing - Flanged press-fit (NAA)		
	AN365-428	371-	4
	Nut -		
	AN4-10A	371-	1
	Bolt -		
	2W1-18-18-32	371-	1
	Washer - Plain (NAA)		
	AN936A416	371-	1
	Washer -		
	10B1-4-4-6	371-	1
	Jumper - Bonding (NAA)		
	13B-50026	371-	1
	Decalcomania - Electrical modified invt		
	202-54041	371-699	3
	Clip - Elec shock-mount deactivating		
	13B-53036	700-	3
	Collar - Inverter shock-mounting		
	202-54043	371-699	1
	Decalcomania - F137 inverter warning		
	13B53037	700-	1
	Decalcomania - Electrical modified F137 inverter warning		

FIGURE AND INDEX NUMBER	GROUP ELECTRICAL EQUIPMENT MAJOR ASSEMBLY NOSE FUSELAGE STARBOARD SIDE ELECTRICAL EQUIPMENT PART NUMBER	1234567 NOMENCLATURE	CODE	UNITS PER ASSY
153 -	8C7B10-7/8	••COVER - (NAA)	371-699	1
-31	AN3370-1	•RELAY - 200-AMP SPST UNSEALED (BATTERY & WINDSHIELD HEATER)	001-210	2
	AN3370-1	•RELAY - 200-AMP SPST UNSEALED (BATTERY)	211-	1
	AN781-1	•NIPPLE -		2
	AN781-3	•NIPPLE -		2
-32	151-54095-10	•BUS-BAR - ENGINE POWER PANEL RELAY (ELEC)	001-210	1
-33	172-54069-800	•COVER ASSY - ELECTRICAL WNDSHLD ANTI-ICING & BATTERY RELAY	001-371	1
	172-54069-801	•COVER ASSY - ELECTRICAL WNDSHLD ANTI-ICING & BATTERY RELAY	372-	1
	172-54069-103	••COVER - ELECTRICAL WINDSHIELD ANTI-ICING & BATTERY RELAY	001-371	1
	172-54069-203	••COVER - ELECTRICAL WINDSHIELD ANTI-ICING & BATTERY RELAY	372-	1
	AN227-11	••BUTTON -		9
	AN227-12	••SOCKET -		9
	AN227-13	••STUD -		9
	AN227-14	••EYELET -		9
	AN6-6A	•BOLT -	001-210	1
	AN960D616	•WASHER -	001-210	1
	AN365-624	•NUT -	001-210	1
	172-54125	•PLATE ASSY - ELECTRICAL RELAY MOUNTING	001-210	2
	172-54125	•PLATE ASSY - ELECTRICAL RELAY MOUNTING	211-	1
	172-54125-3	••FRAME - ELECTRICAL RELAY MOUNTING PLATE	001-210	1
	172-54125-3	••FRAME - ELECTRICAL RELAY MOUNTING PLATE	211-	1
	AN3-7A	•BOLT -	001-210	4
	AN3-7A	•BOLT -	211-	2
	NAS43C-3-16	•SPACER -	001-210	4
	NAS43C-3-16	•SPACER -	211-	2
	AN931-6-10	•GROMMET -	001-210	4
	AN931-6-10	•GROMMET -	211-	2
	AN960D10	•WASHER -	001-210	4
	AN960D10	•WASHER -	211-	2
-34	AN931-10-14	•GROMMET - (PORT SIDE)		1
-35	AN931-24-28	•GROMMET - (STARBOARD SIDE)		1
	172-54166-20	•BRACKET ASSY - ELECTRICAL FWD FUS CKT/BKR	001-210	1
	172-54166-800	•BRACKET ASSY - ELECTRICAL FWD FUS CKT/BKR	211-370	1
	172-54166-801	•BRACKET ASSY - ELECTRICAL FWD FUS CKT/BKR	371-	1
-36	172-54165	••BRACKET ASSY - ELECTRICAL FWD FUS CKT/BKR	001-210	1
	172-54165-800	••BRACKET ASSY - ELECTRICAL FWD FUS CKT/BKR	211-370	1
	172-54165-801	••BRACKET ASSY - ELECTRICAL FWD FUS CKT/BKR	371-	1
	172-54165-3	•••BRACKET - ELECTRICAL FWD FUS CKT/BKR	001-210	1
	172-54165-103	•••BRACKET - ELECTRICAL FWD FUS CKT/BKR	211-370	1
	172-54165-203	•••BRACKET - ELECTRICAL FWD FUS CKT/BKR	371-	1
-37	PDLM-105	••CIRCUIT-BREAKER - MANUAL RESET (STC) (INVERTER)	001-100	1
	C6766-3-105	••CIRCUIT-BREAKER - (STC) (INVERTER)	101-	1
	AN520-10R14	••SCREW - (CIRCUIT-BREAKER ATTACHING)		2
	2W11-5	••LOCK-WASHER - TAB (NAA)	001-300	2
	AN961-416	••WASHER -	301-	2
-38	AN749-3-6	••JUMPER -		1
-39	AN931-5-9	••GROMMET -		2
	AN341-416	••NUT -	101-	2
	AN935-416	••WASHER -	101-	2
	AN960B416	••WASHER -	101-	2
-40	AN3161-P15	••CIRCUIT-BREAKER - PUSH-BUTTON NON-TRIP FREE		4
	AN3161-P5	••CIRCUIT-BREAKER - PUSH-BUTTON NON-TRIP FREE		4

FIGURE AND INDEX NUMBER	GROUP ELECTRICAL EQUIPMENT MAJOR ASSEMBLY NOSE FUSELAGE STARBOARD SIDE ELECTRICAL EQUIPMENT PART NUMBER	1234567 NOMENCLATURE	CODE	UNITS PER ASSY
153 -	AN515-6R5	••SCREW - (CIRCUIT-BREAKER ATTACHING)		16
	2B1-10-4	••BUS-BAR - (NAA)		1
	2B1-10-2	••BUS-BAR - (NAA)		1
-41	HKP	••HOLDER - PANEL MOUNTED FUSE (BUS)	001-210	3
	HKP	••HOLDER - PANEL MOUNTED FUSE (BUS)	211-370	2
	HKP	••HOLDER - PANEL MOUNTED FUSE (BUS)	371-	3
	AGC-1	••FUSE - GLASS TUBE (BUS)	001-210	3
	AGC-1	••FUSE - GLASS TUBE (BUS)	211-370	2
	AGC-1	••FUSE - GLASS TUBE (BUS)	371-	3
	191-54033	••INSULATOR - ELECTRICAL FWD FUS CKT/BKR		1
	48152	••BUTTON - PLUG (UCF)(USE IN PLACE OF FUSE)	211-370	1
-42	AN515-8R12	•SCREW - (ELECTRIC CIRCUIT-BREAKER ATT)		2
	2W1AL11-18-40	•WASHER - PLAIN (NAA)		2
	NAS43DD-3-20	•SPACER -		1
	AN365-832	•NUT -		2
	AN931-5-9	•GROMMET -		1
	AN341-416	•NUT -	101-	2
	AN961-416	•WASHER -	101-	2
	AN935-416	•WASHER -	101-	2
-43	AN515-6R8	•SCREW - (GROUNDING)		2
	AN365-632	•NUT -		1
-44	172-54108	•PANEL ASSY - ELECTRICAL NOSE SPARE FUSE		1
	172-54108-3	••PANEL - ELECTRICAL NOSE SPARE FUSE		1
	AGC-1	••FUSE - GLASS TUBE (BUS)		4
	HKP	••HOLDER - PANEL MOUNTED FUSE (BUS)		4
	AN515-8R7	•SCREW - (SPARE FUSE PANEL ATTACHING)		2
	AN365-832	•NUT -		2
-45	AN742D11C	•CLAMP -		1
	AN515-8R8	•SCREW -		1
	AN365-832	•NUT -		1
	170-54069	•PANEL ASSY - ELECTRICAL TERM. STRIP STA 35		1
-46	170-54069-3	••PANEL ASSY - ELECTRICAL TERMINAL STRIP		1
-47	NAS45-2-11	••PANEL ASSY -		1
	AN3436-2-11	••TERMINAL BLOCK ASSY - ELECTRICAL	001-100	3
	AN515-4R6	••SCREW - (BLOCK TO PANEL ATTACHING)	101-	3
	AN365-440	••NUT -		6
	AN960-6	••WASHER -		6
	AN961-6	••WASHER -	001-100	33
	AN935-6L	••WASHER -	101-	33
	AN936A6B	••WASHER -	001-100	33
	AN340-6	••NUT -	101-	33
	AN341-6	••NUT -	001-100	33
-48	13-51034-10	•COVER ASSY - TERMINAL STRIP PANEL FUS STA 35 (AS PER EO 05-5E-6B/2)	101-	33
	13-51034-14	•COVER ASSY - TERMINAL STRIP PANEL FUS STA 35 (AS PER EO 05-5E-6B/2)		1
	AN515-8R28	•SCREW - (PANEL ATTACHING)		1
	NAS43DD-3-56	•SPACER -		4
-49	AN3436-6-1	•TERMINAL BLOCK ASSY - ELECTRICAL		4
		OR		1
	3T3-5-1	•TERMINAL BLOCK ASSY - ELECTRICAL (NAA)		
	AN961-416	•WASHER -		1
	AN936A416B	•WASHER -		1
	AN341-416	•NUT -		1
	AN515-6R8	•SCREW - (BLOCK ATTACHING)		2
	AN362-632	•NUT -		2
-50	AN3436-6-3	•TERMINAL BLOCK ASSY - ELECTRICAL		1
		OR		
	3T3-5-3	•TERMINAL BLOCK ASSY - ELECTRICAL (NAA)		
	AN3433-6-3	•BUS-BAR -		1

FIGURE AND INDEX NUMBER	GROUP ELECTRICAL EQUIPMENT MAJOR ASSEMBLY NOSE FUSELAGE STARBOARD SIDE ELECTRICAL EQUIPMENT PART NUMBER	1234567 NOMENCLATURE	CODE	UNITS PER ASSY
153 -	AN961-416	•WASHER -		3
	AN936A416B	•WASHER -		3
	AN341-416	•NUT -		3
	AN515-6R8	•SCREW - (BLOCK ATTACHING)		2
	AN365-632	•NUT -		2
-51	AN3106B16-11S	•PLUG - (GUN CHARGER COMPRESSOR)		1
	AN3057-8A	•ADAPTER - (GUN CHARGER COMPRESSOR)		1
-52	CP53B2EB405K	•CAPACITOR - SIDE TERMINAL (SEC)		1
	AN515-8R6	•SCREW - (CAPACITOR ATTACHING)		2
	AN365-832	•NUT -		2
-53	AN742D8C	•CLAMP -		2
	AN515-8R8	•SCREW -		2
	AN365-1032	•NUT -		2
-54	295134-12A	•GROMMET - (MKM) (PLASTIC)		3
-55	AN742-12C	•CLAMP -		3
	AN515-8R8	•SCREW -		3
	AN365-832	•NUT -		3
-56	32R500-3	COMPRESSOR - •50 CALIBRE GUN PNEUMATIC (SEE SECTION 20)		REF
		(CONTINUED SEE FIG. 154)		

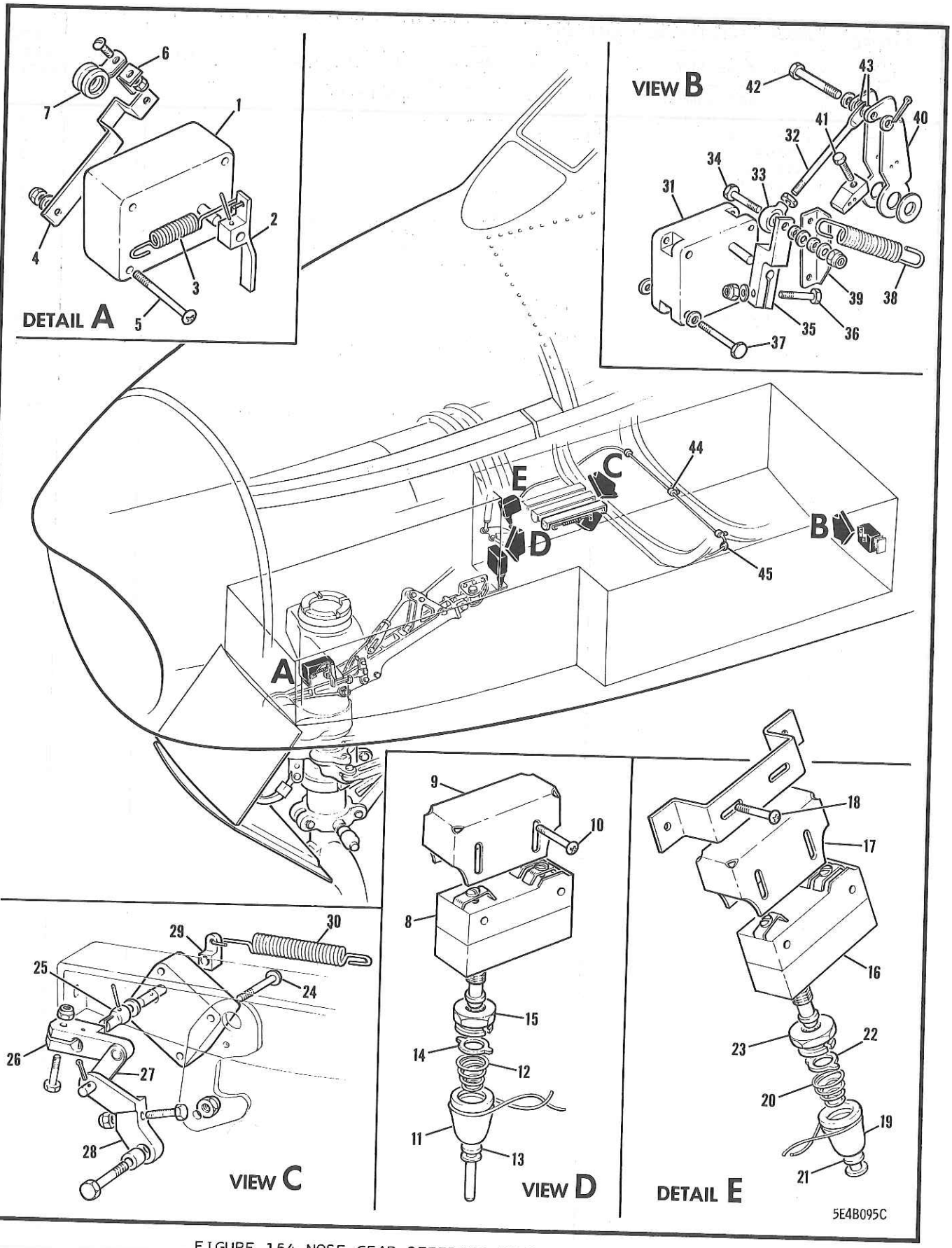

FIGURE 154 NOSE GEAR STEERING ELECTRICAL EQUIPMENT

FIGURE AND INDEX NUMBER	GROUP ELECTRICAL EQUIPMENT MAJOR ASSEMBLY NOSE GEAR STEERING ELECTRICAL EQUIPMENT PART NUMBER	1234567 NOMENCLATURE	CODE	UNITS PER ASSY
154 -	191-54031	ELECTRICAL EQUIP. INSTL - FORWARD FUSELAGE (SEE FIG. 152)		REF
- 1	152-54201-30	.SWITCH ASSY - THREE-UNIT LIMIT (SEE FIG. 187)		REF
- 2	151-54221	.ARM - NOSE GEAR DOWNLOCK SEQUENCE SWITCH		1
- 3	140-54194	.SPRING - GUN PORT DOOR SOLENOID RETURN		1
	AN385-60-4	.PIN -		1
- 4	191-54031-953	.BRACKET - ELECTRICAL FWD FUSELAGE SWITCH	001-300	1
	191-54031-955	.BRACKET - ELECTRICAL FWD FUSELAGE SWITCH	301-	1
- 5	AN515-6R32	.SCREW - (DOWNLOCK SWITCH ATTACHING)		2
	AN960D10L	.WASHER -		2
	AN364-632	.NUT -		2
- 6	2C33	.CLIP - (NAA)		1
- 7	AN742D8C	.CLAMP -		1
	AN520DD10-7	.SCREW -		1
	AN365D1032	.NUT -		1
- 8	BZ-7RQ1T	.SWITCH - SPDT PLUNGER (MSC) (NOSE GEAR DOOR UP)		1
- 9	8C4-3	.COVER - SWITCH PROT (HARD RED FIBRE) (NAA)		1
-10	AN515-6R18	.SCREW - (COVER TO SWITCH ATTACHING)		2
	151-54426	.PLATE ASSY - INFLATABLE CANOPY SEAL EMY DUMP SWITCH (NOSE GEAR UP SWITCH)		1
	102-54257-2	.SEAL ASSY - LANDING GEAR POSITION INDICATOR SWITCH PROTECTOR		1
-11	102-54261	..SLEEVE - LANDING GEAR POSITION INDICATOR SWITCH PROTECTOR		1
-12	102-54259	..SPRING - LANDING GEAR POSITION INDICATOR SWITCH PROT SEAL		1
-13	109-54259	..CAP - LANDING GEAR POSITION INDICATOR SWITCH PROTECTOR SEAL		1
-14	102-54265	..RETAINER - SWITCH PROTECTOR SEAL SPRING		1
-15	102-54256	..NUT - LANDING GEAR POSN IND SW PROTECTOR		1
-16	BZ-7RQ1T	.SWITCH - SPDT PLUNGER (MSC) (NOSE GEAR DOOR UPLOCK INDICATOR)		1
-17	8C4-3	.COVER - SWITCH PROT (HARD RED FIBRE) (NAA)		1
-18	AN515-6R18	.SCREW -		1
	151-54426	.PLATE ASSY - INFLATABLE CANOPY SEAL EMY DUMP SWITCH (NOSE GEAR UPLOCK INDICATOR SWITCH)		1
	102-54257	.SEAL ASSY - LANDING GEAR POSITION INDICATOR SWITCH PROTECTOR		1
-19	102-54261	..SLEEVE - LANDING GEAR POSITION INDICATOR SWITCH PROTECTOR		1
-20	102-54259	..SPRING - LANDING GEAR POSITION INDICATOR SWITCH PROTECTOR SEAL		1
-21	102-54258	..CAP - LANDING GEAR POSITION INDICATOR SWITCH PROTECTOR SEAL		1
-22	102-54265	..RETAINER - SWITCH PROTECTOR SEAL SPRING		1
-23	102-54256	..NUT - LANDING GEAR POSN IND SWITCH PROT		1
-24	AN515-6R40	.SCREW - (NOSE GEAR UPLOCK SWITCH ATT)		2
	AN960-6L	.WASHER -		2
	AN365-632	.NUT -		2
-25	151-54327-3	.EXTENSION - ELECTRICAL SEQUENCE SW SHAFT		1
	2W1AL12-22-64	.WASHER - PLAIN (NAA)		2
	AN385-60-4	.PIN -		1
-26	151-54216	.ARM ASSY - NOSE GEAR UPLOCK SWITCH		1
	151-54216-3	..ARM - NOSE GEAR UPLOCK SWITCH		1
	151-54216-5	..PIN - NOSE GEAR UPLOCK SWITCH		1
	AN515-8R12	.SCREW -		1
	AN365-832	.NUT -		1

FIGURE AND INDEX NUMBER	GROUP ELECTRICAL EQUIPMENT MAJOR ASSEMBLY NOSE GEAR STEERING ELECTRICAL EQUIPMENT PART NUMBER	1234567 NOMENCLATURE	CODE	UNITS PER ASSY
154 -27	151-54215	•LINK ASSY - NOSE GEAR UPLOCK SWITCH		1
	AN960-10	•WASHER -		4
	AN380-2-2	•COTTER-PIN -		2
-28	151-54212	•BELL-CRANK - NOSE GEAR UPLOCK SWITCH		1
	NAS75-3-016	•BUSHING -		1
	5B1-13	•BOLT - ADJUSTING 10-32 (NAA)		1
	AN23-18	•BOLT -		1
	AN365-1032	•NUT -		2
	AN320-3	•NUT -		1
-29	151-54329	•ARM - NOSE GEAR SEQUENCE SW UPLOCK RETURN		1
	AN931-3-5	•GROMMET -		1
	AN385-60-4	•PIN -		1
-30	140-54194-3	•SPRING - GUN PORT DOOR SOLENOID RETURN		1
	176-34801-810	•SEQUENCE & INDICATING MECHANISM INSTL - NOSE GEAR (AS PER EO 05-5E-6A/37)		NP
	176-34850	••MECHANISM ASSY - NOSE LANDING GEAR WHEEL DOOR OPEN SEQUENCE		1
		OR		
	191-540-216A	••SPARE PART ASSY FOR 176-34850 AS PER EO 05-5E-6A/37		
-31	1HA1RH	•••MICROSWITCH - (MSC)		1
-32	176-34852	•••ROD - NOSE LANDING GEAR WHEEL DOOR OPEN SEQUENCE MECHANISM		1
-33	F34-14	•••ROD-END - UNIBAL SPHERICAL BEARING (HEC)		1
	AN316-4R	•••NUT -		1
-34	AN3-11A	•••BOLT - (SPRING & ROD TO ARM ATTACHING)		1
	NAS43C-3-6	•••SPACER -		2
	2W1AL13-18-040	•••WASHER - PLAIN (NAA)		2
	AN365-1032	•••NUT -		1
-35	176-34851	•••ARM - NOSE LANDING GEAR WHEEL DOOR OPEN SEQUENCE MECHANISM		1
-36	AN4-7A	•••BOLT -		1
	AN960D416L	•••WASHER -		1
	AN365-428	•••NUT -		1
-37	AN3-14A	••BOLT - (SWITCH ATTACHING)		2
	AN960D10L	••WASHER -		4
	AN960D10	••WASHER - (BETWEEN SWITCH & FRAME) (AS PER EO 05-5E-6A/185)		4
-38	191-34856	••SPRING - TENSION		1
-39	191-34857	••STOP - NOSE GEAR WHEEL DOOR OPEN SEQ MECH		1
	AN3-15A	••BOLT - (STOP & SWITCH TO FRAME ATTACHING)		2
	AN960D10L	••WASHER -		2
-40	176-34853-800	••LEVER ASSY - NOSE LANDING GEAR WHEEL DOOR OPEN SEQUENCING MECHANISM		1
	176-34854-800	•••LEVER - NOSE LANDING GEAR WHEEL DOOR OPEN SEQUENCING MECHANISM		1
-41	176-34855	•••SCREW ASSY - NOSE LANDING GEAR WHEEL DOOR OPEN SEQUENCING MECH ADJUSTING		1
	191-34855	••••SCREW - NOSE LANDING GEAR WHEEL DOOR OPEN SEQ MECH ACTUATING LEVER ADJ		1
	176-34855-3	••••NUT - NOSE LANDING GEAR WHEEL DOOR OPEN SEQUENCE MECHANISM LEVER ADJUSTING		1
-42	AN393-17	••PIN -		1
-43	NAS43DD-3-8	••SPACER -		2
	AN960D10L	••WASHER -		1
	AN960-716	••WASHER -		1
	AN960-716L	••WASHER -		2
	2W1C16-40-032	••WASHER - PLAIN (NAA)		3
	AN380-2-2	••COTTER-PIN -		1
-44	AN742D9C	•CLAMP -		5

FIGURE AND INDEX NUMBER	GROUP ELECTRICAL EQUIPMENT MAJOR ASSEMBLY NOSE GEAR STEERING ELECTRICAL EQUIPMENT PART NUMBER	1234567 NOMENCLATURE	CODE	UNITS PER ASSY
154 -	AN742D5C	•CLAMP -		5
	AN515-8R7	•SCREW -		10
	AN365-832	•NUT -		10
-45	AN931-11-16	•GROMMET -		1
	AN742D7C	•CLAMP -		4
	10C2A14-37	•CONDUIT - (NAA)		1
	AN515-8R7	•SCREW -		4
	AN365-832	•NUT -		1
-46	151-34141	BRACE ASSY - NOSE GEAR DRAG (SEE SECTION 4)		REF
		(CONTINUED SEE FIG. 155)		

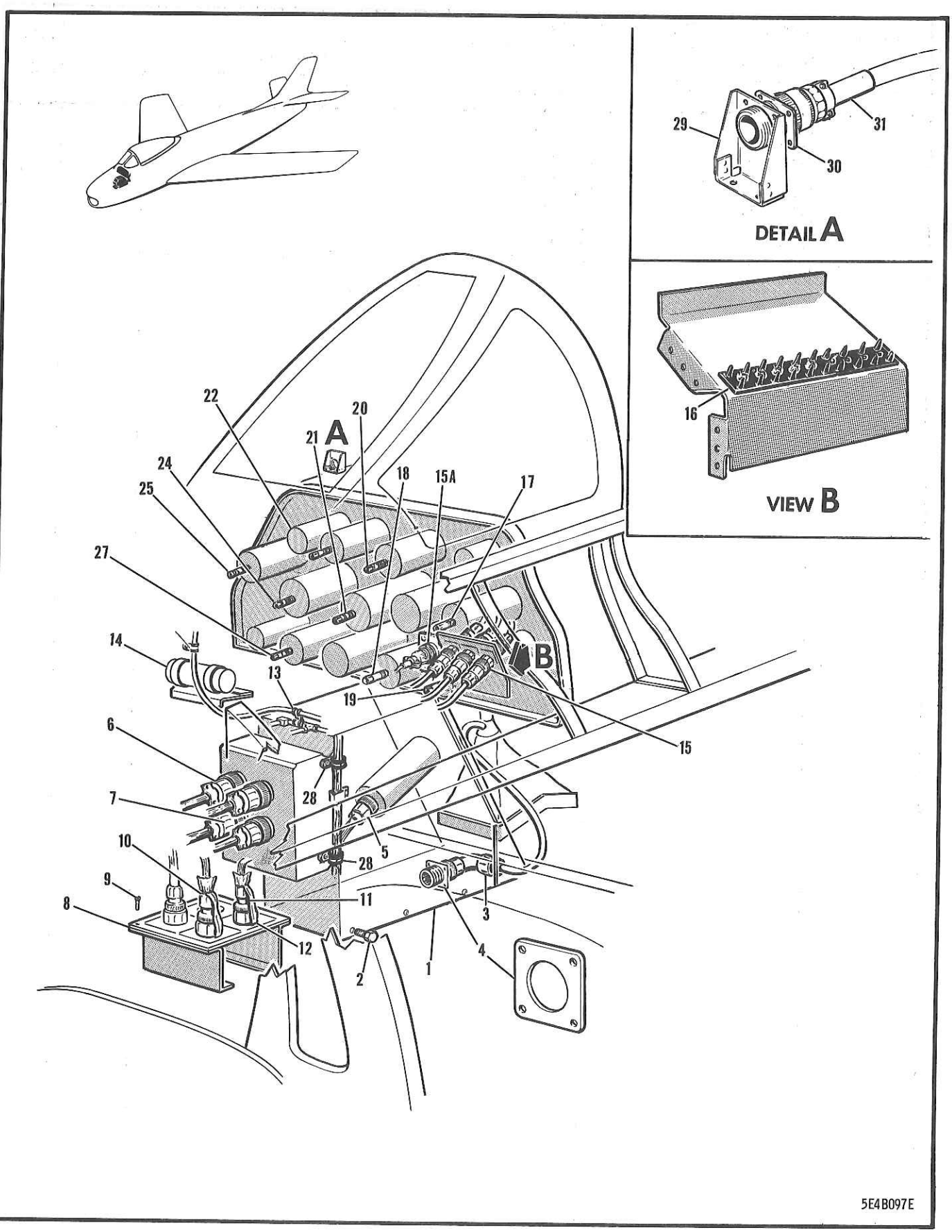

FIGURE 155 FORWARD COCKPIT & INSTRUMENT PANEL ELECTRICAL EQUIPMENT

FIGURE AND INDEX NUMBER	GROUP ELECTRICAL EQUIPMENT MAJOR ASSEMBLY FORWARD COCKPIT & INSTRUMENT PANEL ELECTRICAL PART NUMBER	1234567 NOMENCLATURE	CODE	UNITS PER ASSY
155 -	191-54031	ELECTRICAL EQUIP. INSTL - FORWARD FUSELAGE (SEE FIG. 152)		REF
- 1	172-54104-801	•PEDESTAL ASSY - ELECTRICAL CENTRE (SEE FIG. 177)		REF
	140-54107	•TUBE - WING SLAT LOCK CABLE (LANDING GEAR EMY LOWERING SYSTEM)		1
- 2	AN3-4A	•BOLT -		4
	AN3-3A	•BOLT -		4
	AN520-10R10	•SCREW -		2
	AN960D10L	•WASHER -		10
	AN742D7	•CLAMP -		1
	AN515-8R8	•SCREW -		1
	AN365-832	•NUT -		1
	2W1-13-26-42	•WASHER - PLAIN (NAA)	101-	2
	AN960-8	•WASHER -	101-	2
- 3	AN3102A20-27S	•RECEPTACLE - (CONTROL STICK)		1
	AN515-4R6	•SCREW -		4
	AN936A4	•WASHER -		4
	755-3-2-6	•CLIP - INTEGRALLY BONDED SUPPORT (ADE)		1
	1J1-2-3-12	•JUMPER - WIRE (NAA)		1
	AN515-8R7	•SCREW -		1
	2L7-2	•LUG - SAFETY (NAA)		1
	AN365-832	•NUT -		1
	TA710-16	•CLAMP - ELECTRICAL HARNESS (TAI)		4
	AN515-8R8	•SCREW -		4
	AN365-832	•NUT -		4
	161-54110	•PLATE - CONTROL STICK DISC. ELEC PLUG RTNG		1
- 4	AF20-27	•GROMMET -		1
	144-54071-10	•COVER ASSY - ELECTRICAL CONNECTOR PLUG (CONTROL STICK)		1
- 5	AN3106B22-14S	•PLUG - (RDA UNIT)		1
	AN3057-12A	•ADAPTER -		1
	AN742D8CB	•CLAMP -		1
	AN515-8R8	•SCREW -		1
	1J1-2-2-4	•JUMPER - WIRE (NAA)		1
	AN365-832	•NUT -		1
- 6	AN3106B32-7S	•PLUG - (PEDESTAL DISCONNECT)		2
- 7	AN3106B28-11S	•PLUG -		2
	AN3057-20A	•ADAPTER -		2
	AN3057-16A	•ADAPTER -		2
	144-54071	•COVER ASSY - ELECTRICAL CONNECTOR PLUG		4
	AN742D7CB	•CLAMP -		1
	AN515-8R6	•SCREW -		1
	AN365-832	•NUT -		1
	1J1-2-2-6	•JUMPER - WIRE (NAA)		1
- 8	161-54042	•PANEL - ELECTRICAL PRESSURE DISC. PLUG		1
- 9	AN515-8R7	•SCREW - (PANEL ATTACHING)		18
	AN365-832	•NUT -		18
	AN520-10R7	•SCREW -		3
	AN365-1032	•NUT -		3
	AN3100M32-7S	•RECEPTACLE - (PORT SIDE FORWARD)		1
-10	AN3106M32-7P	•PLUG - (PORT SIDE FORWARD)		1
	AN3100M28-11S	•RECEPTACLE - (PORT SIDE REAR)		1
-11	AN3106M28-11P	•PLUG - (PORT SIDE REAR)		1
	AN515-8R8	•SCREW -	001-300	4
	AN515-8R10	•SCREW -	301-	4
	AN515-6R8	•SCREW -		4
	AN365-632	•NUT -		4
	AN365-832	•NUT -		4
-12	144-54071	•COVER ASSY - ELECTRICAL CONNECTOR PLUG		2

FIGURE AND INDEX NUMBER	GROUP	ELECTRICAL EQUIPMENT	CODE	UNITS PER ASSY
	MAJOR ASSEMBLY	FORWARD COCKPIT & INSTRUMENT PANEL ELECTRICAL		
	PART NUMBER	1234567 NOMENCLATURE		
155 -	1J1-2-2-6	•JUMPER - WIRE (NAA)		6
	1J1-2-3-4	•JUMPER - WIRE (NAA)	001-300	1
	1J1-2-2-4	•JUMPER - WIRE (NAA)	301-	1
	1J1-2-3-6	•JUMPER - WIRE (NAA)		2
	2L7-2	•LUG - SAFETY (NAA)		2
	AN742D5CB	•CLAMP -		5
	AN742D8CB	•CLAMP -		2
	140-71052-15	•GASKET - RADIO PRESSURE PLUG	301-	1
	4G3-28	•GASKET - PRESSURE PLUG (NAA)	301-	1
	AN742D9CB	•CLAMP -		2
-13	TA710-10	•CLAMP - ELECTRICAL HARNESS (TAI)		1
	AN742D9	•CLAMP -		2
	AN515-8R8	•SCREW -		1
	AN365-832	•NUT -		1
-14	HC1560	•CAPACITOR - (MPR) (DRY ELECT. 6000-UF)		1
	AN742D30C	•CLAMP - (CAPACITOR ATTACHING)		2
	AN509-8R9	•SCREW -		2
	AN365-832	•NUT -		2
	AN781-1	•NIPPLE -		2
	AN515-4R6	•SCREW -		2
	AN365-440	•NUT -		2
-15	AN3100A18-1S	•RECEPTACLE -		1
	AN3100A20-27S	•RECEPTACLE -		1
	AN3100A22-14S	•RECEPTACLE -		1
	AN3106B18-1P	•PLUG -		1
	AN3106B20-27P	•PLUG -		1
	AN3106B20-14P	•PLUG -		1
	AN3057-10A	•ADAPTER -		2
	AN3057-12A	•ADAPTER -		1
	2W1R24-36-91	•WASHER - PLAIN (NAA)	001-200	2
	2W1SR32-36-91	•WASHER - PLAIN (NAA)	201-	1
	2W1R32-36-91	•WASHER - PLAIN (NAA)	001-200	1
	2W1SR24-36-91	•WASHER - PLAIN (NAA)	201-	2
	2W1F48-36-63	•WASHER - PLAIN (NAA)	201-	1
	2W1F40-36-63	•WASHER - PLAIN (NAA)	201-	2
	2W1SR28-36-93	•WASHER - PLAIN (NAA)	201-	1
	AN3054-12	•NUT -		3
	AN515-4R8	•SCREW -		12
	AN365-440	•NUT -		12
	2L7-2	•LUG - SAFETY (NAA)		2
-15A	AN3100A16-9P	•RECEPTACLE -(AS PER EO 05-5E-6A/273 & 274)		1
	AN3057-8A	•ADAPTER - (AS PER EO 05-5E-6A/273 & 274)		1
	AN515B4R8	•SCREW -		4
	AN365-440	•NUT -		4
-16	AN3436-2-10	•TERMINAL BLOCK ASSY - ELECTRICAL		1
	AN515-4R7	•SCREW - (TERMINAL BLOCK ATTACHING)		2
	AN365-440	•NUT -		2
	AN961-6	•WASHER -		10
	AN936A6B	•WASHER -		10
	AN341-6	•NUT -		10
	397-10	•COVER - ELECTRICAL TERMINAL BLOCK (HEN)	101-	1
-17	AN3106B14S2S	•PLUG - (RADIO COMPASS)		1
	AN3057-6A	•ADAPTER -		1
-18	AN3106A10SL3S	•PLUG - (TURN & BANK)	001-200	1
	AN3106B10SL3S	•PLUG - (TURN & BANK)	201-	1
	AN3054-4	•NUT -		1
	2W1R16-18-91	•WASHER - PLAIN (NAA)	001-200	1
	2W1F24-18-63	•WASHER - PLAIN (NAA)	201-	1
	2W1SR16-18-91	•WASHER - PLAIN (NAA)	201-	1
-19	AN3106B14S2S	•PLUG - (MAIN RING BEARING OIL TEMP)	001-370	1
	AN3054-6	•NUT -	001-370	1
	2W1R16-22-91	•WASHER - PLAIN (NAA)	001-370	1
-20	AN3106B14S2S	•PLUG - (HYDRAULIC PRESSURE WARNING)		1
	AN3054-6	•NUT -		1

FIGURE AND INDEX NUMBER	GROUP ELECTRICAL EQUIPMENT MAJOR ASSEMBLY FORWARD COCKPIT & INSTRUMENT PANEL ELECTRICAL PART NUMBER	1234567 NOMENCLATURE	CODE	UNITS PER ASSY
155 -	2W1R16-22-91	•WASHER - PLAIN (NAA)	001-200	1
	2W1SR16-22-91	•WASHER - PLAIN (NAA)	201-	1
	2W1F32-22-63	•WASHER - PLAIN (NAA)	201-	1
				1
-21	AN3106B14S5S	•PLUG - (SLAVED DIRECT GYRO)		1
	AN3057-6A	•ADAPTER -		1
-22	AN3106B14S2S	•PLUG - (OIL PRESSURE)		1
	AN3054-6	•NUT -		1
	2W1F32-22-63	•WASHER - PLAIN (NAA) (OIL PRESSURE)	201-	1
	2W1R16-22-91	•WASHER - PLAIN (NAA) (OIL PRESSURE)	001-200	1
	2W1SR16-22-91	•WASHER - PLAIN (NAA)	201-	1
-23		•DELETED		1
-24	AN3108B16S1S	•PLUG - (ARTIFICIAL HORIZON) (AS PER EO 05-5E-6A/54)		1
	AN3057-8A	•ADAPTER - (AS PER EO 05-5E-6A/54)	001-300	1
-25	AN3106A10SL3S	•PLUG - (TACHOMETER)	301-	1
	AN3106B10SL3S	•PLUG - (TACHOMETER)		1
	AN3057-4A	•ADAPTER -		1
-26		•DELETED		1
-27	AN3106B14S2S	•PLUG - (LIQUIDENSITOMETER INDICATOR)		1
	AN3057-6A	•ADAPTER -		2
-28	TA710-8	•CLAMP - ELECTRICAL HARNESS (TAI)		1
	AN515-8R10	•SCREW -		1
	AN515-8R8	•SCREW -		1
-29	13B-53012	•BRACKET ASSY - GUNSIGHT CAMERA MOUNTING (AS PER EO 05-5E-6A/65)		1
	13B-53012-3	••BRACKET - GUNSIGHT CAMERA MOUNTING		1
	13B-53012-5	••NUT - GUNSIGHT CAMERA MOUNTING CHANNEL (MAKE FROM 22G1-82-8-2) (ESN)		1
	AN515-8R12	•SCREW - (BRACKET TO SHROUD ATTACHING)		1
	AN515-8R8	•SCREW - (BRACKET TO SHROUD ATTACHING)		1
-30	AN3100A16S1S	•RECEPTACLE - (AS PER EO 05-5E-6A/65)		1
	AN3057-8A	•ADAPTER - (AS PER EO 05-5E-6A/65)		1
-31	10C2E9-14	•CONDUIT - (NAA)		4
	AN515-4R6	•SCREW -		4
	AN365-440	•NUT - (GUNSIGHT CAMERA)		
		(CONTINUED SEE FIG. 156)		

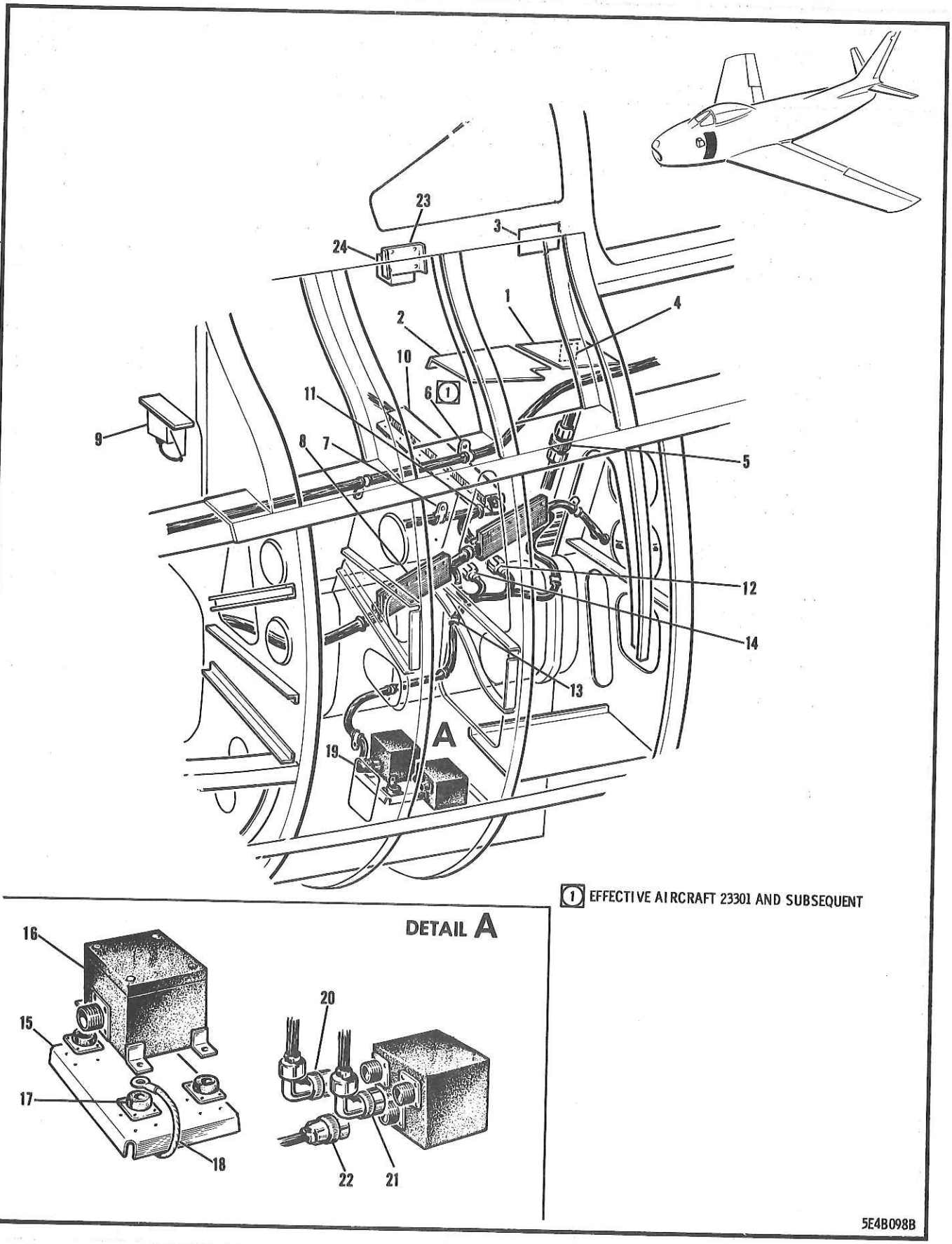

FIGURE 156 COCKPIT STA 53-71 PORT SIDE ELECTRICAL EQUIPMENT

FIGURE AND INDEX NUMBER	GROUP ELECTRICAL EQUIPMENT MAJOR ASSEMBLY COCKPIT STA 53-71 PORT SIDE ELECTRICAL EQUIPMENT PART NUMBER	1234567 NOMENCLATURE	CODE	UNITS PER ASSY
156 -	191-54031	ELECTRICAL EQUIP. INSTL - FORWARD FUSELAGE (SEE FIG. 152)		REF
- 1	172-54028	•PANEL ASSY - ELECTRICAL FORWARD CONSOLE (PORT SIDE) (SEE FIG. 179)		REF
- 2		•DELETED		
- 3	151-54422-800	•NAME-PLATE - PILOT CANOPY CONTROL SWITCH	001-430	1
	151-54422-10	•NAME-PLATE - PILOT CANOPY CONTROL SWITCH	431-	1
	AN3022-6	•SWITCH - SINGLE-POLE THREE-HOLE MTG TOGGLE (CANOPY CTL)		1
	AN3225-1	•GUARD -		1
	AN515-6R7	•SCREW -		4
	AN3022-7	•SWITCH - SINGLE-POLE THREE-HOLE MTG TOGGLE (TOW TARGET JETTISON)	001-430	1
	AN3228-2	•GUARD -	001-430	1
- 4	AN3436-2-1	•TERMINAL BLOCK ASSY - ELECTRICAL		1
	AN507-440R6	•SCREW -		2
	AN365-440	•NUT -		2
	AN961-6	•WASHER -		1
	AN936A6B	•WASHER -		1
	AN341-6	•NUT -		1
	397-1	•COVER - ELECTRICAL TERMINAL BLOCK (HEN)	101-	1
- 5	AN3106B10SL3S	•CONNECTOR - (OXYGEN REGULATOR PLUG)		1
	AN3057-4A	•ADAPTER -		1
	AN742D17C	•CLAMP -		1
	AN515-8R10	•SCREW -		1
- 6	TA710-14	•CLAMP - ELECTRICAL HARNESS (TAI)	301-	1
	AN515-8R8	•SCREW -	301-	3
	AN365-832	•NUT -	301-	3
	TA710-20	•CLAMP - ELECTRICAL HARNESS (TAI)	301-	3
	10C1-1-2	•CONDUIT - (NAA)	301-	1
	AN515-8R6	•SCREW -	301-	2
	AN960D8L	•WASHER -	301-	2
	AN365-832	•NUT -	301-	2
- 7	TA710-8	•CLAMP - ELECTRICAL HARNESS (TAI)		2
	AN515-8R10	•SCREW -		1
	AN365-832	•NUT -		1
- 8	10C1-2-7	•CONDUIT - (NAA) (PORT & STARBOARD SIDE)		6
		OR		
	S-1245-2-7	•CONDUIT - (CAN)	301-	24
	AN515-8R7	•SCREW -	301-	48
	AN960D8L	•WASHER -	301-	24
	AN365-832	•NUT -		
- 9	CP53B2EB405K	•CAPACITOR - SIDE TERMINAL (SEC)	001-210	1
	AN507-832R5	•SCREW - (CAPACITOR ATTACHING)	001-210	2
	AN365-832	•NUT -	001-210	2
-10	10C1-1-5	•CONDUIT - (NAA)	001-100	1
		OR		
	S-1245-1-5	•CONDUIT - (CAN)	001-100	
	10C1-1-16	•CONDUIT - (NAA)	101-	1
		OR		
	S-1245-1-16	•CONDUIT - (CAN)	101-	
	AN742D7C	•CLAMP -	101-	1
	AN515-8R8	•SCREW -	001-100	2
	AN515-8R7	•SCREW -	101-	3
	AN515-8R8	•SCREW -	101-	1
	AN515-8R9	•SCREW -	101-	1
	AN960D8C	•WASHER -	101-	1

FIGURE AND INDEX NUMBER	GROUP ELECTRICAL EQUIPMENT MAJOR ASSEMBLY COCKPIT STA 53-71 PORT SIDE ELECTRICAL EQUIPMENT PART NUMBER	1234567 NOMENCLATURE	CODE	UNITS PER ASSY
156 -	AN365-832	•NUT -	001-100	2
	AN365-832	•NUT -	101-	3
-11	AN931B9-13	•GROMMET -		1
-12	AN3100C28-12P	•RECEPTACLE -		1
	4G3-28	•GASKET - PRESSURE PLUG (NAA)	301-	1
	2L7-2	•LUG - SAFETY (NAA)	301-	1
	AN3106B28-12S	•CONNECTOR -		1
	AN515-8R6	•SCREW -	001-300	4
	AN515-6R8	•SCREW -	301-	4
	AN960-6	•WASHER - (UNDER SCREW HEAD)	301-	4
	2W1V10-9-32	•WASHER - PLAIN (NAA)		4
	AN365-632	•NUT -		4
	AF41	•FERRULE -	001-100	1
	AN3054-16	•NUT -	001-100	1
	AN3057-16A	•ADAPTER -		1
	AN3057-16A	•ADAPTER -	101-	2
-13	TA710-14	•CLAMP - ELECTRICAL HARNESS (TAI)		1
	TA710-8	•CLAMP - ELECTRICAL HARNESS (TAI)		1
	AN515-8R8	•SCREW -		3
	TA710-10	•CLAMP - ELECTRICAL HARNESS (TAI)		1
	TA710-7	•CLAMP - ELECTRICAL HARNESS (TAI)		3
	AN515-8R7	•SCREW -		4
	AN365-832	•NUT -		7
-14	AN3100C24-28P	•RECEPTACLE -		1
	AN3106B24-28S	•CONNECTOR -		1
	4G3-24	•GASKET - PRESSURE PLUG (NAA)	301-	1
	AN515-6R10	•SCREW -	301-	4
	2L7-2	•LUG - SAFETY (NAA)	301-	1
	2W1V10-9-32	•WASHER - PLAIN (NAA)		4
	AN365-632	•NUT -		4
	AF41	•FERRULE -	001-100	1
	AN3054-16	•NUT -		1
	AN3057-16A	•ADAPTER -		1
	10C2B4-12	•CONDUIT - (NAA)	101-	1
	2W1F60-43-63	•WASHER - PLAIN (NAA)	101-	1
	AN3420-16	•BUSHING -	101-	1
	AN3420-12	•BUSHING -	101-	1
	172-54024	•BRACKET ASSY - ELECTRICAL POSITION LIGHT FLASHER	001-210	1
-15	172-54023	••BRACKET - ELECTRICAL C2 FLASHER MOUNTING	001-210	1
-16	32660	••FLASHER - TYPE C2 (G•F•E•)	001-210	1
-17	AN8008D21	••INSULATOR -	001-210	4
	AN515-6R6	••SCREW -	001-210	8
	AN960D8	••WASHER -	001-210	4
	AN365-632	••NUT -	001-210	8
-18	AN749-3-3	••JUMPER -	001-210	1
	AN515-8R14	••SCREW -	001-210	4
	AN8013D1	••WASHER -	001-210	4
	AN960D8L	••WASHER -	001-210	3
	AN365-832	••NUT -	001-210	4
	AN3-3A	•BOLT -	001-210	4
	AN960D10	•WASHER -	001-210	1
-19	AN3106B16S8S	•CONNECTOR - (FLASHER)	001-210	1
	AN3057-8A	•ADAPTER -	001-210	1
	2L7-2	•LUG - SAFETY (NAA)	001-210	1
-20	AN3108B14S5P	•PLUG - (FUEL TOTALIZER AMPLIFIER)	001-210	1
	AN3057-6A	•ADAPTER -	001-210	1
	2L7-2	•LUG - SAFETY (NAA)	001-210	1
-21	AN3108B14S9P	•CONNECTOR - (FUEL TOTALIZER AMPLIFIER)	001-210	1
	AN3057-6A	•ADAPTER -	001-210	1

FIGURE AND INDEX NUMBER	GROUP ELECTRICAL EQUIPMENT MAJOR ASSEMBLY COCKPIT STA 53-71 PORT SIDE ELECTRICAL EQUIPMENT PART NUMBER	1234567 NOMENCLATURE	CODE	UNITS PER ASSY
156 -	2L7-2	•LUG - SAFETY (NAA)	001-210	1
-22	AN3106A18-12P	•CONNECTOR - (FUEL TOTALIZER AMPLIFIER)	001-210	1
	AN3054-10	•NUT -	001-210	1
	AN931-4-12	•GROMMET -	001-210	1
	2L7-2	•LUG - SAFETY (NAA)	001-210	1
	AN520-10R10	•SCREW -	001-210	4
	2W1R16-22-91	•WASHER - PLAIN (NAA)	001-210	1
	2W1R20-30-125	•WASHER - PLAIN (NAA)	001-210	1
	AN960D10	•WASHER -	001-210	4
-23	13-51053	•BRACKET - BOMB ROCKET TANK SALVO RELAY (AS PER EO 05-5E-6A/21)	001-020	1
-24	237-EAU	•RELAY ASSY - 10-AMP RESISTIVE 29-VDC (LRC) (BOMB ROCKET TANK SALVO) (AS PER EO 05-5E-6A/21)	001-020	1
	AN515-8R7	•SCREW -	001-020	4
	AN365-1032	•NUT -	001-020	4
	AN742D8C	•CLAMP - (AS PER EO 05-5E-6A/21)	001-020	1
		(CONTINUED SEE FIG. 157)		

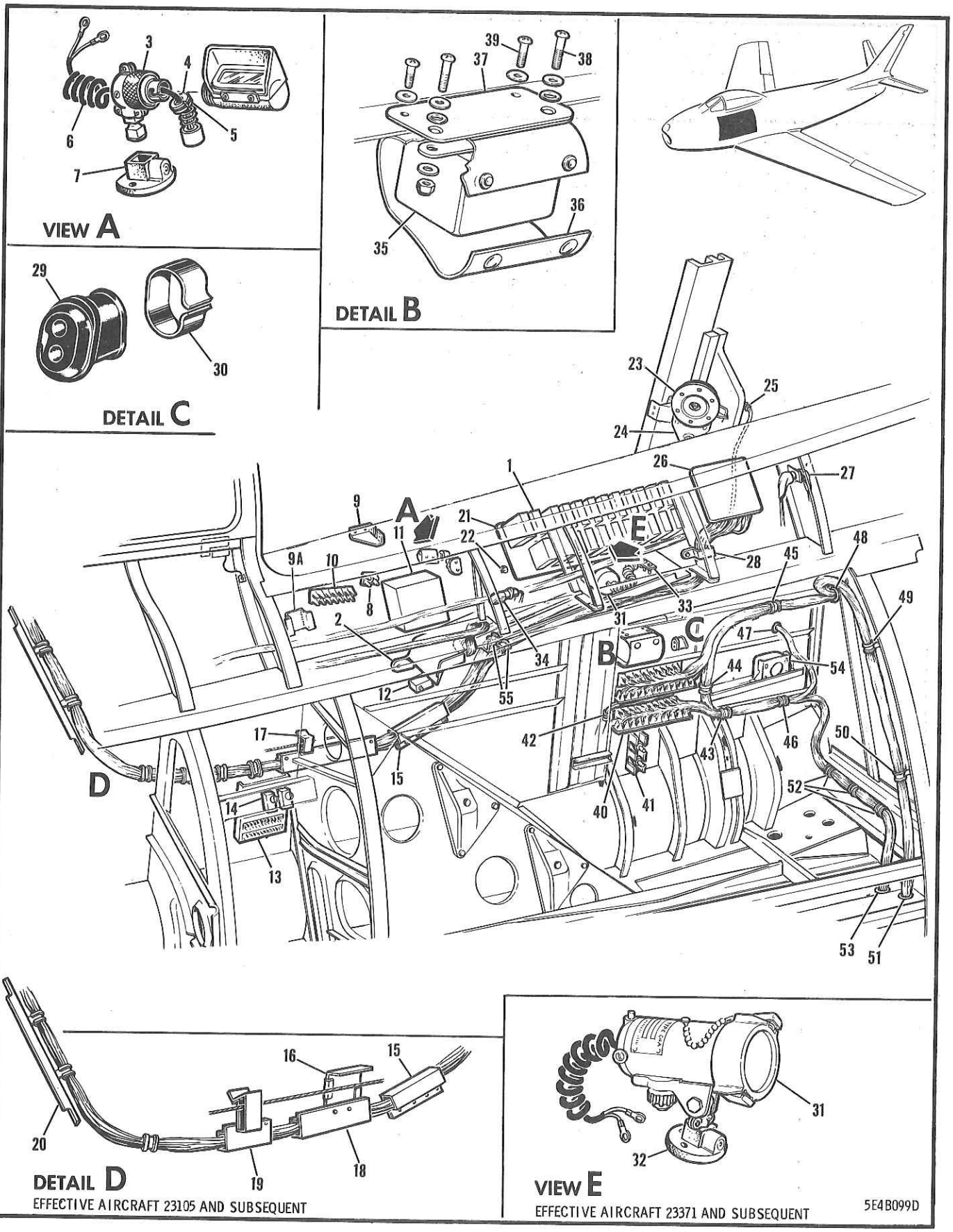

FIGURE 157 COCKPIT STA 71-125 PORT SIDE ELECTRICAL EQUIPMENT

FIGURE AND INDEX NUMBER	GROUP ELECTRICAL EQUIPMENT MAJOR ASSEMBLY COCKPIT STA 71-125 PORT SIDE ELECTRICAL EQUIPMENT PART NUMBER	1234567 NOMENCLATURE	CODE	UNITS PER ASSY
157 -	191-54031	ELECTRICAL EQUIP. INSTL - FORWARD FUSELAGE (SEE FIG. 152)		REF
- 1	170-54068-801	•PANEL ASSY - REAR ELEC CIRCUIT-BREAKER PORT SIDE (SEE FIG. 183)		REF
- 2	172-54065	•PANEL ASSY - ELECTRICAL CONSOLE FWD PORT SIDE (SEE FIG. 182)		REF
	172-54058-7	•MOUNTING ASSY - ELECTRICAL COCKPIT AIR SELECTOR & TEMP CTL (SEE FIG. 182)		REF
	AN515-4R6	•SCREW -	201-	2
	AN3436-2-11	•TERMINAL BLOCK ASSY -	201-	1
	AN3433-2-2	•BUS -	201-	1
	AN515-4R7	•SCREW -	201-	2
	AN936A6B	•WASHER -	201-	11
	AN961-6	•WASHER -	201-	11
	AN341-6	•NUT -	201-	11
	AN742D6CB	•CLAMP -		1
	1J1-2-2-8	•JUMPER - WIRE (NAA)		1
	AN515-8R7	•SCREW -		1
	AN365-832	•NUT -		1
	172-54086-1	•FLOOD-LIGHT ASSY - ELEC PRIMARY INSTRUMENT (PORT SIDE) (AS PER EO 05-5E-6A/65)		1
	A-4902	••POST & BRACKET ASSY - (GMC) (INST LIGHT)		1
- 3	A-4255A5	••LIGHT - INSTRUMENT RED (GMC)		1
- 4	172-54086-3	••WASHER - ELEC PRIMARY INST FLOOD-LIGHT		1
- 5	172-54086-5	••WASHER - ELEC PRIMARY INST FLOOD-LIGHT		1
- 6	172-54086-7	••CORD - ELEC PRIMARY INST FLOOD-LIGHT		1
	AN659-1	••TERMINAL -		1
- 7	191-54031-954	•BASE - FORWARD FUS (CKPT EXTN TYPE LIGHT) (MAKE FROM 1028-4 (SOD)) OR		1
	SA4335	•BASE - (SPI) (AS PER EO 05-5E-6A/65)		1
	AN507-632R8	•SCREW -		2
	AN960D6	•WASHER -		2
	AN365-632	•NUT -		2
	AN3131-303	•LAMP -		1
	AN515-6R8	•SCREW - (AS PER EO 05-5E-6A/65)		1
- 8	AN3436-2-1	•TERMINAL BLOCK ASSY - (AS PER EO 05-5E-6A/65)		1
	AN515-4R5	•SCREW - (TERMINAL BLOCK ATTACHING) (AS PER EO 05-5E-6A/65)		2
	AN365-440	•NUT -		2
	AN961-6	•WASHER -		1
	AN936A6B	•WASHER -		1
	AN341-6	•NUT -		1
	397-1	•COVER - ELECTRIC TERMINAL BLOCK (HEN) (AS PER EO 05-5E-6A/65)		1
	TA710-5	•CLAMP - ELECTRICAL HARNESS (TAI) (AS PER EO 05-5E-6A/65)		1
	AN515-8R8	•SCREW - (AS PER EO 05-5E-6A/65)		1
	AN365-832	•NUT -		1
	AN931-4-7	•GROMMET -		1
- 9	172-54091	•SUPPORT - ELECTRICAL INSTRUMENT PANEL AUX PORT SIDE FLOOD-LIGHT		1
	1028-4	•BASE - (SOD)		4
	AN515-6R8	•SCREW -		4
	AN365-632	•NUT -		1
	13B-52052-12	•TERMINAL BLOCK ASSY - (AS PER EO 05-5E-6A/273 & 274)		1
- 9A	13B-52052-14	••BRACKET -		3
	7-140	••TERMINAL BLOCK ASSY - (JHB)		6
	AN515-8R10	••SCREW -		2
	AN515-8R7	•SCREW - (AS PER EO 05-5E-6A/273 & 274)		1
-10	AN3436-2-6	•TERMINAL BLOCK ASSY -		2
	AN515-4R7	•SCREW - (TERMINAL BLOCK ATTACHING)		2
	AN960D4	•WASHER -		2
	AN365-440	•NUT -		2

FIGURE AND INDEX NUMBER	GROUP ELECTRICAL EQUIPMENT MAJOR ASSEMBLY COCKPIT STA 71-125 PORT SIDE ELECTRICAL EQUIPMENT PART NUMBER	1234567 NOMENCLATURE	CODE	UNITS PER ASSY
157 -	AN961-6	•WASHER -		6
	AN936A6B	•WASHER -		6
	AN341-6	•NUT -		6
	8C7B6-5-8	•COVER - (NAA)		1
-11	151-54007-20	•RELEASE CONTROL ASSY - ELECTRICAL	101-	1
	AAF24975	••RELEASE CONTROL - (G•F•E•)		1
		OR		
	MIL-C-7050	••RELEASE CONTROL - (G•F•E•)		
	AN515-6R7	•SCREW -		4
	AN365-632	•NUT -		4
	151-54190	•SHIELD - ELECTRICAL RELEASE WIRE PROTECTOR		1
	AN931-16-22	•GROMMET -		1
	AN960D6	•WASHER -		4
	191-54077	•INSULATOR - ELECTRICAL ROCKET RELAY CTL	201-210	1
	191-54077-100	•INSULATOR - ELECTRICAL ROCKET RELAY CTL	211-	1
	AN515-4R6	•SCREW -	201-	2
	2W18-6	•WASHER - PLAIN (NAA)	201-210	2
	NAS43DD-1-10	•SPACER -	201-210	2
	AN960-4	•WASHER -	211-	2
	AN935-4L	•WASHER -	211-	2
-12	BZ-3YDT	•SWITCH - SPLIT-CONTACT BASIC (MSC) (ENGINE CONTROL)		1
	151-54426	•PLATE ASSY - INFLATABLE CANOPY SEAL EMY DUMP SWITCH		1
	151-54426-3	••PLATE - CANOPY SEAL EMERGENCY DUMP SWITCH		1
	AN515-6R18	•SCREW -		2
	AN960D6L	•WASHER -		2
	8C4-3	•COVER - SWITCH PROT (HARD RED FIBRE) (NAA)		1
-13	172-54071-10	•PANEL ASSY - ELECTRICAL TERMINAL STRIP FUSELAGE STA 80		1
	172-54071-5	••PANEL - ELECTRICAL TERM• STRIP FUS STA 80		1
	AN3436-2-7	••TERMINAL BLOCK ASSY -		5
	AN515-4R6	••SCREW -		10
	AN365-440	••NUT -		10
	AN961-6	••WASHER -		35
	AN936A6B	••WASHER -		35
	AN341-6	••NUT -		35
	AN515-8R7	•SCREW - (PANEL ATTACHING)		4
	AN365-832	•NUT -		4
	397-4	•COVER - ELECTRICAL TERMINAL BLOCK (HEN)	101-200	1
	397-7	•COVER - ELECTRICAL TERMINAL BLOCK (HEN)	101-200	4
	397-7	•COVER - ELECTRICAL TERMINAL BLOCK (HEN)	201-	5
-14	140-54117-801	•SWITCH ASSY - POSITION INDICATOR & CONTROL (CANOPY & GEAR)		2
	BZ-3YST	••SWITCH - SPLIT-CONTACT BASIC (MSC)		1
	140-54117-3	••WIRE - SWITCH BRASS		1
	10-15045	••BOOT - (MSC) (RUBBER DUST)		1
	151-54426	•PLATE ASSY - INFLATABLE CANOPY SEAL EMY DUMP SWITCH		1
	151-54426-3	••PLATE - CANOPY SEAL EMERGENCY DUMP SWITCH		1
	AN515-6R40	•SCREW -		2
	159-48167	•INSULATOR - FUEL SELECTOR VALVE CONTROL MICROSWITCH	001-300	1
	159-48167	•INSULATOR - FUEL SELECTOR VALVE CONTROL MICROSWITCH	301-	2
	AN936A4	•WASHER -		8
-15	10C1-3-8	•CONDUIT - (NAA)		1
		OR		
	S-1245-3-8	•CONDUIT - (CAN)		
	NAS43DD-3-16	•SPACER -		1

FIGURE AND INDEX NUMBER	GROUP ELECTRICAL EQUIPMENT MAJOR ASSEMBLY COCKPIT STA 71-125 PORT SIDE ELECTRICAL EQUIPMENT PART NUMBER	1234567 NOMENCLATURE	CODE	UNITS PER ASSY
157 -	NAS43DD-3-24	•SPACER -		1
	AN509-8R11	•SCREW -		1
	AN509-8R7	•SCREW -		2
	AN365-832	•NUT -		3
	AN515-8R7	•SCREW -		4
	TA710-6	•CLAMP - ELECTRICAL HARNESS (TAI)		4
	TA710-8	•CLAMP - ELECTRICAL HARNESS (TAI)		2
	TA710-12	•CLAMP - ELECTRICAL HARNESS (TAI)		2
	TA710-14	•CLAMP - ELECTRICAL HARNESS (TAI)		1
	AN515-8R8	•SCREW -		9
	AN960D8L	•WASHER -		9
-16	191-54047	•GUARD ASSY - ELECTRICAL THROTTLE QUADRANT	101-	1
-17	172-54082	•CONDUIT - ELECTRICAL WIRE FUSELAGE STA 84	001-104	1
	NAS43C-3-8	•SPACER -	001-100	3
	NAS43DD-3-13	•SPACER -	001-100	6
	AN515-8R10	•SCREW -	001-100	6
	NAS43DD-3-13	•SPACER -	101-104	2
	NAS43DD-3-24	•SPACER -	101-104	2
	AN936B8	•WASHER -	101-104	2
	AN515-8R18	•SCREW -	101-104	2
	AN340-8	•NUT -	101-104	2
	AN365-832	•NUT -	101-104	2
-18	10C1-2-7	•CONDUIT - (NAA)	105-	1
		OR	105-	
	S-1245-2-7	•CONDUIT - (CAN)	105-	2
	NAS43DD-3-8	•SPACER -	105-	6
	AN960D8	•WASHER -	105-	2
	AN515-8R14	•SCREW -	105-	1
	AN515-8R7	•SCREW -	105-	3
	AN365-832	•NUT -	105-	1
-19	10C1-2-2	•CONDUIT - (NAA)	105-	
		OR	105-	2
	S-1245-2-2	•CONDUIT - (CAN)	105-	1
	AN960D8	•WASHER -	105-	1
	AN515-8R8	•SCREW -	105-	2
	AN515-8R7	•SCREW -		1
	AN365-832	•NUT -		1
-20	172-54083	•ANGLE ASSY - WIRE HARNESS SUP• FUS STA 56 (PORT SIDE)		1
	172-54083-3	••ANGLE - WIRE HARNESS SUPPORT FUS STA 56		2
	NAS43C-3-8	•SPACER -		1
-21	170-54080-800	•NAME-PLATE - ELECTRICAL CIRCUIT-BREAKER FWD PORT (AS PER EO 05-5E-6A/224)		6
	AN515-6R6	•SCREW - (NAME-PLATE ATTACHING)		1
-22	AN3157-4	•LIGHT ASSY - PRESS-TO-TEST INDICATOR		1
	AN3161-P10	•CIRCUIT-BREAKER - PUSH-BUTTON NON-TRIP FREE (SCREW DESTRUCTOR)		1
	AN3161-P35	•CIRCUIT-BREAKER - PUSH-BUTTON NON-TRIP FREE (COCKPIT CANOPY)	001-490	1
	AN3161-P15	•CIRCUIT-BREAKER - PUSH-BUTTON NON-TRIP FREE (GUN-FIRE)	491-	1
	AN3161-P25	•CIRCUIT-BREAKER - PUSH-BUTTON NON-TRIP FREE (GUN-FIRE)		1
	AN500A6-7	•SCREW - (REAR ELEC CIRCUIT-BREAKER PORT SIDE PANEL ATTACHING)		4
	AN515-8R7	•SCREW - (REAR ELEC CIRCUIT-BREAKER PORT SIDE PANEL ATTACHING)		

FIGURE AND INDEX NUMBER	GROUP ELECTRICAL EQUIPMENT MAJOR ASSEMBLY COCKPIT STA 71-125 PORT SIDE ELECTRICAL EQUIPMENT PART NUMBER	1234567 NOMENCLATURE	CODE	UNITS PER ASSY
157 -	AN500A8-7	•SCREW - (REAR ELEC CIRCUIT-BREAKER PORT SIDE PANEL ATTACHING)		1
-23	TYPE J2	•HORN - (SQD) (LANDING GEAR WARNING)		1
		OR		
	AN5776-1	•SIGNAL - EMERGENCY WARNING (SPEC MIL-S-6904A)		
	AN515-8R10	•SCREW - (HORN ATTACHING)		3
	NAS43DD-3-8	•SPACER - (AS PER EO 05-5E-6A/194)		1
	NAS43DD-3-5	•SPACER - (AS PER EO 05-5E-6A/194)		2
-24	13B-53035	•BRACKET - LANDING GEAR WARNING HORN FUSE (AS PER EO 05-5E-6A/194)		1
	HKP	•HOLDER - PANEL MOUNTED FUSE (BUS) (AS PER EO 05-5E-6A/194)		1
	AGC-1-1/2	•FUSE - GLASS TUBE (BUS) (AS PER EO 05-5E-6A/194)		1
-25	AN742D16	•CLAMP -		2
	TA710-7	•CLAMP - ELECTRICAL HARNESS (TAI)		2
	AN515-8R8	•SCREW -		2
	AN365-832	•NUT -		2
-26	YHS100S-6	•PANEL - PRESSURIZED DISCONNECT (BEC)		1
	A3	•CLAMP - PANEL MOUNTING (BEC)		3
	130-51066	•GASKET - PRESSURIZED THERMOCOUPLE PANEL		1
	140-54222	•COVER - FUSELAGE STA 114 ELEC DISCONNECT PRESSURE PORT SIDE		1
	AN515-8R8	•SCREW -	001-100	11
	8-32NC3	•SCREW - (SPS) (SELF-LOCKING SOC/HD CAP)	101-	11
	140-54108-3	•CLIP - PRESSURIZED ELEC DISC. PNL HOLD-DOWN		1
	AN960D6	•WASHER -		3
	AN515-6R7	•SCREW -		6
	172-54088-1	•SHIELD ASSY - ELECTRICAL PRESSURE DISC.		1
	AN742D6CB	•CLAMP -		2
	1J1-2-214	•JUMPER - WIRE (NAA)		1
	AN515-8R7	•SCREW -		1
	AN507-632R7	•SCREW -		3
	AN365-832	•NUT -		2
	1J1-2-3-16	•JUMPER - WIRE (NAA)		1
	AN515-8R6	•SCREW -		1
-27	AN781-4	•NIPPLE -		2
	AN341-616	•NUT -		1
	2W1P25-28-125	•WASHER - PLAIN (NAA)		1
	AN364B624	•NUT -		2
	AN960D616	•WASHER -		2
	151-54037-5	•TERMINAL - ELEC PRESSURIZED (PRESS. BLOCK)	001-490	1
	151-54037-105	•TERMINAL - ELEC PRESSURIZED (PRESS. BLOCK)	491-	1
-28	443-14-2-8AF	•CLIP - DUAL LINE SUPPORT (ADE)	001-100	1
	AN742D26C	•CLAMP -	101-	1
	NAS43DD-3-8	•SPACER -	101-	1
	AN509-8R7	•SCREW -		1
	AN960D8L	•WASHER -	301-	1
	AN365-832	•NUT -		1
-29	151-58133	•SEAL - HYDRAULIC FLAP VALVE CABLE PRESSURE	001-100	1
-30	151-58134	•CLIP - HYD FLAP VALVE CABLE PRESSURE SEAL	001-100	1
-31	MIL-L-6484A	•LIGHT ASSY - COCKPIT EXTN TYPE NO. 86A75		1
-32	191-54031-954	•BASE - FORWARD FUS (CKPT EXTN TYPE LIGHT) (MAKE FROM 1028-4 (SOD))	371-	1
		OR		
	SA4335	•BASE - (SPI) (EXTENSION WITH C-4A LIGHT)		
	AN515-6R8	•SCREW -	001-370	2
	AN515-6R7	•SCREW -	371-	2
	AN960-6	•WASHER -	371-	2

FIGURE AND INDEX NUMBER	GROUP ELECTRICAL EQUIPMENT MAJOR ASSEMBLY COCKPIT STA 71-125 PORT SIDE ELECTRICAL EQUIPMENT PART NUMBER	1234567 NOMENCLATURE	CODE	UNITS PER ASSY
157 -	2W1V10-9-32	•WASHER - PLAIN (NAA)	486-	2
	AN365-632	•NUT -	371-	2
-33	AN3436-2-1	•TERMINAL BLOCK ASSY -		1
	AN515-4R6	•SCREW - (TERMINAL BLOCK ATTACHING)		2
	AN365-440	•NUT -		2
	AN341-6	•NUT -		1
	AN936A6B	•WASHER -		1
	AN961-6	•WASHER -		1
	AN515-6R6	•SCREW -		1
	AN365-632	•NUT -		1
	397-1	•COVER - ELECTRICAL TERMINAL BLOCK (HEN)	101-	1
	AN742D6C	•CLAMP -		1
-34	AN3034-3	•LIGHT ASSY - DIRECT INSTRUMENT		1
-35	233-51A	•RELAY - (LRC) (24-VDC SPDT) (CANOPY SEAL)		1
-36	151-54428-800	•COVER ASSY - INFLATEABLE CANOPY SEAL ELEC RELAY (AS PER EO 05-5E-6B/2)		1
-37	151-54427-3	•PLATE - INFLATEABLE CANOPY SEAL ELEC RELAY		1
-38	AN515-6R8	•SCREW -		2
	AN960D6	•WASHER -		2
	AN931-3-5	•GROMMET -		2
	AN960D6	•WASHER -		2
	AN365-632	•NUT -		2
-39	AN515-6R6	•SCREW -		2
	NAS43DD-1-16	•SPACER -		2
	AN960D6	•WASHER -		3
-40	AN3436-2-12	•TERMINAL BLOCK ASSY -		1
	AN3436-2-10	•TERMINAL BLOCK ASSY -		12
	AN515-4R7	•SCREW - (TERMINAL BLOCK ATTACHING)		12
	AN365-440	•NUT -		2
	2W1V8-14-32	•WASHER - PLAIN (NAA)		2
	AN960D8	•WASHER -		1
	AN3433-2-2	•BUS -		46
	AN936A6B	•WASHER -		46
	AN961-6	•WASHER -		46
	AN341-6	•NUT -		3
	397-12	•COVER - ELECTRICAL TERMINAL BLOCK (HEN) (AS PER EO 05-5E-6B/2)		1
	397-10	•COVER - ELECTRICAL TERMINAL BLOCK (HEN) (AS PER EO 05-5E-6B/2)		1
-41	3T3-5-2	•TERMINAL BLOCK ASSY - ELECTRICAL (NAA) OR		
	AN3436-6-2	•TERMINAL BLOCK ASSY -		4
	AN781-2	•NIPPLE -		2
	AN961-416	•WASHER -		2
	AN936A416B	•WASHER -		2
	AN341-416	•NUT -		2
	AN515-6R8	•SCREW - (TERMINAL BLOCK ATTACHING)		2
	AN365-832	•NUT -		1
-42	TA710-10	•CLAMP - ELECTRICAL HARNESS (TAI)		1
	AN515-8R8	•SCREW -		1
	AN365-832	•NUT -		1
-43	TA710-12	•CLAMP - ELECTRICAL HARNESS (TAI)		1
	AN515-8R7	•SCREW -		1
	AN365-832	•NUT -		1
-44	TA710-2	•CLAMP - ELECTRICAL HARNESS (TAI)		1
	AN515-8R7	•SCREW -		1
	AN365-832	•NUT -		1
-45	TA710-16	•CLAMP - ELECTRICAL HARNESS (TAI)		1
	AN515-8R7	•SCREW -		1
	AN365-832	•NUT -		

FIGURE AND INDEX NUMBER	GROUP ELECTRICAL EQUIPMENT MAJOR ASSEMBLY COCKPIT STA 71-125 PORT SIDE ELECTRICAL EQUIPMENT PART NUMBER	1234567 NOMENCLATURE	CODE	UNITS PER ASSY
157 -46	TA710-14	•CLAMP - ELECTRICAL HARNESS (TAI)		1
	AN515-8R7	•SCREW -		1
	AN365-832	•NUT -		1
-47	295134-10A	•GROMMET - (MKM) (PLASTIC) (PORT SIDE)		1
-48	295134-24B	•GROMMET - (MKM) (PLASTIC) (PORT SIDE)	001-200	1
	AN931A24S28	•GROMMET - (PORT SIDE)	201-	1
-49	TA710-8	•CLAMP - ELECTRICAL HARNESS (TAI)		1
	NAS43DD-3-24	•SPACER -		1
	AN520-10R14	•SCREW -		1
	AN365-1032	•NUT -		1
-50	TA710-8	•CLAMP - ELECTRICAL HARNESS (TAI)		1
	AN515-8R7	•SCREW -		1
	AN365-832	•NUT -		1
-51	AN931A24-28	•GROMMET -		1
-52	TA710-14	•CLAMP - ELECTRICAL HARNESS (TAI)		1
	AN515-8R7	•SCREW -		3
	AN365-832	•NUT -		3
-53	295134-10C	•GROMMET - (MKM) (PLASTIC)		3
-54	12288	•FILTER - (ARM)(DUAL CKT 5-AMP RADIO NOISE)		1
	AN515-8R8	•SCREW -		1
	2W1SR16-18-91	•WASHER - PLAIN (NAA)		4
	2W1SR14-18-62	•WASHER - PLAIN (NAA)		1
	2W1F24-18-63	•WASHER - PLAIN (NAA)	201-	1
	2W1F22-18-63	•WASHER - PLAIN (NAA)		1
	AN3106B12S3P	•PLUG - (HEAT & VENT RADIO NOISE FILTER)		1
	AN3054-4	•NUT -		1
	AN742D5CB	•CLAMP -		1
-55	5C8-11	•CLAMP - ELECTRICAL WIRE HARNESS (NAA)		1
	AN507-632R7	•SCREW -		2
	AN365-632	•NUT -		6
	AN509-8R7	•SCREW -		6
	AN365-832	•NUT -		2
				2
		(CONTINUED SEE FIG. 158)		

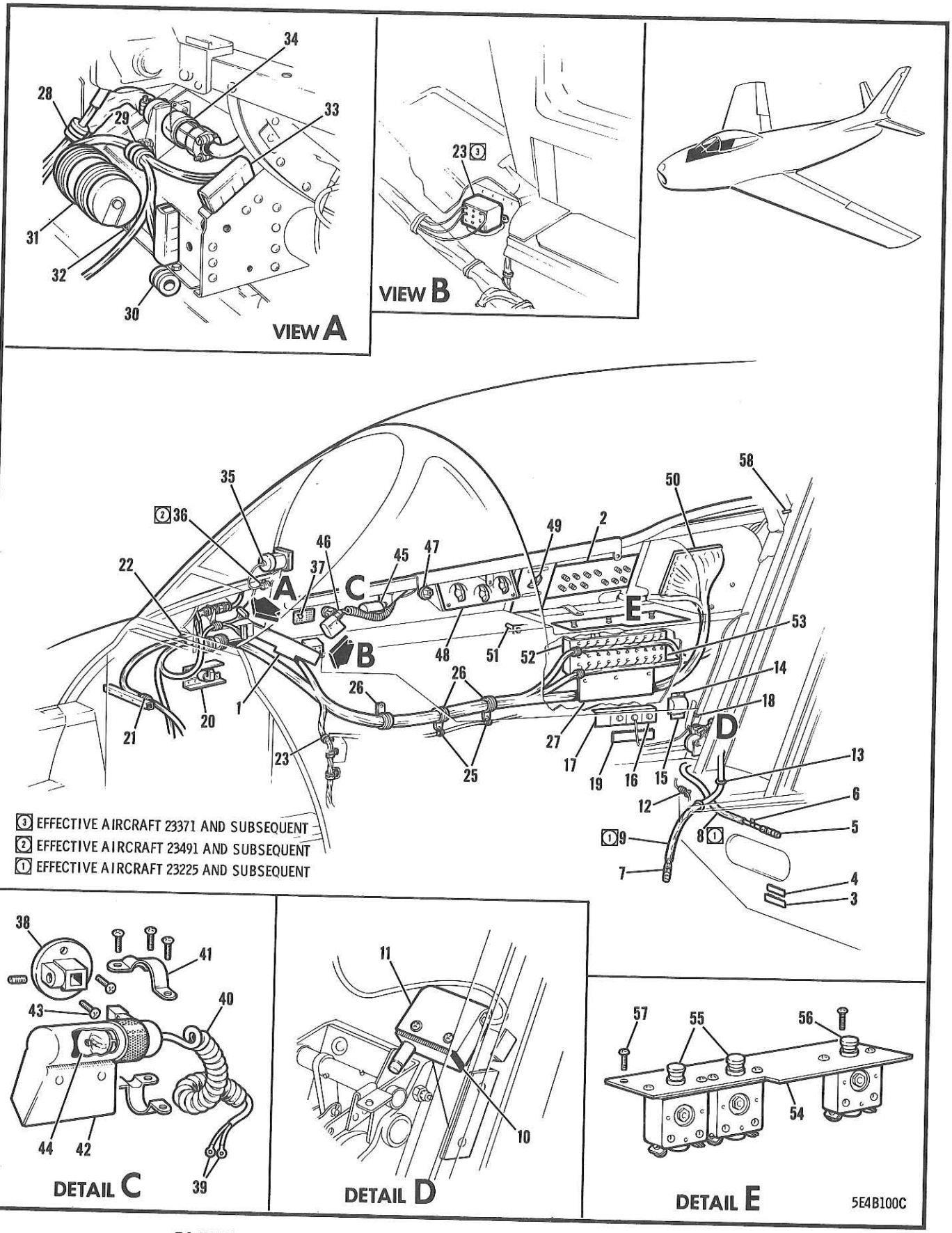

FIGURE 158 COCKPIT STARBOARD SIDE ELECTRICAL EQUIPMENT

FIGURE AND INDEX NUMBER	GROUP / MAJOR ASSEMBLY / PART NUMBER	1234567 NOMENCLATURE	CODE	UNITS PER ASSY
	GROUP	ELECTRICAL EQUIPMENT		
	MAJOR ASSEMBLY	COCKPIT STARBOARD SIDE ELECTRICAL EQUIPMENT		
158 -	191-54031	ELECTRICAL EQUIP. INSTL - FORWARD FUSELAGE (SEE FIG. 152)		REF
- 1	172-54095-10	•PANEL ASSY - ELECTRIC CONSOLE STBD SIDE FORWARD (SEE FIG. 180)		REF
- 2	172-54040-800	•PANEL ASSY - ELEC CKT/BKR (STARBOARD SIDE) (SEE FIG. 184)		REF
- 3	AN3436-2-10	•TERMINAL BLOCK ASSY - (FUS STA 125 STBD)		1
	AN515-4R7	•SCREW - (TERMINAL BLOCK ATTACHING)		2
	AN960D4	•WASHER -		2
	AN365-440	•NUT -		2
	AN961-6	•WASHER -		10
	AN936A6B	•WASHER -		10
	AN341-6	•NUT -		10
	397-10	•COVER - ELECTRICAL TERMINAL BLOCK (HEN)	101-	1
- 4	AN3436-2-9	•TERMINAL BLOCK ASSY - (FUS STA 125 STBD)		1
	AN515-4R7	•SCREW - (TERMINAL BLOCK ATTACHING)		2
	AN960D4	•WASHER -		2
	AN365-440	•NUT -		2
	AN961-6	•WASHER -		9
	AN936A6B	•WASHER -		9
	AN341-6	•NUT -		9
	397-9	•COVER - ELECTRICAL TERMINAL BLOCK (HEN)	101-	1
- 5	AN3108B32-8S	•PLUG - (PORT SIDE)		1
	AN3108B32-8S	•PLUG - (STARBOARD SIDE)		1
	AN3057-20A	•ADAPTER - (PORT SIDE)		1
	AN3057-20A	•ADAPTER - (STARBOARD SIDE)		1
	2L7-2	•LUG - SAFETY (NAA) (PORT SIDE)		1
	2L7-2	•LUG - SAFETY (NAA) (STARBOARD SIDE)		1
- 6	AN742D6CB	•CLAMP - (PORT SIDE)		2
	AN515-8R7	•SCREW - (PORT SIDE)		2
	AN365-832	•NUT - (PORT SIDE)		2
- 7	AN3106M22-14S	•PLUG - (AS PER EO 05-5E-6A/227)		1
	AN3057-12A	•ADAPTER -		1
	10C1-2-4	•CONDUIT - (NAA)		1
		OR		
	S-1245-2-4	•CONDUIT - (CAN)		
	AN3106E18-4S	•PLUG -	274-	1
	TA710-23	•CLAMP - ELECTRICAL HARNESS (TAI)		1
	TA710-18	•CLAMP - ELECTRICAL HARNESS (TAI) (STARBOARD SIDE)	001-224	1
- 8	8C7B8-8	•COVER - (NAA) (PORT SIDE)	225-	1
- 9	8C7B6-16	•COVER - (NAA) (PORT SIDE)	225-	1
	TA710-14	•CLAMP - ELECTRICAL HARNESS (TAI) (PORT SIDE)	225-	1
	AN515-8R7	•SCREW -		3
	AN365-832	•NUT -		3
-10	BZ-7RQ1T	•SWITCH - SPDT PLUNGER (MSC) (CANOPY SEAL DUMP)		1
-11	8C4-3	•COVER - SWITCH PROTECTOR (NAA)		1
	AN515-6R16	•SCREW -		2
	AN365-632	•NUT -		2
	151-54426	•PLATE ASSY - INFLATABLE CANOPY SEAL EMY DUMP SWITCH		1
-12	AN742D5C	•CLAMP -	021-	1
	AN515-8R6	•SCREW -	021-	1
	AN365-832	•NUT -	021-	1
-13	295134-24B	•GROMMET - (MKM) (PLASTIC)		1
	295134-16C	•GROMMET - (MKM) (PLASTIC)		1

FIGURE AND INDEX NUMBER	GROUP ELECTRICAL EQUIPMENT MAJOR ASSEMBLY COCKPIT STARBOARD SIDE ELECTRICAL EQUIPMENT PART NUMBER	1234567 NOMENCLATURE	CODE	UNITS PER ASSY
158 -	295134-20A	•GROMMET - (MKM) (PLASTIC)		1
	295134-16A	•GROMMET - (MKM) (PLASTIC)		1
-14	172-54259	•BRACKET ASSY - ELECTRICAL BUS TIE-IN RELAY		1
	172-54259-3	••BRACKET - ELECTRICAL BUS TIE-IN RELAY		1
	AN931-6-10	••GROMMET -		2
	AN520-10R10	•SCREW -		1
	AN3-4A	•BOLT -	101-	2
	NAS43DD-3-6	•SPACER -		1
	AN365-1032	•NUT -		1
	AN3370-1	•RELAY - 200-AMP SPST UNSEALED (BUS TIE-IN)		1
-15	120-54229-800	•COVER ASSY - TYPE B-8 RELAY (AS PER EO 05-5E-6B/2)		1
	AN520-416R12	•SCREW -		2
	NAS43DD-4-20	•SPACER -		2
	2W1-13-28-40	•WASHER - PLAIN (NAA)		2
	AN935-416L	•WASHER -		2
	172-54020	•BUS-BAR - ELECTRICAL TIE-IN RELAY TO POWER		1
-16	151-54037-5	•TERMINAL - ELECTRICAL PRESSURIZED	001-490	2
	151-54037-105	•TERMINAL - ELECTRICAL PRESSURIZED	491-	2
	2W1P25-28-125	•WASHER - PLAIN (NAA)		2
	AN341-616	•NUT -		2
	AN781-3	•NIPPLE -		5
	AN960D616	•WASHER -		4
	AN364B624	•NUT -		4
-17	172-54042	•GUARD - ELECTRICAL FUS STA 110 BATTERY STUD STARBOARD SIDE		1
-18	TA710-10	•CLAMP - ELECTRICAL HARNESS (TAI)		4
	AN515-8R8	•SCREW -		4
	AN365-832	•NUT -		4
	TA710-18	•CLAMP - ELECTRICAL HARNESS (TAI)		1
	NAS43DD-3-52	•SPACER -		1
	AN520-10R24	•SCREW -		1
	AN365-1032	•NUT -		1
-19	AN3436-6-2	•TERMINAL BLOCK ASSY -	001-210	1
	AN515-6R8	•SCREW - (TERMINAL BLOCK ATTACHING)	001-210	2
	AN365-632	•NUT -	001-210	2
	AN961-416	•WASHER -	001-210	2
	AN936A416B	•WASHER -	001-210	2
	AN341-416	•NUT -	001-210	2
-20	140-54117-801	•SWITCH ASSY - POSITION INDICATOR & CONTROL (CANOPY CONTROL)		1
	BZ-3YST	••SWITCH - SPLIT-CONTACT BASIC (MSC) (CANOPY CONTROL)		1
	140-54117-3	••WIRE - BRASS •032 DIA X 5/8 SPEC QQ-W321 GRADE A		1
	10-15045	••BOOT - (MSC) (RUBBER DUST)		1
	AN515-6R32	•SCREW -		2
	AN936A4	•WASHER -		8
	159-48167	•INSULATOR - FUEL SELECTOR VALVE CONTROL MICROSWITCH (CANOPY CONTROL)	001-300	1
	159-48167	•INSULATOR - FUEL SELECTOR VALVE CONTROL MICROSWITCH (CANOPY CONTROL)	301-	2
	151-54426	•PLATE ASSY - INFLATABLE CANOPY SEAL EMY DUMP SWITCH		1
-21	AN742D16C	•CLAMP -		1
	TA710-14	•CLAMP - ELECTRICAL HARNESS (TAI)	001-300	2
	AN515-10R24	•SCREW -		1
	NAS43DD-3-48	•SPACER -		1
-22	10C1-3-6	•CONDUIT - (NAA)	001-455	1
		OR		
	S-1245-3-6	•CONDUIT - (CAN)	001-455	

FIGURE AND INDEX NUMBER	GROUP / MAJOR ASSEMBLY / PART NUMBER	ELECTRICAL EQUIPMENT / COCKPIT STARBOARD SIDE ELECTRICAL EQUIPMENT / 1234567 NOMENCLATURE	CODE	UNITS PER ASSY
158 -	AN515-8R10	•SCREW -	001-455	3
	AN960D8L	•WASHER -	301-455	3
	443-14-2-8AF	•CLIP - DUAL LINE SUPPORT (ADE)	456-	2
	AN515-8R8	•SCREW -	456-	2
-23	MS21919WDG10	•CLAMP - (AS PER EO 05-5E-6A/273 & 274)		2
	AN515-8R7	•SCREW -		2
	AN365-832	•NUT -		2
-24	237EAU	•RELAY - (LRC) (AS PER EO 05-5E-6A/274)	371-	1
	AN515-8R7	•SCREW -	371-	2
-25	AN742D10C	•CLAMP -		2
-26	443-14-2-8	•CLIP - DUAL LINE SUPPORT (ADE)		3
	AN520-10R7	•SCREW -		3
	AN960D10	•WASHER -		3
	AN365-1032	•NUT -		1
-27	10C1-3-8	•CONDUIT - (NAA)		1
		OR		
	S-1245-3-8	•CONDUIT - (CAN)	001-300	3
	AN515-8R6	•SCREW -	301-	3
	AN515-8R7	•SCREW -	301-	3
	AN960D8L	•WASHER -	301-	3
	AN365-832	•NUT -		1
-28	TA710-8	•CLAMP - ELECTRICAL HARNESS (TAI)		1
	AN515-8R10	•SCREW -		1
	AN365-832	•NUT -		1
-29	AN742D5C	•CLAMP -		1
	AN515-8R8	•SCREW -		1
	AN365-832	•NUT -		1
-30	AN742D5C	•CLAMP -		1
	AN515-8R8	•SCREW -		1
	AN365-832	•NUT -		1
-31	HC1560	•CAPACITOR - (MPR) (DRY ELECT• 6000-UF)		2
-32	AN742D30C	•CLAMP -		2
	NAS43DD-3-16	•SPACER -		2
	AN515-8R12	•SCREW -		2
	AN365-832	•NUT -		1
	AN781-2	•NIPPLE -		2
-33	AN3436-2-3	•TERMINAL BLOCK ASSY -		4
	AN515-4R8	•SCREW - (TERMINAL BLOCK ATTACHING)		4
	AN365-440	•NUT -		6
	AN961-6	•WASHER -		6
	AN936A6B	•WASHER -		6
	AN341-6	•NUT -		2
	397-3	•COVER - ELECTRICAL TERMINAL BLOCK (HEN) (AS PER EO 05-5E-6B/2)		1
-34	AN3100A20-27S	•RECEPTACLE -		3
	AN515-4R6	•SCREW -		3
	AN365-440	•NUT -		1
	AN3057-12A	•ADAPTER -		1
	AN742D5CB	•CLAMP -		1
	1J1-2-2-6	•JUMPER - WIRE (NAA)		1
	AN515-8R6	•SCREW -		1
	AN365-832	•NUT -		1
-35	270-8	•PLUG - (CED) (ELECTRICAL CONNECTOR) (STAND-BY COMPASS)		1
-36	AN742D4C	•CLAMP - (REMOVED ON AIRCRAFT 23001-23490 AS PER EO 05-5E-6A/65)	491-	1
	AN515-8R8	•SCREW - (REMOVED ON AIRCRAFT 23001-23490 AS PER EO 05-5E-6A/65)	491-	1

FIGURE AND INDEX NUMBER	GROUP ELECTRICAL EQUIPMENT MAJOR ASSEMBLY COCKPIT STARBOARD SIDE ELECTRICAL EQUIPMENT PART NUMBER	1234567 NOMENCLATURE	CODE	UNITS PER ASSY
158 -	AN365-832	•NUT - (REMOVED ON AIRCRAFT 23001-23490 AS PER EO 05-5E-6A/65)	491-	1
-37	AN3131-303	•LAMP - (SPARE)		1
	AN3121R313	•LAMP - (SPARE)		1
	AN3121-313	•LAMP - (SPARE)		5
	AN3140-327	•LAMP - (SPARE)		16
-38	1028-4	•BASE ASSY - (SOD)		1
	172-54086-2	•FLOOD-LIGHT ASSY - ELEC PRIMARY INSTRUMENT (STOW POSITION STARBOARD SIDE)		1
-39	AN659-1	••TERMINAL -		2
	172-54086-3	••WASHER - ELECTRICAL PRIMARY INSTRUMENT FLOOD-LIGHT		1
	172-54086-5	••WASHER - ELECTRICAL PRIMARY INSTRUMENT FLOOD-LIGHT		1
-40	172-54086-7	••CORD - ELECTRICAL PRIMARY INSTRUMENT FLOOD-LIGHT		1
-41	A-4902	••POST & BRACKET ASSY - (GMC) (INST LIGHT)		1
-42	A-4255A5	••LIGHT - INSTRUMENT RED (GMC)		1
-43	AN515-6R8	•SCREW - (BASE ATTACHING)		2
	AN960D6	•WASHER -		2
	AN365-632	•NUT -		2
	AN3131-303	•LAMP -		1
-44	AN3136R323	•LAMP - (SPARE)		3
-45	AN3034-3	•LIGHT ASSY - DIRECT INSTRUMENT		1
-46	TA710-5	•CLAMP - ELECTRICAL HARNESS (TAI)		1
	AN515-8R6	•SCREW -	001-300	1
	AN515-8R8	•SCREW -	301-	1
	AN365-832	•NUT -		1
-47	172-54090	•BASE - ELECTRICAL INSTRUMENT PANEL AUX RH FLOOD-LIGHT MTG		1
	AN507-1032R8	•SCREW - (BASE ATTACHING)		1
	AN365-1032	•NUT -		1
	1028-4	•BASE ASSY - (SOD) OR		1
	SA4335	•BASE - (SPI)		
	AN515-6R8	•SCREW - (BASE ATTACHING)		2
	AN365-632	•NUT -		2
	AN931-4-7	•GROMMET -		1
	AN3436-2-1	•TERMINAL BLOCK ASSY -		2
	AN515-4R8	•SCREW - (TERMINAL BLOCK ATTACHING)		2
	AN365-440	•NUT -		1
	AN961-6	•WASHER -		1
	AN936A6B	•WASHER -		1
	AN341-6	•NUT -		1
	397-1	•COVER - ELECTRICAL TERMINAL BLOCK (HEN)	101-	1
-48	172-54119	•PANEL - ELECTRICAL COCKPIT LIGHT RHEOSTAT		1
	AN530-8-8	•SCREW - (PANEL ATTACHING)		3
	31873A	•RHEOSTAT - (OMC)		1
	AN3155-25-100	•RHEOSTAT - AIRCRAFT POWER		1
	AN3155-50-100	•RHEOSTAT - AIRCRAFT POWER		1
-49	AN3211-2	•SWITCH - ROTARY SELECTOR (CAMERA SELECTOR)		1
	AN3220-2	•KNOB -		1
	2B2C3	•BUS-BAR - (NAA)		1
-50	YHS100S-6	•PANEL - PRESSURIZED DISCONNECT (BEC)	101-	1
	A3	•CLAMP - PANEL MOUNTING (BEC)		1
	161-54098-10	•INSULATOR - ELECTRICAL PRESS. DISC. TERM.		3
	161-54098	•INSULATOR - ELECTRICAL PRESS. DISC. TERM.		360
	130-51066	•GASKET - PRESSURIZED THERMOCOUPLE PANEL		40
	140-54108-3	•CLIP - PRESSURIZED ELEC DISCONNECT PANEL HOLD-DOWN		1
				1

FIGURE AND INDEX NUMBER	GROUP	ELECTRICAL EQUIPMENT	CODE	UNITS PER ASSY
	MAJOR ASSEMBLY	COCKPIT STARBOARD SIDE ELECTRICAL EQUIPMENT		
	PART NUMBER	1234567 NOMENCLATURE		
158 -	AN515-8R8	•SCREW -	001-100	11
	8-32NC3	•SCREW - (SPS) (SELF-LOCKING SOC/HD CAP)	101-	11
	152-54034	•COVER - ELECTRICAL PRESSURE DISC STA 114 (ALTER AS PER EO 05-5E-6A/275)		1
	AN960D6	•WASHER -		3
	AN515-6R7	•SCREW -		2
	AN500A6-7	•SCREW -		1
	172-54088-2	•SHIELD ASSY - ELECTRICAL PRESSURE DISC•		1
	AN507-632R8	•SCREW -		1
-51	B10F30	•RESISTOR - (CMC) OR		1
	PR-10-F	•RESISTOR - FIXED WIRE-WOUND (CMC) (30-OHM)		
	AN515-6R40	•SCREW -	001-300	1
	AN515-8R36	•SCREW -	301-	1
	2W1F12-18-62	•WASHER - PLAIN (NAA)		1
	AN960D616	•WASHER -	001-300	1
	AN960D8L	•WASHER -	301-	1
	AN365-832	•NUT -		1
-52	161-54057	•BRACKET ASSY - ELEC TERMINAL STRIP GUN-BAY	001-210	1
	161-54057-800	•BRACKET ASSY - ELEC TERMINAL STRIP GUN-BAY	211-	1
	AN515-8R7	•SCREW -		4
	NAS43C-3-12	•SPACER -		2
-53	AN3436-2-10	•TERMINAL BLOCK ASSY -	001-210	3
	AN3436-2-10	•TERMINAL BLOCK ASSY -	211-	2
	AN3436-2-2	•TERMINAL BLOCK ASSY -	211-	1
	AN515-4R6	•SCREW -	001-210	9
	AN515-4R6	•SCREW -	211-	8
	AN365-440	•NUT -	001-210	9
	AN365-440	•NUT -	211-	8
	AN961-6	•WASHER -	001-210	30
	AN961-6	•WASHER -	211-	22
	AN936A6B	•WASHER -	001-210	30
	AN936A6B	•WASHER -	211-	22
	AN341-6	•NUT -	001-210	30
	AN341-6	•NUT -	211-	22
	397-10	•COVER - ELECTRICAL TERMINAL BLOCK (HEN) (AS PER EO 05-5E-6B/2)	001-210	3
	397-10	•COVER - ELECTRICAL TERMINAL BLOCK (HEN)	211-	2
	397-2	•COVER - ELECTRICAL TERMINAL BLOCK (HEN)	211-	1
-54	13A-50001-800	•NAME-PLATE - ELECTRICAL RH CONSOLE CKT/BKR (AS PER EO 05-5E-6B/4)	001-370	1
	13A-50001-801	•NAME-PLATE - ELECTRICAL RH CONSOLE CKT/BKR OR	371-	1
	13A-50001-802	•NAME-PLATE - ELECTRICAL RH CONSOLE CKT/BKR	371-	
	2B1-10-2	•BUS-BAR - (NAA)	001-370	1
-55	AN3161-P10	•CIRCUIT-BREAKER - P/B NON-TRIP FREE		2
-56	AN3161-P5	•CIRCUIT-BREAKER - PUSH-BUTTON NON-TRIP FREE (AS PER EO 05-5E-6B/4 & 6A/273)	001-370	2
	AN3161-P5	•CIRCUIT-BREAKER - P/B NON-TRIP FREE	371-	1
-57	AN515-6R6	•SCREW - (AS PER EO 05-5E-6B/4 & 6A/273)		4
	AN515-6R10	•SCREW -		4
	AN365-632	•NUT - (AS PER EO 05-5E-6B/4)	001-300	1
	AN365-632	•NUT -	301-	2
	13A-50001-100	•PLATE - BLANKING (AS PER EO 05-5E-6A/273)	001-370	2
	AN515B6R6	•SCREW - (PLATE ATTACHING)	001-370	4
	AN960-6L	•WASHER -	001-370	4
	AN365-632	•NUT -	001-370	4
-58	NAS43DD-3-52	•SPACER -		1
	AN520-10R24	•SCREW -		1
	AN365-1032	•NUT -		1
		(CONTINUED SEE FIG• 175)		

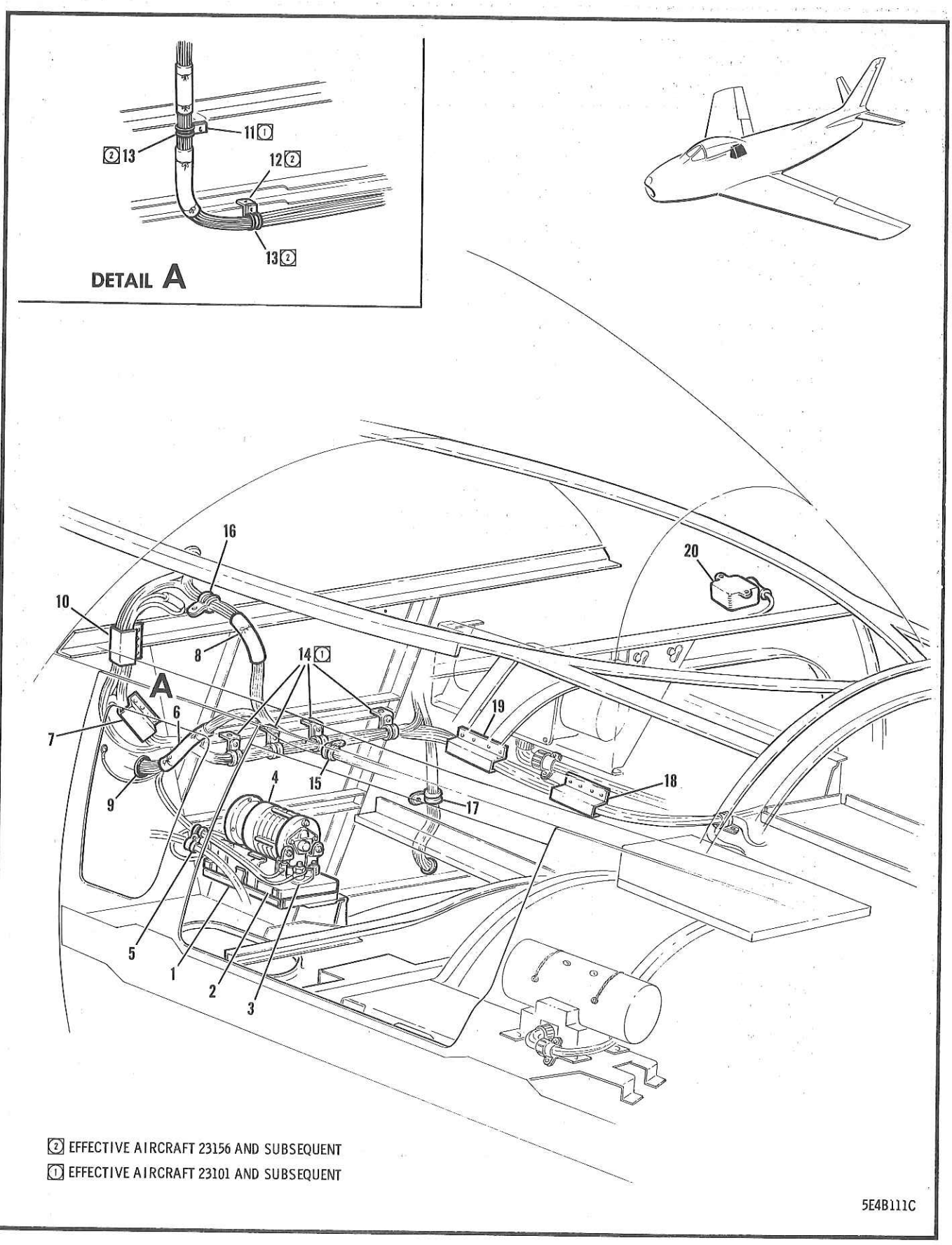

FIGURE 159 DECK STA 123-144 PORT SIDE ELECTRICAL EQUIPMENT

FIGURE AND INDEX NUMBER	GROUP ELECTRICAL EQUIPMENT MAJOR ASSEMBLY DECK STA 123-144 PORT SIDE ELECTRICAL EQUIPMENT PART NUMBER	1234567 NOMENCLATURE	CODE	UNITS PER ASSY
159 -	191-54231	ELECTRICAL EQUIPMENT INSTL - INTERMEDIATE FUSELAGE (SEE SECTION 3)		NP
- 1	151-54411-20	•SUPPORT ASSY - ELECTRICAL VOLTAGE RGLR		1
- 2	49-C-7573	•BASE ASSY - VOLTAGE REGULATOR (LEE) (LEECE-NEVILLE CO. 25431)		1
		OR		
	40-D-8445-2	•BASE ASSY - VOLTAGE REGULATOR (LEE)		1
- 3	151-54354	•INSULATOR - VOLTAGE REGULATOR JUMPER		4
	AN515-6R7	•SCREW -		4
	AN960D6	•WASHER -		2
	AN365-632	•NUT -		1
- 4	17R21	•REGULATOR - GENERATOR VOLTAGE (G.F.E.)		1
- 5	TA710-7	•CLAMP - ELECTRICAL HARNESS (TAI)		1
	TA710-4	•CLAMP - ELECTRICAL HARNESS (TAI)		1
	AN515-8R8	•SCREW -		2
	AN365-832	•NUT -		2
- 6	S-1245-2-4	•CONDUIT - (CAN)	001-100	1
	8C7B2-9	•CONDUIT - (NAA)	101-	1
◆	AN515-8R6	•SCREW -	001-100	2
	AN365-832	•NUT -	001-100	2
- 7	S-1245-2-4	•CONDUIT - (CAN)		1
	AN515-8R6	•SCREW -	001-370	2
	AN515-8R8	•SCREW -	371-	2
	AN960D8L	•WASHER -	371-	4
	AN365-832	•NUT -		2
- 8	S-1245-3-3	•CONDUIT - (CAN)	001-100	1
	8C7B-2-12	•CONDUIT - (NAA)	101-	1
	AN515-8R6	•SCREW -	001-100	2
	AN365-832	•NUT -	001-100	2
- 9	AN931-9-13	•GROMMET -		1
-10	S-1245-2-2	•CONDUIT - (CAN)		1
	AN515-8R8	•SCREW -		3
	AN960D8L	•WASHER -	371-	6
	AN365-832	•NUT -		3
-11	2C33	•CLIP - (NAA)	101-	1
	AN515-8R7	•SCREW -	101-	1
	AN365-832	•NUT -	101-	1
-12	2C33	•CLIP - (NAA)	156-	1
	AN515-8R7	•SCREW -	156-	1
-13	AN742D19C	•CLAMP -	156-	2
	AN515-8R8	•SCREW -	156-	2
	AN365-832	•NUT -	156-	3
-14	2C33	•CLIP - (NAA)	101-	4
	AN515-8R7	•SCREW -	101-	4
	AN365-832	•NUT -	101-	4
-15	TA710-DH20	•CLAMP - ELECTRICAL HARNESS (TAI)		2
-16	TA710-DH22	•CLAMP - ELECTRICAL HARNESS (TAI)		1
	TA710-DH16	•CLAMP - ELECTRICAL HARNESS (TAI)	001-100	5
	TA710-DH16	•CLAMP - ELECTRICAL HARNESS (TAI)	101-	6
-17	TA710-8	•CLAMP - ELECTRICAL HARNESS (TAI)		1
	AN515-8R8	•SCREW -	001-100	9
	AN515-8R8	•SCREW -	101-	10
	AN365-832	•NUT -	001-100	9
	AN365-832	•NUT -	101-	10
-18	S-1245-3-3	•CONDUIT - (CAN)		1
	AN515-8R6	•SCREW -	001-370	2
	AN515-8R8	•SCREW -	371-	2
	AN960D8L	•WASHER -	371-	4
	AN365-832	•NUT -		2
-19	S-1245-3-3	•CONDUIT - (CAN)		1

FIGURE AND INDEX NUMBER	GROUP ELECTRICAL EQUIPMENT MAJOR ASSEMBLY DECK STA 123-144 PORT SIDE ELECTRICAL EQUIPMENT PART NUMBER	1234567 NOMENCLATURE	CODE	UNITS PER ASSY
159 -	AN515-8R8	•SCREW -		2
	AN960D8L	•WASHER -		4
	AN365-832	•NUT -		2
-20	CA275X	•CAPACITOR - (SEC)		1
	AN515-8R6	•SCREW -		2
		(CONTINUED SEE FIG. 160)		

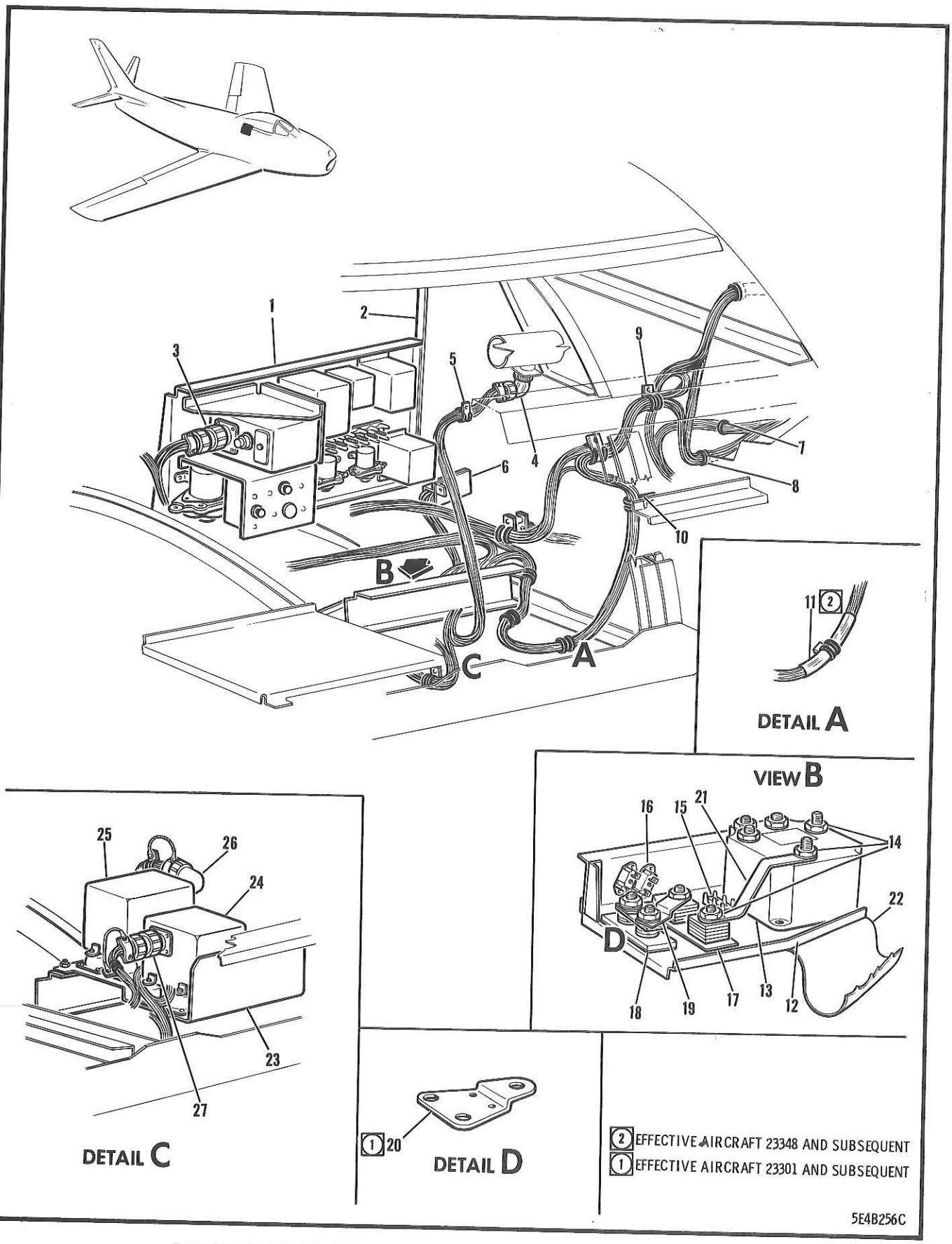

FIGURE 160 DECK STA 123-144 STARBOARD ELECTRICAL EQUIPMENT

FIGURE AND INDEX NUMBER	GROUP ELECTRICAL EQUIPMENT MAJOR ASSEMBLY DECK STA 123-144 STARBOARD ELECTRICAL EQUIPMENT PART NUMBER	1234567 NOMENCLATURE	CODE	UNITS PER ASSY
160 -	191-54231	ELECTRICAL EQUIP. INSTL - INTER FUSELAGE (SEE FIG. 159)		REF
- 1	151-54122-60	.PANEL ASSY - ELEC RELAY & CONTROL (COMPL) (SEE FIG. 185)		REF
- 2	151-54168	.BRACKET ASSY - RELAY PANEL		1
	AN520-10R7	.SCREW -		10
	AN960D10	.WASHER -		3
	AN365-1032	.NUT -		1
	AN781-1	.NIPPLE - (RELAY & CONTROL PANEL)		7
	AN781-2	.NIPPLE -		1
	AN781-3	.NIPPLE -		3
	AN961-416	.WASHER -	101-	2
	AN935-416	.WASHER -	101-	2
	AN341-416	.NUT -	101-	2
- 3	AN3106B24-7S	.PLUG - (FIELD CONTROL RELAY)		1
	AN3057-16A	.ADAPTER -		1
	2L7-2	.LUG - SAFETY (NAA)		1
- 4	AN3108B10SL3S	.PLUG - (COCKPIT AIR TEMP PICK-UP CONTROL)		1
	AN3057-4A	.ADAPTER -		1
	2L7-2	.LUG - SAFETY (NAA)		1
- 5	TA710-4	.CLAMP - ELECTRICAL HARNESS (TAI)		1
	AN515-8R8	.SCREW -		1
	AN365-832	.NUT -		1
- 6	S-1245-3-3	.CONDUIT - (CAN)		2
	AN515-8R8	.SCREW -	371-	4
	AN960D8L	.WASHER -		2
	AN365-832	.NUT -		1
- 7	295134-20A	.GROMMET - (MKM) (PLASTIC)		1
- 8	295134-24B	.GROMMET - (MKM) (PLASTIC)		1
- 9	TA710-DH22	.CLAMP - ELECTRICAL HARNESS (TAI)		2
	TA710-18	.CLAMP - ELECTRICAL HARNESS (TAI)		2
	AN515-8R8	.SCREW -		4
	AN365-832	.NUT -		4
-10	TA710-DH20	.CLAMP - ELECTRICAL HARNESS (TAI)		1
	TA710-18	.CLAMP - ELECTRICAL HARNESS (TAI)		3
-11	8C7B3-12	.COVER - (NAA)	348-	1
	AN515-8R8	.SCREW -		4
	AN365-832	.NUT -		4
-12	172-54048	.PANEL ASSY - REVERSE CURRENT RELAY & SHUNT	001-210	1
	172-54048-10	.PANEL ASSY - REVERSE CURRENT RELAY & SHUNT	211-	1
	AN515-6R7	.SCREW -		2
-13	AN3025-2	.CUT-OUT - (G.F.E.)		1
	AN520-10R8	.SCREW -	001-200	2
	AN520-10R12	.SCREW -	001-200	2
	AN3-3A	.BOLT -	201-	2
	AN73-5	.BOLT -	201-	2
	2W1AL14-14-16	.WASHER - PLAIN (NAA)	201-	4
	AN935B616L	.WASHER -		3
	AN961-616	.WASHER -		2
	AN961B616	.WASHER -	001-370	1
	AN961-616	.WASHER -	371-	1
-14	AN341-616	.NUT -		3
-15	AN3436-2-2	.TERMINAL BLOCK ASSY -		1
	AN515-4R6	.SCREW -		2
	AN365-440	.NUT -		2
	AN935-6L	.WASHER -		2
	AN960D6	.WASHER -		2
	AN341-6	.NUT -		2
-16	PSA-10	.CIRCUIT-BREAKER - AUTOMATIC RESET (STC)	001-210	1
	PSA-5	.CIRCUIT-BREAKER - AUTOMATIC RESET (STC)		1

FIGURE AND INDEX NUMBER	GROUP ELECTRICAL EQUIPMENT MAJOR ASSEMBLY DECK STA 123-144 STARBOARD ELECTRICAL EQUIPMENT PART NUMBER	1234567 NOMENCLATURE	CODE	UNITS PER ASSY
160 -	AN515-6R6	•SCREW -		4
	AN515-6R6	•SCREW -	001-210	2
-17	120814	•SHUNT - (WEI)	211-	1
	AN520-10R8	•SCREW -		2
-18	140-54035	•BUS ASSY - FUS STA 190 JUNCTION	001-300	1
	140-54035-800	•BUS ASSY - FUS STA 190 JUNCTION	301-	1
	140-54035-5	••INSULATOR - JUNCTION BUS-BAR		1
	140-54035-4	••BASE - JUNCTION BUS-BAR		1
	140-54035-3	••BUS - JUNCTION	001-300	1
	AN507B616R28	••SCREW -		2
	AN960-616	••WASHER -		4
	AN935-616	••WASHER -		4
	AN340-616	••NUT -		4
	AN509-8R12	•SCREW -		2
-19	140-54147-100	•BUS-BAR - SHUNT TO TERMINAL	001-300	2
-20	191-54158	•BUS-BAR - SHUNT TO TERMINAL	301-	1
	AN520B10R12	•SCREW -		2
	AN935B10	•WASHER -		2
	AN341-10	•NUT -		4
	AN961-10	•WASHER -		2
	AN936A10B	•WASHER -		2
-21	151-54129-100	•BUS-BAR - REVERSE CURRENT RELAY TO SHUNT		1
-22	172-54049-800	•COVER ASSY - REVERSE CURRENT RELAY (AS PER EO 05-5E-6B/2)		1
	AN515-6R6	•SCREW -		4
	AN960D8	•WASHER -		2
	AN960-6	•WASHER -		1
	AN365-832	•NUT -		4
	172-54045	•SUPPORT ASSY - WINDSHIELD ANTI-ICING & COCKPIT TEMP CONTROL AMPLIFIER	001-490	1
	172-54045-800	•SUPPORT ASSY - WINDSHIELD ANTI-ICING & COCKPIT TEMP CONTROL AMPLIFIER	491-	1
-23	172-54046	••SUPPORT - ANTI-ICING & CKPT TEMP CTL AMPL	001-490	1
	172-54046-800	••SUPPORT - ANTI-ICING & CKPT TEMP CTL AMPL	491-	1
-24	30058-14	••REGULATOR ASSY - TEMPERATURE (ARM) (COCKPIT)	001-370	1
	30058-29	••REGULATOR ASSY - TEMPERATURE (ARM) (COCKPIT)	371-	1
-25	30058-24	••REGULATOR ASSY - TEMPERATURE (ARM) (WINDSHIELD)	001-370	1
	30058-30	••REGULATOR ASSY - TEMPERATURE (ARM) (WINDSHIELD)	371-	1
	AN227-10	••STUD -		1
	AN365-832	••NUT -		1
	AN515-8R8	••SCREW -	001-370	28
	AN515-8R8	••SCREW -	371-	6
	AN509-8R7	••SCREW -	001-370	4
	AN509-8R7	••SCREW -	371-	2
	AN365-832	••NUT -	001-370	32
	AN365-832	••NUT -	371-	8
	AN520-10R8	•SCREW -		4
	AN520-10R10	•SCREW -		1
-26	AN3108B20-27SX	•PLUG - (WINDSHIELD ANTI-ICE CTL AMPLIFIER)		1
	AN3057-12A	•ADAPTER -		1
	TA710-4	•CLAMP - ELECTRICAL HARNESS (TAI)		1
	AN515-8R6	•SCREW -		1
	AN365-832	•NUT -		1
	1J1-2-2-3	•JUMPER - BONDING (NAA)		1
-27	AN3106B20-27S	•PLUG - (COCKPIT AIR TEMP CTL AMPLIFIER)		1
	AN3057-12A	•ADAPTER -		1

FIGURE AND INDEX NUMBER	GROUP ELECTRICAL EQUIPMENT MAJOR ASSEMBLY DECK STA 123-144 STARBOARD ELECTRICAL EQUIPMENT PART NUMBER	1234567 NOMENCLATURE	CODE	UNITS PER ASSY
160 -	1J1-2-2-3	•JUMPER - BONDING (NAA)		1
	TA710-4	•CLAMP - ELECTRICAL HARNESS (TAI)		1
	AN515-8R6	•SCREW -		1
	AN365-832	•NUT -		1
		(CONTINUED SEE FIG. 161)		

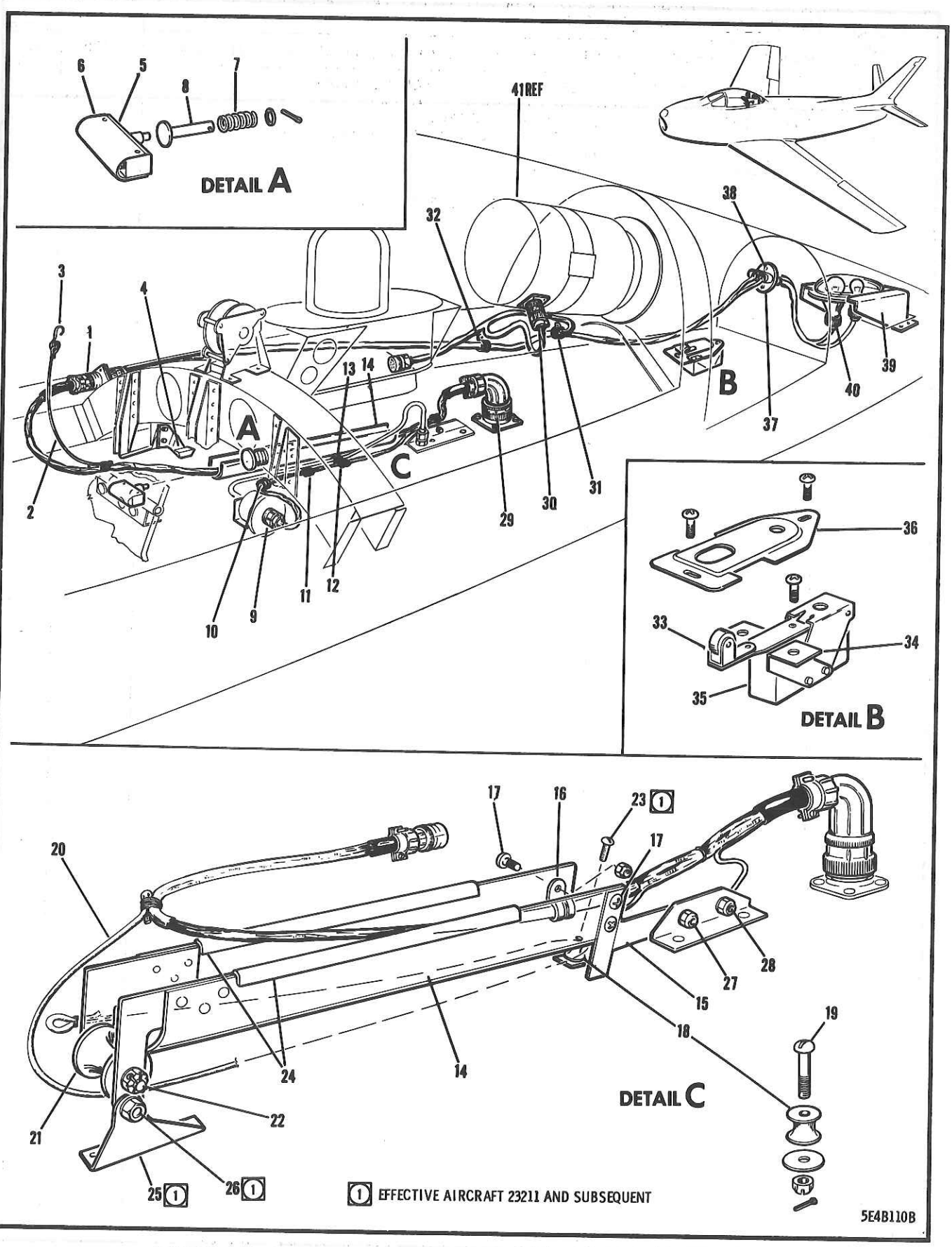

FIGURE 161 CANOPY & DECK INTERMEDIATE ELECTRICAL EQUIPMENT

FIGURE AND INDEX NUMBER	GROUP ELECTRICAL EQUIPMENT MAJOR ASSEMBLY CANOPY & DECK INTERMEDIATE ELECTRICAL EQUIPMENT PART NUMBER	1234567 NOMENCLATURE	CODE	UNITS PER ASSY
161 -	191-54231	ELECTRICAL EQUIP. INSTL - INTER FUSELAGE (SEE FIG. 159)		REF
	AN3057-12A	.ADAPTER -		1
	AN3100A20-29P	.RECEPTACLE -		1
	AN515-4R6	.SCREW -		4
	AN365-440	.NUT -		4
- 1	AN3107B20-29S	.PLUG -		1
	AN3057-12A	.ADAPTER -		1
	151-71093	.CORD ASSY - RADIO COMPASS LOOP CABLE SUP.	001-430	1
- 2	151-71093-3	..CORD - ELASTIC	001-430	1
- 3	151-71094	..HOOK - RADIO COMP LOOP WIRE BUNDLE SUP.	001-430	1
- 4	151-54087	.CAM - CANOPY OPEN LIMIT SWITCH		1
	AN515-6R8	.SCREW -		2
	AN960D6L	.WASHER -		2
	AN365-632	.NUT -		2
- 5	AN3215-1	.SWITCH - CLASS C LIMIT		1
- 6	8C4-3	.COVER - SWITCH PROTECTOR RED (NAA)		1
	AN515-6R16	.SCREW -		2
	AN960D6	.WASHER -		2
	AN365-632	.NUT -		2
- 7	161-54094	.SPRING - CANOPY CLOSED LIMIT SWITCH		1
- 8	161-54093	.PIN - CANOPY CLOSED LIMIT SWITCH		1
	AN960C10L	.WASHER -		1
	AN380-2-2	.PIN -		1
- 9	AN3106B18-10S	.PLUG - (CANOPY HEAT CONTROL SWITCH)	001-210	1
	AN3057-10A	.ADAPTER -	001-210	1
	2L7-2	.LUG - SAFETY (NAA)	001-210	1
-10	AN742D5C	.CLAMP -	001-210	1
	AN515-8R6	.SCREW -	001-210	1
	AN365-832	.NUT -	001-210	1
-11	TA710-4	.CLAMP - ELECTRICAL HARNESS (TAI)		1
	AN520-10R8	.SCREW -		1
	AN960D10	.WASHER -		1
	AN365-1032	.NUT -		1
-12	TA710-10	.CLAMP - ELECTRICAL HARNESS (TAI)		1
	AN515-8R8	.SCREW -		1
	AN365-832	.NUT -		1
-13	TA710-4	.CLAMP - ELECTRICAL HARNESS (TAI)		1
	AN515-8R8	.SCREW -		1
	AN365-832	.NUT -		1
	13A-53017	.GUIDE ASSY - CANOPY DECK PULL-AWAY COMPASS CABLE (AS PER EO 05-5E-6A/89)	001-210	1
	13A-53017-10	.GUIDE ASSY - CANOPY DECK PULL-AWAY COMPASS CABLE (AS PER EO 05-5E-6A/89)	211-	1
-14	13A-53017-5	..CHANNEL - PULL-AWAY RADIO COMPASS CABLE		1
-15	13A-53017-3	..SUPPORT - PULL-AWAY RADIO COMPASS CABLE		1
	13A-53017-9	..HOLDER - PULL-AWAY RADIO COMPASS CABLE		1
	13A-53017-7	..HOLDER - PULL-AWAY RADIO COMPASS CABLE	001-210	1
	13A-53017-11	..HOLDER - PULL-AWAY RADIO COMPASS CABLE	211-	1
	AN520-10R30	..SCREW - (AS PER EO 05-5E-6A/203)		1
	NAS43DD3-84	..SPACER - (AS PER EO 05-5E-6A/203)		1
	AN960-10L	..WASHER - (AS PER EO 05-5E-6A/203)		1
	AN365-1032	..NUT - (AS PER EO 05-5E-6A/203)		1
-16	MS21919DG8	..CLAMP - AIRCRAFT LOOP TYPE SUP. CUSHIONED		1
-17	AN515-8R8	..SCREW -		3
	AN365-832	..NUT -		3
	MS21919WDG2	..CLAMP - (AS PER EO 05-5E-6A/252)		1
	AN515-8R7	..SCREW -		1
	AN365-832	..NUT -		1
-18	13A-53020	..PULLEY - QUICK DISCONNECT CANOPY GUIDE		1
-19	AN22-14	..BOLT -		1
	AN960D10	..WASHER -		1
	AN320-2	..NUT -		1

FIGURE AND INDEX NUMBER	GROUP ELECTRICAL EQUIPMENT MAJOR ASSEMBLY CANOPY & DECK INTERMEDIATE ELECTRICAL EQUIPMENT PART NUMBER	1234567 NOMENCLATURE	CODE	UNITS PER ASSY
161 -	AN380-2-2	••PIN -		1
-20	13A-53022	••BUNGEE - CANOPY QUICK DISC. CABLE SUPPORT		1
-21	13A-53019	••PULLEY - CANOPY GUIDE QUICK DISCONNECT		1
-22	AN23-31	••BOLT -		1
	13A-53021	••WASHER - CANOPY GUIDE		2
	NAS43DD-3-16	••SPACER -		1
	AN960D10	••WASHER -		2
	AN320-3	••NUT -		1
	AN380-3-2	••PIN -		1
-23	AN520-10R8	•SCREW -	211-430	2
	AN960-10L	•WASHER -	431-	4
	2W1R12-18-64	•WASHER - PLAIN (NAA)	211-430	2
	AN365-1032	•NUT -	211-430	2
-24	9E1-8-8	•EXTRUSION - PLASTIC (NAA) (AS PER EO 05-5E-6A/89)		2
-25	13A-53018-10	•BRACKET - CANOPY GUIDE SUPPORT	211-430	1
	13A-53018	•BRACKET - CANOPY GUIDE SUPPORT	431-	1
	AN3-3A	•BOLT -	431-	2
	AN960D4	•WASHER - (AS PER EO 05-5E-6A/89)	211-430	4
	2W1SR32-24-40	•WASHER - PLAIN (NAA)	431-	2
-26	AN515-8R7	•SCREW - (AS PER EO 05-5E-6A/89)	211-	1
	AN960-8L	•WASHER -	211-	1
	AN365-832	•NUT -	211-	1
-27	AN515-8R7	•SCREW - (AS PER EO 05-5E-6A/89)		1
	AN960-8L	•WASHER -		1
	AN365-832	•NUT -		1
-28	AN515-8R8	•SCREW - (AS PER EO 05-5E-6A/89)		1
	2W18-8L	•WASHER - PLAIN (NAA)		1
	AN365-832	•NUT -		1
-29	AN3108B20-29S	•PLUG -		1
	AN3057-12A	•ADAPTER -		1
-30	AN3106B10SL4S	•PLUG -		1
		•PLUG - (COCKPIT PRESSURE REGULATOR)		1
-31	TA710-4	•CLAMP - ELECTRICAL HARNESS (TAI)		1
-32	TA710-6	•CLAMP - ELECTRICAL HARNESS (TAI)		1
	AN515-8R8	•SCREW -		2
	AN365-832	•NUT -		3
-33	AN3169-1	•ACTUATOR - LIMIT SWITCH CLASS D		3
	151-54084	•BRACKET - CANOPY OPEN LIMIT SWITCH INBOARD	001-370	1
-34	151-54085	•BRACKET - CANOPY OPEN LIMIT SWITCH OUTBD	001-370	1
	176-54085	•BRACKET - CANOPY OPEN LIMIT SWITCH OUTBD	371-	1
-35	AN3210-1	•SWITCH - LOW TRAVEL LIMIT (CANOPY OPEN)		1
	AN515-6R8	•SCREW -	001-370	4
	AN960D6L	•WASHER -	001-370	4
	AN515-6R8	•SCREW -	371-	2
	AN960D6L	•WASHER -	371-	2
	AN515-6R16	•SCREW -	371-	2
	AN936A6B	•WASHER -	371-	2
	AN341-6	•NUT -	371-	2
-36	151-54086	•COVER - CANOPY OPEN LIMIT SWITCH	001-370	1
	151-54086-800	•COVER - CANOPY OPEN LIMIT SWITCH	371-	1
-37	140-54008	•PANEL ASSY - ELECTRICAL CONNECTOR PRESSURE	001-370	1
	140-54008-3	••DISC - PLASTIC	001-210	1
	AN515PB6R20	••SCREW -	001-210	2
	2W1SR9-10-0312	••WASHER - PLAIN (NAA)	001-210	2
	AN935B6L	••WASHER -	001-210	2
	2W1AL9-10-032	••WASHER - PLAIN (NAA)	001-210	4
	AN341-6	••NUT -	001-210	2
-38	AN515-6R9	•SCREW -	001-210	2
	AN960D6L	•WASHER -	001-210	4

FIGURE AND INDEX NUMBER	GROUP ELECTRICAL EQUIPMENT MAJOR ASSEMBLY CANOPY & DECK INTERMEDIATE ELECTRICAL EQUIPMENT PART NUMBER	1234567 NOMENCLATURE	CODE	UNITS PER ASSY
161 -	AN365-632	•NUT -	001-210	2
-39	151-54009	•SUPPORT - FUSELAGE POSITION LIGHT UPPER	001-210	1
	AN515-8R8	•SCREW -	001-210	5
	AN365-832	•NUT -	001-210	5
-40	AN3177-9	•LIGHT ASSY - UPPER & LOWER FUSELAGE (TWO LAMPS)	001-210	1
	AN3099-7	•COVER -	001-210	1
	AN3131-303	•LAMP -	001-210	1
	AN3133-311	•LAMP -	001-210	1
	AN515-6R5	•SCREW -	001-210	5
	2W1P8-18-32	•WASHER - PLAIN (NAA)	001-210	2
	AN365-632	•NUT -	001-210	5
-41	102052-6	REGULATOR ASSY - AIR PRESS. (SEE SECT. 14)		REF
		(CONTINUED SEE FIG. 162)		

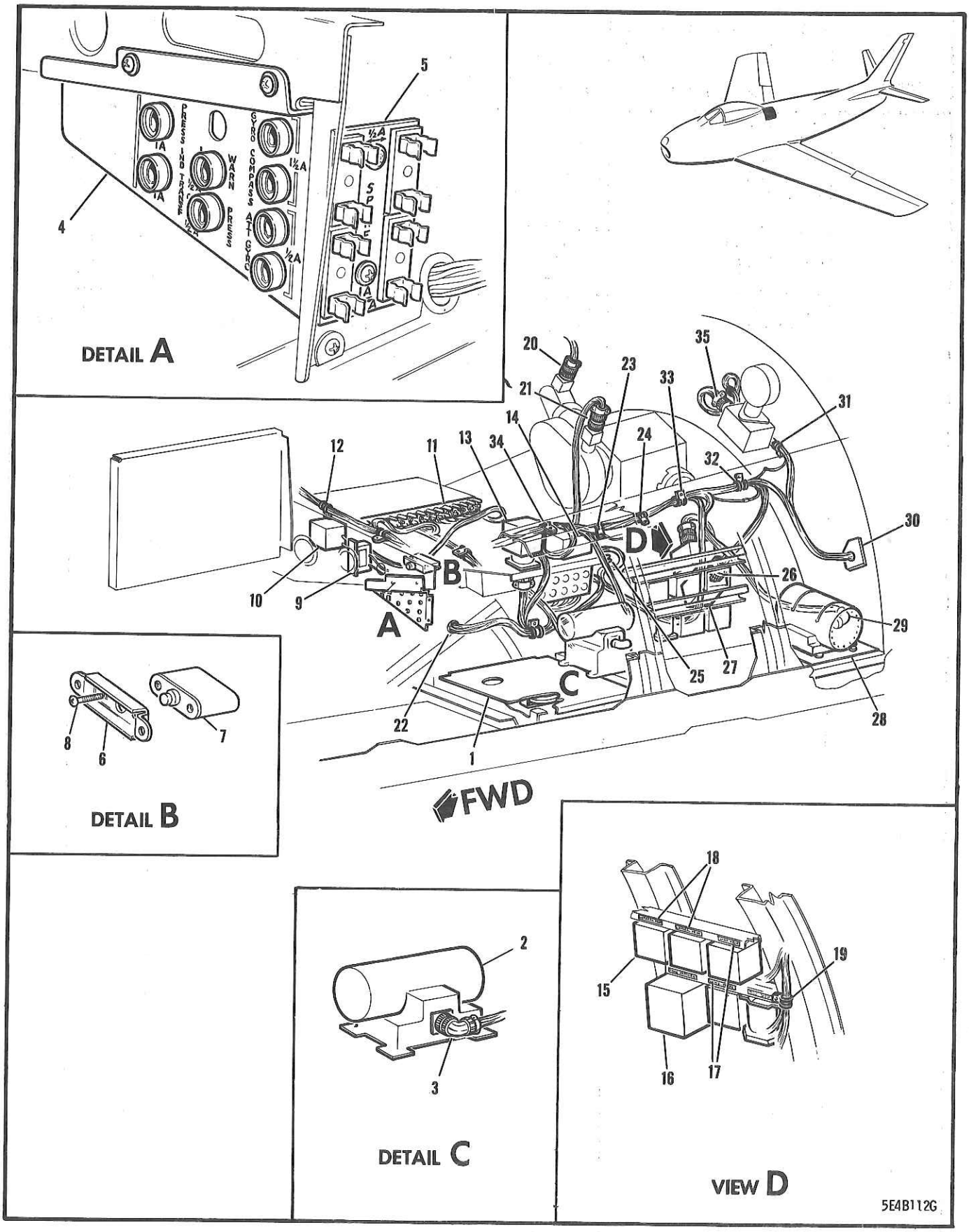

FIGURE 162 RADIO-BAY PORT SIDE ELECTRICAL EQUIPMENT

FIGURE AND INDEX NUMBER	GROUP ELECTRICAL EQUIPMENT MAJOR ASSEMBLY RADIO-BAY PORT SIDE ELECTRICAL EQUIPMENT		CODE	UNITS PER ASSY
	PART NUMBER	1234567 NOMENCLATURE		
162 -	191-54231	ELECTRICAL EQUIP. INSTL - INTER FUSELAGE (SEE FIG. 159)		REF
- 1	170-54071	•CLUSTER ASSY - WING CONTROL FLAP PULLEY & SWITCH (SEE FIG. 186)		REF
- 2	AN3499-1	•INVERTER - 100-VOLT-AMPERE 3-PHASE INSTRUMENT (G.F.E.)		1
		OR		
	AN3499	•INVERTER - 100-VOLT-AMPERE 3-PHASE INSTRUMENT (G.F.E.)		
		OR		
	X3499-1	•INVERTER - (G.F.E.)		
- 3	AN3108B14S7S	•PLUG -		1
	AN3057-6	•ADAPTER -		1
	2W1AL12-20-64	•WASHER - PLAIN (NAA)		4
	AN515-8R12	•SCREW -		2
	AN515-8R14	•SCREW -		2
	4S3D10-4	•SPACER - BOLT (NAA)		2
	8C7B3S4	•COVER - (NAA)	201-	1
	8C7B2-4	•COVER - (NAA)	201-	1
	13-51055	•DECAL - INVERTER WARNING LIGHT CIRCUIT FUSE (AS PER EO 05-5E-6A/34)	001-210	1
- 4	170-54048-802	•BRACKET ASSY - REAR RADIO COMPARTMENT FUSE (AS PER EO 05-5E-6A/154)		1
- 5	13B-50028	•MOUNTING ASSY - RADIO COMPT SPARE FUSE (AS PER EO 05-5E-6A/154)		1
	13B-50027	••BRACKET - RADIO COMPARTMENT SPARE FUSE HOLDER MOUNTING		1
	4574	••HOLDER - SPARE FUSE (BUS)		4
		OR		
	4111	••HOLDER - (LTF) (SPARE FUSE)		
		OR		
	350056	••HOLDER - (LTF) (SPARE FUSE)		
	AN520-10R7	•SCREW - (AS PER EO 05-5E-6A/154)		2
	AN520-10R9	•SCREW - (AS PER EO 05-5E-6A/154)		2
	HKP	•HOLDER - PANEL MOUNTED FUSE (BUS) (AS PER EO 05-5E-6A/154)		8
	AGC-1/2	•FUSE - GLASS TUBE (BUS) (AS PER EO 05-5E-6A/154)		6
	AGC-1	•FUSE - GLASS TUBE (BUS)		3
	AGC-1-1/2	•FUSE - GLASS TUBE (BUS)		4
- 6	13B-53018	•BRACKET - BUNGEE CIRCUIT-BREAKER (AS PER EO 05-5E-6A/193)		1
- 7	AN3161-P5	•CIRCUIT-BREAKER - PUSH-BUTTON NON-TRIP FREE (AS PER EO 05-5E-6A/193)		1
- 8	AN515-6R8	•SCREW - (AS PER EO 05-5E-6A/193)		4
	AN960D632	•WASHER -		2
	AN960-6	•WASHER - (AS PER EO 05-5E-6A/193)		2
	AN365-632	•NUT - (AS PER EO 05-5E-6A/193)		2
- 9	C124	•TRANSFORMER - (FEC)		1
	AN520-10R10	•SCREW -		2
	NAS43DD3-16	•SPACER -		2
	AN365-1032	•NUT -		2
-10	32439A	•RELAY - (GEM) (TYPE B-9A 15-AMP SPST)	001-210	1
	AN931-6-10	•GROMMET -	001-210	1
	NAS43DD1-8	•SPACER -	001-100	3
	NAS43DD1-10	•SPACER -	101-210	3
	AN935-6L	•WASHER -	001-210	3
	AN515-6R5	•SCREW -	001-100	3
	AN515-6R8	•SCREW -	101-210	3
-11	AN3436-2-9	•TERMINAL BLOCK ASSY -		2

FIGURE AND INDEX NUMBER	GROUP ELECTRICAL EQUIPMENT MAJOR ASSEMBLY RADIO-BAY PORT SIDE ELECTRICAL EQUIPMENT PART NUMBER	1234567 NOMENCLATURE	CODE	UNITS PER ASSY
162 -	AN515-4R6	•SCREW -		4
	AN365-440	•NUT -		4
	AN3433-2-2	•BUS-BAR -		1
	AN3433-2-3	•BUS-BAR -		1
	AN960D6	•WASHER -		18
	AN935-6L	•WASHER -		18
	AN341-6	•NUT -		18
	397-9	•COVER - ELECTRICAL TERMINAL BLOCK (HEN)	201-	2
-12	TA710-4	•CLAMP - ELECTRICAL HARNESS (TAI)		1
	TA710-8	•CLAMP - ELECTRICAL HARNESS (TAI)		1
	AN515-8R8	•SCREW -		2
	AN365-832	•NUT -		2
-13	AN3308-1	•RELAY - 10-AMP 3PDT SEALED CONNECTOR MTG		1
	AN3100A20-33S	•RECEPTACLE -		1
	AN3057-12A	•ADAPTER -		1
	2L7-2	•LUG - SAFETY (NAA)		1
	AN515-4R6	•SCREW -		4
	AN365-440	•NUT -		4
-14	32471	•RELAY - INSTRUMENT INVERTER OFF TYPE D1 (G•F•E•)		1
		OR		
	44B18574	•RELAY - (G•F•E•)		
	AN520-10R8	•SCREW -		2
-15	172-54161	•BANK ASSY - REAR RADIO-BAY RELAY		1
	172-54162	••ANGLE ASSY - REAR RADIO-BAY RELAY SUPPORT		1
	237-EAU	••RELAY ASSY - 10-AMP RES 29-VDC (LRC)		3
	AN515-8R8	••SCREW -		2
	AN515-8R7	••SCREW -		2
	AN365-832	••NUT -		4
	AN515-8R7	•SCREW -		3
-16	172-54161-30	•BANK ASSY - REAR RADIO-BAY RELAY		1
	172-54162	••ANGLE ASSY - REAR RADIO-BAY RELAY SUPPORT		1
	237-EAU	••RELAY ASSY - 10-AMP RES 29-VDC (LRC)		1
	AN515-8R6	••SCREW -		2
	AN365-832	••NUT -		2
	AN515-8R8	•SCREW -		1
	AN515-8R7	•SCREW -		2
-17	176-54128-5	•DECALCOMANIA - RELAY IDENTIFICATION		2
-18	176-54128-3	•DECALCOMANIA - RELAY IDENTIFICATION		2
-19	TA710-8	•CLAMP - ELECTRICAL HARNESS (TAI)		1
	AN515-8R8	•SCREW -		1
	AN365-832	•NUT -		1
-20	AN3106B14S5S	•PLUG - (COCKPIT AIR SHUT-OFF VALVE)	001-370	1
	AN3108B14S5S	•PLUG - (COCKPIT AIR SHUT-OFF VALVE)	371-	1
	AN3057-6A	•ADAPTER -		1
-21	AN3106B10SL3S	•PLUG - (WINDSHIELD AIR TEMP PICK-UP CTL)		1
	AN3057-4A	•ADAPTER -		1
-22	AN931-10-14	•GROMMET -		1
	TA710-8	•CLAMP - ELECTRICAL HARNESS (TAI)		1
	AN515-8R8	•SCREW -		1
	AN365-832	•NUT -		1
-23	AN742D6CB	•CLAMP -		1
-24	AN742D5CB	•CLAMP -		1
	1J1-2-2-10	•JUMPER - WIRE (NAA)		2
	AN515-8R6	•SCREW -		2
	AN365-832	•NUT -		2
-25	AN3436-4-2	•TERMINAL BLOCK ASSY -	001-100	1
	AN961-10	•WASHER -	001-100	2
	AN936A10B	•WASHER -	001-100	2
	AN341-10	•NUT -	001-100	2

FIGURE AND INDEX NUMBER	GROUP ELECTRICAL EQUIPMENT MAJOR ASSEMBLY RADIO-BAY PORT SIDE ELECTRICAL EQUIPMENT PART NUMBER	1234567 NOMENCLATURE	CODE	UNITS PER ASSY
162 -26	AN3106B14S5S	•PLUG - (AMO HEAT FILTER)	001-210	1
	AN3057-6A	•ADAPTER -	001-210	1
-27	C330-LA	•CAPACITOR - (POT) (RADIO NOISE FILTER)	001-210	1
	AN515-6R8	•SCREW -	001-210	4
	8C7B10-5	•COVER - (NAA)	201-	1
-28	172-54093	•MOUNTING ASSY - INVERTER		1
	172-54094	••PLATE - INVERTER MOUNTING		1
	AN3499-1	••INVERTER - 100-VOLT-AMPERE 3-PHASE INSTRUMENT (G•F•E•)		1
		OR		
	AN3499	••INVERTER - 100-VOLT-AMPERE 3-PHASE INSTRUMENT (G•F•E•)		1
	AN515-8R10	••SCREW -		4
	AN960D8L	••WASHER -		4
	AN365-832	••NUT -		4
-29	AN3108B14S7S	•PLUG - (INVERTER)		1
	AN3057-6A	•ADAPTER -		1
	2L7-2	•LUG - SAFETY (NAA)		1
	AN960D10L	•WASHER -		2
	AN3-3A	•BOLT -		2
-30	172-54244	•DOUBLER - ELECTRICAL WIRING THROUGH BULKHEAD FUSELAGE STA 178		1
	172-54245	•SPACER - ELECTRICAL WIRING THROUGH BULKHEAD FUSELAGE STA 178		1
	295134-20A	•GROMMET - (MKM) (PLASTIC)		1
	AN515-4R8	•SCREW -		4
-31	TA710-6	•CLAMP - ELECTRICAL HARNESS (TAI)		2
	AN515-8R8	•SCREW -		2
	AN365-832	•NUT -		2
-32	TA710-DH20	•CLAMP - ELECTRICAL HARNESS (TAI)		1
	NAS43-3-88	•SPACER -		1
	AN515-8R30	•SCREW -	001-370	1
	AN515-8R32	•SCREW -	371-	1
	AN365-832	•NUT -		1
-33	TA710-DH21	•CLAMP - ELECTRICAL HARNESS (TAI)		1
-34	TA710-DH20	•CLAMP - ELECTRICAL HARNESS (TAI)		1
	AN515-8R10	•SCREW -		2
	AN365-832	•NUT -		2
-35	AN3106B14S5S	•PLUG -		1
	AN3057-6A	•ADAPTER -		1
	8C7B10-21	•COVER - (NAA)	201-	1
		(CONTINUED SEE FIG. 163)		

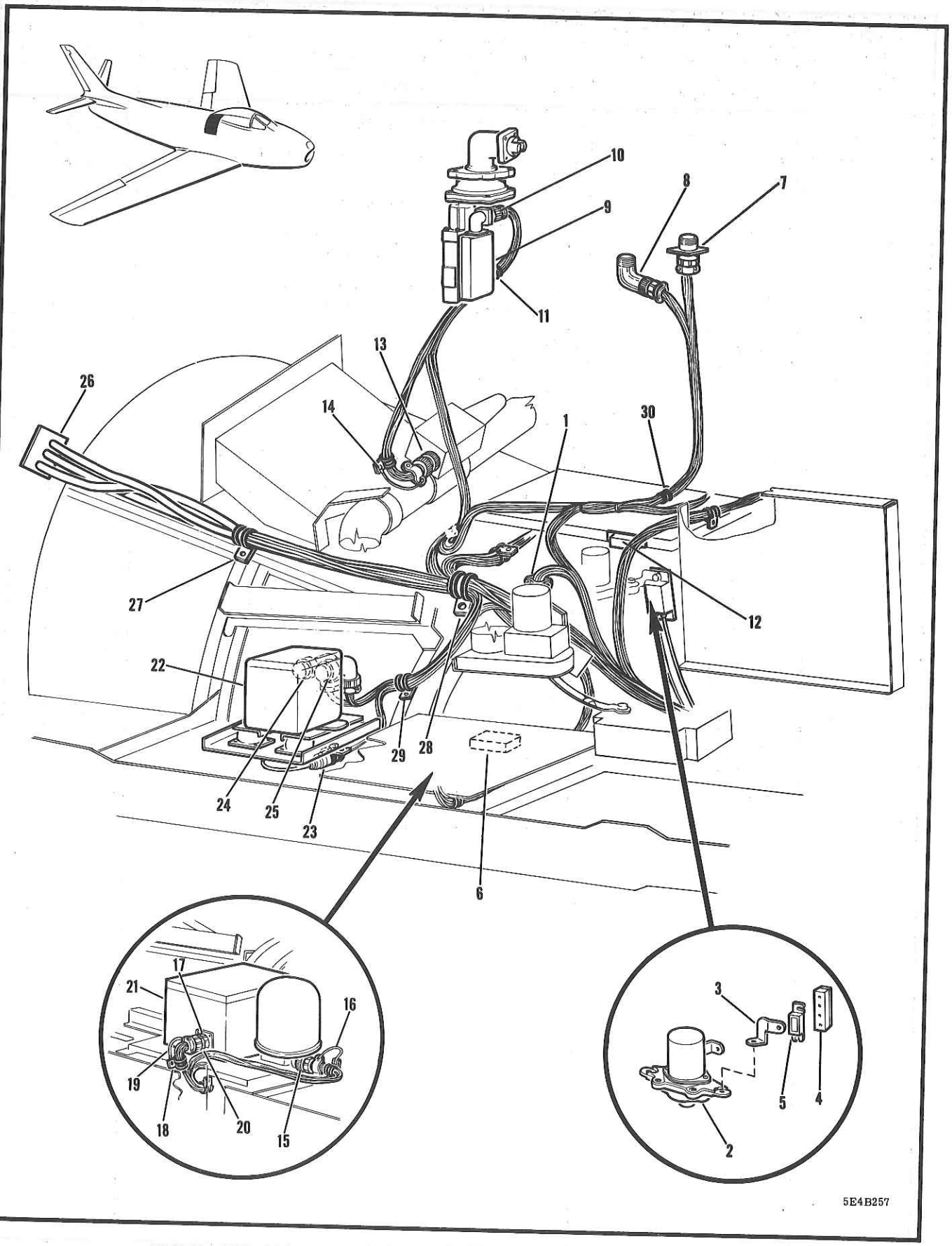

FIGURE 163 RADIO-BAY STARBOARD SIDE ELECTRICAL EQUIPMENT

FIGURE AND INDEX NUMBER	GROUP ELECTRICAL EQUIPMENT MAJOR ASSEMBLY RADIO-BAY STARBOARD SIDE ELECTRICAL EQUIPMENT PART NUMBER	1234567 NOMENCLATURE	CODE	UNITS PER ASSY
163 -	191-54231	ELECTRICAL EQUIP. INSTL - INTER FUSELAGE (SEE FIG. 159)		REF
				1
- 1	AN3106B14S5S	•PLUG -	001-370	1
	AN3057-6A	•ADAPTER -	371-	1
	AN3057-6	•ADAPTER -		1
	2L7-2	•LUG - SAFETY (NAA)	001-210	1
- 2	AN3370-1	•RELAY - 200-AMP SPDT UNSEALED (CABIN HEATER POWER)		
			001-210	1
	AN781-2	•NIPPLE -	001-210	2
	AN4-4A	•BOLT -	001-210	1
- 3	151-54179	•BUS - CABIN HEATER POWER	001-210	1
- 4	FSH	•MOUNTING - LIMITER (BEC)	001-210	1
- 5	FLLE	•LIMITER - 150-AMPERE (BEC)	001-210	1
	AN781-2	•NIPPLE -	001-370	1
- 6	CA275X	•CAPACITOR - (SEC)	001-370	2
	AN515-8R6	•SCREW -	001-370	2
	AN365-832	•NUT -		1
	S-1245-2-2	•CONDUIT - (CAN)		1
	S-1245-2-6	•CONDUIT - (CAN)	001-370	4
	AN515-8R6	•SCREW -	371-	4
	AN515-8R8	•SCREW -	371-	8
	AN960D8L	•WASHER -		4
	AN365-832	•NUT -		1
- 7	AN3106B20-29P	•RECEPTACLE - (AS PER EO 05-5E-6A/5)		1
	TBF-20-29PS	•RECEPTACLE - THRU-BULKHEAD FITTING (CED) (AS PER EO 05-5E-6A/5)		
				1
	AN3057-12A	•ADAPTER -		1
	4G3-20	•GASKET - PRESSURE PLUG (NAA)		4
	AN515-4R6	•SCREW -		4
	AN365-440	•NUT -		1
	2L7-2	•LUG - SAFETY (NAA) (AS PER EO 05-5E-6A/5)	001-094	1
- 8	AN3108B10SL4S	•PLUG - (CKPT DUMP VALVE)	001-490	1
	AN3106B10SL4S	•PLUG - (CKPT DUMP VALVE)	491-	1
	AN3057-4A	•ADAPTER -		1
- 9	151-54176-10	•ACTUATOR ASSY - PILOT CANOPY		1
	D-380-1	••ACTUATOR - (HCO)		1
	151-54352-10	••COUPLING - CANOPY ACTUATOR		1
	151-54353-3	••PIN - CANOPY ACTUATOR COUPLING		1
	151-54098	•SHIM - FUSELAGE CANOPY ACTUATING MOTOR		AR
	2W1-16-20-64	•WASHER - PLAIN (NAA)		4
	AN4H5A	•BOLT -		4
-10	AN3106B14S7S	•PLUG -		1
	AN3057-6A	•ADAPTER -		1
	2L7-2	•LUG - SAFETY (NAA)		1
-11	TA710-6	•CLAMP - ELECTRICAL HARNESS (TAI)		1
	TA710-8	•CLAMP - ELECTRICAL HARNESS (TAI)		1
	AN515-8R8	•SCREW -		2
	AN365-832	•NUT -		2
-12	FLLE	•LIMITER - 150-AMPERE (BEC)	001-210	1
	AN960D516L	•WASHER -	001-210	2
	NAS43DD-5-20	•SPACER -	001-210	2
	AN5-7	•BOLT -	001-210	2
-13	AN3106B14S5S	•PLUG -		1
	AN3057-6A	•ADAPTER -		1
	AN742D5CB	•CLAMP -		1
-14	1J1-2-2-3	•JUMPER - WIRE (NAA)		1
	AN515-8R6	•SCREW -		1
	AN365-832	•NUT -		1
-15	AN3106B20-29S	•PLUG -		1
	AN3057-12A	•ADAPTER -		

FIGURE AND INDEX NUMBER	GROUP ELECTRICAL EQUIPMENT MAJOR ASSEMBLY RADIO-BAY STARBOARD SIDE ELECTRICAL EQUIPMENT PART NUMBER	1234567 NOMENCLATURE	CODE	UNITS PER ASSY
163 -	2L7-2	•LUG - SAFETY (NAA)		1
	755-2-2-6	•CLIP - INTEGRALLY BONDED SUPPORT (ADE)		1
	755-3-2-6	•CLIP - INTEGRALLY BONDED SUPPORT (ADE)		3
	755-4-2-6	•CLIP - INTEGRALLY BONDED SUPPORT (ADE)		1
	755-5-2-6	•CLIP - INTEGRALLY BONDED SUPPORT (ADE)		1
-16	1J1-2-2-3	•JUMPER - WIRE (NAA)		1
	AN515-8R6	•SCREW -		5
	AN515-8R8	•SCREW -		1
	AN365-832	•NUT -		6
-17	AN3106B20-27S	•PLUG -		1
	2L7-2	•LUG - SAFETY (NAA)		1
-18	755-3-2-6	•CLIP - INTEGRALLY BONDED SUPPORT (ADE)		1
-19	1J1-2-2-3	•JUMPER - WIRE (NAA)		1
	AN515-8R8	•SCREW -		1
	2W1SR28-36-93	•WASHER - PLAIN (NAA)		1
	2W1C52-36-16	•WASHER - PLAIN (NAA)		2
	AN365-832	•NUT -		1
-20	AN3054-12	•NUT -		1
	AN515-8R8	•SCREW -		1
	AN365-832	•NUT -		1
-21	RW30J2R0	•RESISTOR - TAB TERMINAL TYPE (WLE)		1
	AN520-10R6	•SCREW -		1
	AN960D10	•WASHER -		2
	2W1P14-20-62	•WASHER -		2
	AN365-1032	•NUT -		1
-22	161-54116-20	•PANEL ASSY - FIRE DETECTION RELAY	A25	1
	161-54116-800	•PANEL ASSY - FIRE DETECTION RELAY	G7	1
	161-54108	••SUPPORT - FIRE-DETECTOR PANEL		1
	35886	••PANEL - TWO-CIRCUIT RELAY (ETA)	A25	1
	13B-51031	••PANEL - RELAY (MAKE FROM 35886 (ETA))	G7	1
	AN749-2-4	••JUMPER -		1
	AN507-632R7	••SCREW -		16
	AN960D8L	•WASHER -		2
	AN960D10L	•WASHER -		2
	AN515-8R8	•SCREW -		2
	AN520-10R8	•SCREW -		2
-23	AN3101A14S2S	•RECEPTACLE -	001-300	1
	AN3101A16S1S	•RECEPTACLE -	301-	1
	AN3057-6A	•ADAPTER -	001-300	1
	AN3057-8A	•ADAPTER -	301-	1
	TA710-18	•CLAMP - ELECTRICAL HARNESS (TAI)	001-300	1
	AN742D22C	•CLAMP -	301-	1
	AN515-8R8	•SCREW -		1
	AN365-832	•NUT -		1
-24	AN3108B16S1S	•PLUG -		1
	AN3057-8A	•ADAPTER -		1
-25	AN3108B14S5S	•PLUG -		1
	AN3057-6A	•ADAPTER -		1
-26	172-54240-5	•INSULATOR - ELECTRICAL WIRING THROUGH BHD		1
	172-54240-3	•INSULATOR - ELECTRICAL WIRING THROUGH BHD		1
	172-54241	•SEAL - ELECTRICAL WIRING THROUGH BULKHEAD		1
	172-54242	•DOUBLER - ELECTRICAL WIRING THROUGH BHD		1
	AN960D8L	•WASHER -		1
	AN515-8R14	•SCREW -		4
-27	TA710-DH24	•CLAMP - ELECTRICAL HARNESS (TAI)		4
-28	TA710-DH28	•CLAMP - ELECTRICAL HARNESS (TAI)		1
-29	TA710-10	•CLAMP - ELECTRICAL HARNESS (TAI)		1
	TA710-DH12	•CLAMP - ELECTRICAL HARNESS (TAI)		1
-30	TA710-8	•CLAMP - ELECTRICAL HARNESS (TAI)		2
	AN515-8R8	•SCREW -		1
	AN365-832	•NUT -		6
				6
		(CONTINUED SEE FIG. 164)		

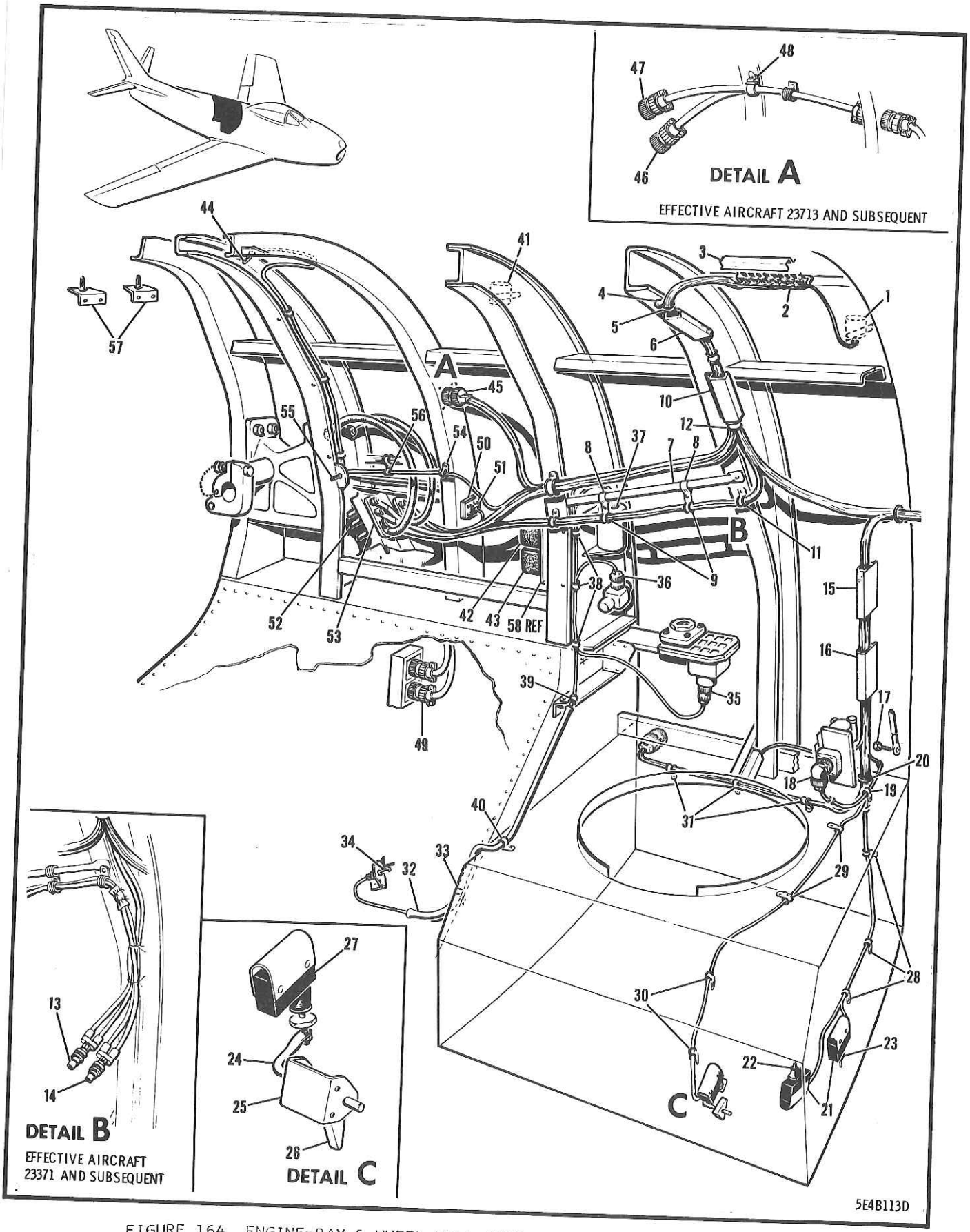

FIGURE 164 ENGINE-BAY & WHEEL WELL PORT SIDE ELECTRICAL EQUIPMENT

FIGURE AND INDEX NUMBER	GROUP / MAJOR ASSEMBLY / PART NUMBER	ELECTRICAL EQUIPMENT / ENGINE-BAY & WHEEL WELL PORT SIDE ELECTRICAL / 1234567 NOMENCLATURE	CODE	UNITS PER ASSY
164 -	191-54231	ELECTRICAL EQUIP. INSTL - INTER FUSELAGE (SEE FIG. 159)		REF
- 1	AN3350-1	•RELAY - 50-AMP SPST UNSEALED (FUEL PUMP)		1
	AN781-1	•NIPPLE -		1
	AN781-2	•NIPPLE -		2
	AN960D8	•WASHER -		2
	AN515-8R8	•SCREW -		2
	AN365-832	•NUT -		2
- 2	AN3436-2-12	•TERMINAL BLOCK ASSY - ELECTRICAL	001-123	1
	AN3436-2-10	•TERMINAL BLOCK ASSY - ELECTRICAL	124-	1
	AN515-4R10	•SCREW -		3
	AN960D4L	•WASHER -		3
	AN365-440	•NUT -		3
- 3	397-12	•COVER - ELECTRICAL TERMINAL BLOCK (HEN)	001-123	1
	397-10	•COVER - ELECTRICAL TERMINAL BLOCK (HEN)	124-	1
	AN960D6	•WASHER -		12
	AN935-6L	•WASHER -		12
	AN961-6	•WASHER -	001-123	12
	AN961-6	•WASHER -	124-	10
	AN936A6B	•WASHER -	001-123	12
	AN936A6B	•WASHER -	124-	10
	2W1-8-16-51	•WASHER - PLAIN (NAA)		2
	AN341-6	•NUT -	001-123	12
	AN341-6	•NUT -	124-	10
- 4	TA710-DH22	•CLAMP - ELECTRICAL HARNESS (TAI)		1
- 5	TA710-DH14	•CLAMP - ELECTRICAL HARNESS (TAI)		1
	AN515-8R24	•SCREW -		1
	NAS43DD-3-64	•SPACER -		1
	AN365-832	•NUT -		1
- 6	S-1245-3-5	•CONDUIT - (CAN)	001-336	1
	TA710-22	•CLAMP - ELECTRICAL HARNESS (TAI)	337-	1
	AN515-8R6	•SCREW -	001-336	2
	AN515-8R8	•SCREW -	337-	1
	AN365-832	•NUT -	001-336	2
	AN365-832	•NUT -	337-	1
- 7	13A-50019	•TUBE - ENGINE ACCESS DOOR LH WIRE SUPPORT		1
	AN515-10R8	•SCREW -		2
	AN364-1032	•NUT -		2
- 8	AN742D10	•CLAMP -		2
- 9	TA710-DH14	•CLAMP - ELECTRICAL HARNESS (TAI)		2
	AN515-8R8	•SCREW -		2
	AN365-832	•NUT -		2
-10	S-1245-2-4	•CONDUIT - (CAN)		1
	AN515-8R6	•SCREW -	001-370	2
	AN515-8R8	•SCREW -	371-	2
	AN960D8L	•WASHER -	371-	4
	AN365-832	•NUT -		2
-11	TA710-DH22	•CLAMP - ELECTRICAL HARNESS (TAI)		2
	AN515-8R10	•SCREW -		2
	AN365-832	•NUT -		2
-12	TA710-DH14	•CLAMP - ELECTRICAL HARNESS (TAI)		1
	AN515-8R10	•SCREW -		1
	AN365-832	•NUT -		1
-13	83736	•PLUG - (ATI) (QUICK DISCONNECT TYPE E) (STARTER E)	371-	1
-14	83737	•PLUG - (ATI) (QUICK DISCONNECT TYPE C) (STARTER E)	371-	1
-15	S-1245-1-4	•CONDUIT - (CAN)		1
	AN515-8R6	•SCREW -	001-370	2

FIGURE AND INDEX NUMBER	GROUP ELECTRICAL EQUIPMENT MAJOR ASSEMBLY ENGINE-BAY & WHEEL WELL PORT SIDE ELECTRICAL PART NUMBER	1234567 NOMENCLATURE	CODE	UNITS PER ASSY
164 -	AN515-8R8	•SCREW -	371-	2
	AN960D8L	•WASHER -	371-	4
	AN365-832	•NUT -		2
-16	S-1245-1-8	•CONDUIT - (CAN)		1
	AN515-8R6	•SCREW -	001-370	4
	AN515-8R8	•SCREW -	371-	4
	AN960D8L	•WASHER -	371-	8
	AN365-832	•NUT -		4
-17	AN6-10A	•BOLT -		1
	AN960D616	•WASHER -		1
	AN365-624	•NUT -		1
-18	AN3108B14S2S	•PLUG - (SPEEDBRAKE VALVE)	001-095	1
	AN3106B14S2S	•PLUG - (SPEEDBRAKE VALVE)	096-	1
	AN3057-6A	•ADAPTER -		1
	2L7-2	•LUG - SAFETY (NAA)		1
-19	TA710-5	•CLAMP - ELECTRICAL HARNESS (TAI)		3
	AN515-8R8	•SCREW -		3
	AN365-832	•NUT -		3
-20	295134-16B	•GROMMET - (MKM) (PLASTIC)		1
-21	BZ-7RQ1T	•SWITCH - SPDT PLUNGER (MSC) (LDG/GR DOOR UPLOCK & UP POSN IND)		2
	8C4-3	•COVER - SWITCH PROTECTOR RED (NAA) (LDG/GR DOOR UPLOCK & UP POSN IND)		2
	AN515-6R18	•SCREW - (LH DOOR UPLOCK & UP POSITION IND)		4
-22	146-54144	•SEAL ASSY - SWITCH PROTECTOR (LANDING GEAR DOOR UPLOCK INDICATOR SWITCH)		1
-23	146-54144-5	•SEAL ASSY - SWITCH PROTECTOR (LANDING GEAR DOOR UP POSITION INDICATOR)		1
	102-54256-3	••NUT - LANDING GEAR POSN IND SWITCH PROT		1
	2W1AL32-21-72	••WASHER - PLAIN (NAA) (ON -5)		1
	102-54265-3	••RETAINER - SWITCH PROTECTOR SEAL SPRING		1
	160-54259-3	••SPRING - COMPRESSION (ON -5)		1
	102-54259-3	••SPRING - LANDING GEAR POSITION INDICATOR SWITCH PROTECTOR SEAL (ON BASIC)		1
	146-54145	••SLEEVE - SWITCH PROTECTOR SEAL		1
	146-54146	••CAP - SWITCH PROTECTOR SEAL (ON BASIC)		1
	146-54146-3	••CAP - SWITCH PROTECTOR SEAL (ON -5)		1
	NAS51-87	••RING - (ON -5)		1
	151-54426	•PLATE ASSY - INFLATABLE CANOPY SEAL EMERGENCY DUMP SWITCH		2
	AN960D6L	•WASHER - (LDG/GR DOOR UPLK & UP POSN IND)		4
	AN365-632	•NUT - (LDG/GR DOOR UPLOCK & UP POSN IND)		4
	151-54243-1	•ACTUATOR ASSY - MAIN GEAR DOOR OPEN INDICATOR SWITCH LH		1
-24	151-54244	••ACTUATOR - MAIN GEAR DOOR OPEN IND SWITCH		1
	151-54261-5	••STOP - MAIN GEAR UPLOCK SEQUENCE SWITCH		1
	AN315-3L	••NUT -		1
	4S4D8-10	••SPACER - (NAA)		2
	AN960D416L	••WASHER -		2
-25	151-54246	••BRACKET - MAIN GEAR DOOR OPEN IND SW ACTE		1
-26	151-54245	••ARM - MAIN GEAR DOOR OPEN IND SWITCH ACTE		1
	AN3-6A	••BOLT -		1
	AN960D10L	••WASHER -		1
	AN960D10	••WASHER -		2
	AN365-1032	••NUT -		1
	AN515-8R28	•SCREW -		2
	NAS43DD-3-74	•SPACER -		2
	AN960D8	•WASHER -		2
	AN365-832	•NUT -		2
-27	BZ-7RQ1T	•SWITCH - SPDT PLUNGER (MSC)		1

FIGURE AND INDEX NUMBER	GROUP ELECTRICAL EQUIPMENT MAJOR ASSEMBLY ENGINE-BAY & WHEEL WELL PORT SIDE ELECTRICAL PART NUMBER	1234567 NOMENCLATURE	CODE	UNITS PER ASSY
164 -	8C4-3	•COVER - SWITCH PROTECTOR RED (NAA)		1
	AN515-6R26	•SCREW -		2
	NAS43DD-1-32	•SPACER -		2
	AN960D6L	•WASHER -		2
	146-54144	•SEAL ASSY - SWITCH PROTECTOR		1
	102-54256-3	••NUT - SWITCH PROTECTOR SEAL		1
	102-54265-3	••RETAINER - SWITCH PROTECTOR SEAL SPRING		1
	102-54259-3	••SPRING - SWITCH PROTECTOR SEAL		1
	146-54145	••SLEEVE - SWITCH PROTECTOR SEAL		1
	146-54146	••CAP - SWITCH PROTECTOR SEAL		1
-28	TA710-8	•CLAMP - ELECTRICAL HARNESS (TAI)		3
	AN515-8R8	•SCREW -		3
	AN365-832	•NUT -		3
-29	TA710-DH14	•CLAMP - ELECTRICAL HARNESS (TAI)		2
-30	TA710-4	•CLAMP - ELECTRICAL HARNESS (TAI)		2
	AN515-8R8	•SCREW -		4
	AN365-832	•NUT -		4
-31	TA710-8	•CLAMP - ELECTRICAL HARNESS (TAI)		3
	AN515-8R8	•SCREW -		3
	AN365-832	•NUT -		3
-32	13A-50013	•CONDUIT - FIRE DETECTION WIRE		1
-33	TA710-8	•CLAMP - ELECTRICAL HARNESS (TAI)		2
	AN515-8R8	•SCREW -		1
	AN520-10R20	•SCREW -		1
	NAS43DD-3-64	•SPACER -		1
	AN365-832	•NUT -		1
	AN365-1032	•NUT -		1
-34	35534-2	•THERMOCOUPLE - DETECTOR (ETA)		1
	AN515-8R8	•SCREW -		2
	AN365-832	•NUT -		2
-35	AN3106B14S5S	•PLUG - (FUEL SHUT-OFF VALVE)		1
	AN3057-6A	•ADAPTER -		1
	2L7-2	•LUG - SAFETY (NAA)		1
-36	AN3106B12S3S	•PLUG - (FUEL DE-ICER SHUT-OFF VALVE)	001-100	1
	AN3108B12S3S	•PLUG - (FUEL DE-ICER SHUT-OFF VALVE)	101-210	1
	AN3057-4A	•ADAPTER -	001-210	1
-37	AN3106B14S9S	•PLUG - (FUEL DE-ICER PRESSURE SWITCH)	001-100	1
	AN3108B14S9S	•PLUG - (FUEL DE-ICER PRESSURE SWITCH)	101-	1
	AN3057-6A	•ADAPTER -		1
-38	TA710-4	•CLAMP - ELECTRICAL HARNESS (TAI)		3
-39	AN742D5CB	•CLAMP -		1
-40	AN742D10CB	•CLAMP -		1
	AN515-8R8	•SCREW -		5
	AN365-832	•NUT -		5
-41	AN3350-1	•RELAY - 50-AMP SPST UNSEALED (FUEL PUMP)		1
	AN781-1	•NIPPLE -		1
	AN781-2	•NIPPLE -		2
	AN515-8R8	•SCREW -		2
	AN960D8	•WASHER -		2
	AN365-832	•NUT -		2
-42	AN3308-1	•RELAY - 10-AMP 3PDT SEALED CONNECTOR MTG (LANDING GEAR CONTROL)		1
	AN3100A20-33S	•RECEPTACLE -		1
	AN3057-12A	•ADAPTER -		1
	2L7-2	•LUG - SAFETY (NAA)		4
	AN515-4R6	•SCREW -		4
	AN365-440	•NUT -		1
-43	AN3310-1	•RELAY - 10-AMP 4PDT SEALED CONNECTOR MTG (COCKPIT AIR CONTROL)		1
	AN3100A22-19S	•RECEPTACLE -		

FIGURE AND INDEX NUMBER	GROUP ELECTRICAL EQUIPMENT MAJOR ASSEMBLY ENGINE-BAY & WHEEL WELL PORT SIDE ELECTRICAL PART NUMBER	1234567 NOMENCLATURE	CODE	UNITS PER ASSY
164 -	AN3057-12A	•ADAPTER -		1
	1J1-2-2-3	•JUMPER - WIRE (NAA)		1
	AN742D6CB	•CLAMP -		1
	AN515-8R6	•SCREW -		1
	AN365-832	•NUT -		1
	2L7-2	•LUG - SAFETY (NAA)		1
	AN515-4R6	•SCREW -		1
	AN365-440	•NUT -		4
-44	35534-2	•THERMOCOUPLE - DETECTION (ETA) (FIRE DETECTION FUSELAGE STA 215)		4
	AN515-8R8	•SCREW -		1
	AN365-832	•NUT -		2
-45	AN3100A32-6S	•RECEPTACLE -		2
	AN3057-20A	•ADAPTER -	001-200	1
	2L7-2	•LUG - SAFETY (NAA)	001-200	1
	AN515-6R6	•SCREW -	001-200	1
	AN365-632	•NUT -	001-200	4
-46	AN3106B32-6S	•PLUG - (AS PER EO 05-5E-6B/3)	001-200	4
	AN3108A32-6S	•PLUG -	001-712	1
	AN3106B32-6P	•PLUG - (AS PER EO 05-5E-6B/3)	713-	1
	AN3057-20A	•ADAPTER - (AS PER EO 05-5E-6B/3)		1
	1J1-1A2-7	•JUMPER - WIRE (NAA)(AS PER EO 05-5E-6B/3)		2
	AN515-6R6	•SCREW - (AS PER EO 05-5E-6B/3)		2
	AN365-632	•NUT - (AS PER EO 05-5E-6B/3)		2
	755-3-2-6	•CLIP - INTEGRALLY BONDED SUPPORT (ADE) (AS PER EO 05-5E-6B/3)		2
	AN742D18C	•CLAMP - (AS PER EO 05-5E-6B/3)		2
	AN742D18C	•CLAMP -	001-200	2
	AN515-8R8	•SCREW - (AS PER EO 05-5E-6B/3)	201-	3
	AN515-8R8	•SCREW -	001-200	2
	AN365-832	•NUT - (AS PER EO 05-5E-6B/3)	201-	3
	AN365-832	•NUT -	001-200	2
-47	AN3106B16S1S	•PLUG - (AS PER EO 05-5E-6B/4)	201-	3
	AN3108A16S1S	•PLUG -	001-712	1
	AN3057-8A	•ADAPTER - (AS PER EO 05-5E-6B/4)	713-	1
-48	676-3-6-FR	•STRAP ASSY - HARNESS BOLT TYPE (ADE)		1
	AN515-8R8	•SCREW -	713-	1
	AN365-440	•NUT -	713-	1
-49	AN3106M24-28S	•PLUG -	713-	1
	AN3106M28-11S	•PLUG -	001-370	1
-50	AN3436-6-1	•TERMINAL BLOCK ASSY - ELECTRICAL	001-370	1
	AN781-2	•NIPPLE -		1
	AN515-6R9	•SCREW -		1
	AN365-632	•NUT -		2
-51	AN3437-3-2	•STRIP -		2
	AN960D416	•WASHER -		1
	AN936A416B	•WASHER -		1
	AN345-416	•NUT -		1
	191-54194	•BARRIER - EXTERNAL POWER RECEPTACLE		1
-52	AN2552A3A	•RECEPTACLE -	301-	2
	AN509-10R14	•SCREW -		2
	AN509-10R16	•SCREW -		2
	AN520-10R8	•SCREW -		6
-53	13A-51034	•BUS-BAR - EXTERNAL POWER RECP GROUNDING		9
	AN960D816	•WASHER -		1
	AN365-820	•NUT -		2
-54	TA710-15	•CLAMP - ELECTRICAL HARNESS (TAI)		2
	AN520-10R8	•SCREW -		4
	AN365-1032	•NUT -		4
-55	35534-2	•THERMOCOUPLE - DETECTOR (ETA) (FIRE FUSELAGE STATION 225)		4
				1

FIGURE AND INDEX NUMBER	GROUP ELECTRICAL EQUIPMENT MAJOR ASSEMBLY ENGINE-BAY & WHEEL WELL PORT SIDE ELECTRICAL PART NUMBER	1234567 NOMENCLATURE	CODE	UNITS PER ASSY
164 -	AN515-8R8	•SCREW -		2
	AN365-832	•NUT -		2
-56	TA710-11	•CLAMP - ELECTRICAL HARNESS (TAI)		1
	TA710-4	•CLAMP - ELECTRICAL HARNESS (TAI)		10
	AN520-10R8	•SCREW -		10
	AN365-1032	•NUT -		10
-57	35534-2	•THERMOCOUPLE - DETECTION (ETA) (FIRE DETECTION ENGINE)		2
	AN515-8R8	•SCREW -		4
	AN960-8L	•WASHER -	371-	4
	AN365-832	•NUT -		4
-58	13A-50008	PANEL - FUSELAGE STA 209 ELECTRICAL (SEE SECTION 3)		REF
		(CONTINUED SEE FIG. 165)		

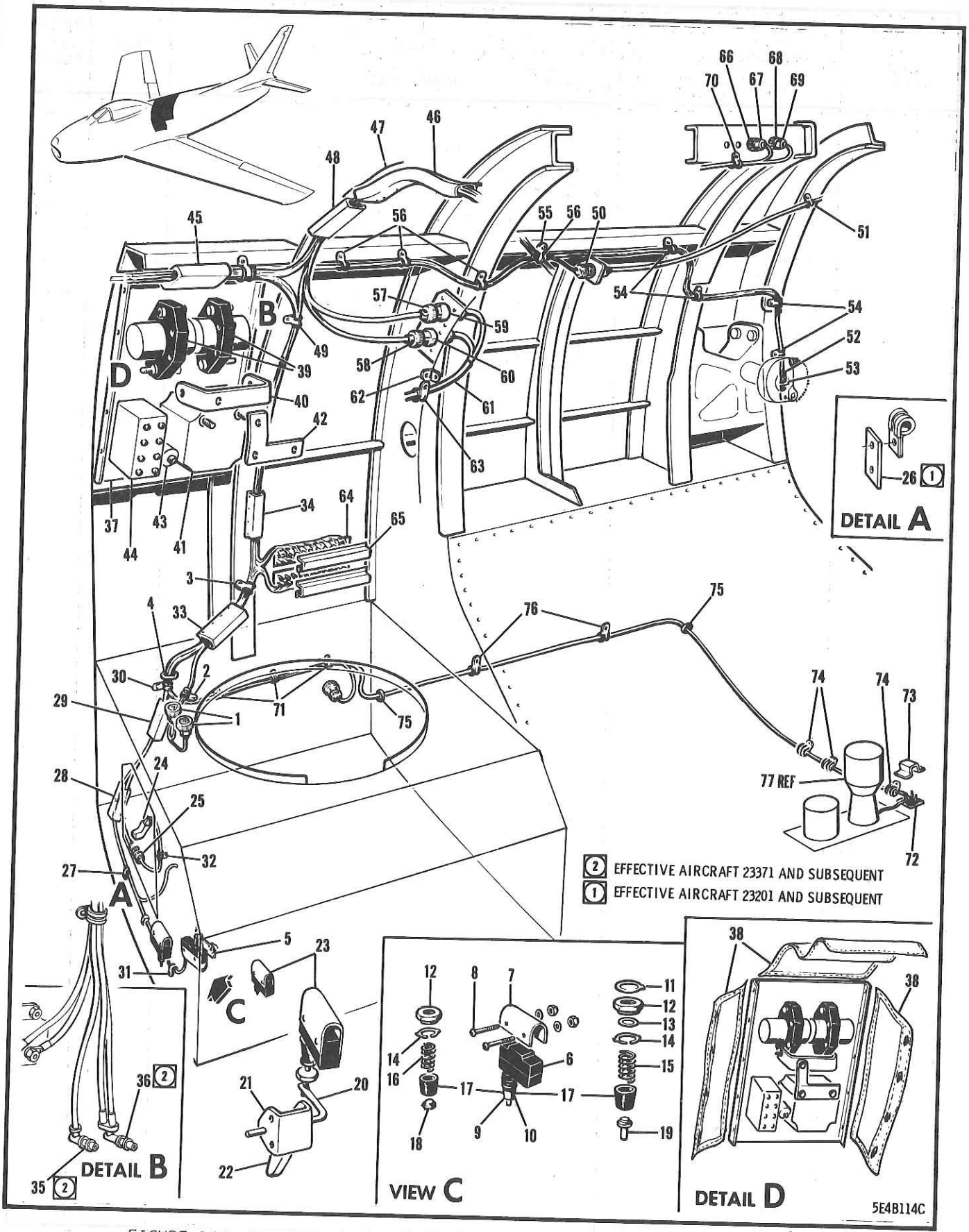

FIGURE 165 ENGINE-BAY & WHEEL WELL STARBOARD SIDE ELECTRICAL EQUIPMENT

FIGURE AND INDEX NUMBER	GROUP ELECTRICAL EQUIPMENT MAJOR ASSEMBLY ENGINE-BAY & WHEEL WELL STARBOARD SIDE ELECTRICAL PART NUMBER	1234567 NOMENCLATURE	CODE	UNITS PER ASSY
165 -	191-54231	ELECTRICAL EQUIP. INSTL - INTER FUSELAGE (SEE FIG. 159)		REF
- 1	AN3106B14S2S	•PLUG -		2
	AN3057-6A	•ADAPTER -		2
	2L7-2	•LUG - SAFETY (NAA)		2
- 2	TA710-7	•CLAMP - ELECTRICAL HARNESS (TAI)		1
- 3	TA710-DH16	•CLAMP - ELECTRICAL HARNESS (TAI)		1
	TA710-18	•CLAMP - ELECTRICAL HARNESS (TAI)		1
	TA710-DH20	•CLAMP - ELECTRICAL HARNESS (TAI)		2
	TA710-DH22	•CLAMP - ELECTRICAL HARNESS (TAI)		2
	AN515-8R8	•SCREW -		7
	AN365-832	•NUT -		7
- 4	295134-20B	•GROMMET - (MKM) (PLASTIC)		1
- 5	151-54426	•PLATE ASSY - INFLATABLE CANOPY SEAL EMY DUMP SWITCH		2
- 6	BZ-7RQ1T	•SWITCH - SPDT PLUNGER (MSC)		2
- 7	8C4-3	•COVER - SWITCH PROTECTOR RED (NAA)		2
- 8	AN515-6R18	•SCREW -		4
	AN960D6L	•WASHER -		4
	AN365-632	•NUT -		4
- 9	146-54144	•SEAL ASSY - SWITCH PROT (LDG/GR UPLOCK)		1
-10	146-54144-5	•SEAL ASSY - SWITCH PROT (DOOR POSN IND)		1
-11	NAS51-87	••RING -		1
-12	102-54256-3	••NUT - SWITCH PROTECTOR SEAL		1
-13	2W1AL32-21-72	••WASHER - PLAIN (NAA) (ON -5)		1
-14	102-54265-3	••RETAINER - SWITCH PROTECTOR SEAL SPRING		1
-15	160-54259-3	••SPRING - COMPRESSION (ON -5)		1
-16	102-54259-3	••SPRING - SWITCH PROTECTOR SEAL (ON BASIC)		1
-17	146-54145	••SLEEVE - SWITCH PROTECTOR SEAL		1
-18	146-54146	••CAP - SWITCH PROTECTOR SEAL (ON BASIC)		1
-19	146-54146-3	••CAP - SWITCH PROTECTOR SEAL (ON -5)		1
	151-54243-2	•ACTUATOR ASSY - MAIN GEAR DOOR OPEN INDICATOR SWITCH		1
-20	151-54244	••ACTUATOR - SWITCH		1
	151-54261-5	••STOP - SWITCH ACTUATOR		1
	AN315-3R	••NUT -		2
	4S4D8-10	••SPACER - (NAA)		2
	AN960D416L	••WASHER -		1
-21	151-54246	••BRACKET - SWITCH		1
-22	151-54245	••ARM - SWITCH ACTUATOR		1
	AN3-6A	••BOLT -		1
	AN960-10L	••WASHER -		2
	AN960D10	••WASHER -		1
	AN365-1032	••NUT -		2
	AN515-8R28	•SCREW -		2
	NAS43DD3-74	•SPACER -		2
	AN960D8	•WASHER -		2
	AN365-832	•NUT -		1
-23	BZ-7RQ1T	•SWITCH - SPDT PLUNGER (MSC)		1
	8C4-3	•COVER - SWITCH PROTECTOR RED (NAA)		1
	AN515-6R26	•SCREW -		2
	NAS43DD-1-32	•SPACER -		2
	AN960D6L	•WASHER -		2
	146-54144	•SEAL ASSY - SWITCH PROTECTOR		1
	102-54256-3	••NUT - SWITCH PROTECTOR SEAL		1
	102-54265-3	••RETAINER - SWITCH PROTECTOR SEAL SPRING		1
	102-54259-3	••SPRING - SWITCH PROTECTOR SEAL		1
	146-54145	••SLEEVE - SWITCH PROTECTOR SEAL		1
	146-54146	••CAP - SWITCH PROTECTOR SEAL		1
-24	412266F	•CONNECTOR - (MHR)		1

FIGURE AND INDEX NUMBER	GROUP ELECTRICAL EQUIPMENT MAJOR ASSEMBLY ENGINE-BAY & WHEEL WELL STARBOARD SIDE ELECTRICAL PART NUMBER	1234567 NOMENCLATURE	CODE	UNITS PER ASSY
165 -25	AN3101A14S5S	•RECEPTACLE -		1
	AN3057-6A	•ADAPTER -		1
-26	170-71031-950	•STRIP - ATTACHMENT FUSELAGE STA 185	201-	1
	AN515-8R8	•SCREW -	201-	1
	AN365-832	•NUT -	201-	1
-27	TA710-18	•CLAMP - ELECTRICAL HARNESS (TAI)		1
	AN515-8R8	•SCREW -		1
	AN365-832	•NUT -		1
-28	S-1245-1-2	•CONDUIT - (CAN)		1
	AN515-8R7	•SCREW -		1
	AN960D8L	•WASHER -		2
	AN365-832	•NUT -		4
-29	S-1245-2-2	•CONDUIT - (CAN)		2
	AN515-8R6	•SCREW -		1
	AN515-8R8	•SCREW -	001-370	2
	AN960D8L	•WASHER -	371-	2
	AN365-832	•NUT -	371-	4
-30	TA710-DH16	•CLAMP - ELECTRICAL HARNESS (TAI)		2
	TA710-DH12	•CLAMP - ELECTRICAL HARNESS (TAI)		2
	TA710-DH14	•CLAMP - ELECTRICAL HARNESS (TAI)		1
-31	TA710-4	•CLAMP - ELECTRICAL HARNESS (TAI)		1
-32	TA710-7	•CLAMP - ELECTRICAL HARNESS (TAI)		3
	AN515-8R8	•SCREW -		1
	AN365-832	•NUT -		7
-33	S-1245-2-3	•CONDUIT - (CAN)		7
	AN515-8R6	•SCREW -		1
	AN515-8R8	•SCREW -	001-370	2
	AN960D8L	•WASHER -	371-	2
	AN365-832	•NUT -	371-	4
-34	S-1245-2-4	•CONDUIT - (CAN)		2
	AN742D20C	•CLAMP -	001-140	1
	AN515-8R6	•SCREW -	141-	1
	AN515-8R8	•SCREW -	001-140	3
	AN365-832	•NUT -	141-	1
	AN365-832	•NUT -	001-140	3
-35	83805	•DISCONNECT - (ATI) (QUICK) (GENERATOR FIELD A)	141- 371-	1 1
-36	83750	•DISCONNECT - (ATI) (QUICK) (GENERATOR B)	371-	1
-37	172-54079-800	•PANEL ASSY - ENGINE SECTION RELAY (AS PER EO 05-5E-6B/2)		1
-38	172-54037-800	••COVER - RELAY PANEL (ASPER EO 05-5E-6B/2)		1
	AN3-4	•BOLT -		4
	AN960D10	•WASHER -		4
-39	AN3380-1	•RELAY - 400-AMP SPST UNSEALED		2
	AN520-10R8	•SCREW -	001-100	8
	AN520-10R8	•SCREW -	101-	4
	AN960D10L	•WASHER -		2
-40	151-54095	•BUS-BAR - RELAY PANEL POWER		1
	13-50067	•BUS-BAR - RELAY PANEL POWER	301-	1
-41	AN3391-1	•RELAY - 600-AMP AUTO DROP-OUT SOLENOID		1
	2W1-24-28-125	•WASHER - PLAIN (NAA)	101-	4
	AN3-4A	•BOLT -		4
-42	151-54096	•BUS-BAR - STARTER RELAY	001-300	1
	13-50068	•BUS-BAR - STARTER RELAY	301-	1
	AN6-6A	•BOLT -		1
	AN365-624	•NUT -		1
-43	PR-10-F	•RESISTOR - (GMC) (50-OHM)		1
	AN520-10R36	•SCREW -		1
	2W1F13-18-62	•WASHER - PLAIN (NAA)		2

FIGURE AND INDEX NUMBER	GROUP ELECTRICAL EQUIPMENT MAJOR ASSEMBLY ENGINE-BAY & WHEEL WELL STARBOARD SIDE ELECTRICAL PART NUMBER	1234567 NOMENCLATURE	CODE	UNITS PER ASSY
165 -	AN960D10	•WASHER -		1
-44	1264-938	•RELAY - (LRC) (DPST) (FUEL XMTR PUMP)		1
	AN515-8R8	•SCREW -		2
	AN960D8	•WASHER -		1
	2W1-24-28-125	•WASHER - PLAIN (NAA)		4
-45	13A-50010	•CONDUIT - BULKHEAD 178 RH		1
	AN515-8R10	•SCREW -	001-480	4
	AN515-6R10	•SCREW -	481-	4
	2W1P10-20-125	•WASHER - PLAIN (NAA)	001-480	8
	2W1P10-20-125	•WASHER - PLAIN (NAA)	481-	4
	AN960-6L	•WASHER -	481-	4
	AN365-832	•NUT -	001-480	4
	AN365-632	•NUT -	481-	4
-46	13A-50009	•CONDUIT - ENGINE BAY CENTRE		1
	AN515-8R6	•SCREW -		2
	AN515-8R10	•SCREW -		2
	AN960-8L	•WASHER -		6
	AN365-832	•NUT -		4
-47	9E1-3-2	•EXTRUSION - PLASTIC (NAA)		1
-48	13A-53015	•CONDUIT - ELECTRICAL WIRE HARNESS PROT		1
	AN515-8R6	•SCREW -		4
	AN365-832	•NUT -		4
-49	AN742D15C	•CLAMP -		3
	AN742-12	•CLAMP -		1
	AN515-8R8	•SCREW -		4
	AN365-832	•NUT -		4
-50	AN3100A16-12S	•RECEPTACLE -	001-210	1
	AN3057-8A	•ADAPTER -	001-210	1
	2L7-2	•LUG - SAFETY (NAA)	001-210	1
	AN515-4R6	•SCREW -	001-210	4
	AN365-440	•NUT -	001-210	4
-51	A30114-2	•CLAMP - CUSHIONED HARNESS (TIN)		1
	A3125-2	•CLAMP - CUSHIONED HARNESS (TIN)	001-210	1
	AN515-8R6	•SCREW -	001-210	1
	AN365-832	•NUT -	001-210	1
-52	AN3101A14S2S	•RECEPTACLE -		1
	AN3057-6A	•ADAPTER -		1
-53	TA710-18	•CLAMP - ELECTRICAL HARNESS (TAI)		1
-54	TA710-4	•CLAMP - ELECTRICAL HARNESS (TAI)		4
-55	TA710-8	•CLAMP - ELECTRICAL HARNESS (TAI)		1
-56	TA710-6	•CLAMP - ELECTRICAL HARNESS (TAI)	001-210	4
	TA710-4	•CLAMP - ELECTRICAL HARNESS (TAI)	211-	4
	AN515-8R8	•SCREW -		8
	AN365-832	•NUT -		8
-57	AN3106M20-16S	•PLUG -		1
-58	AN3106M20-27S	•PLUG -		1
-59	AN3100M20-27P	•RECEPTACLE -	001-370	1
-60	AN3100M20-16P	•RECEPTACLE -	001-370	1
	AN3420-8	•BUSHING -	371-	1
	AN3420-10	•BUSHING -	371-	1
	AN515-4R8	•SCREW -	001-370	8
	AN960-4L	•WASHER -	001-370	8
	AN365-440	•NUT -	001-370	8
-61	NA2-3036B	•DUCT - AIR (FLE) & (CLA) & (USR) & (RAY)		2
	AN515-6R8	•SCREW -		8
	AN960D4	•WASHER -		1
	AN960D6	•WASHER -		1
	AN365-632	•NUT -		8
-62	13A-53016	•BRACKET - CLAMP SUPPORT	001-370	1
-63	AN742D14C	•CLAMP -	001-370	1

FIGURE AND INDEX NUMBER	GROUP ELECTRICAL EQUIPMENT MAJOR ASSEMBLY ENGINE-BAY & WHEEL WELL STARBOARD SIDE ELECTRICAL PART NUMBER	1234567 NOMENCLATURE	CODE	UNITS PER ASSY
165 -	AN515-8R8	•SCREW -	001-370	1
	AN365-832	•NUT -	001-370	1
	AN742D12C	•CLAMP - (ON ENGINE)	001-370	6
	NAS54A4	•BOLT - (ON ENGINE)	001-370	1
	AN935-416L	•WASHER - (ON ENGINE)	001-370	1
	AN742D16C	•CLAMP -		1
	AN520-428R8	•SCREW -	001-372	1
	AN515-8R8	•SCREW -	373-	1
	AN960-8L	•WASHER -		1
	AN935-8L	•WASHER -	001-372	1
	AN365-832	•NUT -	373-	1
-64	AN3436-2-11	•TERMINAL BLOCK ASSY - ELECTRICAL	001-210	2
	AN3436-2-11	•TERMINAL BLOCK ASSY - ELECTRICAL	211-	1
	AN3436-2-6	•TERMINAL BLOCK ASSY - ELECTRICAL	211-	1
	AN3433-2-2	•BUS - TERMINAL BLOCK		1
-65	397-11	•COVER - ELECTRICAL TERMINAL BLOCK (HEN)	001-210	2
	397-11	•COVER - ELECTRICAL TERMINAL BLOCK (HEN)	211-300	1
	13A-51060	•COVER - TERMINAL BLOCK	301-	1
	397-6	•COVER - ELECTRICAL TERMINAL BLOCK (HEN)	211-	1
	AN960D6	•WASHER -	001-210	22
	AN960D6	•WASHER -	211-	17
	AN935-6L	•WASHER -	001-210	22
	AN935-6L	•WASHER -	211-	17
	AN341-6	•NUT -	001-210	22
	AN341-6	•NUT -	211-	17
-66	AN3100A14S2S	•RECEPTACLE -		1
-67	AN3106B14S2P	•PLUG - (FIRE DETECTION HEAD DISCONNECT)		1
	AN3054-6	•NUT -		1
	2W1SR16-22-91	•WASHER - PLAIN (NAA)		1
	2W1F32-22-63	•WASHER - PLAIN (NAA)		1
	AN3057-6	•ADAPTER -	001-517	2
	AN3057-6	•ADAPTER -	518-	1
	295004	•STRAP - (MKM) (FIRE DETECTION)	518-	1
	49184	•CLIP - (MKM) (FIRE DETECTION)	518-	1
	AN515-4R6	•SCREW -		4
	AN365-440	•NUT -		4
-68	AN3100A14S1S	•RECEPTACLE -	001-430	1
-69	AN3106B14S1P	•PLUG - (TARGET TOW DISCONNECT)	001-430	1
	AN3054-6	•NUT -	001-430	1
	2W1S16-22-91	•WASHER - PLAIN (NAA)	001-430	1
	2W1F32-22-63	•WASHER - PLAIN (NAA)	001-430	1
	AN3057-6	•ADAPTER -	001-430	2
	AN515-4R6	•SCREW -	001-430	4
	AN365-440	•NUT -	001-430	4
-70	TA710-6	•CLAMP - ELECTRICAL HARNESS (TAI)	001-370	3
	TA710-6	•CLAMP - ELECTRICAL HARNESS (TAI)	371-	4
	AN515-8R8	•SCREW -	001-370	3
	AN515-8R8	•SCREW -	371-	4
	AN365-832	•NUT -	001-370	3
	AN365-832	•NUT -	371-	4
-71	TA710-6	•CLAMP - ELECTRICAL HARNESS (TAI)		3
	AN515-8R8	•SCREW -		3
	AN365-832	•NUT -		3
-72	AN3436-2-1	•TERMINAL BLOCK ASSY - ELECTRICAL		1
-73	397-1	•COVER - ELECTRICAL TERMINAL BLOCK (HEN)	201-	1
	AN515-4R10	•SCREW -		2
	AN960D4L	•WASHER -		2
	AN960D6	•WASHER -		1
	AN935-6L	•WASHER -		1
	AN365-440	•NUT -		2

FIGURE AND INDEX NUMBER	GROUP ELECTRICAL EQUIPMENT MAJOR ASSEMBLY ENGINE-BAY & WHEEL WELL STARBOARD SIDE ELECTRICAL PART NUMBER	1234567 NOMENCLATURE	CODE	UNITS PER ASSY
165 -	AN341-6	•NUT -		1
-74	49138	•FASTENER - WIRING (UCF)		3
-75	AN931-4-7	•GROMMET -		2
-76	49137	•FASTENER - WIRING (UCF)		2
-77	TF31400-3	PUMP ASSY - (CPT) (BOOSTER) (SEE SECTION 12)		REF
		-000-		

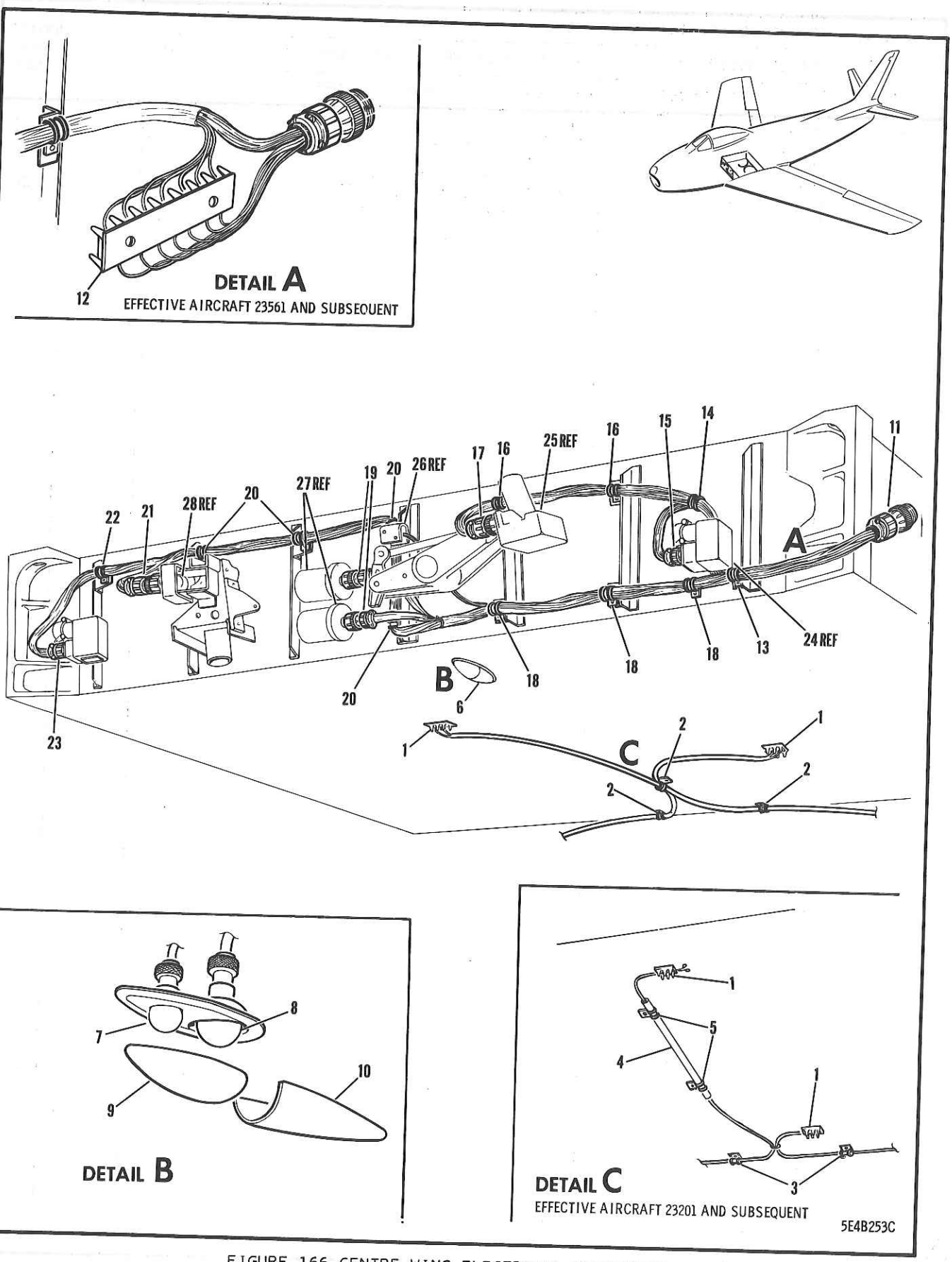

FIGURE 166 CENTRE WING ELECTRICAL EQUIPMENT

FIGURE AND INDEX NUMBER	GROUP ELECTRICAL EQUIPMENT MAJOR ASSEMBLY CENTRE WING ELECTRICAL EQUIPMENT PART NUMBER	1234567 NOMENCLATURE	CODE	UNITS PER ASSY
166 -	170-54014-1	ELECTRICAL EQUIP. INSTL - WING (CENTRE) (SEE FIG. 167)	001-610	REF
	13B-50003-1	ELECTRICAL EQUIP. INSTL - WING (CENTRE) (SEE FIG. 167)	611-	REF
- 1	AN3436-2-2	.TERMINAL BLOCK ASSY -		2
	AN515-4R6	.SCREW -		4
	AN365-440	.NUT -		4
	AN961-6	.WASHER -		4
	AN936A6B	.WASHER -		4
	AN341-6	.NUT -		4
	397-2	.COVER - ELECTRICAL TERMINAL BLOCK (HEN)	101-	2
- 2	AN742D4C	.CLAMP -	001-200	3
- 3	AN742D4C	.CLAMP -	201-	2
	AN515-8R8	.SCREW -	001-200	3
	AN515-8R8	.SCREW -	201-	2
	AN365-832	.NUT -	001-200	3
	AN365-832	.NUT -	201-	2
- 4	10C2A14-16-1/8	.CONDUIT - SEMI-RIGID PLASTIC TUBING (NAA)	201-	1
- 5	AN742D4	.CLAMP -	201-	2
	AN515-8R28	.SCREW -	201-	2
	NAS43DD-3-80	.SPACER -	201-	2
	AN365-832	.NUT -	201-	2
- 6	AN3177-9	.LIGHT ASSY - UPPER & LOWER FUSELAGE (TWO LAMPS) (LOWER FUSELAGE)	001-210	1
	AN904-1	..GASKET -	001-210	1
	AN899-1	..GASKET -	001-210	1
	AN507-632R12	..SCREW -	001-210	1
	AN3054-5	..NUT -	001-210	2
- 7	AN3131-303	.LAMP - (CLEAR)	001-210	1
- 8	AN3133-311	.LAMP - (CLEAR)	001-210	1
- 9	AN3099-1	.COVER -	001-210	1
	2W1P8-18-32	.WASHER - PLAIN (NAA)	001-210	2
	A5910-6Z-3	.RING - RETAINING (TIN)	001-210	1
	AN530-6R8	.SCREW -	001-210	5
-10	140-54011	.FAIRING ASSY - LOWER FUSELAGE POSN LIGHT	001-210	1
	PK79XZ-6-11	.SCREW - PHILLIPS RECESSED TYPE Z SHEET METAL (PKC)	001-210	1
	PK79XZ6-20	.SCREW - PHILLIPS RECESSED TYPE Z SHEET METAL (PKC)	001-210	1
	49138	.FASTENER - WIRING (UCF)	001-010	2
-11	AN3101B22-14P	.CONNECTOR -		1
	AN3057-12A	.ADAPTER -		1
-12	AN3436-2-7	.TERMINAL BLOCK ASSY -	561-	1
	AN515-4R8	.SCREW - (TERMINAL BLOCK ATTACHING)	561-	2
	AN3433-2-2	.BUS -	561-	2
	AN960-4L	.WASHER -	561-	2
	AN365-440	.NUT -	561-	2
	397-7	.COVER - ELECTRICAL TERMINAL BLOCK (HEN)	611-	1
-13	AN742D10C	.CLAMP -		1
-14	AN742D6C	.CLAMP -		1
	AN515-8R8	.SCREW -		2
	AN365-832	.NUT -		2
-15	AN3106B12S3S	.CONNECTOR - (PRESSURE SWITCH)		1
	AN3054-4	.NUT -	001-610	1
	AN3057-4A	.ADAPTER -	611-	1
	AN931-4-7	.GROMMET -	001-610	1
-16	AN742D4C	.CLAMP -		2
	AN515-8R8	.SCREW -		2
	AN365-832	.NUT -		2
-17	AN3106B14S7S	.CONNECTOR - (AILERON BUNGEE TRIM ACTUATOR)		1

FIGURE AND INDEX NUMBER	GROUP ELECTRICAL EQUIPMENT MAJOR ASSEMBLY CENTRE WING ELECTRICAL EQUIPMENT PART NUMBER	1234567 NOMENCLATURE	CODE	UNITS PER ASSY
166 -	AN3057-6A	•ADAPTER -		1
-18	AN742D9C	•CLAMP -		3
	NAS43DD3-16	•SPACER -		3
	AN515-8R12	•SCREW -	001-610	3
	AN515-8R8	•SCREW -	001-610	3
	AN365-832	•NUT -	611-	3
-19	AN3106B14S2S	•CONNECTOR - (HYDRAULIC PRESS. TRANSMITTER)		2
	AN3057-6A	•ADAPTER -		2
-20	AN742D6C	•CLAMP -		4
	AN515-8R8	•SCREW -		4
	AN365-832	•NUT -		4
-21	AN3106B10SL4S	•CONNECTOR - (HYDRAULIC BY-PASS VALVE)		1
	AN3057-4A	•ADAPTER -		1
-22	AN742D5C	•CLAMP -		1
	AN515-8R8	•SCREW -		1
	AN365-832	•NUT -		1
-23	AN3106B12S3S	•CONNECTOR - (PRESSURE SWITCH)		1
	AN3054-4	•NUT -		1
	AN3057-4A	•ADAPTER -	001-610	1
	AN931-4-7	•GROMMET -	611-	1
-24	29100-2	SWITCH - HYDRAULIC PRESSURE (HRM) (SEE SECTION 11)	001-610	1
-25	86283	ACTUATOR - LINEAR MODEL 396H (LEA) (SEE SECTION 7)		REF
-26	165-54757	SWITCH ASSY - AILERON NEUTRAL POSITION INBD (SEE SECTION 7)		REF
-27	21323	TRANSMITTER - HYDRAULIC PRESSURE TYPE NI (G.F.E.) (SEE SECTION 8)		REF
-28	13-1010	VALVE - HYDRAULIC SOLENOID PILOT OPR 3-WAY 2-POSN SEL (PII) (SEE SECTION 11)		REF
		(CONTINUED SEE FIG. 170)		

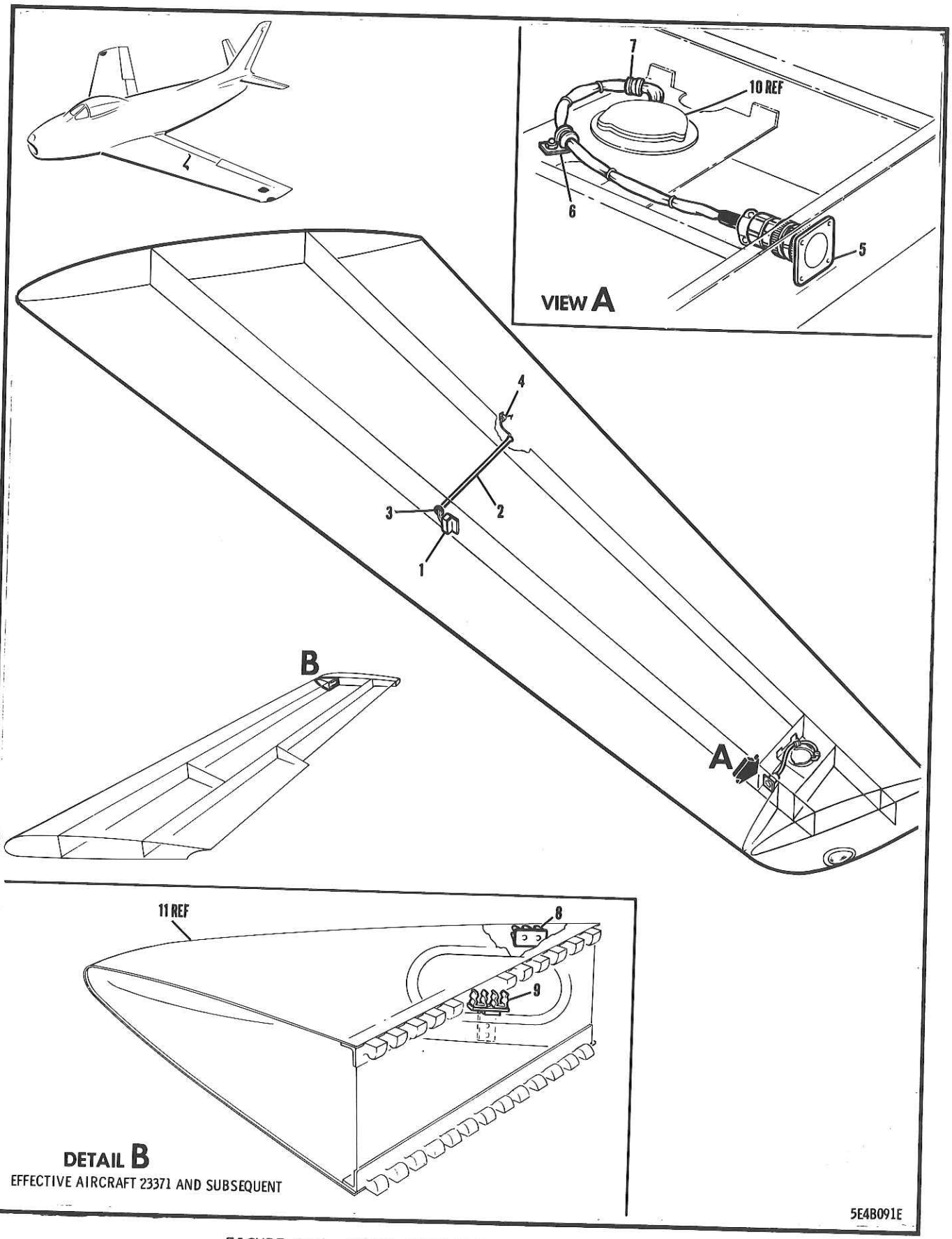

FIGURE 167 OUTER WING ELECTRICAL EQUIPMENT

FIGURE AND INDEX NUMBER	GROUP ELECTRICAL EQUIPMENT MAJOR ASSEMBLY OUTER WING ELECTRICAL EQUIPMENT PART NUMBER	1234567 NOMENCLATURE	CODE	UNITS PER ASSY
167 -	170-54014-1	ELECTRICAL EQUIP. INSTL - PORT WING (SEE SECTION 1)	001-610	NP
	13B-50003-1	ELECTRICAL EQUIP. INSTL - PORT WING (SEE SECTION 1)	611-	NP
	170-54014-2	ELECTRICAL EQUIP. INSTL - STARBOARD WING (SEE SECTION 1)	001-610	NP
	13B-50003-2	ELECTRICAL EQUIP. INSTL - STARBOARD WING (SEE SECTION 1)	611-	NP
- 1	AN3436-2-2	.TERMINAL BLOCK ASSY -		1
	AN515-4R7	.SCREW - (TERMINAL BLOCK ATTACHING)		2
	AN365-440	.NUT -		2
	AN3433-2-2	.BUS -		1
	AN961-6	.WASHER -		2
	AN936A6B	.WASHER -		2
	AN341-6	.NUT -		2
	397-2	.COVER - ELECTRICAL TERMINAL BLOCK (HEN)	101-	1
- 2	140-54141	.CONDUIT - STA 157 OUTER WING ELECTRICAL		1
- 3	AN931-8-13	.GROMMET -		1
- 4	AN742D6	.CLAMP -		1
	4S3-8-10	.SPACER - BOLT (NAA)		1
	AN515-8R12	.SCREW -		1
	AN365-832	.NUT -		1
- 5	TBF-18-12PS	.RECEPTACLE - THRU-BULKHEAD FITTING (CED) (PORT WING) (AS PER EO 05-5E-6B/9)	001-370	1
	AN3106B18-12P	.PLUG - (PORT WING)	001-370	1
	AN3057-10A	.ADAPTER - (PORT WING)	001-370	2
- 6	AN742D5CB	.CLAMP - (PORT WING)	001-370	1
	AN515B8R7	.SCREW - (PORT WING)	001-370	1
	AN365B832	.NUT - (PORT WING)	001-370	1
- 7	AN742D9C	.CLAMP -	001-370	1
	AN520-8R12	.SCREW -	001-370	1
	AN365-832	.NUT -	001-370	1
- 8	AN3436-2-2	.TERMINAL BLOCK ASSY - (STARBOARD WING) (AS PER EO 05-5E-6B/9)	371-	1
	AN515-4R7	.SCREW - (STARBOARD WING)	371-	2
	AN365-440	.NUT - (STARBOARD WING)	371-	2
	AN961-6	.WASHER - (STARBOARD WING)	371-	2
	AN936A6B	.WASHER - (STARBOARD WING)	371-	2
	AN341-6	.NUT - (STARBOARD WING)	371-	2
	397-2	.COVER - ELECTRICAL TERMINAL BLOCK (HEN)	371-	1
- 9	172-54066	.CLIP ASSY - ELECTRICAL WING TIP LIGHT DISCONNECT (AS PER EO 05-5E-6B/9)	371-	1
	AN515B8R8	.SCREW - (PORT WING)	371-	1
	AN515-8R8	.SCREW - (STARBOARD WING)	371-	1
	2W18-8L	.WASHER - FLAT (NAA) (STARBOARD WING)	371-	1
	AN365B832	.NUT - (PORT WING)	371-	1
	AN365-832	.NUT - (STARBOARD WING)	371-	1
-10	27635	TRANSMITTER - REMOTE COMPASS (G.F.E.) (SEE SECTION 8)		REF
-11	13B-13024-20	WEDGE ASSY - PORT EXTN SLATTED LE TO TIP (SEE SECTION 1)		REF
		(CONTINUED SEE FIG. 166)		

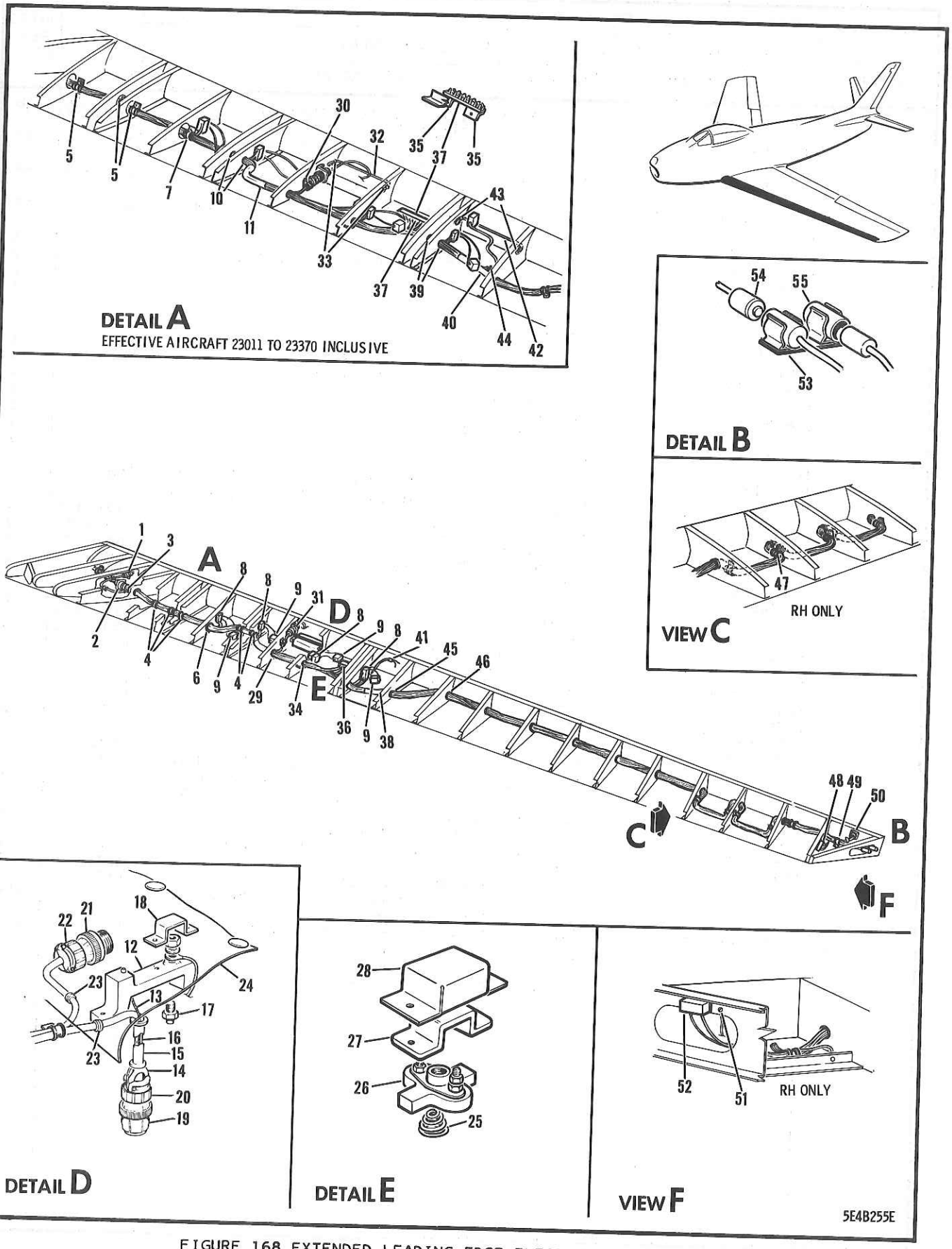

FIGURE 168 EXTENDED LEADING EDGE ELECTRICAL EQUIPMENT
(EFFECTIVE AIRCRAFT 23001 TO 23370 INCL)

FIGURE AND INDEX NUMBER	GROUP ELECTRICAL EQUIPMENT MAJOR ASSEMBLY EXTENDED LEADING EDGE ELECTRICAL EQUIPMENT PART NUMBER	1234567 NOMENCLATURE	CODE	UNITS PER ASSY
168 -	170-54014-1	ELECTRICAL EQUIP. INSTL - PORT WING (SEE FIG. 167)	001-010	REF
	13A-51035-1	WIRING INSTL - ELECTRICAL EXTN PORT WING LE BP 99-1/2 TANK STA (SEE SECT. 1) (AS PER EO 05-5E-6B/9) (FOR UPPER CODE SEE FIG. 169)	011-370	NP
	170-54014-2	ELECTRICAL EQUIP. INSTL - STARBOARD WING (SEE FIG. 167)	001-010	REF
	13A-51035-2	WIRING INSTL - ELECTRICAL EXTN STBD WING LE BP 99-1/2 TANK STA (SEE SECT. 1) (AS PER EO 05-5E-6B/9) (FOR UPPER CODE SEE FIG. 169)	011-370	NP
	AN742D14C	•CLAMP - (LE STA 46)	001-010	1
	TA710-12	•CLAMP - ELECTRICAL HARNESS (TAI) (PORT)	011-370	1
	TA710-10	•CLAMP - ELECTRICAL HARNESS (TAI) (STBD)	011-370	1
	AN515-8R7	•SCREW -	001-370	1
	AN742D7C	•CLAMP -	001-010	1
	AN515-8R8	•SCREW -	001-010	1
	AN365-832	•NUT -	001-010	1
	TA710-4	•CLAMP - ELECTRICAL HARNESS (TAI) (LE STA 56)	011-370	2
	NAS43C-3-16	•SPACER -	011-370	1
	AN515-8R12	•SCREW -	011-370	1
	AN515-8R7	•SCREW -	011-370	1
	AN365-832	•NUT -	011-370	2
- 1	AN3100A14S2S	•RECEPTACLE - (LE STA 56)	001-370	1
	AN3057-6A	•ADAPTER - (LIQUIDOMETER)	001-370	1
	2L7-2	•LUG - SAFETY (NAA)	001-370	1
	755-14-2-8	•CLIP - INTEGRALLY BONDED SUPPORT (ADE)	001-010	1
	AN515-8R7	•SCREW -	001-010	1
	AN365-832	•NUT -	001-010	1
	AN515-4R6	•SCREW -	011-370	4
	AN960D4L	•WASHER - OR	011-370	4
	2W18-4L	•WASHER - FLAT (NAA)	011-370	
	AN365-440	•NUT -	011-370	4
- 2	AN3100A32-8P	•RECEPTACLE - (LE STA 57) (FWD WING DISC.)	001-370	1
	AN3057-20A	•ADAPTER -	001-370	1
	AN500A8-10	•SCREW -	001-370	1
	AN515-8R10	•SCREW -	001-370	3
	AN365-832	•NUT -	001-370	4
- 3	AN742D5CB	•CLAMP - (PORT WING)	001-370	1
	1J1-2-0-8	•JUMPER - WIRE (NAA) (PORT WING)	001-010	1
	AN515-8R7	•SCREW - (PORT WING)	001-370	1
	AN365-832	•NUT - (PORT WING)	001-370	1
- 4	AN742D12C	•CLAMP - (PORT WING) (STA 60 & 73 & 76 & 96 & 98)	001-010	5
	AN742D10C	•CLAMP - (STARBOARD WING)	001-010	5
	AN515-8R7	•SCREW -	001-010	5
	AN365-832	•NUT -	001-010	5
	AN931-14-26	•GROMMET - (LE STA 60)	011-370	1
- 5	TA710-10	•CLAMP - ELECTRICAL HARNESS (TAI) (PORT) (LE STA 60 & 73 & 76)	011-370	3
	TA710-8	•CLAMP - ELECTRICAL HARNESS (TAI) (STBD) (LE STA 60 & 73 & 76)	011-370	3
	NAS43DD-3-24	•SPACER -	011-370	3
	AN515-8R13	•SCREW -	011-370	3
	AN365-832	•NUT -	011-370	3
- 6	295134-14A	•GROMMET - (MKM) (PLASTIC) (LE STA 86)	001-010	1
- 7	TA710-9	•CLAMP - ELECTRICAL HARNESS (TAI) (PORT) (LE STA 86)	011-370	1

FIGURE AND INDEX NUMBER	GROUP ELECTRICAL EQUIPMENT MAJOR ASSEMBLY EXTENDED LEADING EDGE ELECTRICAL EQUIPMENT PART NUMBER	1234567 NOMENCLATURE	CODE	UNITS PER ASSY
168 -	TA710-8	•CLAMP - ELECTRICAL HARNESS (TAI) (STBD) (LE STA 86)	011-370	1
	NAS43DD-3-24	•SPACER -	011-370	1
	AN515-8R13	•SCREW -	011-370	1
	AN365-832	•NUT -	011-370	1
- 8	AN3436-2-2	•TERMINAL BLOCK ASSY - (LE STA 86 & 98 & 117 & 131)	001-370	4
	AN515-4R7	•SCREW -	001-370	8
	AN365-440	•NUT -	001-370	8
	AN961-6	•WASHER -	001-370	8
	AN936A6B	•WASHER -	001-370	8
	AN341-6	•NUT -	001-370	8
	397-2	•COVER - ELECTRICAL TERMINAL BLOCK (HEN)	011-370	4
- 9	JJ-033	•JACK - MICROPHONE (MPR) (ROCKET RACK CONN) (LE STA 96 & 108 & 128 & 140)	001-370	4
	AN936A616	•WASHER -	001-370	8
	151-54115	•COVER - ROCKET RACK ELECTRICAL CONNECTOR	001-370	4
	AN515-4R7	•SCREW -	001-370	8
	AN365-440	•NUT -	001-370	8
	10C2B17-1-1/4	•CONDUIT - (NAA)	011-370	8
-10	295134-14A	•GROMMET - (MKM) (PLASTIC) (LE STA 96 & 98)	011-370	2
-11	8C7B6S9	•CONDUIT - (NAA) (LE STA 100)	011-370	1
	151-54019	•CABLE ASSY - BOMB DISC. PLUG RETAINING	001-370	1
-12	140-54027	••SUPPORT - O/W AUX FUEL TANK DISC. PLUG	001-370	1
-13	151-54019-3	••CABLE - BOMB DISCONNECT PLUG RETAINING	001-370	1
	RA-2487-2	••TERMINAL - PLAIN BALL SWAGED (ACC)	001-370	2
-14	151-54018	••CLIP - BOMB DISCONNECT PLUG RETAINING	001-370	1
-15	151-54019-5	••TUBING - BOMB DISCONNECT PLUG RETAINING	001-370	1
-16	10C2B8-14-1/2	•CONDUIT - (NAA)	001-370	1
	AN507-832R24	•SCREW -	001-370	1
	AN507-832R12	•SCREW -	001-370	1
	AN507-832R10	•SCREW -	001-370	1
	AN507-632R8	•SCREW -	001-370	2
	AN365-832	•NUT -	001-370	3
-17	336	•JACK - (ARH) (BANANA PLUG)	001-370	1
	AN936A416	•WASHER -	001-370	1
	AN960-416	•WASHER -	011-370	1
	5579	•NUT - PLATED STEEL HEXAGON (ICA)	001-370	3
-18	161-54136	•GUARD - ELECTRICAL FRAG BOMB DISCONNECT PLUG RETAINING	001-370	1
	AN509-8R10	•SCREW -	001-370	1
	AN365-832	•NUT -	001-370	1
-19	AN3107B18-12S	•PLUG - (PARAFRAGMENTATION RACK)	001-370	1
-20	AN3057-10A	•ADAPTER -	001-010	1
	AN3057-10	•ADAPTER -	011-370	1
-21	AN3101B18-1S	•RECEPTACLE - (BOMB RACK)	001-370	1
-22	AN3057-10A	•ADAPTER -	001-370	1
-23	AN931-5-9	•GROMMET -	001-370	2
	TA710-8	•CLAMP - ELECTRICAL HARNESS (TAI)	011-370	1
	AN515-8R10	•SCREW -	011-370	1
	AN365-832	•NUT -	011-370	1
-24	172-54145	•COVER ASSY - ELECTRICAL WING DISC. CANVAS	001-370	1
	AN515-8R8	•SCREW -	001-370	2
	AN960D8L	•WASHER -	001-370	4
		OR		
	2W18-8L	•WASHER - FLAT (NAA)	011-370	
	AN365-832	•NUT -	001-370	2
-25	117-54243	•SPRING - ROCKET ELEC CONNECTOR OPERATING	001-370	1
-26	117-54241	•PLUG ASSY - ROCKET ELECTRICAL CONNECTOR	001-370	1
	109-54144	••NUT-PLATE - CHEMICAL TANK TERMINAL		

FIGURE AND INDEX NUMBER	GROUP ELECTRICAL EQUIPMENT MAJOR ASSEMBLY EXTENDED LEADING EDGE ELECTRICAL EQUIPMENT PART NUMBER	1234567 NOMENCLATURE	CODE	UNITS PER ASSY
168 -	117-54242	••PLUG - ROCKET ELECTRICAL CONNECTOR	001-370	1
	AN515B4R10	••SCREW -	001-370	1
	AN515B4R5	••SCREW -	001-370	1
	AN960-4	••WASHER -	001-370	1
	AN936A4	••WASHER -	001-370	1
	AN365-440	••NUT -	001-370	3
-27	117-54240	•BRACKET - ROCKET ELECTRICAL CONN GUIDE	001-370	1
-28	117-54244	•COVER ASSY - ROCKET ELECTRICAL CONNECTOR	001-370	1
	AN507-632R9	•SCREW -	001-370	2
	AN365-632	•NUT -	001-370	2
-29	295134-14A	•GROMMET - (MKM) (PLASTIC) (LE STATION 108)	001-370	1
-30	TA710-4	•CLAMP - ELECTRICAL HARNESS (TAI) (LE STA 108)	011-370	1
	AN515-8R7	•SCREW -	011-370	1
	AN365-832	•NUT -	011-370	1
-31	AN3100A14S2S	•RECEPTACLE - (LIQUIDOMETER) (LE STA 108)	001-370	1
	AN3057-6A	•ADAPTER -	001-370	1
	755-14-2-8	•CLIP - INTEGRALLY BONDED SUPPORT (ADE)	001-010	1
	AN515-8R7	•SCREW -	001-010	1
	AN365-832	•NUT -	001-010	1
	AN515-4R6	•SCREW -	011-370	4
	AN960D4L	•WASHER -	011-370	4
		OR		
	2W18-4L	•WASHER - FLAT (NAA)	011-370	
	AN365-440	•NUT -	011-370	4
	2L7-2	•LUG - SAFETY (NAA)	001-370	1
-32	187-54163	•CORD ASSY - CANOPY PLUG DISCONNECT (LE STA 108-117)	011-370	1
-33	AN742D5C	•CLAMP -	011-370	2
	AN515-8R8	•SCREW -	011-370	1
	AN960D8L	•WASHER -	011-370	1
		OR		
	2W18-8L	•WASHER - FLAT (NAA)	011-370	
	AN365-832	•NUT -	011-370	1
	AN742D9C	•CLAMP - (LE STA 177) (STARBOARD WING)	001-010	2
	AN515-8R7	•SCREW - (STARBOARD WING)	001-010	2
	AN365-832	•NUT - (STARBOARD WING)	001-010	2
	AN515-8R7	•SCREW - (PARAFRAGMENTATION & BOMB RACK GROUND) (LE STA 117)	001-370	1
	AN960D8	•WASHER -	001-370	1
		OR		
	2W18-8	•WASHER - FLAT (NAA)	011-370	
	AN365-832	•NUT -	001-370	1
-34	295134-20A	•GROMMET - (MKM) (PLASTIC) (LE STATION 117)	001-370	1
-35	13A-51036	•ANGLE - TERMINAL BLOCK	001-370	2
		OR		
	170-54014-950	•ANGLE - WING ELECTRICAL (LE STA 120 & 126)	001-370	
	AN515-4R6	•SCREW -	001-370	2
	AN960D4L	•WASHER -	001-370	2
		OR		
	2W18-4L	•WASHER - FLAT (NAA)	011-370	
	AN365-440	•NUT -	001-370	2
-36	AN3436-2-11	•TERMINAL BLOCK ASSY - (PORT LE STA 120)	001-010	1
-37	AN3436-2-12	•TERMINAL BLOCK ASSY - (PORT LE STA 120)	011-370	1
	AN3436-2-10	•TERMINAL BLOCK ASSY - (STBD LE STA 120)	001-200	1
	AN3436-2-12	•TERMINAL BLOCK ASSY - (STBD LE STA 120)	211-370	1
	AN515-4R7	•SCREW -	001-370	2
	AN365-440	•NUT -	001-370	2
	AN961-6	•WASHER - (PORT WING)	001-200	11
	AN936A6B	•WASHER - (PORT WING)	001-200	11

FIGURE AND INDEX NUMBER	GROUP ELECTRICAL EQUIPMENT MAJOR ASSEMBLY EXTENDED LEADING EDGE ELECTRICAL EQUIPMENT PART NUMBER	1234567 NOMENCLATURE	CODE	UNITS PER ASSY
168 -	AN341-6	•NUT - (PORT WING)	001-200	11
	AN961-6	•WASHER - (PORT WING)	201-370	12
	AN936A6B	•WASHER - (PORT WING)	201-370	12
	AN341-6	•NUT - (PORT WING)	201-370	12
	AN961-6	•WASHER - (STARBOARD WING)	001-200	10
	AN936A6B	•WASHER - (STARBOARD WING)	001-200	10
	AN341-6	•NUT - (STARBOARD WING)	001-200	10
	AN961-6	•WASHER - (STARBOARD WING)	201-370	12
	AN936A6B	•WASHER - (STARBOARD WING)	201-370	12
	AN341-6	•NUT - (STARBOARD WING)	201-370	12
	397-12	•COVER - ELECTRICAL TERMINAL BLOCK (HEN) (PORT WING)	101-370	1
	397-10	•COVER - ELECTRICAL TERMINAL BLOCK (HEN) (STARBOARD WING)	101-200	1
	397-12	•COVER - ELECTRICAL TERMINAL BLOCK (HEN) (STARBOARD WING)	201-370	1
-38	10C2D11-6	•CONDUIT - (NAA)	001-010	1
	AN742D12C	•CLAMP - (PORT WING) (LE STA 128 & 131)	001-010	2
	AN742D10C	•CLAMP - (STARBOARD WING)	001-010	2
	AN515-8R7	•SCREW -	001-010	2
	AN365-832	•NUT -	001-010	2
-39	295134-12A	•GROMMET - (MKM)(PLASTIC)(LE STA 128 & 131)	011-370	2
-40	10C2E17-5	•CONDUIT - (NAA)	011-370	2
-41	49138	•FASTENER - WIRING (UCF)	001-010	1
-42	191-54088	•CORD ASSY - ELECTRICAL WIRE BUNDLE SUPPORT (LE STA 131-142)	011-370	1
-43	AN742D5C	•CLAMP -	011-370	2
	TA710-6	•CLAMP - ELECTRICAL HARNESS (TAI)	011-370	1
	AN515-8R7	•SCREW -	011-370	3
	AN365-832	•NUT -	011-370	3
	10C2B13-15	•CONDUIT - (NAA)	011-370	1
-44	TA710-7	•CLAMP - ELECTRICAL HARNESS (TAI) (LE STA 143)	011-370	1
	AN515-8R7	•SCREW -	011-370	1
	AN365-832	•NUT -	011-370	1
-45	295134-10A	•GROMMET - (MKM) (PLASTIC) (LE STATION 145)	001-370	1
	AN742D7C	•CLAMP - (LE STA 154)	001-010	1
	AN515-8R8	•SCREW -	001-010	1
	AN365-832	•NUT -	001-010	1
	TA710-6	•CLAMP - ELECTRICAL HARNESS (TAI) (LE STA 153) (PORT WING)	011-370	1
	AN742D5C	•CLAMP - (STARBOARD WING)	011-370	1
	AN515-8R7	•SCREW -	011-370	1
	AN365-832	•NUT -	011-370	1
-46	AN931-9-13	•GROMMET - (LE STA 153 & 164 & 174 & 183 & 197 & 208 & 219 & 229 & 238 & 250)	001-370	10
-47	AN742D5C	•CLAMP - (STARBOARD WING) (LE STA 184 & 198 & 208 & 220)	011-370	6
	AN515-8R8	•SCREW - (LE STA 184 & 220) (STBD WING)	011-370	2
	AN515-8R10	•SCREW - (LE STA 198 & 208) (STBD WING)	011-370	2
	AN365-832	•NUT - (STARBOARD WING)	011-370	4
	TA710-6	•CLAMP - ELECTRICAL HARNESS (TAI) (LE STA 220) (PORT WING)	011-370	1
	AN515-8R8	•SCREW - (PORT WING)	011-370	1
	AN365-832	•NUT - (PORT WING)	011-370	1
	TA710-6	•CLAMP - ELECTRICAL HARNESS (TAI) (PORT)	011-370	2
	AN515-8R10	•SCREW - (PORT WING)	011-370	1
	AN365-832	•NUT - (PORT WING)	011-370	1
	AN742D7C	•CLAMP - (PORT WING) (LE STA 239)	001-010	2
	AN515-8R8	•SCREW - (PORT WING)	001-010	2

FIGURE AND INDEX NUMBER	GROUP ELECTRICAL EQUIPMENT MAJOR ASSEMBLY EXTENDED LEADING EDGE ELECTRICAL EQUIPMENT PART NUMBER	1234567 NOMENCLATURE	CODE	UNITS PER ASSY
168 -	AN365-832	•NUT - (PORT WING)	001-010	2
	AN742D6CB	•CLAMP - (PORT WING) (LE STA 250)	001-370	1
	AN515-8R8	•SCREW - (PORT WING)	001-370	1
	AN365-832	•NUT - (PORT WING)	001-370	1
	TA710-6	•CLAMP - ELECTRICAL HARNESS (TAI) (PORT WING) (LE STA 250)	011-370	1
	AN515-8R8	•SCREW - (PORT WING)	011-370	1
	AN365-832	•NUT - (PORT WING)	011-370	1
-48	AN3436-2-7	•TERMINAL BLOCK ASSY - (PORT WING)	001-370	1
	AN515-4R7	•SCREW - (PORT WING)	001-370	2
	AN365-440	•NUT - (PORT WING)	001-370	2
	AN961-6	•WASHER - (PORT WING)	001-370	7
	AN936A6B	•WASHER - (PORT WING)	001-370	7
	AN341-6	•NUT - (PORT WING)	001-370	7
	397-7	•COVER - ELECTRICAL TERMINAL BLOCK (HEN) (PORT WING)	011-370	1
-49	AN742D5CB	•CLAMP - (STARBOARD WING) (LE STA 251)	001-010	1
	TA710-6	•CLAMP - ELECTRICAL HARNESS (TAI) (PORT WING) (LE STA 253)	011-370	1
	AN742D5C	•CLAMP - (STARBOARD WING)	001-010	1
	TA710-4	•CLAMP - ELECTRICAL HARNESS (TAI) (STBD) (LE STA 253)	011-370	1
	AN515-8R8	•SCREW -	001-370	1
	AN365-832	•NUT -	001-370	1
	AN742D5CB	•CLAMP - (PORT WING) (LE STA 255)	011-370	1
	AN515-8R7	•SCREW - (PORT WING)	011-370	1
	AN365-832	•NUT - (PORT WING)	011-370	1
	AN515-8R7	•SCREW - (STARBOARD WING TIP LIGHT GROUND) (LE STA 255)	011-370	1
	AN960D8	•WASHER - (STARBOARD WING)	011-370	1
	AN365-832	•NUT - (STARBOARD WING)	001-370	1
-50	AN3106B18-12S	•PLUG - (PORT WING) (GYRO COMPASS DISC•)	001-370	1
	AN3057-10A	•ADAPTER - (PORT WING)	001-370	1
-51	AN520-10R7	•SCREW - (STBD WING) (PITOT HEATER GROUND) (LE STA 262)	001-370	1
	AN960D10L	•WASHER - (STARBOARD WING)	001-370	1
	AN365-1032	•NUT - (STARBOARD WING)	001-370	1
-52	AN3436-2-2	•TERMINAL BLOCK ASSY - (STARBOARD WING) (LE STA 262)	001-370	2
	AN515-4R7	•SCREW - (STARBOARD WING)	001-370	2
	AN365-440	•NUT - (STARBOARD WING)	001-370	2
	AN961-6	•WASHER - (STARBOARD WING)	001-370	2
	AN936A6B	•WASHER - (STARBOARD WING)	001-370	2
	AN341-6	•NUT - (STARBOARD WING)	001-370	2
	397-2	•COVER - ELECTRICAL TERMINAL BLOCK (HEN) (STARBOARD WING)	011-370	1
-53	172-54066	•CLIP ASSY - ELECTRICAL WING TIP LIGHT DISCONNECT	001-370	1
	AN515-8R8	•SCREW -	001-370	1
	AN365-832	•NUT -	001-370	1
-54	1071	•COUPLER - (LTF) (CONNECTING) (MALE PORTION) OR	001-370	1
	1300	•CONNECTOR - (SMT) (ELECTRICAL) (MALE PORTION)	001-370	1
-55	1071	•COUPLER - (LTF) (CONNECTING) (FEMALE PORTION) OR	001-370	1
	1300	•CONNECTOR - (SMT) (ELECTRICAL) (FEMALE PORTION)	001-370	1

-000-

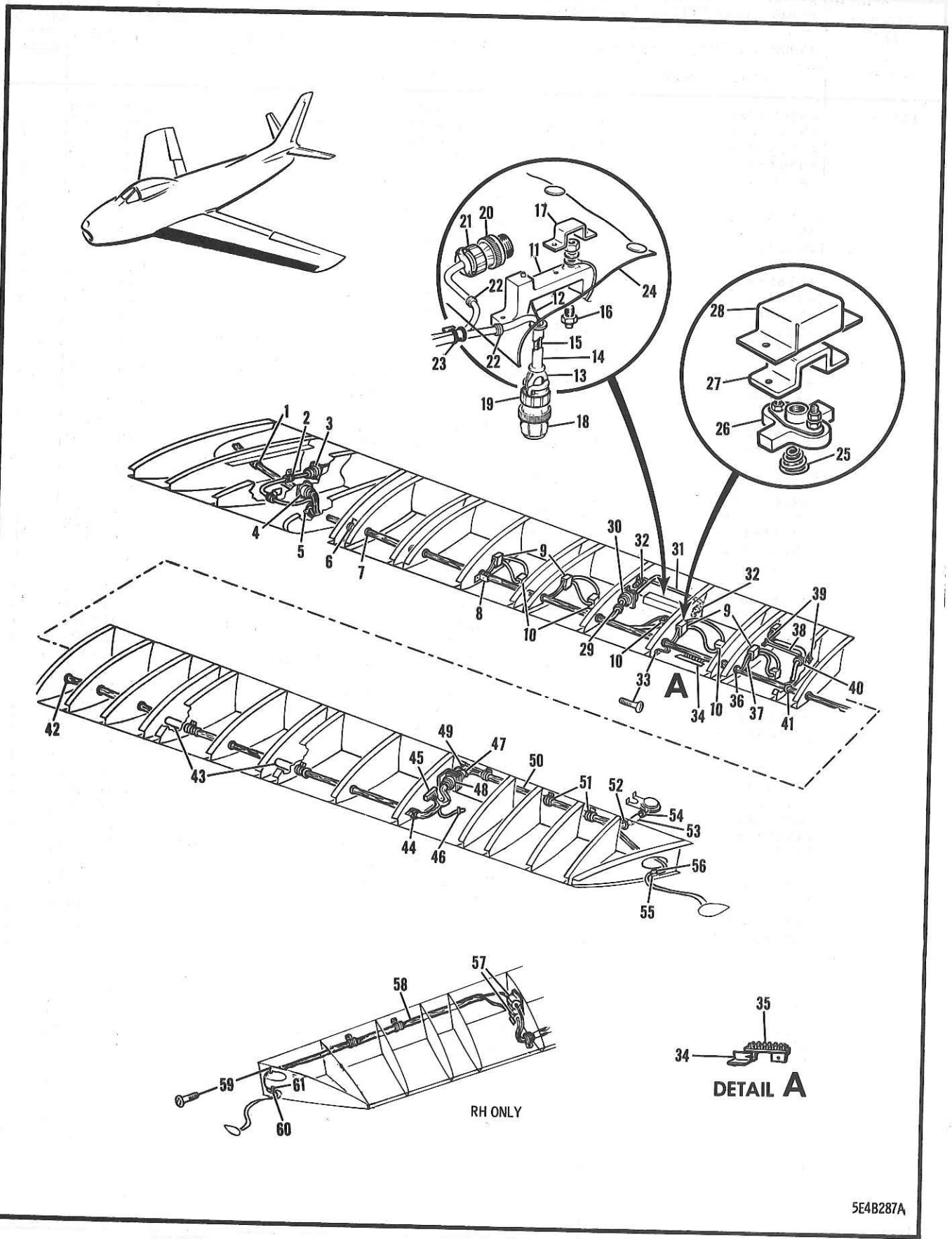

FIGURE 169 EXTENDED SLATTED LEADING EDGE ELECTRICAL EQUIPMENT
(EFFECTIVE AIRCRAFT 23371 & SUBS)

FIGURE AND INDEX NUMBER	GROUP ELECTRICAL EQUIPMENT MAJOR ASSEMBLY EXTENDED SLATTED LEADING EDGE ELECTRICAL EQUIPMENT PART NUMBER	1234567 NOMENCLATURE	CODE	UNITS PER ASSY
169 -	13B-50009-1	WIRING INSTL - ELECTRICAL EXTN PORT WING LE BP 99-1/2 TANK STA (SEE SECT. 1) (AS PER EO 05-5E-6B/9) (FOR LOWER CODE SEE FIG. 168)	371-	NP
	13B-50009-2	WIRING INSTL - ELECTRICAL EXTN STBD WING LE BP 99-1/2 TANK STA (SEE SECT. 1) (AS PER EO 05-5E-6B/9) (FOR LOWER CODE SEE FIG. 168)	371-	NP
- 1	MS21919WDG12	.CLAMP - LOOP TYPE SUPPORT CUSHIONED (PORT)	371-	1
	MS21919WDG10	.CLAMP - LOOP TYPE SUPPORT CUSHIONED (STBD)	371-	1
	AN515-8R7	.SCREW -	371-	1
- 2	MS21919WDG4	.CLAMP - LOOP TYPE SUPPORT CUSHIONED	371-	2
	AN515-8R7	.SCREW -	371-	2
	AN365-832	.NUT -	371-	2
- 3	AN3100A14S2S	.RECEPTACLE - (LE STA 56)	371-	1
	AN3057-6A	.ADAPTER - (LIQUIDOMETER)	371-	1
	2L7-2	.LUG - SAFETY (NAA)	371-	1
	AN515-4R6	.SCREW -	371-	4
	2W18-4L	.WASHER - FLAT (NAA)	371-	4
	AN365-440	.NUT -	371-	4
- 4	AN3100A32-8P	.RECEPTACLE - (LE STA 57) (FWD WING DISC.)	371-	1
	AN3057-20A	.ADAPTER -	371-	1
	AN500A8-10	.SCREW -	371-	1
	AN515-8R10	.SCREW -	371-	3
	AN365-832	.NUT -	371-	4
- 5	755-5-2-8	.CLIP - INTEGRALLY BONDED SUPPORT (ADE) (PORT WING)	371-	1
	AN515-8R7	.SCREW - (PORT WING)	371-	1
	AN365-832	.NUT - (PORT WING)	371-	1
	17C1	.CAP - BONDING CLAMP (NAA) (PORT WING)	371-	1
- 6	MS21919WDG10	.CLAMP - LOOP TYPE SUPPORT CUSHIONED (PORT)	371-	1
	AN515-8R7	.SCREW -	371-	1
	AN365-832	.NUT -	371-	1
- 7	295134-14A	.GROMMET - (MKM) (PLASTIC)	371-	10
- 8	MS21919WDG10	.CLAMP - LOOP TYPE SUPPORT CUSHIONED (PORT)	371-	1
	MS21919WDG8	.CLAMP - LOOP TYPE SUPPORT CUSHIONED (STBD)	371-	1
	AN515-8R7	.SCREW -	371-	1
	AN365-832	.NUT -	371-	1
- 9	AN3436-2-2	.TERMINAL BLOCK ASSY - (LE STA 86 & 98 & 117 & 131)	371-	4
	AN515-4R7	.SCREW -	371-	8
	AN365-440	.NUT -	371-	8
	AN961-6	.WASHER -	371-	8
	AN936A6B	.WASHER -	371-	8
	AN341-6	.NUT -	371-	8
	397-2	.COVER - ELECTRICAL TERMINAL BLOCK (HEN)	371-	4
-10	JJ-033	.JACK - MICROPHONE (MPR) (ROCKET RACK CONN) (LE STA 96 & 108 & 128 & 140)	371-	4
	AN936A616	.WASHER -	371-	4
	151-54115	.COVER - ROCKET RACK ELECTRICAL CONNECTOR	371-	4
	AN515-4R7	.SCREW -	371-	8
	AN365-440	.NUT -	371-	8
	10C2B17-1-1/4	.CONDUIT - (NAA)	371-	8
	151-54019	.CABLE ASSY - BOMB DISC. PLUG RETAINING	371-	1
-11	140-54027	..SUPPORT - O/W AUX FUEL TANK DISC. PLUG	371-	1
-12	151-54019-3	..CABLE - BOMB DISCONNECT PLUG RETAINING	371-	1
	RA-2487-2	..TERMINAL - PLAIN BALL SWAGED (ACC)	371-	2
-13	151-54018	..CLIP - BOMB DISCONNECT PLUG RETAINING	371-	1
-14	151-54019-5	..TUBING - BOMB DISCONNECT PLUG RETAINING	371-	1
-15	10C2B8-14-1/2	.CONDUIT - (NAA)	371-	1

FIGURE AND INDEX NUMBER	GROUP ELECTRICAL EQUIPMENT MAJOR ASSEMBLY EXTENDED SLATTED LEADING EDGE ELECTRICAL EQUIPMENT PART NUMBER	1234567 NOMENCLATURE	CODE	UNITS PER ASSY
169 -	AN507-832R24	•SCREW -	371-	1
	AN507-832R12	•SCREW -	371-	1
	AN507-832R10	•SCREW -	371-	1
	AN507-632R8	•SCREW -	371-	2
	AN365-832	•NUT -	371-	3
-16	336	•JACK - (ARH) (BANANA PLUG)	371-	1
	AN936A416	•WASHER -	371-	1
	AN960-416	•WASHER -	371-	1
	5579	•NUT - PLATED STEEL HEXAGON (ICA)	371-	3
-17	161-54136	•GUARD - ELECTRICAL FRAG BOMB DISCONNECT PLUG RETAINING	371-	1
	AN509-8R10	•SCREW - (GUARD TO SUPPORT ATTACHING)	371-	1
	AN365-832	•NUT -	371-	1
-18	AN3107B18-12S	•PLUG - (PARAFRAGMENTATION RACK)	371-	1
-19	AN3057-10	•ADAPTER -	371-	1
-20	AN3101B18-1S	•RECEPTACLE - (BOMB RACK)	371-	1
-21	AN3057-10A	•ADAPTER -	371-	1
-22	AN931-5-9	•GROMMET -	371-	2
-23	MS21919WDG8	•CLAMP - LOOP TYPE SUPPORT CUSHIONED	371-	1
	AN515-8R10	•SCREW -	371-	1
	AN365-832	•NUT -	371-	1
-24	172-54145-800	•COVER ASSY - ELECTRICAL WING DISC. CANVAS	371-	1
	AN515-8R8	•SCREW - (COVER ATTACHING)	371-	1
	AN960D8L	•WASHER -	371-	2
	AN365-832	•NUT -	371-	1
-25	117-54243	•SPRING - ROCKET ELECTRICAL CONN OPERATING	371-	1
-26	117-54241	•PLUG ASSY - ROCKET ELECTRICAL CONNECTOR	371-	1
	109-54144	••NUT-PLATE - CHEMICAL TANK TERMINAL	371-	1
	117-54242	••PLUG - ROCKET ELECTRICAL CONNECTOR	371-	1
	AN515B4R10	••SCREW -	371-	1
	AN515B4R5	••SCREW -	371-	1
	AN960-4	••WASHER -	371-	1
	AN936A4	••WASHER -	371-	1
	AN365-440	••NUT -	371-	3
-27	117-54240	•BRACKET - ROCKET ELECTRICAL CONN GUIDE	371-	1
	AN507-632R9	•SCREW -	371-	2
	AN365-632	•NUT -	371-	2
-28	117-54244	•COVER ASSY - ROCKET ELECTRICAL CONNECTOR	371-	1
-29	MS21919WDG4	•CLAMP - LOOP TYPE SUPPORT CUSHIONED	371-	1
	AN515-8R7	•SCREW -	371-	1
	AN365-832	•NUT -	371-	1
-30	AN3100A14S2S	•RECEPTACLE - (LIQUIDOMETER) (LE STA 108)	371-	1
	AN3057-6A	•ADAPTER -	371-	1
	AN515-4R6	•SCREW -	371-	4
	2W18-4L	•WASHER - FLAT (NAA)	371-	4
	AN365-440	•NUT -	371-	4
	2L7-2	•LUG - SAFETY (NAA)	371-	1
-31	187-54163	•CORD ASSY - CANOPY PLUG DISCONNECT (LE STA 108-117)	371-	1
-32	MS21919WDG5	•CLAMP - LOOP TYPE SUPPORT CUSHIONED	371-	2
	AN515-8R8	•SCREW -	371-	1
	AN960D8L	•WASHER -	371-	1
	AN365-832	•NUT -	371-	1
-33	AN515-8R7	•SCREW - (PARAFRAGMENTATION & BOMB RACK GROUND) (LE STA 117)	371-	1
	2W1AL12-12-16	•WASHER - PLAIN (NAA)	371-	1
	AN365-832	•NUT -	371-	1
-34	13A-51036	•ANGLE - TERMINAL BLOCK	371-	2
	AN515-4R6	•SCREW -	371-	2
	AN960D4L	•WASHER -	371-	2

FIGURE AND INDEX NUMBER	GROUP ELECTRICAL EQUIPMENT MAJOR ASSEMBLY EXTENDED SLATTED LEADING EDGE ELECTRICAL EQUIPMENT PART NUMBER	1234567 NOMENCLATURE	CODE	UNITS PER ASSY
169 -	AN365-440	•NUT -	371-	2
-35	AN3436-2-12	•TERMINAL BLOCK ASSY - (LE STA 120)	371-	1
	AN515-4R7	•SCREW -	371-	2
	AN365-440	•NUT -	371-	2
	AN961-6	•WASHER -	371-	12
	AN936A6B	•WASHER -	371-	12
	AN341-6	•NUT -	371-	12
	397-12	•COVER - ELECTRICAL TERMINAL BLOCK (HEN)	371-	1
-36	295134-12A	•GROMMET - (MKM) (PLASTIC) (LE STA 128-131)	371-	2
-37	10C2E17-5	•CONDUIT - (NAA)	371-	2
-38	191-54088	•CORD ASSY - ELECTRICAL WIRE BUNDLE SUP• (LE STA 131-142)	371-	1
-39	MS21919WDG5	•CLAMP - LOOP TYPE SUPPORT CUSHIONED	371-	2
	AN515-8R7	•SCREW -	371-	2
	AN365-832	•NUT -	371-	2
	10C2B13-15	•CONDUIT - (NAA)	371-	1
-40	MS21919WDG6	•CLAMP - LOOP TYPE SUPPORT CUSHIONED	371-	1
	AN515-8R7	•SCREW -	371-	1
	AN365-832	•NUT -	371-	1
-41	295134-10A	•GROMMET - (MKM) (PLASTIC) (LE STATION 145)	371-	1
-42	AN931-9-13	•GROMMET - (LE STA 153 & 156 & 165 & 174 & 197 & 220)	371-	6
-43	13B-53022	•CONDUIT - LEADING EDGE ELECTRICAL	371-	2
	AN742D10	•CLAMP -	371-	4
	AN515-8R8	•SCREW -	371-	4
	AN365-832	•NUT -	371-	4
-44	755-5-2-8	•CLIP - INTEGRALLY BONDED SUPPORT (ADE) (PORT WING)	371-	2
	755-6-2-8	•CLIP - INTEGRALLY BONDED SUPPORT (ADE) (PORT WING)	371-	1
	17C1	•CAP - BONDING CLAMP (NAA) (PORT WING)	371-	3
	AN515-8R8	•SCREW - (PORT WING)	371-	3
	AN365-832	•NUT - (PORT WING)	371-	3
-45	AN3436-2-7	•TERMINAL BLOCK ASSY - (PORT)	371-	1
	AN515-4R7	•SCREW - (PORT WING)	371-	2
	AN365-440	•NUT - (PORT WING)	371-	2
	AN961-6	•WASHER - (PORT WING)	371-	7
	AN936A6B	•WASHER - (PORT WING)	371-	7
	AN341-6	•NUT - (PORT WING)	371-	7
	397-7	•COVER - ELECTRICAL TERMINAL BLOCK (HEN) (PORT WING)	371-	1
-46	181-54217-3	•CONNECTOR ASSY - ELECTRICAL LINE (FEMALE) (PORT WING) (LE TO SPAR DISCONNECT)	371-	1
	181-54217-1	•CONNECTOR ASSY - ELECTRICAL LINE (MALE) (PORT WING) (LE TO SPAR DISCONNECT)	371-	1
	172-54066	•CLIP ASSY - ELECTRICAL WING TIP LIGHT DISC• (PORT WING)	371-	1
	AN515B8R8	•SCREW - (PORT WING)	371-	1
	AN365B832	•NUT - (PORT WING)	371-	1
-47	AN3106B18-12S	•PLUG - (PORT WING) (GYRO COMPASS DISC•)	371-	1
	AN3057-10A	•ADAPTER - (PORT WING)	371-	1
	2L7-2	•LUG - SAFETY (NAA) (PORT WING)	371-	1
-48	AN3100A18-12P	•RECEPTACLE - (PORT WING)	371-	1
	AN3057-10A	•ADAPTER - (PORT WING)	371-	4
	AN515-4R7	•SCREW - (PORT WING)	371-	4
	AN365-440	•NUT - (PORT WING)	371-	1
-49	AN960-10	•WASHER - (LE STA 232 GROUND) (PORT WING)	371-	1
-50	10C2D8-19	•CONDUIT - (NAA) (PORT WING)	371-	3
-51	MS21919WDG8	•CLAMP - LOOP TYPE SUPPORT CUSHIONED (PORT)	371-	3
	AN515B8R8	•SCREW - (PORT WING)		

FIGURE AND INDEX NUMBER	GROUP ELECTRICAL EQUIPMENT MAJOR ASSEMBLY EXTENDED SLATTED LEADING EDGE ELECTRICAL EQUIPMENT PART NUMBER	1234567 NOMENCLATURE	CODE	UNITS PER ASSY
169 -	AN365B832	•NUT - (PORT WING)	371-	3
-52	AN931-8-13	•GROMMET - (PORT WING)	371-	1
-53	8C7B8-4	•CONDUIT - ASBESTOS (NAA) (1-PLY) (PORT WING)	371-	1
-54	755-5-2-8	•CLIP - INTEGRALLY BONDED SUPPORT (ADE) (PORT WING)	371-	1
	17C1	•CAP - BONDING CLAMP (NAA) (PORT WING)	371-	1
	AN515B8R8	•SCREW - (PORT WING)	371-	1
	AN365B832	•NUT - (PORT WING)	371-	1
-55	1071	•COUPLER - (LTF) (CONNECTING) (PORT) (FEMALE PORTION)	371-	1
		OR		
	1300	•CONNECTOR - (SMT) (ELECTRICAL) (PORT) (FEMALE PORTION)	371-	
-56	1071	•COUPLER - (LTF) (CONNECTING) (PORT) (MALE PORTION)	371-	1
		OR		
	1300	•CONNECTOR - (SMT) (ELECTRICAL) (PORT) (MALE PORTION)	371-	
-57	181-54217-3	•CONNECTOR ASSY - ELECTRICAL LINE (FEMALE) (STARBOARD WING)	371-	2
	181-54217-1	•CONNECTOR ASSY - ELECTRICAL LINE (MALE) (STARBOARD WING)	371-	2
	172-54066	•CLIP ASSY - ELECTRICAL WING TIP LIGHT DISCONNECT (STARBOARD WING)	371-	1
	AN515-8R8	•SCREW - (STARBOARD WING)	371-	1
	2W18-8L	•WASHER - PLAIN (NAA) (STARBOARD WING)	371-	1
	MS21919WDG4	•CLAMP - LOOP TYPE SUPPORT CUSHIONED (STBD)	371-	4
	AN515-8R8	•SCREW - (STARBOARD WING)	371-	3
	AN365-832	•NUT - (STARBOARD WING)	371-	3
	5C5	•CLAMP - TUBE (NAA) (STARBOARD WING)	371-	3
-58	10C2D14-24-1/2	•CONDUIT - (NAA) (STARBOARD)	371-	1
-59	AN520-10R7	•SCREW - (STARBOARD WING) (PITOT TUBE HEATER & WING TIP LIGHT GROUND)	371-	1
	AN960D10L	•WASHER - (STARBOARD WING)	371-	1
	AN365-1032	•NUT - (STARBOARD WING)	371-	1
-60	1071	•COUPLER - (LTF) (CONNECTING) (MALE PORTION)	371-	1
		OR		
	1300	•CONNECTOR - (SMT) (ELECTRICAL) (STARBOARD) (MALE PORTION)	371-	
-61	1071	•COUPLER - (LTF) (CONNECTING) (FEMALE PORTION)	371-	1
		OR		
	1300	•CONNECTOR - (SMT) (ELECTRICAL) (STARBOARD) (FEMALE PORTION)	371-	

-000-

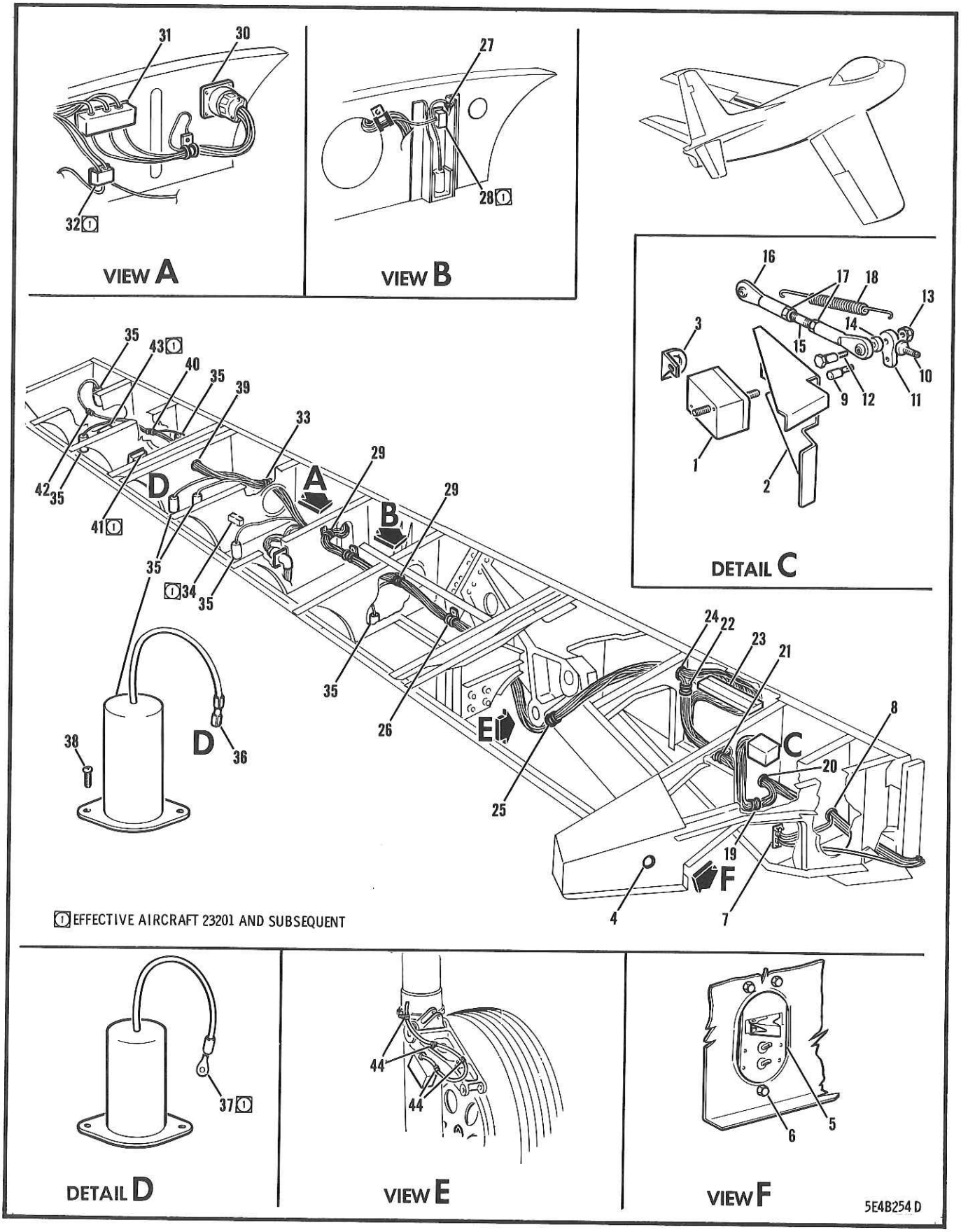

FIGURE 170 WING INBOARD TRAILING EDGE ELECTRICAL EQUIPMENT

FIGURE AND INDEX NUMBER	GROUP ELECTRICAL EQUIPMENT MAJOR ASSEMBLY WING INBOARD TRAILING EDGE ELECTRICAL EQUIPMENT PART NUMBER	1234567 NOMENCLATURE	CODE	UNITS PER ASSY
170 -	170-54014-1	ELECTRICAL EQUIP. INSTL - PORT WING (SEE FIG. 167)	001-610	REF
	13B-50003-1	ELECTRICAL EQUIP. INSTL - PORT WING (SEE FIG. 167)	611-	REF
	170-54014-2	ELECTRICAL EQUIP. INSTL - STARBOARD WING (SEE FIG. 167)	001-610	REF
	13B-50003-2	ELECTRICAL EQUIP. INSTL - STARBOARD WING (SEE FIG. 167)	611-	REF
- 1	152-54201-30	.SWITCH ASSY - ELECTRICAL THREE-UNIT LIMIT (SEE FIG. 187)		REF
	AN515-6-32	.SCREW -		2
	AN365-632	.NUT -		2
- 2	151-54232-1	.BRACKET ASSY - M/LDG/GR UPLOCK SEQUENCE SWITCH MOUNTING PORT WING		1
	151-54232-2	.BRACKET ASSY - M/LDG/GR UPLOCK SEQUENCE SWITCH MOUNTING STARBOARD WING		1
	AN3-4A	.BOLT -		4
- 3	151-54260-1	.CLIP - PORT WING MAIN LANDING GEAR UPLOCK SWITCH BRACKET ATTACHING		1
	151-54260-2	.CLIP - STARBOARD WING MAIN LANDING GEAR UPLOCK SWITCH BRACKET ATTACHING		1
	AN520-10R8	.SCREW -		2
	AN960-10	.WASHER -		2
	AN365-1032	.NUT -		2
- 4	295134-14B	.GROMMET - (MKM) (PLASTIC)		1
- 5	172-54072	.BRACKET ASSY - ELECTRICAL FUEL BOOSTER TEST & GRD DOOR CTL SW (PORT WING)		1
	151-54054	.BRACKET ASSY - ELECTRICAL FUEL TRANSFER TEST SWITCH (STARBOARD WING)		1
	161-54045	.NAME-PLATE - FUEL PUMP & ROCKET JETTISON SWITCH (STARBOARD WING)		1
	AN3227-3	.SWITCH - THREE-HOLE MOUNTING FOUR-POLE TOGGLE (PORT WING)		1
	AN3229-1	.GUARD - (PORT WING)		1
	AN515-6R5	.SCREW - (PORT WING)		2
	AN3022-8	.SWITCH - THREE-HOLE MTG SINGLE-POLE TOGGLE		2
	2B2C14	.BUS-BAR - (NAA) (STARBOARD WING)		1
	AN515-6R5	.SCREW -		4
- 6	AN3-12A	.BOLT -		3
	4S3-10-22	.SPACER - BOLT (NAA)		1
	4S3-10-24	.SPACER - BOLT (NAA)		2
	AN960-10	.WASHER -		3
- 7	AN3436-4-2	.TERMINAL BLOCK ASSY -		1
	AN515-4R7	.SCREW -		1
	AN365-440	.NUT -		2
	AN961-10	.WASHER -		2
	AN936A10B	.WASHER -		2
	AN341-10	.NUT -		2
	398-2	.COVER - ELECTRICAL TERMINAL BLOCK (HEN)	101-	1
- 8	295134-20B	.GROMMET - (MKM) (PLASTIC)		1
- 9	151-54327-5	.EXTENSION - MAIN LANDING GEAR ELECTRICAL SEQUENCE SWITCH SHAFT		1
	AN385-60-4	.PIN -		2
-10	151-54261-7	.STOP - MAIN GEAR UPLOCK SEQUENCE SW (ELEC)		1
	AN345-10	.NUT -		1
	151-54220	.ARM ASSY - M/LDG/GR UPLOCK SEQUENCE SWITCH		1
-11	151-54220-7	..ARM - M/LDG/GR UPLOCK SEQUENCE SWITCH		1
-12	151-54220-9	..PIN - M/LDG/GR UPLOCK SEQUENCE SWITCH ARM		1
-13	AN365-1032	..NUT -		1
-14	4S3-416-7	.SPACER - BOLT (NAA)		1

FIGURE AND INDEX NUMBER	GROUP ELECTRICAL EQUIPMENT MAJOR ASSEMBLY WING INBOARD TRAILING EDGE ELECTRICAL EQUIPMENT PART NUMBER	1234567 NOMENCLATURE	CODE	UNITS PER ASSY
170 -	151-54316	•LINK ASSY - MAIN LANDING GEAR ELECTRICAL SEQUENCE SWITCH ACTUATOR		1
-15	151-54316-3	••ROD - MAIN LANDING GEAR ELECTRICAL SEQUENCE SWITCH ACTUATOR LINK		1
-16	151-54315	••ROD-END ASSY - MAIN LANDING GEAR ELEC SEQUENCE SWITCH ACTUATOR		2
	151-54315-3	•••BAR - MAIN LANDING GEAR ELECTRICAL SEQUENCE SWITCH ACTUATOR		2
	4B16-CP4-6	•••BEARING - SINTERED OIL IMPREGNATED (NAA)		
-17	AN315-3R	••NUT -		2
	AN310-3	•NUT -		2
	AN380-2-2	•PIN -		2
-18	151-54120	•SPRING - M/LDG/GR UPLOCK SEQUENCE SWITCH		2
-19	AN742D8C	•CLAMP - (STA 5)		1
	AN515-8R8	•SCREW -		1
	AN960D8L	•WASHER -		1
	AN365-832	•NUT -		1
-20	295134-16A	•GROMMET - (MKM) (PLASTIC) (STATION 5)		1
	AN742D14C	•CLAMP -		1
	AN515-8R16	•SCREW -		1
	NAS43DD-3-22	•SPACER -		1
	AN365-832	•NUT -		2
	AN931-8-13	•GROMMET -		1
-21	AN742D8C	•CLAMP - (STA 10)		2
	AN742D8	•CLAMP -		1
	AN515-8R8	•SCREW -		1
	AN960D8L	•WASHER -		1
	AN365-832	•NUT -		1
-22	AN742D8CB	•CLAMP - (STA 15)		1
	AN515-8R8	•SCREW -		1
	AN960D8L	•WASHER -		1
	AN365-832	•NUT -		1
-23	**172-54077**	•BLOCK ASSY - REAR WING ELECTRICAL CONN		1
	172-54076	••SUPPORT ASSY - REAR WING ELECTRICAL CONNECTOR BLOCK		1
	40095	••BLOCK - (AMP) (CONNECTOR)		1
	AN515-8R10	••SCREW -		3
	AN365-832	••NUT -		3
	AN960D10L	•WASHER -		3
	AN515-8R8	•SCREW -		3
	AN3-3A	•BOLT -		3
-24	295202-16B	•GROMMET - (MKM) (PLASTIC) (STATION 16)		1
-25	AN742D12C	•CLAMP - (STA 18)		1
	AN3-6A	•BOLT -		1
	AN365-1032	•NUT -		1
-26	AN742D12C	•CLAMP - (STA 40)		1
	NAS43DD-3-22	•SPACER -		1
	AN515-8R12	•SCREW -		1
	AN365-832	•NUT -		1
-27	AN742D4C	•CLAMP - (STA 47)		1
	AN515-8R8	•SCREW -		1
	AN365-832	•NUT -		1
-28	AN3436-2-1	•TERMINAL BLOCK ASSY - (STA 47)		1
	AN515-4R6	•SCREW -	201-	1
	AN365-440	•NUT -	201-	2
	AN961-6	•WASHER -	201-	2
	AN936A6B	•WASHER -	201-	1
	AN341-6	•NUT -	201-	1
	397-1	•COVER - ELECTRICAL TERMINAL BLOCK (HEN)	201-	1
-29	AN742D9C	•CLAMP - (STA 47 & 56)	201-	1
				2

FIGURE AND INDEX NUMBER	GROUP ELECTRICAL EQUIPMENT MAJOR ASSEMBLY WING INBOARD TRAILING EDGE ELECTRICAL EQUIPMENT PART NUMBER	1234567 NOMENCLATURE	CODE	UNITS PER ASSY
170 -	AN520-8R12	•SCREW -		2
	AN365-832	•NUT -		2
-30	AN3100A18-10S	•RECEPTACLE - (WING FLAP ACTUATOR CONTROL)		1
	AN3057-10A	•ADAPTER -		1
	AN515-4R8	•SCREW -		4
	AN960C4	•WASHER -		4
	AN365-440	•NUT -		4
	9E1-1-8	•EXTRUSION - PLASTIC (NAA)		4
	AN515-8R8	•SCREW - (STA 56) (WING FLAP ACTUATOR GRD)		1
	AN960D8L	•WASHER -		1
	AN365-832	•NUT -		1
-31	AN3436-4-3	•TERMINAL BLOCK ASSY - (STA 56)		1
	AN515-4R7	•SCREW -		2
	AN365-440	•NUT -		2
	AN961-10	•WASHER -		3
	AN936A10B	•WASHER -		3
	AN341-10	•NUT -		3
	398-3	•COVER - ELECTRICAL TERMINAL BLOCK (HEN)	201-	1
-32	AN3436-2-2	•TERMINAL BLOCK ASSY - (STA 56)	201-	1
	AN515-4R6	•SCREW -	201-	2
	AN365-440	•NUT -	201-	2
	AN961-6	•WASHER -	201-	2
	AN936A6B	•WASHER -	201-	2
	AN341-6	•NUT -	201-	2
	397-2	•COVER - ELECTRICAL TERMINAL BLOCK (HEN)	201-	1
-33	AN742D7C	•CLAMP - (STA 68)		1
	AN515-8R8	•SCREW -		1
	AN365-832	•NUT -		1
-34	AN3436-2-2	•TERMINAL BLOCK ASSY - (STA 68)	201-	1
	AN515-4R6	•SCREW -	201-	2
	AN365-440	•NUT -	201-	2
	AN961-6	•WASHER -	201-	2
	AN936A6B	•WASHER -	201-	2
	AN341-6	•NUT -	201-	2
	397-2	•COVER - ELECTRICAL TERMINAL BLOCK (HEN)	201-	1
-35	140-54110	•RECEPTACLE ASSY - ELECTRICAL ROCKET MOUNT REAR (STA 47 & 56 & 62 & 70 & 75 & 83 & 90 & 100)	001-200	8
	140-54110-10	•RECEPTACLE ASSY - ELEC ROCKET MOUNT REAR	201-	8
	140-54111	••SPRING - ELECTRICAL ROCKET MOUNT RECP		1
	140-54112	••SLEEVE - ELECTRICAL ROCKET MOUNT RECP		1
	140-54113	••INSULATOR - ELECTRICAL ROCKET MOUNT RECP		1
	140-54114	••BASE - ELECTRICAL ROCKET MOUNT RECEPTACLE		1
-36	35619	••PLUG - (AMP) (DISCONNECT)	001-200	1
-37	AN659-1	••TERMINAL -	201-	1
	2W1P16-24-062	••WASHER - PLAIN (NAA)		1
-38	AN515-8R6	•SCREW -		16
	AN935-8	•WASHER -	001-610	16
	AN935-8L	•WASHER -	611-	16
-39	AN931-6-10	•GROMMET - (STA 76)		2
-40	AN742D5C	•CLAMP - (STA 86)		1
	AN515-8R8	•SCREW -		1
	AN365-832	•NUT -		1
-41	AN3436-2-1	•TERMINAL BLOCK ASSY - (STA 86)	201-	1
	AN515-4R6	•SCREW -	201-	2
	AN365-440	•NUT -	201-	2
	AN961-6	•WASHER -	201-	1
	AN936A6B	•WASHER -	201-	1
	AN341-6	•NUT -	201-	1
	397-1	•COVER - ELECTRICAL TERMINAL BLOCK (HEN)	201-	1

FIGURE AND INDEX NUMBER	GROUP ELECTRICAL EQUIPMENT MAJOR ASSEMBLY WING INBOARD TRAILING EDGE ELECTRICAL EQUIPMENT PART NUMBER	1234567 NOMENCLATURE	CODE	UNITS PER ASSY
170 -42	AN742D4C	•CLAMP - (STA 96)		1
	AN515-8R8	•SCREW -		1
	AN365-832	•NUT -		1
-43	AN3436-2-2	•TERMINAL BLOCK ASSY - (STA 96)	201-	1
	AN515-4R6	•SCREW -	201-	2
	AN365-440	•NUT -	201-	2
	AN961-6	•WASHER -	201-	2
	AN936A6B	•WASHER -	201-	2
	AN341-6	•NUT -	201-	2
	397-2	•COVER - ELECTRICAL TERMINAL BLOCK (HEN)	201-	1
-44	AN742D6C	•CLAMP - (LANDING GEAR SAFETY-SWITCH) (AS PER EO 05-5E-6A/186)		4
	AN520-10R9	•SCREW -		1
	AN365-1032	•NUT -		1
		(CONTINUED SEE FIG. 168)		

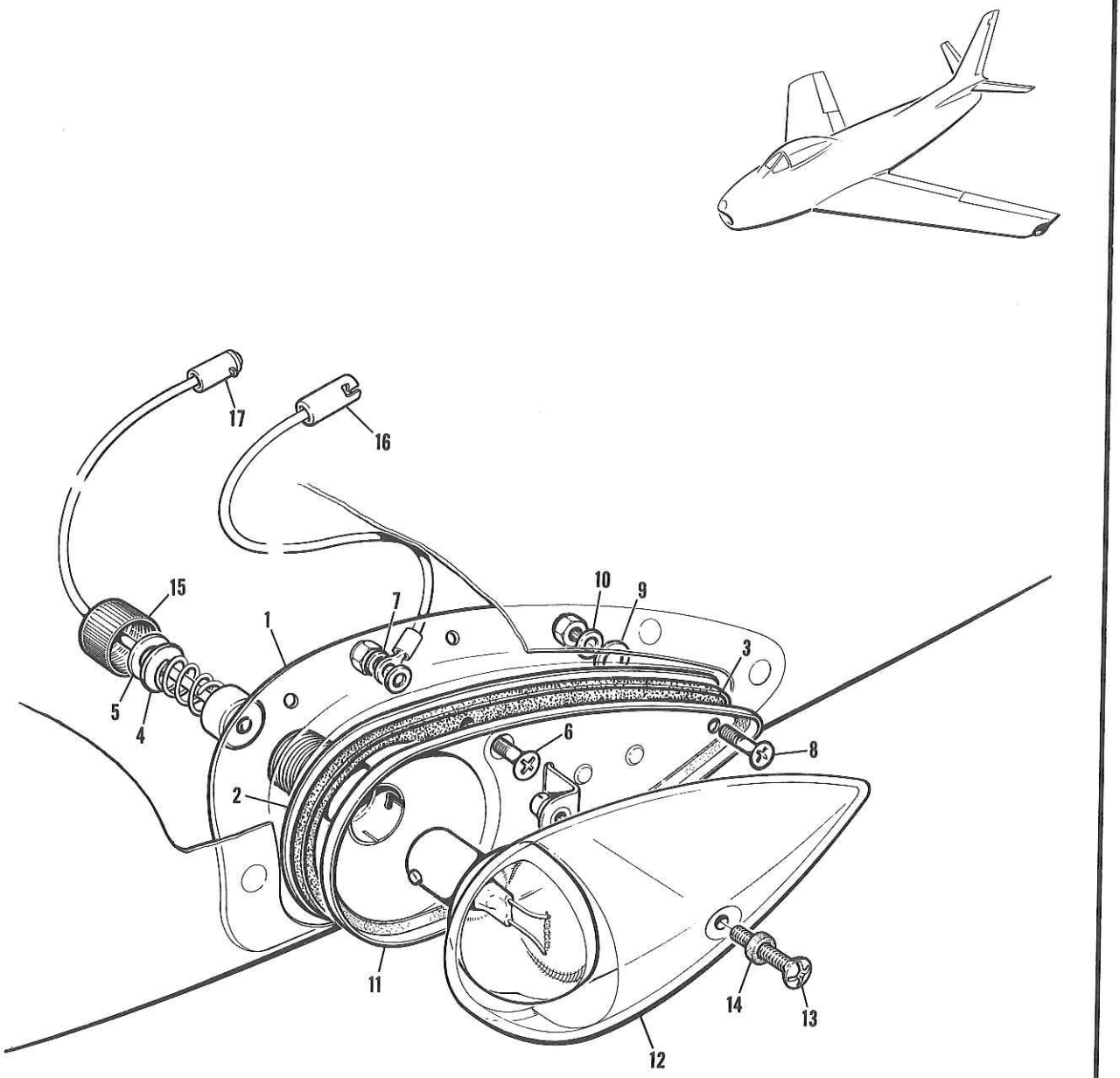

FIGURE 171 WING TIP ELECTRICAL EQUIPMENT

FIGURE AND INDEX NUMBER	GROUP / MAJOR ASSEMBLY / PART NUMBER	ELECTRICAL EQUIPMENT / WING TIP ELECTRICAL EQUIPMENT / 1234567 NOMENCLATURE	CODE	UNITS PER ASSY
171 -	172-14713-1	TIP ASSY - PORT WING EXTN 6-3 LEADING EDGE (SEE SECTION 1)		REF
	172-14713-2	TIP ASSY - STARBOARD WING EXTENDED 6-3 LE (SEE SECTION 1)		REF
				1
- 1	165-14503-2	•MOUNT - WING TIP LIGHT EXTERNAL		AR
	AN960D4L	•WASHER -		1
- 2	13B-53046	•BACKING-PLATE - (AS PER EO 05-5E-6A/219)		1
- 3	13B-53040	•SEAL - ANTI-VIBRATION (AS PER EO 05-5E-6A/219)		1
- 4	2W1B24-20-62	•WASHER - PLAIN (NAA)		1
- 5	2W1SR14-20-62	•WASHER - PLAIN (NAA)		1
- 6	AN507B632R10	•SCREW - (AS PER EO 05-5E-6A/241)		1
- 7	AN960B6	•WASHER - (AS PER EO 05-5E-6A/241)		1
	AN365B632	•NUT -		2
- 8	AN507B632R10	•SCREW -		2
- 9	S-1246B22-17-032	•WASHER - (AS PER EO 05-5E-6A/219)		2
-10	2W1B10-17-032	•WASHER -		3
	AN365B632	•NUT -		1
	AN3033-7	•LIGHT ASSY - WING TIP POSITION (PORT)		1
	AN3033-8	•LIGHT ASSY - WING TIP POSITION (STARBOARD)		1
-11	AN3122-1524	••LAMP -		1
	AN889-2	••GASKET -		1
-12	AN3042-3	••COVER - (RED) (PORT WING)		1
	AN3042-4	••COVER - (GREEN) (STARBOARD WING)		1
-13	AN507-632R12	••SCREW -		1
-14	AN899-1	••GASKET -		1
-15	AN3054-5	••NUT -		1
-16	1071	•COUPLER - (LTF) (CONNECTING) (FEMALE PORTION)		1
-17	1071	•COUPLER - (LTF) (CONNECTING) (MALE PORTION)		1

-000-

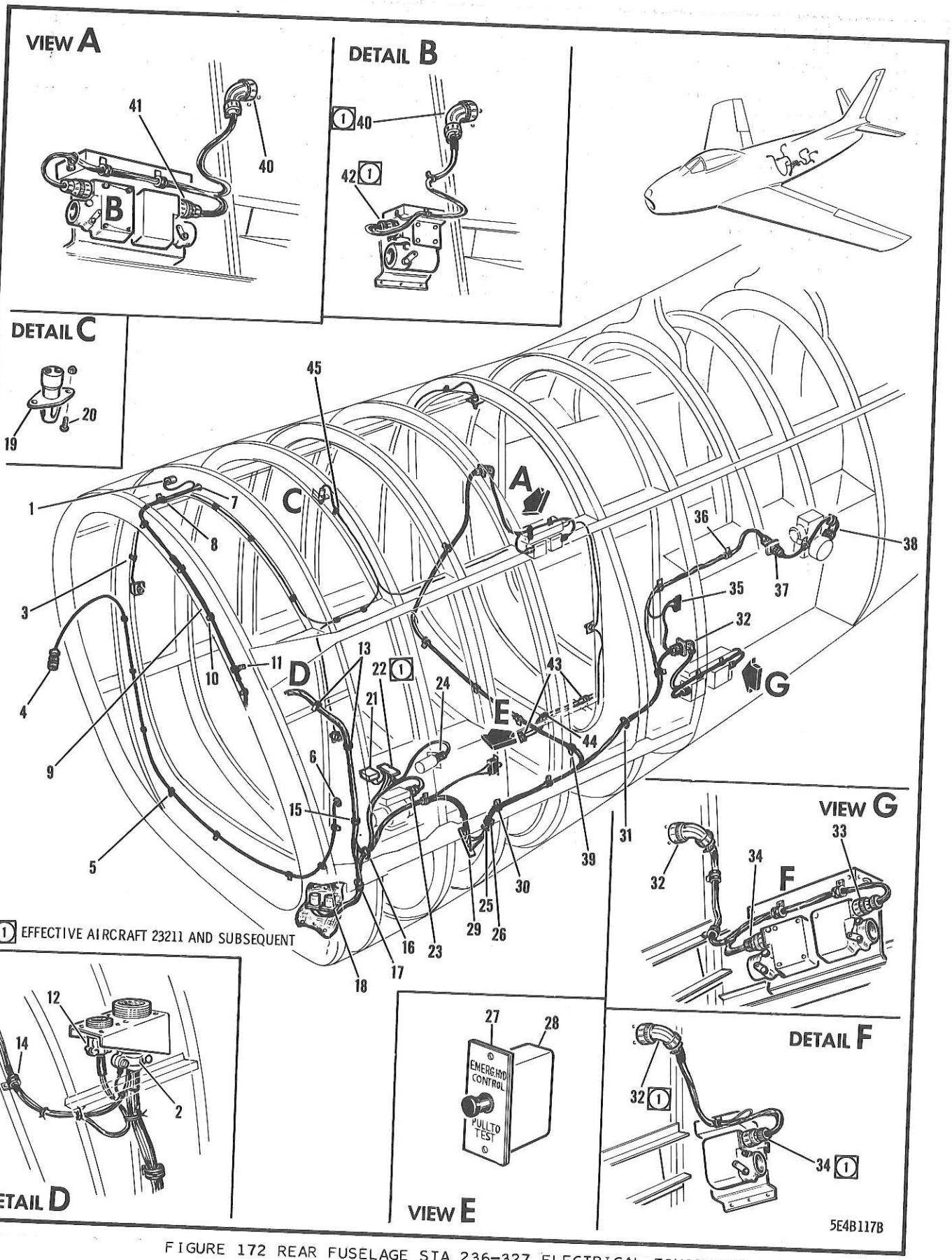

FIGURE 172 REAR FUSELAGE STA 236-327 ELECTRICAL EQUIPMENT

FIGURE AND INDEX NUMBER	GROUP ELECTRICAL EQUIPMENT MAJOR ASSEMBLY REAR FUSELAGE STA 236-327 ELECTRICAL EQUIPMENT PART NUMBER	1234567 NOMENCLATURE	CODE	UNITS PER ASSY
172 -	170-54131	ELECTRICAL EQUIP. INSTL - FUS REAR SECTION (SEE SECTION 3)		NP
		•CONDUIT - ELEC REAR FUS STA 244-341 (PORT)		1
- 1	140-54135	•RECEPTACLE - (AS PER EO 05-5E-6B/3)		1
- 2	AN3100A32-6P	•ADAPTER -		1
	AN3057-20	•SCREW - (AS PER EO 05-5E-6B/3)	001-120	4
	AN515-8R8	•SCREW - (ADAPTER TO RECEPTACLE)	121-	4
	AN515-6R8	•NUT - (AS PER EO 05-5E-6B/3)	001-120	4
	AN365-832	•NUT -	121-	4
	AN365-632	•JUMPER - WIRE (NAA)		1
	1J1-1A2-4	•CLIP - INTEGRALLY BONDED SUPPORT (ADE)		1
	755-3-2-6	•LUG - SAFETY (NAA)	201-	1
	2L7-2	•SCREW -		1
	AN515-6R6	•NUT -		1
	AN365-632	•CLAMP -		4
- 3	AN742D7C	•SCREW -		3
	AN515-8R7	•SCREW -		1
	AN515-8R12	•SPACER -	001-100	1
	NAS43-3-16	•SPACER -	101-	1
	NAS43DD3-16	•NUT -		4
	AN365-832	•CLAMP -	002-	2
	AN742D6C	•SCREW -	002-	2
	AN520-8R12	•NUT -	002-	2
	AN365-832	•PLUG - (EMY HYD PUMP MANUAL OVERRIDE)	001-210	1
- 4	AN3106B16-12P	•ADAPTER -	001-210	1
	AN3057-8A	•WASHER - PLAIN (NAA)	001-210	1
	2W1P23-26-62	•CLAMP -	001-210	8
- 5	AN742D8C	•SCREW -	001-210	8
	AN515-8R7	•NUT -	001-210	8
	AN365-832	•GROMMET - (MKM) (PLASTIC)	001-210	1
- 6	295134-8A	•GROMMET - (MKM) (PLASTIC)	001-210	1
- 7	295202-8A	•GROMMET - (MKM) (PLASTIC)	211-	1
	295202-10A	•CLAMP - ELECTRICAL HARNESS (TAI)		1
- 8	TA710-7	•SCREW -		2
	AN515-8R7	•NUT -		2
	AN365-832	•CONDUIT - (NAA)	001-100	2
- 9	10C2C7-17	•CONDUIT - (NAA)	101-	1
	8C7B7-15	•CLAMP - ELECTRICAL HARNESS (TAI)		1
-10	TA710-10	•SCREW -		3
	AN515-8R7	•NUT -		3
	AN365-832	•CLIP - (NAA)		2
-11	2C33	•SCREW -		1
	AN515-8R8	•NUT -		1
	AN365-832	•RECEPTACLE - (AS PER EO 05-5E-6B/4)		1
-12	AN3100A16S1P	•ADAPTER -		1
	AN3057-8A	•SCREW - (ADAPTER TO RECEPTACLE) (AS PER EO 05-5E-6B/4)		4
	AN515-4R8	•NUT - (AS PER EO 05-5E-6B/4)		4
	AN365-440	•CLAMP -		2
-13	AN742D14C	•SCREW -		2
	AN515-8R8	•NUT -		2
	AN365-832	•CLAMP - (AS PER EO 05-5E-6B/3)		1
-14	AN742D9C	•SCREW - (AS PER EO 05-5E-6B/3)		1
	AN515-8R8	•NUT - (AS PER EO 05-5E-6B/3)		1
	AN365-832	•CLAMP -		1
-15	AN742D17C	•SCREW -		1
	AN515-8R8	•NUT -		1
	AN365-832	•GROMMET -		1
-16	AN931-14-20	•CLAMP -		1
-17	AN742D18C	•SCREW -		1
	AN515-8R8			

FIGURE AND INDEX NUMBER	GROUP ELECTRICAL EQUIPMENT MAJOR ASSEMBLY REAR FUSELAGE STA 236-327 ELECTRICAL EQUIPMENT PART NUMBER	1234567 NOMENCLATURE	CODE	UNITS PER ASSY
172 -	AN365-832	•NUT -		1
-18	AN3370-1	•RELAY - SPST 200-AMP UNSEALED		2
	NAS44-616P2	•BUS-BAR -		1
	AN520-416R10	•SCREW -		4
	AN960-416	•WASHER -		4
	172-54073-800	•COVER ASSY - ELECTRICAL EMY HYD PUMP RELAY (AS PER EO 05-5E-6B/2)		1
-19	35534-2	•THERMOCOUPLE - DETECTION (ETA)		13
		OR		
	36010-2	•THERMOCOUPLE - DETECTION (ETA)		
-20	AN515-8R8	•SCREW - (THERMOCOUPLE ATTACHING)		
	AN365-832	•NUT -		26
-21	CP53B2EB405K	•CAPACITOR - SIDE TERMINAL (SEC)		26
	AN515-8R7	•SCREW -		1
	AN365-832	•NUT -		2
-22	3T3-5-2	•TERMINAL BLOCK ASSY - ELECTRICAL (NAA)		2
		OR	211-	1
	AN3436-6-2	•TERMINAL BLOCK ASSY - ELECTRICAL		
	AN3433-6-2	•BUS-BAR -	211-	
	AN515-6R7	•SCREW - (BUS-BAR TO TERMINAL BLOCK)	211-	1
	AN365-632	•NUT -	211-	2
	AN961-416	•WASHER -	211-	2
	AN936A416B	•WASHER -	211-	2
	AN341-416	•NUT -	211-	2
	AN781-3	•NIPPLE -	211-	2
	AN515-6R6	•SCREW - (HYDRAULIC EMERGENCY PUMP GROUND)	211-	2
	AN365-632	•NUT -		1
-23	AN3106B20-19S	•PLUG - (HYDRAULIC PUMP)		1
	AN3057-12	•ADAPTER -		1
-24	AN3106B14S2S	•PLUG - (EMY HYDRAULIC PRESS. TRANSMITTER)		1
	AN3057-6	•ADAPTER -		1
-25	AN931-12-23	•GROMMET -		1
-26	AN742D12C	•CLAMP -		1
	AN515-8R8	•SCREW -		1
	AN365-832	•NUT -		1
-27	170-54029	•NAME-PLATE - ELEC EMY HYD CONTROL CKT/BKR		1
-28	AN3161-P10	•CIRCUIT-BREAKER - P/B NON-TRIP FREE		1
	AN515-6R6	•SCREW -		1
-29	AN3436-2-9	•TERMINAL BLOCK ASSY - ELECTRICAL		2
	AN3433-2-2	•BUS-BAR -		1
	AN515-4R6	•SCREW - (BUS-BAR TO TERMINAL BLOCK)		3
	AN365-440	•NUT -		2
	AN960-6L	•WASHER -		2
	AN935-6	•WASHER -		9
	AN340-6	•NUT -		9
	397-9	•COVER - ELECTRICAL TERMINAL BLOCK (HEN)		9
-30	AN742D9C	•CLAMP -		1
	AN520-10R7	•SCREW -		4
	AN365-1032	•NUT -		4
-31	295134-10C	•GROMMET - (MKM) (PLASTIC)		4
-32	AN3108B14S6P	•PLUG - (PORT SIDE)		1
	AN3100A14S6S	•RECEPTACLE - (PORT SIDE)		1
	AN3057-6A	•ADAPTER - (PORT SIDE)		1
	AN3057-6	•ADAPTER - (PORT SIDE)		1
	AN515-4R8	•SCREW - (PORT SIDE)		1
	AN365-440	•NUT - (PORT SIDE)		4
	AN742D6C	•CLAMP - (PORT SIDE)		4
	AN742D15C	•CLAMP - (PORT SIDE)		4
	AN515-8R8	•SCREW -		2
	AN365-832	•NUT -		4
				4

FIGURE AND INDEX NUMBER	GROUP ELECTRICAL EQUIPMENT MAJOR ASSEMBLY REAR FUSELAGE STA 236-327 ELECTRICAL EQUIPMENT PART NUMBER	1234567 NOMENCLATURE	CODE	UNITS PER ASSY
172 -33	AN3106B12S3S	•PLUG - (PORT SIDE) (HYD PRESSURE SWITCH)	001-210	1
-34	AN3106B12S3S	•PLUG - (PORT SIDE) (HYD PRESSURE SWITCH)	001-210	1
	AN3054-4	•NUT - (PORT SIDE)		1
	AN3054-4	•NUT - (PORT SIDE)		1
	2W1SR14-20-62	•WASHER - PLAIN (NAA) (PORT SIDE)	001-210	1
	2W1SR14-20-62	•WASHER - PLAIN (NAA) (PORT SIDE)		1
	2W1P24-18-63	•WASHER - PLAIN (NAA) (PORT SIDE)	001-210	2
	2W1P24-18-63	•WASHER - PLAIN (NAA) (PORT SIDE)		1
	AN515-8R8	•SCREW - (PORT SIDE)	001-210	1
	AN365-832	•NUT - (PORT SIDE)	001-210	1
-35	AN3436-2-2	•TERMINAL BLOCK ASSY - ELECTRICAL		1
	AN3433-2-2	•BUS-BAR -		1
	AN515-4R8	•SCREW -		2
	AN365-440	•NUT -		2
	397-2	•COVER - ELECTRICAL TERMINAL BLOCK (HEN)	101-	1
-36	AN742D8C	•CLAMP -		3
	AN515-8R8	•SCREW -		3
	AN365-832	•NUT -		3
-37	AN3106B14S6P	•PLUG -	001	1
	AN3108B1436P	•PLUG -	002-	1
	AN3100A14S6S	•RECEPTACLE -		1
	AN3057-6A	•ADAPTER -		1
	AN3057-6	•ADAPTER -		1
	AN515-4R8	•SCREW -		4
	AN365-440	•NUT -		4
-38	AN3108B10SL4S	•PLUG - (EMERGENCY SOLENOID VALVE)		1
	AN3057-4	•ADAPTER -		1
-39	AN742D8C	•CLAMP -		5
	AN742D10C	•CLAMP -		1
	AN520-10R7	•SCREW -		3
	AN520-10R10	•SCREW -		3
	NAS43DD3-12	•SPACER -		3
	AN365-1032	•NUT -		5
	AN3100A14S6S	•RECEPTACLE - (PORT SIDE)		1
-40	AN3108B14S6P	•PLUG - (PORT SIDE)		1
	AN3057-6	•ADAPTER - (PORT SIDE)		1
	AN515-4R8	•SCREW - (PORT SIDE)		4
	AN365-440	•NUT -		4
-41	AN3106B12S3S	•PLUG - (STBD SIDE) (HYD PRESSURE SWITCH)	001-210	1
-42	AN3106B12S3S	•PLUG - (STBD SIDE) (HYD PRESSURE SWITCH)		1
	2W1SR14-20-62	•WASHER - PLAIN (NAA) (STARBOARD SIDE)	001-210	1
	2W1SR14-20-62	•WASHER - PLAIN (NAA) (STARBOARD SIDE)		1
	2W1P24-18-63	•WASHER - PLAIN (NAA) (STARBOARD SIDE)	001-210	1
	2W1P24-18-63	•WASHER - PLAIN (NAA) (STARBOARD SIDE)		1
	AN3054-4	•NUT - (STARBOARD SIDE)		2
	AN3054-4	•NUT - (STARBOARD SIDE)		1
	AN742D24C	•CLAMP - (STARBOARD SIDE)		1
	AN742D15C	•CLAMP - (STARBOARD SIDE)		2
	AN742D6C	•CLAMP - (STARBOARD SIDE)		5
	AN515-8R10	•SCREW - (STARBOARD SIDE)		1
	AN515-8R8	•SCREW - (STARBOARD SIDE)		4
	AN365-832	•NUT - (STARBOARD SIDE)		5
-43	AN742D6C	•CLAMP -		2
	AN515-8R8	•SCREW -		2
	AN365-832	•NUT -		2
-44	AN742D6C	•CLAMP - (STA 270)	002-	1
	NAS43DD3-24	•SPACER -	002-	1
	AN520-10R18	•SCREW -	002-	1
	AN960-10	•WASHER -		1
	AN365D1032	•NUT -	002-	1

FIGURE AND INDEX NUMBER	GROUP ELECTRICAL EQUIPMENT MAJOR ASSEMBLY REAR FUSELAGE STA 236-327 ELECTRICAL EQUIPMENT PART NUMBER	1234567 NOMENCLATURE	CODE	UNITS PER ASSY
172 -45	AN742D9C AN515-8R8 AN365-832	•CLAMP - •SCREW - •NUT - (CONTINUED SEE FIG. 173)		1 1 1

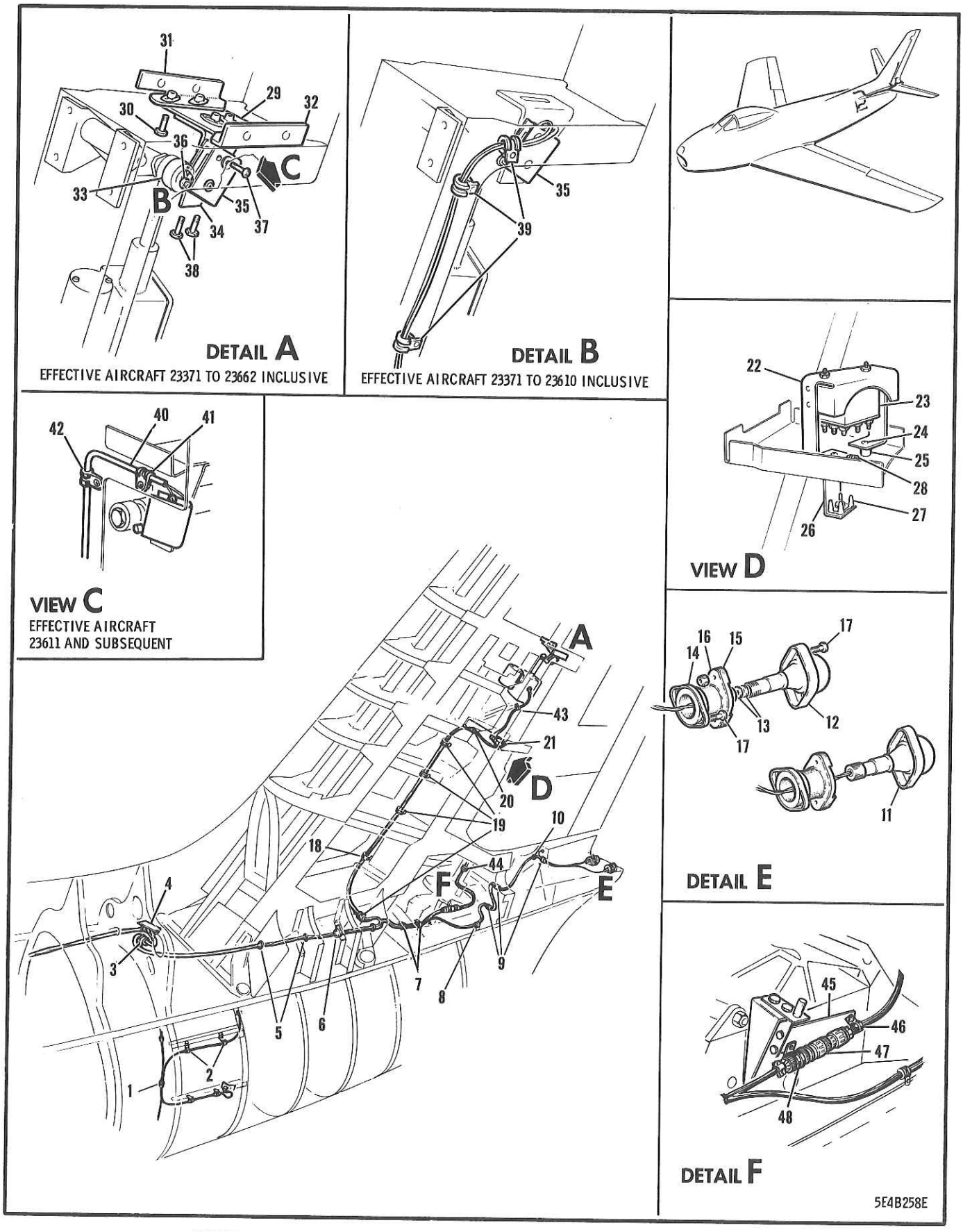

FIGURE 173 REAR FUSELAGE STA 327-410 ELECTRICAL EQUIPMENT

FIGURE AND INDEX NUMBER	GROUP ELECTRICAL EQUIPMENT MAJOR ASSEMBLY REAR FUSELAGE STA 327-410 ELECTRICAL EQUIPMENT PART NUMBER	1234567 NOMENCLATURE	CODE	UNITS PER ASSY
173 -	170-54131	ELECTRICAL EQUIP. INSTL - FUSELAGE REAR SECTION (SEE FIG. 172)		REF
- 1	TA716-S2HT	•CLAMP - LOOP TYPE CUSHIONED (TAI)	001-300	24
	TA716-S3HT	•CLAMP - LOOP TYPE CUSHIONED (TAI)	301-660	16
	TA716-S3HT	•CLAMP - LOOP TYPE CUSHIONED (TAI)	661-	26
	TA716-S3HT	•CLAMP - LOOP TYPE CUSHIONED (TAI)	001-300	37
	TA716-S5HT	•CLAMP - LOOP TYPE CUSHIONED (TAI)	301-660	40
	TA716-S4HT	•CLAMP - LOOP TYPE CUSHIONED (TAI)	661-	45
	AN515-8R8	•SCREW -	001-300	61
	AN515-8R8	•SCREW -	301-660	56
	AN515-8R8	•SCREW -	661-	71
	AN960D8L	•WASHER -	001-300	61
	AN960D8L	•WASHER -	301-660	56
	AN960D8L	•WASHER -	661-	71
	AN365-832	•NUT -	001-300	61
	AN365-832	•NUT -	301-660	56
	AN365-832	•NUT -	661-	71
	295202-8A	•GROMMET - (MKM) (PLASTIC)		4
	295202-8C	•GROMMET - (MKM) (PLASTIC)		4
- 2	AN742D5C	•CLAMP -		2
	NAS43DD3-64	•SPACER -		2
	AN520-10R28	•SCREW -		2
	AN960-10	•WASHER -		2
	AN365D1032	•NUT -		2
- 3	AN742D7C	•CLAMP -		1
	AN515-8R8	•SCREW -		1
- 4	AN3436-2-6	•TERMINAL BLOCK ASSY - ELECTRICAL (AS PER EO 05-5E-6B/4)	001-210	1
	AN3436-2-12	•TERMINAL BLOCK ASSY - ELECTRICAL	211-	1
	AN515-4R8	•SCREW -		2
	AN365-440	•NUT -		2
	AN961-6	•WASHER -	001-210	6
	AN961-6	•WASHER -	211-	12
	AN936A6B	•LOCK-WASHER -	001-210	6
	AN936A6B	•LOCK-WASHER -	211-	12
	AN341-6	•NUT -	001-210	6
	AN341-6	•NUT -	211-	12
	397-6	•COVER - ELECTRICAL TERMINAL BLOCK (HEN) (AS PER EO 05-5E-6B/4)	001-210	1
	397-12	•COVER - ELECTRICAL TERMINAL BLOCK (HEN)	211-	1
- 5	AN931-8-20	•GROMMET -	001-200	2
	AN931-10-20	•GROMMET -	201-	2
- 6	AN742D8C	•CLAMP -		2
	AN515-8R8	•SCREW -		2
	AN365-832	•NUT -		2
- 7	AN742D8C	•CLAMP -		2
	AN515-8R12	•SCREW -		1
	AN515-8R8	•SCREW -		1
	NAS43DD3-16	•SPACER -		1
	AN365-832	•NUT -		1
- 8	AN742D6C	•CLAMP -		1
	AN509-8R8	•SCREW -		1
	AN365-832	•NUT -		1
- 9	AN742D6C	•CLAMP -		3
	AN515-8R8	•SCREW -		2
	AN365-832	•NUT -		2
	AN742D6C	•CLAMP -		1
	NAS43DD3-16	•SPACER -		1
	AN365-832	•NUT -		1
-10	AN931-6-10	•GROMMET -		1
-11	AN3158-1	•LIGHT ASSY - TAIL POSITION (YELLOW)	001-210	1
-12	AN3158-2	•LIGHT ASSY - TAIL POSITION (WHITE)		1
-13	2W1B24-20-62	•WASHER - PLAIN (NAA)	001-210	2
	2W1B24-20-62	•WASHER - PLAIN (NAA)	211-	1

FIGURE AND INDEX NUMBER	GROUP ELECTRICAL EQUIPMENT MAJOR ASSEMBLY REAR FUSELAGE STA 327-410 ELECTRICAL EQUIPMENT PART NUMBER	1234567 NOMENCLATURE	CODE	UNITS PER ASSY
173 -	2W1SR14-20-62	•WASHER - PLAIN (NAA)	001-210	2
	2W1SR14-20-62	•WASHER - PLAIN (NAA)	211-	1
-14	13B-53042-2	•PLATE - RETAINING (AS PER EO 05-5E-6A/219)	001-210	2
	13B-53042-2	•PLATE - RETAINING (AS PER EO 05-5E-6A/219)	211-	1
-15	13B-53043	•SHOCK-MOUNT - (AS PER EO 05-5E-6A/219)	001-210	2
	13B-53043	•SHOCK-MOUNT - (AS PER EO 05-5E-6A/211)	211-	1
-16	13B-53042-4	•PLATE - RETAINING (AS PER EO 05-5E-6A/219)	001-210	2
	13B-53042-4	•PLATE - RETAINING (AS PER EO 05-5E-6A/219)	211-	1
-17	AN515-4R8	•SCREW - (AS PER EO 05-5E-6A/219)	001-210	8
	AN515-4R8	•SCREW - (AS PER EO 05-5E-6A/219)	211-	4
	AN365-440	•NUT -	001-210	4
	AN365-440	•NUT -	211-	2
-18	AN742D6C	•CLAMP -		1
	AN509-8R9	•SCREW -		1
	AN960D8L	•WASHER -		1
	AN365-832	•NUT -		1
-19	AN742D6C	•CLAMP -		4
	AN507-632R7	•SCREW -		2
	AN515-6R7	•SCREW -		1
	AN515-8R7	•NUT -		1
	AN365-632	•NUT -		3
	AN365-832	•CLAMP -		1
-20	AN742D6C	•CLAMP -		1
-21	AN742D6C	•SCREW -		1
	AN515-8R8	•WASHER -		1
	AN960D8L	•NUT -		1
	AN365-832	•BRACKET - RELAY LONGITUDINAL TRIM (AS PER EO 05-5E-6A/200)		1
-22	13B-53030	•RELAY ASSY - 10-AMP RESISTIVE 29-VDC (LRC) (AS PER EO 05-5E-6B/4)		1
-23	237-EAU	•SCREW - (AS PER EO 05-5E-6A/200)		3
-24	AN515-6R7	•NUT - (AS PER EO 05-5E-6A/200)		5
	AN365-632	•COVER ASSY - ELECTRICAL RELAY (AS PER EO 05-5E-6B/4)		1
	151-54428-802	•SPACER -		2
-25	NAS43-4-24	•BRACKET - Z LONGITUDINAL TRIM (AS PER EO 05-5E-6A/200)		1
-26	13B-53031	•WASHER - (AS PER EO 05-5E-6A/200)		5
	AN960-6L	•SCREW -		2
	AN515-6R14	•TERMINAL BLOCK ASSY - ELECTRICAL (AS PER EO 05-5E-6B/4)		1
-27	AN3436-2-1	•SCREW - (AS PER EO 05-5E-6A/200)		2
	AN515-4R5	•WASHER - (AS PER EO 05-5E-6A/200)		2
	AN960-4L	•NUT -		2
	AN365-440	•WASHER -		1
	AN961-6	•LOCK-WASHER -		1
	AN936A6B	•NUT -		1
	AN341-6	•COVER - ELECTRICAL TERMINAL BLOCK (HEN) (AS PER EO 05-5E-6B/4)		1
	397-1	•CLAMP - (AS PER EO 05-5E-6B/4)		1
-28	AN742-8	•SCREW -		1
	AN505-8R8	•WASHER -		1
	AN960-8L	•NUT -		1
	AN365-832	•PLATE - HORIZONTAL STAB. TRIM TAKE-OFF IND LIGHT SWITCH (AS PER EO 05-5E-6B/14)	371-662	1
-29	202-54705	•BOLT - (AS PER EO 05-5E -6B/14)	371-662	4
-30	AN3-4A	•WASHER - PLAIN(NAA)(AS PER EO 05-5E-6B/14)	371-662	4
	2W18-10	•CLIP - HORIZONTAL STAB. TRIM TAKE-OFF IND LIGHT SWITCH PLATE (STARBOARD SIDE) (AS PER EO 05-5E-6B/14)	371-662	1
-31	202-54707	•CLIP - HORIZONTAL STAB. TRIM TAKE-OFF IND LIGHT SWITCH PLATE (PORT SIDE) (AS PER EO 05-5E-6B/14)	371-662	1
-32	202-54708			

FIGURE AND INDEX NUMBER	GROUP / MAJOR ASSEMBLY / PART NUMBER	ELECTRICAL EQUIPMENT / REAR FUSELAGE STA 327-410 ELECTRICAL EQUIPMENT / 1234567 NOMENCLATURE	CODE	UNITS PER ASSY
173 -33	202-54709	•CAM - HORIZONTAL STABILIZER TRIM TAKE-OFF IND LIGHT SW (AS PER EO 05-5E-6B/14)	371-662	1
-34	202-54704-800	•SWITCH ASSY - HOR/STAB TRIM TAKE-OFF IND LIGHT (FOR UP• CODE SEE FIG• 121) (AS PER EO 05-5E-6B/14)	371-662	1
	13B-53023	••SUPPORT - HORIZONTAL STAB• TRIM TAKE-OFF IND LIGHT SW (AS PER EO 05-5E-6B/14)	371-662	1
-35	AN3234-1	••SWITCH - CLASS E LIMIT	371-662	1
-36	JV5	••ACTUATOR - V3 SWITCH (MSC)	371-662	1
	181-520184	••INSULATOR - ELECTRICAL AN3234-1 SWITCH	371-662	2
	AN960-4	••WASHER - (BETWEEN SWITCH & SUPPORT)	371-662	2
-37	AN515-4R12	••SCREW -	371-662	4
	2W18-4L	••WASHER - PLAIN (NAA)	371-662	2
	AN365-440	••NUT -	371-610	2
-38	AN3-4A	•BOLT - (AS PER EO 05-5E-6B/14)	611-662	2
	AN3-5A	•BOLT -	371-610	2
	2W18-10M	•WASHER - PLAIN(NAA)(AS PER EO 05-5E-6B/14)	611-622	2
	2W18-10	•WASHER - PLAIN (NAA)	371-610	3
-39	MS21919WDG3	•CLAMP - LOOP TYPE CUSHIONED SUPPORT (AS PER EO 05-5E-6B/14)	371-610	3
	AN507-8R8	•SCREW - (AS PER EO 05-5E-6B/14)	371-610	3
	NAS43DD3-8	•SPACER - (AS PER EO 05-5E-6B/14)	371-610	3
	AN364-832	•NUT - (AS PER EO 05-5E-6B/14)	611-	2
-40	10C2B16-2	•CONDUIT - HORIZONTAL STABILIZER TRIM TAKE-OFF INDICATOR LIGHT SWITCH(NAA)	611-	1
-41	TA710-4	•CLAMP - ELECTRICAL HARNESS (TAI)	611-	1
	AN507-832R7	•SCREW -	611-	1
	2W1AL-12-12-40	•WASHER - PLAIN (NAA)	611-	1
	AN365-832	•NUT -	611-	1
-42	TA710-3	•CLAMP - ELECTRICAL HARNESS (TAI)	611-	1
	NAS43DD3-8	•SPACER -	611-	1
	AN507-832R8	•SCREW -	611-	1
	AN365-832	•NUT -		1
-43	2C33	•CLIP - (NAA)		1
	AN742D6C	•CLAMP -		1
	AN515-8R8	•SCREW -		1
	AN960D8L	•WASHER -		1
	AN365-832	•NUT -		1
-44	AN742D7C	•CLAMP -		1
-45	13-50066	•BRACKET - ELECTRICAL RUDDER DISCONNECT		2
	AN515-8R8	•SCREW - (BRACKET ATTACHING)		2
	AN365-832	•NUT -		1
-46	2C16-5	•CLIP - CONDUIT (NAA)		1
	AN515-6R7	•SCREW -		1
	AN365-632	•NUT -		1
-47	AN3101A14S5S	•RECEPTACLE - (RUDDER DISCONNECT)		1
	AN3057-6	•ADAPTER -		1
-48	AN742D18CB	•CLAMP -		1
	1J1-1A1A4	•JUMPER - WIRE (NAA)		1
	755-3-2-6	•CLIP - INTEGRALLY BONDED SUPPORT (ADE)		1
	AN515-6R6	•SCREW -		1
	AN365-632	•NUT -		1

-000-

FIGURE AND INDEX NUMBER	PART NUMBER	1234567 NOMENCLATURE	CODE	UNITS PER ASSY
		THIS PAGE DELETED		

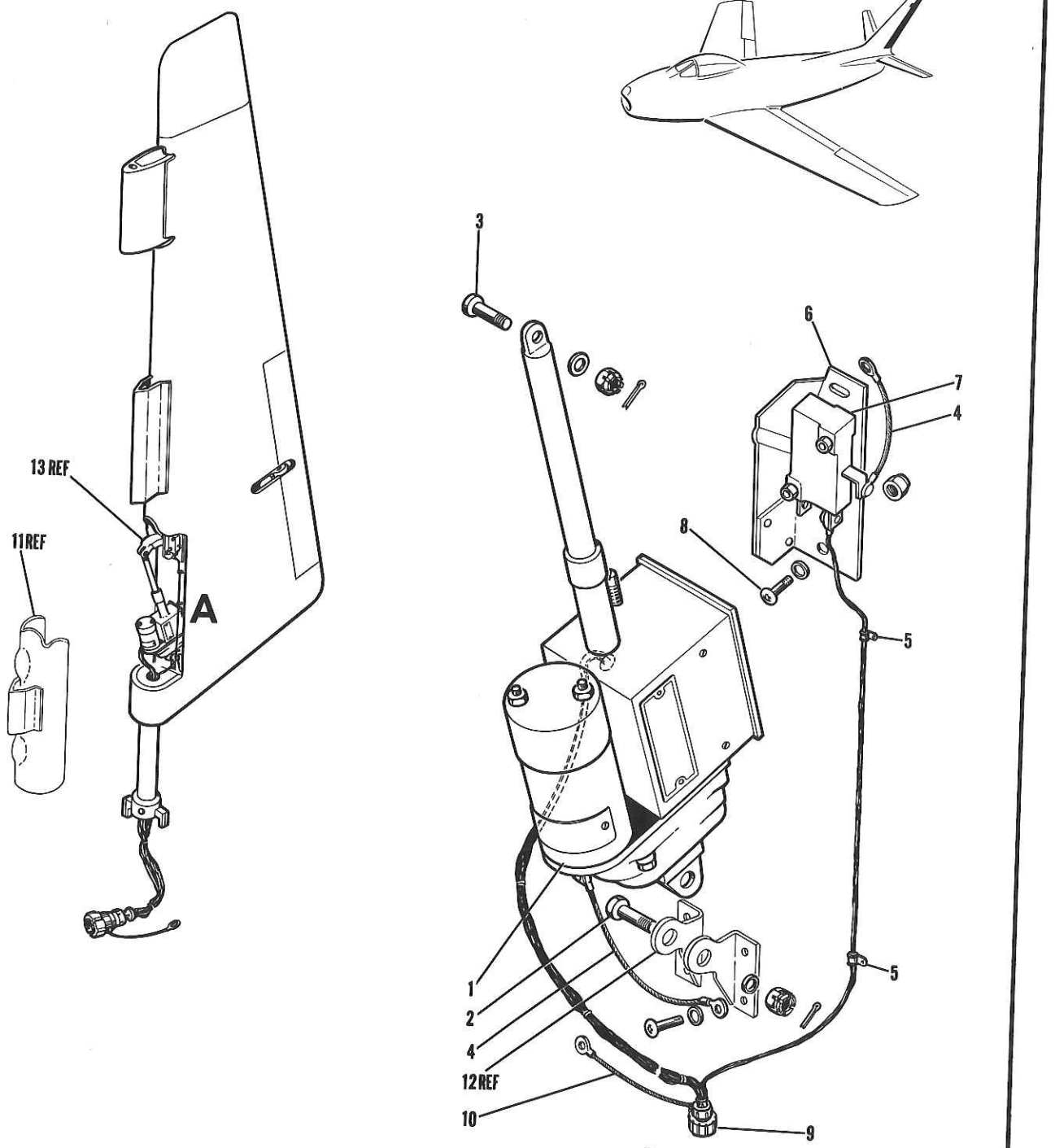

FIGURE 174 RUDDER ELECTRICAL EQUIPMENT

FIGURE AND INDEX NUMBER	GROUP ELECTRICAL EQUIPMENT MAJOR ASSEMBLY RUDDER ELECTRICAL EQUIPMENT PART NUMBER	1234567 NOMENCLATURE	CODE	UNITS PER ASSY
174 -	151-54144	ELECTRICAL EQUIP. INSTL - RUDDER (SEE SECTION 2)		NP
- 1	31296	•ACTUATOR ASSY - RUDDER ADJUSTING (ARM) (WITH FILTER, WIRES & HARNESS CLAMP)		1
- 2	AN4-6	•BOLT - (ACTUATOR TO BRACKET ATTACHING)		1
	AN960-416L	•WASHER -		1
	AN310-4	•NUT -		1
	AN380-2-3	•PIN -		1
- 3	AN24-16	•BOLT - (ACTUATOR ROD TO RUDDER TRIM TAB BELL-CRANK)		1
	AN960-416L	•WASHER -		1
	AN320-4	•NUT -		1
	AN380-2-3	•PIN -		2
	31770	•TERMINAL - (ARM)		1
	31882	•TERMINAL - (ARM)		2
- 4	AN749-1-4	•JUMPER -		2
	AN515-6R6	•SCREW -		2
	AN365-632	•NUT -		3
- 5	49138	•FASTENER - WIRING (UCF)		1
	151-54147	•SWITCH ASSY - RUDDER TRIM TAB NEUTRAL POSN INDICATING		1
- 6	151-54147-3	••BRACKET ASSY - RUDDER TRIM TAB NEUTRAL POSITION INDICATING SWITCH		1
	151-54146	•••BRACKET - TRIM TAB NEUTRAL POSN IND SW		1
	151-54145	•••SPRING - TRIM TAB NEUTRAL POSITION INDICATOR SWITCH ACTUATING		1
	AN3234-1	••SWITCH ASSY - CLASS E LIMIT		1
	152-54208	••SHIELD - ELECTRICAL THREE-UNIT LIMIT SW		2
- 7	AN507-440-11	••SCREW - (SWITCH TO BRACKET ATTACHING)		2
	AN960-4L	••WASHER -		2
	AN365-440	••NUT -		2
- 8	AN515-6R8	•SCREW -		3
	AN960-6L	•WASHER -		2
	AN365-632	•NUT -		1
- 9	AN3106-14S5P	•PLUG -		1
	AN3057-6	•ADAPTER -		1
	755-4-2-6	•CLIP - INTEGRALLY BONDED SUPPORT (ADE)		1
-10	1J1-1A1A4	•JUMPER - WIRE (NAA)		1
	AN515-6R6	•SCREW -		1
	AN365-632	•NUT -		1
-11	140-24100	DOOR ASSY - RUDDER TRIM TAB ACTUATOR ACCESS (SEE SECTION 2)		REF
-12	140-24513-1	BRACKET - RUDDER TRIM TAB ACTUATOR SUPPORT STARBOARD SIDE (SEE SECTION 2)		REF
-13	172-24516	FITTING ASSY - RUDDER TRIM TAB BELL-CRANK (SEE SECTION 2)		REF

-000-

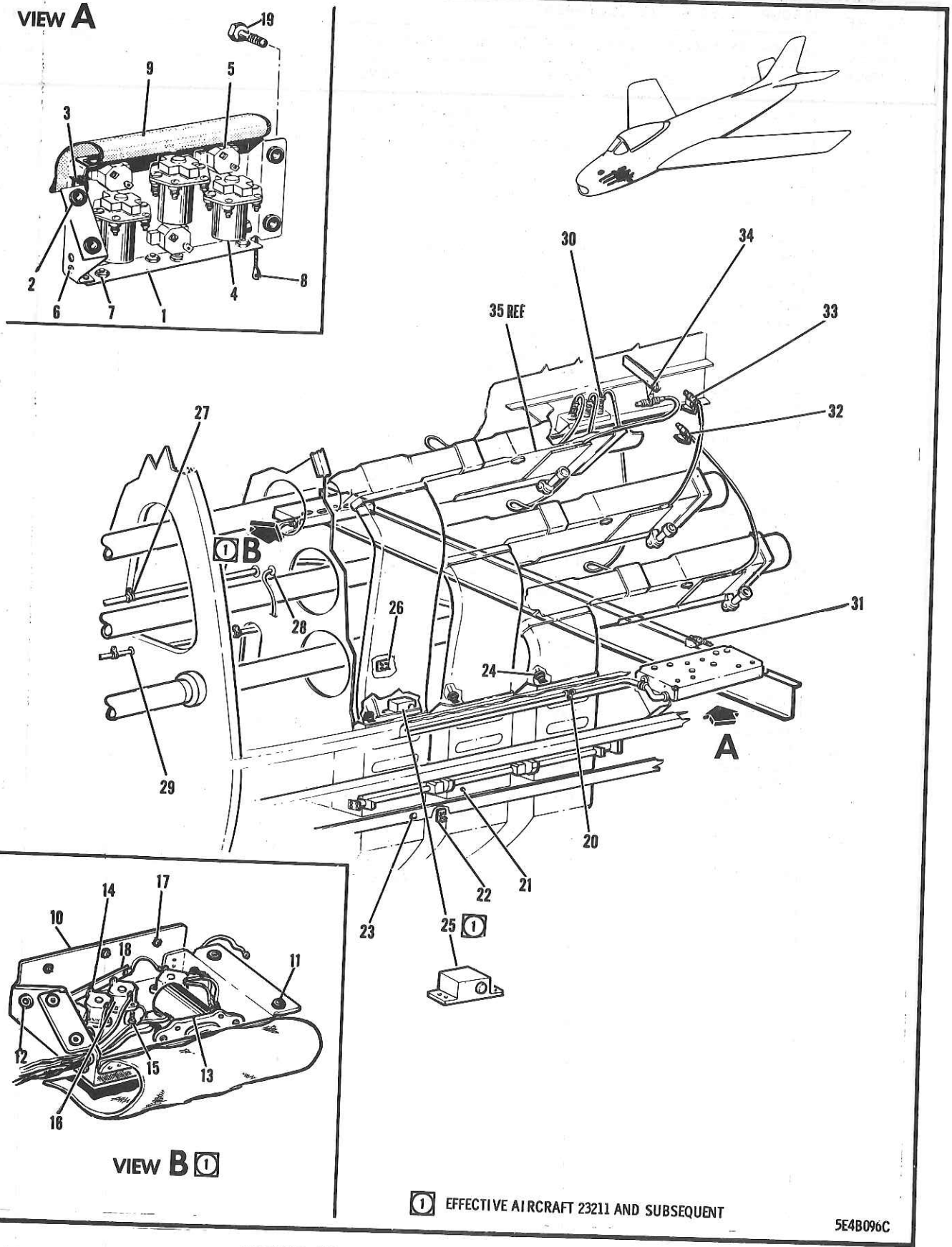

FIGURE 175 ARMAMENT ELECTRICAL EQUIPMENT

FIGURE AND INDEX NUMBER	GROUP ELECTRICAL EQUIPMENT MAJOR ASSEMBLY ARMAMENT ELECTRICAL EQUIPMENT PART NUMBER	1234567 NOMENCLATURE	CODE	UNITS PER ASSY
175 -	191-54031	ELECTRICAL EQUIP. INSTL - FORWARD FUSELAGE (SEE FIG. 152)		REF
	161-54037-1	.BRACKET ASSY - AMMUNITION BOOSTER MOTOR ELECTRICAL CKT/BKR & RELAY PORT SIDE	001-100	1
	161-54037-801	.BRACKET ASSY - AMMUNITION BOOSTER MOTOR ELECTRICAL CKT/BKR & RELAY PORT SIDE	101-210	1
	161-54037-4	.BRACKET ASSY - AMMUNITION BOOSTER MOTOR ELECTRICAL CKT/BKR & RELAY STBD SIDE	001-100	1
	161-54037-802	.BRACKET ASSY - AMMUNITION BOOSTER MOTOR ELECTRICAL CKT/BKR & RELAY STBD SIDE	101-210	1
- 1	161-54038-1	..BRACKET - AMMUNITION BOOSTER MOTOR ELEC CIRCUIT-BREAKER & RELAY PORT SIDE	001-210	1
	161-54038-4	..BRACKET - AMMUNITION BOOSTER MOTOR ELEC CIRCUIT-BREAKER & RELAY STBD SIDE	001-210	1
- 2	AN931-6-10	..GROMMET -	001-210	4
- 3	AN931-10-14	..GROMMET -	001-210	1
- 4	AN3350-1	..RELAY - 50-AMP SPST UNSEALED	001-210	3
	AN520-10R7	..SCREW - (RELAY TO BRACKET ATTACHMENT)	001-210	6
	AN365-1032	..NUT -	001-210	6
- 5	PDA-35	..CIRCUIT-BREAKER - AUTOMATIC RESET (STC)	001-210	3
	AN515-6R12	..SCREW - (CIRCUIT-BREAKER TO BRACKET ATT)	001-210	6
	AN365-632	..NUT -	001-210	6
- 6	755-7-2-6	..CLIP - INTEGRALLY BONDED SUPPORT (ADE)	001-210	1
	AN515-6R7	..SCREW -	001-210	2
	AN365-632	..NUT -	001-210	2
- 7	AN227-10	..STUD -	001-210	3
	AN364-1032	..NUT -	001-210	3
- 8	10B1C3-3-4	..JUMPER - BONDING (NAA)	001-100	1
	AN515-8R7	..SCREW -	001-100	1
	AN515-8R9	..SCREW -	101-210	1
	AN960-8	..WASHER -	101-210	1
	AN365-832	..NUT -	001-210	1
- 9	161-54039-800	..COVER ASSY - AMMUNITION BOOSTER MOTOR ELEC CIRCUIT-BREAKER & RELAY (AS PER EO 05-5E-6B/2)	001-210	1
	2W1-2-14-032	..WASHER - PLAIN (NAA) (STARBOARD SIDE)	001-210	8
	140-61092	..BAG ASSY - FIXED .50-CALIBRE GUN CHARGER STOWAGE	001-210	1
	13A-50023	.BRACKET ASSY - AMMUNITION BOOSTER MOTOR ELEC CIRCUIT-BREAKER & RELAY (STBD)	211-	1
-10	161-54038-104	..BRACKET - AMMUNITION BOOSTER MOTOR ELEC CIRCUIT-BREAKER & RELAY STBD SIDE		1
-11	AN931-6-10	..GROMMET -		4
-12	AN931-10-14	..GROMMET -		1
-13	AN3370-1	..RELAY - 200-AMP SPST UNSEALED		1
	AN520-10R7	..SCREW - (RELAY TO BRACKET ATTACHING)		2
	AN365-1032	..NUT -		2
-14	PDA-35	..CIRCUIT-BREAKER - AUTOMATIC RESET (STC)		4
-15	AN515-6R12	..SCREW - (CIRCUIT-BREAKER TO BRACKET ATT)		8
	AN365-632	..NUT -		8
-16	755-7-2-6	..CLIP - INTEGRALLY BONDED SUPPORT (ADE)		1
	AN515-6R7	..SCREW - (CLIP TO BRACKET ATTACHING)		1
	AN365-632	..NUT -		1
-17	AN227-10	..STUD -		3
	AN364-1032	..NUT -		3
-18	2B1B-9-3	..BUS-BAR - (NAA)		1
	AN515-8R9	..SCREW - (ATT NM22A18 GROUND JUMPER)		1
	AN960-8	..WASHER -		2
	AN365-832	..NUT -		1
	AN3-12A	.BOLT - (AMMUNITION BOOSTER MOTOR RELAY & CIRCUIT-BREAKER PANEL ATTACHING)	001-210	6

FIGURE AND INDEX NUMBER	GROUP ELECTRICAL EQUIPMENT MAJOR ASSEMBLY ARMAMENT ELECTRICAL EQUIPMENT PART NUMBER	1234567 NOMENCLATURE	CODE	UNITS PER ASSY
175 -	AN3-12A	•BOLT - (AMO BOOSTER RELAY & CKT/BKR PANEL ATTACHING STARBOARD SIDE)	211-	3
-19	AN3-13A	•BOLT - (AMMUNITION BOOSTER RELAY & CIRCUIT-BREAKER PANEL ATTACHING)	001-210	2
	AN3-13A	•BOLT - (AMO BOOSTER MOTOR RELAY & CKT/BRK PANEL ATTACHING STARBOARD SIDE)	211-	1
	4S3-10-16	•SPACER - BOLT (NAA)	001-210	8
	4S3-10-16	•SPACER - BOLT (NAA)	211-	4
	4S3-10-10	•SPACER - BOLT (NAA)	001-210	8
	4S3-10-10	•SPACER - BOLT (NAA)	211-	4
	2W1-13-26-42	•WASHER - PLAIN (NAA)	001-210	16
	2W1-13-26-42	•WASHER - PLAIN (NAA)	211-	8
-20	AN742D7CB	•CLAMP -		2
	AN742D8CB	•CLAMP - (STARBOARD SIDE)		1
	AN742D10CB	•CLAMP -		2
	TA710-14	•CLAMP - ELEC HARNESS (TAI) (PORT SIDE)		1
	AN515-8R6	•SCREW -		6
	AN365-832	•NUT -		6
-21	AN931-4-7	•GROMMET -		2
-22	AN3436-2-3	•TERMINAL BLOCK ASSY - ELECTRICAL	001-210	1
	AN515-4R6	•SCREW - (TERMINAL BLOCK)	001-210	2
	AN365-440	•NUT -	001-210	2
	AN961-6	•WASHER -	001-210	3
	AN936A6B	•WASHER -	001-210	3
	AN341-6	•NUT -	001-210	3
	397-3	•COVER - ELECTRICAL TERMINAL BLOCK (HEN)	101-210	1
-23	AN931-4-7	•GROMMET -	001-210	1
-24	AN3108B14S2S	•PLUG - (AMO BOOSTER)	001-210	6
	AN3108B14S2S	•PLUG - (AMO BOOSTER)	211-	4
	AN3057-6A	•ADAPTER -	001-210	6
	AN3057-6A	•ADAPTER -	211-	4
	AN742D6CB	•CLAMP -	001-210	6
	AN742D6CB	•CLAMP -	211-	4
	1J1-1A2-4	•JUMPER - WIRE (NAA)	001-210	6
	1J1-1A2-4	•JUMPER - WIRE (NAA)	211-300	4
	1J1-1A2-3	•JUMPER - WIRE (NAA)	301-	4
	AN742D5CB	•CLAMP -	301-	2
	2L7-2	•LUG - SAFETY (NAA)	001-210	6
	2L7-2	•LUG - SAFETY (NAA)	211-	4
	AN515-6R6	•SCREW -	001-210	6
	AN515-6R6	•SCREW -	211-300	4
	AN515-8R6	•SCREW -	301-	2
	AN365-632	•NUT -	001-210	6
	AN365-632	•NUT -	211-300	4
	AN365-832	•NUT -	301-	2
	AN515-8R6	•SCREW -	001-210	6
	AN515-8R6	•SCREW -	211-	4
	AN365-832	•NUT -	001-210	6
	AN365-832	•NUT -	211-	4
-25	AN3436-2-1	•TERMINAL BLOCK ASSY - ELECTRICAL (AS PER EO 05-5E-6A/69)	001-210	2
	AN515-8R7	•SCREW - (AS PER EO 05-5E-6A/69)	001-210	4
	AN365-832	•NUT - (AS PER EO 05-5E-6A/69)	001-210	4
	AN961-6	•WASHER - (AS PER EO 05-5E-6A/69)	001-210	2
	AN936A6B	•WASHER - (AS PER EO 05-5E-6A/69)	001-210	2
	397-1	•COVER - ELECTRICAL TERMINAL BLOCK (HEN) (AS PER EO 05-5E-6A/69)	001-210	2
	AN341-6	•NUT - (AS PER EO 05-5E-6A/69)	001-210	2
-26	AN3436-2-1	•TERMINAL BLOCK ASSY - ELECTRICAL	001-210	2
	AN3436-2-1	•TERMINAL BLOCK ASSY - ELECTRICAL (STARBOARD SIDE)	211-	1

FIGURE AND INDEX NUMBER	GROUP ELECTRICAL EQUIPMENT MAJOR ASSEMBLY ARMAMENT ELECTRICAL EQUIPMENT PART NUMBER	1234567 NOMENCLATURE	CODE	UNITS PER ASSY
175 -	AN515-4R6	•SCREW - (TERMINAL BLOCK ATTACHING)	001-210	4
	AN515-4R6	•SCREW - (TERMINAL BLOCK ATT STBD SIDE)	211-	2
	AN365-440	•NUT -	001-210	4
	AN365-440	•NUT - (STARBOARD SIDE)	211-	2
	AN961-6	•WASHER -	001-210	2
	AN961-6	•WASHER -	211-	1
	AN936A6B	•WASHER -	001-210	2
	AN936A6B	•WASHER - (STARBOARD SIDE)	211-	1
	AN341-6	•NUT -	001-210	2
	AN341-6	•NUT - (STARBOARD SIDE)	211-	1
	397-1	•COVER - ELECTRICAL TERMINAL BLOCK (HEN)	101-210	2
	397-1	•COVER - ELECTRICAL TERMINAL BLOCK (HEN) (STARBOARD SIDE)	211-	1
-27	2C33	•CLIP - (NAA)		5
	AN742D7CB	•CLAMP -		1
	1J1-2-2-7	•JUMPER - WIRE (NAA)		1
	AN931-6-10	•GROMMET -		1
	AN931-14-20	•GROMMET -		3
	AN931-16-22	•GROMMET -		3
	295134-20A	•GROMMET - (MKM) (PLASTIC)		1
	TA710-7	•CLAMP - ELECTRICAL HARNESS (TAI)		4
	TA710-12	•CLAMP - ELECTRICAL HARNESS (TAI)		3
	AN515-8R7	•SCREW -		3
	AN515-8R8	•SCREW -		4
	AN365-832	•NUT -		7
-28	295202-12A	•GROMMET - (MKM) (PLASTIC)		1
-29	295134-12A	•GROMMET - (MKM) (PLASTIC) (STARBOARD SIDE) (EMERGENCY HYDRAULIC WIRING)		3
	TA710-10	•CLAMP - ELECTRICAL HARNESS (TAI) (EMERGENCY HYDRAULIC WIRING)		4
	AN515-8R8	•SCREW -		4
	AN365-832	•NUT - (STARBOARD SIDE)		4
-30	AN3102A12S3S	•RECEPTACLE - (GUN HEATER DISCONNECT)		6
	2L7-2	•LUG - SAFETY (NAA)	301-	6
	AN515-4R5	•SCREW -		24
	AN960D4L	•WASHER -		24
	AN365-440	•NUT -		24
	TA710-7	•CLAMP - ELECTRICAL HARNESS (TAI)		4
	TA710-8	•CLAMP - ELECTRICAL HARNESS (TAI)		2
	AN515-10R8	•SCREW -		2
	AN960-10L	•WASHER -		2
	AN365-1032	•NUT - (GUN HEATER DISCONNECT)		2
	AN515-8R8	•SCREW -		4
	AN365-832	•NUT -		4
-31	AN3101A14S2S	•RECEPTACLE - (GUN CHARGER)	001-490	6
	AN3106B10SL4S	•PLUG - (VALVE PNEUMATIC)	491-	6
	AN3057-6A	•ADAPTER -	001-490	6
	AN3057-4A	•ADAPTER - (VALVE PNEU)	491-	6
	AN960D8L	•WASHER -		4
	TA710-14	•CLAMP - ELECTRICAL HARNESS (TAI)		6
	2L7-2	•LUG - SAFETY (NAA)	301-	6
	TA710-3	•CLAMP - ELECTRICAL HARNESS (TAI)	491-	3
	AN515-8R8	•SCREW -	491-	3
	AN365-832	•NUT -	491-	3
	AN515-8R8	•SCREW -		2
	AN515-8R12	•SCREW -		2
	AN365-832	•NUT -		4
-32	170-54099	•CLIP - •50-CALIBER GUN PNEU CHARGER PLUG (STARBOARD SIDE)	001-490	1
	AN3-4A	•BOLT -	001-490	2

FIGURE AND INDEX NUMBER	GROUP ELECTRICAL EQUIPMENT MAJOR ASSEMBLY ARMAMENT ELECTRICAL EQUIPMENT PART NUMBER	1234567 NOMENCLATURE	CODE	UNITS PER ASSY
175 -	AN960D10L	•WASHER -	001-490	2
	AN365-1032	•NUT -	001-490	2
-33	170-54099	•CLIP - •50-CALIBER GUN PNEU CHARGER PLUG (PORT SIDE)	001-490	1
	AN3-4A	•BOLT -	001-490	4
	AN960D10L	•WASHER -	001-490	4
	AN365-1032	•NUT -	001-490	4
-34	170-54099	•CLIP - •50-CALIBER GUN PNEU CHARGER PLUG (PORT SIDE)	001-490	1
	170-54099-951	•CLIP - •50-CALIBER GUN PNEU CHARGER PLUG (STARBOARD SIDE)	001-490	1
	AN3-4A	•BOLT -	001-490	4
	AN960D10L	•WASHER -	001-490	4
	AN365-1032	•NUT -	001-490	4
	9E1-3-12	•EXTRUSION - PLASTIC (NAA) (PORT SIDE)	001-200	2
	SPEC AMS3240	•EXTRUSION - RUBBERCRAFT (686 X 3-3/4) (PORT SIDE)	201-	2
	9E1-3-12	•EXTRUSION - PLASTIC (NAA) (STARBOARD SIDE)	001-200	1
	SPEC AMS3240	•EXTRUSION - RUBBERCRAFT (686 X 3-3/4) (STARBOARD SIDE)	201-	1
-35	890100	CHARGER - (KCI) (AUTOMATIC GUN TYPE B1) (SEE SECTION 20)		REF

-000-

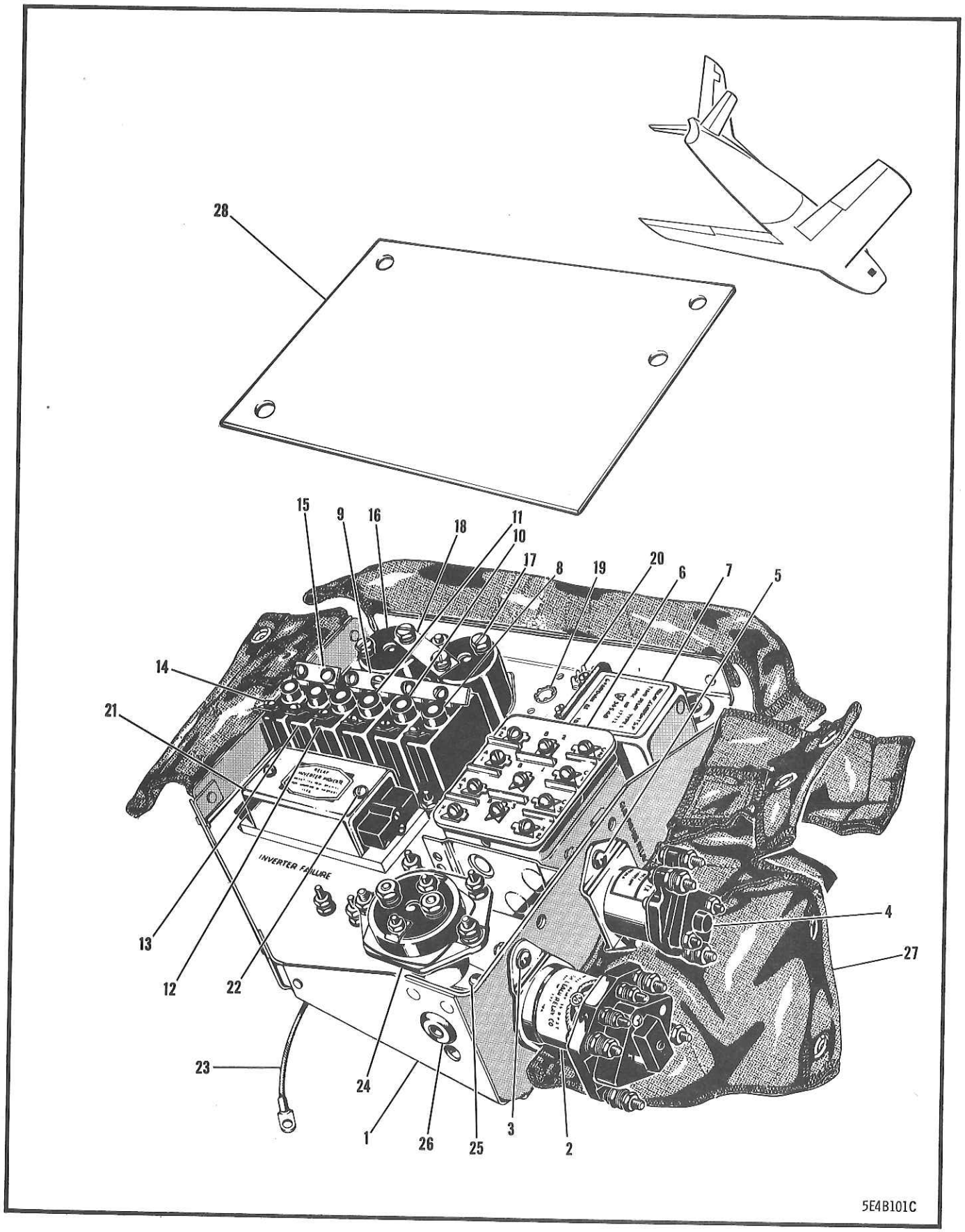

FIGURE 176 ELECTRICAL RELAY STA 26 STARBOARD SIDE PANEL

FIGURE AND INDEX NUMBER	GROUP / MAJOR ASSEMBLY / PART NUMBER	ELECTRICAL EQUIPMENT / ELECTRICAL RELAY STA 26 STARBOARD SIDE PANEL / 1234567 NOMENCLATURE	CODE	UNITS PER ASSY
176 -	172-54129-800	PANEL ASSY - ELECTRICAL RELAY FUS STA 26 (STARBOARD SIDE) (SEE FIG. 153)	001-210	1
	172-54129-802	PANEL ASSY - ELECTRICAL RELAY FUS STA 26 (STARBOARD SIDE)	211-300	1
	172-54129-804	PANEL ASSY - ELECTRICAL RELAY FUS STA 26 (STARBOARD SIDE)	301-490	1
	172-54129-806	PANEL ASSY - ELECTRICAL RELAY FUS STA 26 (STARBOARD SIDE)	491-	1
- 1	172-54128	•BASE ASSY - ELECTRICAL FUS STA 26 RELAY	001-210	1
	172-54128-800	•BASE ASSY - ELECTRICAL FUS STA 26 RELAY	211-490	1
	172-54128-802	•BASE ASSY - ELECTRICAL FUS STA 26 RELAY	491-	1
	48151	••BUTTON - STANDARD TYPE PLUG (UCF)	211-	1
- 2	AN3352-1	•RELAY - 55-AMP 2PST UNSEALED (GUN HEATER)		1
- 3	AN515-8R10	•SCREW - (GUN HEATER RELAY TO BASE ATT)		2
- 4	AN3350-2	•RELAY - 50-AMP SPST UNSEALED (GUN-FIRING)		1
- 5	AN515-8R10	•SCREW - (GUN-FIRING RELAY TO BASE ATT)		2
- 6	AN3312-1	•RELAY - 10-AMP 3PDT SEALED(GUNSIGHT POWER)		1
	AN515-8R8	•SCREW - (GUNSIGHT POWER RELAY TO BASE ATT)		4
- 7	SPEC 32439A	•RELAY - (GEM) (TYPE B9A 15-AMP SPST) (WINDSHIELD DE-ICER)	001-210	1
	AN515-6R4	•SCREW - (WINDSHIELD DE-ICER RELAY TO BASE ATTACHING)	001-210	4
	AN936A6	•WASHER -	001-210	4
- 8	AN3161-P5	•CIRCUIT-BREAKER - PUSH-BUTTON NON-TRIP FREE (AMO GUN HEATER CONTROL)	001-210	1
- 9	2B1-10-4	•BUS-BAR - (NAA) (AMO GUN HEATER CONTROL)	001-490	1
	2B1-10-2	•BUS-BAR - (NAA) (MANUAL GUN CHARGING & NOSE STEERING)	491-	1
	AN515-6R6	•SCREW - (CIRCUIT-BREAKERS TO BASE ATT)	001-490	14
	AN515-6R6	•SCREW - (CIRCUIT-BREAKERS TO BASE ATT)	491-	12
-10	PSA-25	•CIRCUIT-BREAKER - AUTOMATIC RESET (STC) (GUN FIRING)(AS PER EO 05-5E-6A/255)	001-490	1
	AN526C832R6	•SCREW - (JUMPER TO CIRCUIT-BREAKER ATT)	001-490	1
	AN365-832	•NUT -	001-490	1
-11	AN3161-P5	•CIRCUIT-BREAKER - PUSH-BUTTON NON-TRIP FREE (MANUAL GUN FIRING) (AS PER EO 05-5E-6A/95)		1
	13A-50034	•DECAL - RELAY BASE GUN-FIRING (AS PER EO 05-5E-6A/95)	001-490	1
-12	AN3161-P10	•CIRCUIT-BREAKER - PUSH-BUTTON NON-TRIP FREE (NOSE STEERING)		1
-13	AN3161-P25	•CIRCUIT-BREAKER - PUSH-BUTTON NON-TRIP FREE (GUN CHARGER COMPRESSOR)		1
-14	AN3161-P5	•CIRCUIT-BREAKER - PUSH-BUTTON NON-TRIP FREE (PANEL VB & GSAP CAM)	001-210	1
	AN3161-P5	•CIRCUIT-BREAKER - PUSH-BUTTON NON-TRIP FREE (GSAP CAM)	211-	1
-15	2B1-10-2	•BUS-BAR - ELECTRICAL (NAA)		1
-16	PDLM-70	•CIRCUIT-BREAKER - MANUAL RESET (STC)	001-100	1
	C6766-3-70	•CIRCUIT-BREAKER - (STC) (MANUAL OVERRIDE)	101-210	1
	AN520-10R12	•SCREW - (MANUAL OVERRIDE CIRCUIT-BREAKER TO BASE ATTACHING)	001-210	2
-17	PDLM-70	•CIRCUIT-BREAKER - MANUAL RESET (STC) (ALTERNATE HYDRAULIC PUMP)	001-100	1
	C6766-3-70	•CIRCUIT-BREAKER - (STC) (ALTR HYD PUMP)	101-	1
	AN520-10R12	•SCREW - (ALTERNATE HYDRAULIC PUMP CIRCUIT-BREAKER TO BASE ATT)		2

FIGURE AND INDEX NUMBER	GROUP / MAJOR ASSEMBLY / PART NUMBER	ELECTRICAL EQUIPMENT / ELECTRICAL RELAY STA 26 STARBOARD SIDE PANEL / 1234567 NOMENCLATURE	CODE	UNITS PER ASSY
176 -18	NAS44-416P2	•BUS-BAR -	001-210	1
-19	51177	•BUTTON - PLUG (UCF)	001-490	1
-20	AN3436-4-1	•TERMINAL BLOCK ASSY - (AS PER EO 05-5E-6A/95)	001-490	1
	AN515-4R6	•SCREW -	001-490	2
	AN960D4	•WASHER -	001-490	2
	AN365-440	•NUT -	001-490	2
	AN961-10	•WASHER -	001-490	1
	AN936A10B	•WASHER -	001-490	1
	AN341-10	•NUT -	001-490	1
-21	SPEC 32471	•RELAY - (CLM) (TYPE D-1)(INVERTER FAILURE)		1
		OR		
	MIL-R-8373	•RELAY - (INVERTER FAILURE)		1
-22	AN509-8R9	•SCREW - (INVERTER FAILURE RELAY TO BASE ATTACHING)		2
-23	AN749-2-6	•JUMPER - (PANEL GROUNDING)	001-100	1
	AN515-6R12	•SCREW -	001-100	2
	AN515-6R12	•SCREW -	101-	1
	AN936A6	•WASHER -	001-100	4
	AN960-6	•WASHER -	001-100	4
	AN960-6	•WASHER -	101-	2
	AN340-6	•NUT -	001-100	4
	AN340-6	•NUT -	101-	1
-24	AN3353-1	•RELAY - 50-AMP SPDT UNSEALED (CANOPY POWER SELECTOR)		1
-25	AN515-8R8	•SCREW - (CANOPY PWR SEL RELAY TO BASE ATT)		2
-26	AN931-5-9	•GROMMET -		2
	AN931A5-9	•GROMMET -		1
-27	172-54127-800	•COVER ASSY - ELEC FUS STA 26 RELAY PANEL		1
	172-54127-103	••CLOTH - ELEC FUS STA 26 RELAY PANEL COVER		1
	172-54127-105	••CLOTH - ELEC FUS STA 26 RELAY PANEL COVER		1
	172-54127-107	••CLOTH - ELEC FUS STA 26 RELAY PANEL COVER		1
	172-54127-109	••CLOTH - ELEC FUS STA 26 RELAY PANEL COVER		1
	AN227-6	••BUTTON -		4
	AN227-7	••SOCKET -		8
	AN227-8	••STUD -		8
	AN227-9	••EYELET -		8
-28	172-54129-950	•PLATE - ELECTRICAL RELAY FUS STA 26 PANEL (REAR COVER) (AS PER EO 05-5E-6A/43)		8
				1

-000-

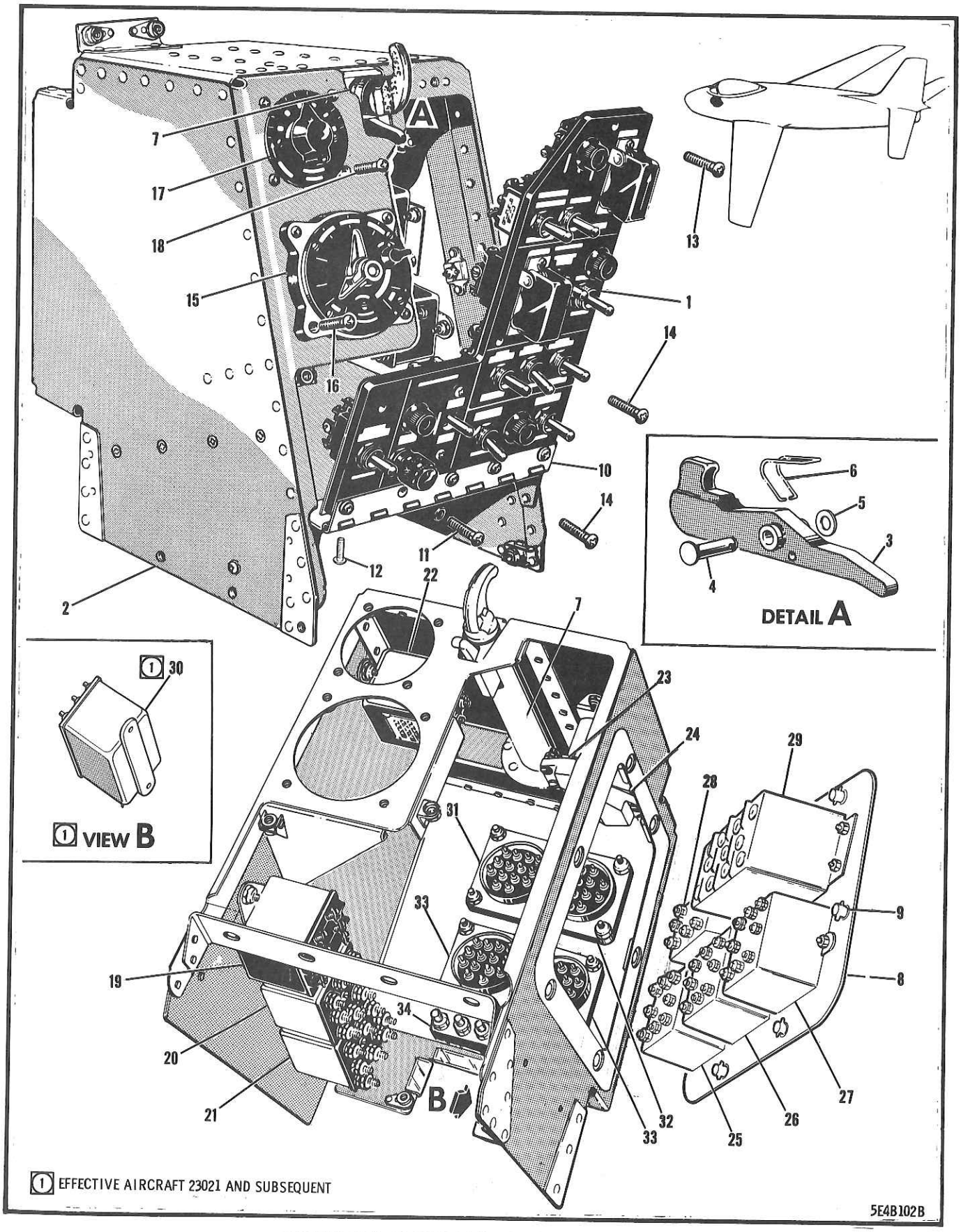

FIGURE 177 ELECTRICAL CENTRE PEDESTAL

FIGURE AND INDEX NUMBER	GROUP ELECTRICAL EQUIPMENT MAJOR ASSEMBLY ELECTRICAL CENTRE PEDESTAL PART NUMBER	1234567 NOMENCLATURE	CODE	UNITS PER ASSY
177 -	172-54104-801	PEDESTAL ASSY - ELECTRICAL CENTRE (SEE FIG. 155)	001-020	1
	172-54104-803	PEDESTAL ASSY - ELECTRICAL CENTRE	021-430	1
	172-54104-804	PEDESTAL ASSY - ELECTRICAL CENTRE	431-490	1
	172-54104-806	PEDESTAL ASSY - ELECTRICAL CENTRE	491-	1
- 1	172-54102-800	.PANEL ASSY - ELECTRICAL CENTRE PEDESTAL (SEE FIG. 178)		REF
- 2	172-54105-51	.PEDESTAL ASSY - ELECTRICAL CENTRE	001-020	1
	172-54105-800	.PEDESTAL ASSY - ELECTRICAL CENTRE	021-	1
- 3	151-52027	..LOCKING-LEVER ASSY - SURFACE CONTROL LOCK-TUBE		1
	151-52027-3	...LOCKING LEVER - LOCK-TUBE		1
	151-52027-5	...BUSHING - LOCKING-LEVER		1
- 4	AN393-25	..PIN -		1
- 5	AN960D10	..WASHER -		1
	AN380-2-2	..PIN -		1
- 6	151-52030	..SPRING - LOCK-TUBE LOCKING-LEVER		1
- 7	151-52022	..GUIDE - LOCK-TUBE		1
- 8	172-54105-15	..DOOR - ELECTRICAL CENTRE PEDESTAL		1
	99833-C.130	..RECEPTACLE - AIRLOC FASTENER STUD (MKM)		6
- 9	98265-1-080	..STUD - FLUSH HEAD AIRLOC FASTENER (MKM)		6
	99836	..CROSS-PIN - AIRLOC FASTENER (MKM)		6
	AN526-832R12	..SCREW -		2
	AN960-8	..WASHER -		4
	AN935-8L	..WASHER -		4
	AN340-8	..NUT -		4
-10	172-54106	.HINGE ASSY - ELECTRICAL CENTRE PEDESTAL		1
	172-54106-3	..HALF-HINGE - (MAKE FROM AN257YC4)		1
	172-54106-5	..HALF-HINGE - (MAKE FROM AN257XC4)		1
	AN253-3-675	..HINGE-PIN -		1
-11	AN515-8R8	.SCREW -		4
	AN515-8R10	.SCREW -		1
	1J1-1A2-6	.JUMPER - WIRE (NAA)		1
	AN960D8L	.WASHER -		5
	AN364-832	.NUT -		5
-12	AN507-832R6	.SCREW -		4
	AN960D8L	.WASHER -		4
	AN364-832	.NUT -		4
	191-54026	.SUPPORT ASSY - ELECTRICAL CTR PED CONDUIT	101-	1
	AN504-6R6	.SCREW -	101-300	2
	AN530-6R6	.SCREW -	301-	2
	AN936A6	.WASHER -	101-	2
-13	AN515-8R12	.SCREW -		1
-14	AN515-8R14	.SCREW -		2
-15	672636	.SELECTOR - SIGHT UNIT TYPE A4 (G.F.E.) OR		1
	686862	.SELECTOR - SIGHT UNIT TYPE A4 (G.F.E.)		
-16	AN515-6R10	.SCREW -		4
-17	187-74023	.SCALE ASSY - GUN BOMB ROCKET SIGHT TYPE A4 BOMB TARGET WIND		1
-18	AN515-6R10	.SCREW -		4
	AN365-632	.NUT -		4
-19	AN3311-1	.RELAY - 10-AMP 2PDT HERMETICALLY SEALED (ALTERNATE HYDRAULIC POWER CONTROL)		1
	AN507-632R7	.SCREW -		1
	AN365-632	.NUT -		1
-20	237-EAU	.RELAY ASSY - 10-AMP RESISTIVE 29-VDC (LRC) (LDG/GR WARNING HORN)		1
	AN507-632R7	.SCREW -		1
	AN960D8	.WASHER -		1

FIGURE AND INDEX NUMBER	GROUP ELECTRICAL EQUIPMENT MAJOR ASSEMBLY ELECTRICAL CENTRE PEDESTAL PART NUMBER	1234567 NOMENCLATURE	CODE	UNITS PER ASSY
177 -	2B2C5	•BUS-BAR - (NAA)		1
	AN365-632	•NUT -		1
-21	233-51A	•RELAY - (LRC) (24-VDC SPDT) (N-9 CAMERA CONTROL)		1
	AN507-632R8	•SCREW -		2
	AN960D8	•WASHER -		3
	AN365-632	•NUT -		2
-22	237-EAU	•RELAY ASSY - 10-AMP RESISTIVE 29-VDC (LRC) (FRAGMENTATION BOMB SELECTOR)		1
	AN507-632R7	•SCREW -		2
	AN960D8	•WASHER -		2
	AN365-632	•NUT -		2
-23	AN3350-2	•RELAY - 50-AMP SPST UNSEALED (LANDING LT)		1
	AN515-6R7	•SCREW -		2
	AN960D6L	•WASHER -		2
	AN365-632	•NUT -		2
-24	AN3350-2	•RELAY - 50-AMP SPST UNSEALED (BOMB RELEASE POWER)		1
	AN515-6R7	•SCREW -	001-746	2
	AN507-632R7	•SCREW -	747-	2
	AN960D6L	•WASHER -		2
	AN365-632	•NUT -		2
	AN515-8R8	•SCREW -	101-	1
	2W18-8L	•WASHER - FLAT (NAA)	101-	1
	AN365-832	•NUT -	101-	1
-25	237-EAU	•RELAY ASSY - 10-AMP RESISTIVE 29-VDC (LRC) (BUS TIE-IN CONTROL GENERATOR)		1
	AN507-632R7	•SCREW -		1
	AN960D8	•WASHER -		1
	AN365-632	•NUT -		1
-26	237-EAU	•RELAY ASSY - 10-AMP RESISTIVE 29-VDC (LRC) (FUEL TANK JETTISON)		1
	AN507-632R8	•SCREW -		2
	AN960D8	•WASHER -		2
	AN365-632	•NUT -		2
-27	237-EAU	•RELAY ASSY - 10-AMP RESISTIVE 29-VDC (LRC) (BOMB RELEASE CONTROL)		1
	1J1-1A3-36	•JUMPER - WIRE (NAA)	301-	1
	AN507-632R7	•SCREW -		1
	AN960D8	•WASHER -		1
	AN365-632	•NUT -		1
-28	237-EAU	•RELAY ASSY - 10-AMP RESISTIVE 29-VDC (LRC) (BUS TIE-IN CONTROL EXTERNAL POWER)		1
	AN507-632R7	•SCREW -		2
	AN960D8	•WASHER -		2
	AN365-632	•NUT -		2
-29	AN3312-1	•RELAY - 10-AMP 3PDT SEALED (ALTERNATE HYDRAULIC TIE-IN CONTROL)		1
	AN507-632R7	•SCREW -		4
	AN960D8	•WASHER -		4
	AN365-632	•NUT -		4
	2B1B5-2	•BUS-BAR - (NAA)	101-	1
-30	237-EAU	•RELAY ASSY - 10-AMP RESISTIVE 29-VDC (LRC) (SALVO RELAY)		1
	AN507-632R7	•SCREW -	021-	2
	AN960D8	•WASHER -	021-	2
	AN365-632	•NUT -	021-	2
-31	AN3102A28-11P	•RECEPTACLE -		1
	AN515-6R7	•SCREW -		4
	AN960D6L	•WASHER -		4

FIGURE AND INDEX NUMBER	GROUP ELECTRICAL EQUIPMENT MAJOR ASSEMBLY ELECTRICAL CENTRE PEDESTAL PART NUMBER	1234567 NOMENCLATURE	CODE	UNITS PER ASSY
177 -	AN365-632	•NUT -		4
	2L7-2	•LUG - SAFETY (NAA)		1
-32	AN3102A28-11P	•RECEPTACLE -		1
	AN515-6R7	•SCREW -		4
	AN960D6L	•WASHER -		4
	AN365-632	•NUT -		4
	2L7-2	•LUG - SAFETY (NAA)		1
-33	AN3102A32-7P	•RECEPTACLE -		2
	AN515-8R8	•SCREW -		8
	AN960D8L	•WASHER -		8
	AN365-832	•NUT -		8
	2L7-2	•LUG - SAFETY (NAA)		2
	1J1-2-4-6	•JUMPER - WIRE (NAA)	001-100	1
	AN960-8	•WASHER -	101-300	2
	1J1-2-3-12	•JUMPER - WIRE (NAA)	301-	1
-34	237-EAU	•RELAY ASSY - 10-AMP RESISTIVE 29-VDC (LRC) (TOW TARGET JETTISON)	001-430	1
	AN507-632R7	•SCREW -	001-430	2
	AN960-8	•WASHER -	001-430	2
	AN365-632	•NUT -	001-430	2

-000-

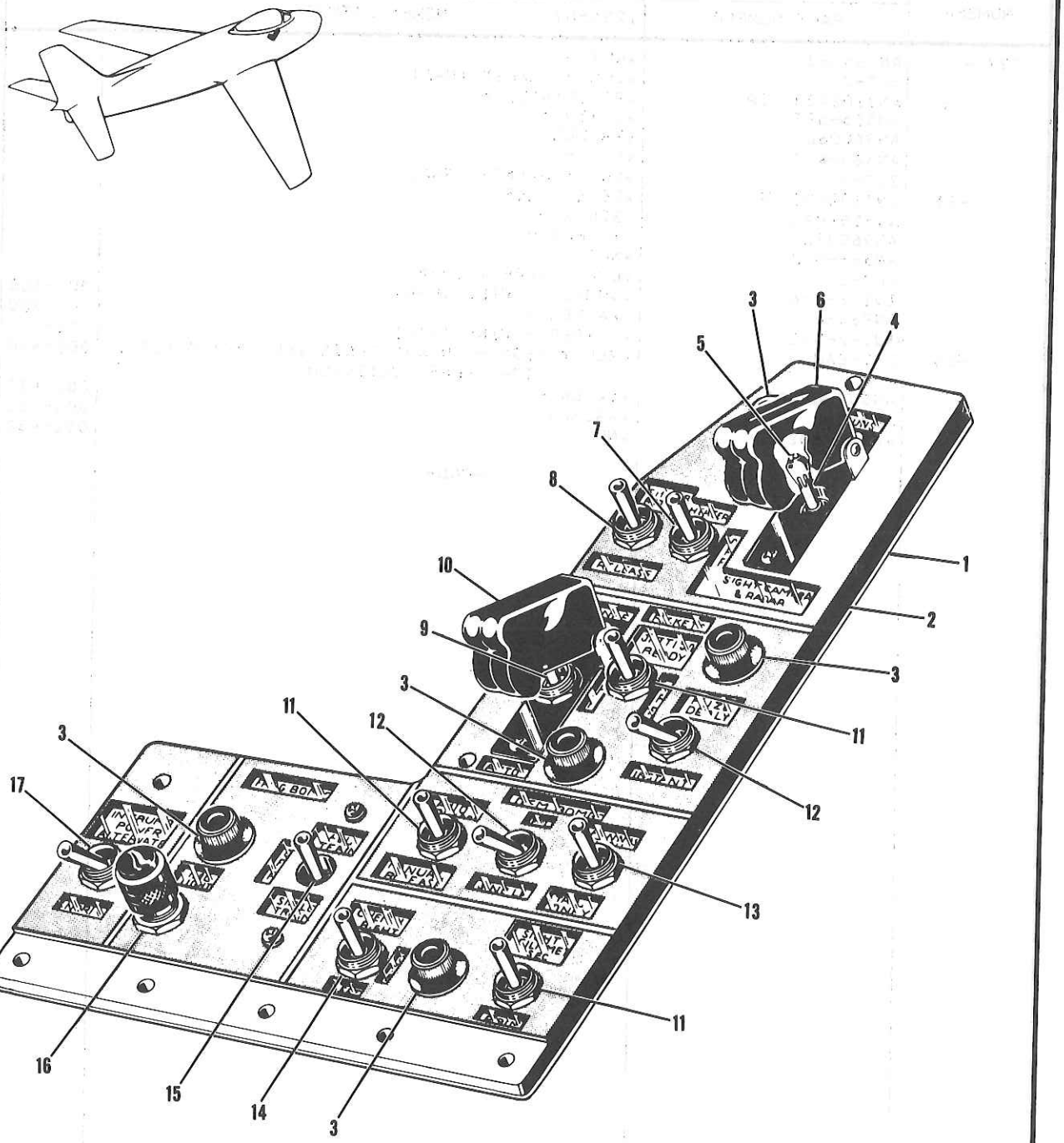

FIGURE 178 ELECTRICAL CENTRE PEDESTAL PANEL

FIGURE AND INDEX NUMBER	GROUP ELECTRICAL EQUIPMENT MAJOR ASSEMBLY ELECTRICAL CENTRE PEDESTAL PANEL PART NUMBER	1234567 NOMENCLATURE	CODE	UNITS PER ASSY
178 -	172-54102-800	PANEL ASSY - ELECTRICAL CENTRE PEDESTAL (SEE FIG. 177)	001-430	1
	172-54102	PANEL ASSY - ELECTRICAL CENTRE PEDESTAL	431-490	1
	172-54102-802	PANEL ASSY - ELECTRICAL CENTRE PEDESTAL	491-	1
- 1	172-54101	•SHIELD - ELECTRICAL CENTRE PEDESTAL PANEL		1
- 2	172-54103-800	•PLATE - ELEC CENTRE PEDESTAL PANEL	001-430	1
	172-54103	•PLATE - ELEC CENTRE PEDESTAL PANEL	431-	1
- 3	MS25010-2	•LIGHT - PLASTIC PLATE LIGHTING PANEL		5
	AN3140-327	•LAMP -		5
- 4	AN3226-1	•SWITCH - THREE-HOLE MOUNTING THREE-POLE TOGGLE (GUNSIGHT CAMERA & RADAR)		1
- 5	AN3221-1	•TIP -		1
	1J1-1A1A8	•JUMPER - WIRE (NAA)		1
	AN515-6R9	•SCREW -		2
	AN365-632	•NUT -		2
- 6	8916K689	•RUBBERBOOT ASSY - SINGLE-POLE 4-POSN FLUSH MOUNTING SWITCH (CHI)		1
- 7	AN3027-8	•SWITCH - ONE-HOLE MOUNTING DOUBLE-POLE TOGGLE (GUN CHARGER HEATER)		1
	2B2C8	•BUS-BAR - (NAA)		1
- 8	AN3027-3	•SWITCH - ONE-HOLE MOUNTING DOUBLE-POLE TOGGLE (GUN CHARGER RETR & RELEASE) (AS PER EO 05-5E-6A/95)		1
	172-54157	•INSULATOR - ELEC SINGLE-HOLE MTG SWITCH (AS PER EO 05-5E-6A/95)		1
- 9	AN3027-1	•SWITCH - ONE-HOLE MOUNTING DOUBLE-POLE TOGGLE (ROCKET SELECTOR)		1
	AN515-6R9	•SCREW -		2
	AN365-632	•NUT -		2
	2B2C7	•BUS-BAR - (NAA)		1
	1J1-1A1A3	•JUMPER - WIRE (NAA)		1
-10	157-54089-13	•GUARD - ELEC THREE-HOLE MOUNTING SWITCH (MAKE FROM AN3333-1)		1
-11	AN3021-3	•SWITCH - SINGLE-POLE ONE-HOLE MOUNTING TOGGLE (BOMB RELEASE ROCKET JETTISON & SIGHT FILAMENT)		3
-12	AN3021-1	•SWITCH - SINGLE-POLE ONE-HOLE MOUNTING TOGGLE (BOMB & ROCKET FUSE)		2
-13	AN3027-1	•SWITCH - ONE-HOLE MOUNTING DOUBLE-POLE TOGGLE (BOMB ARMING)		1
	2B2C7	•BUS-BAR - (NAA)		1
	172-54157	•INSULATOR - ELEC SINGLE-HOLE MTG SWITCH		1
	1J1-1A1A3	•JUMPER - WIRE (NAA)		1
-14	AN3021-1	•SWITCH - SINGLE-POLE ONE-HOLE MOUNTING TOGGLE (CHEMICAL TANK)		1
-15	AN3226-1	•SWITCH - THREE-HOLE MOUNTING THREE-POLE TOGGLE (FRAGMENTATION BOMB SELECTOR)		1
	2B2C8	•BUS-BAR - (NAA)		1
	AN515-6R9	•SCREW -		2
	AN960D6L	•WASHER -		2
	AN365-632	•NUT -		2
	1J1-1A1A8	•JUMPER - WIRE (NAA)		2
-16	AN3157-4	•LIGHT ASSY - PRESS-TO-TEST IND (FRAG BOMB)		1
	AN3121-313	•LAMP -		1
-17	AN3027-3	•SWITCH - ONE-HOLE MOUNTING DOUBLE POLE TOGGLE (INSTRUMENT POWER)		1

-000-

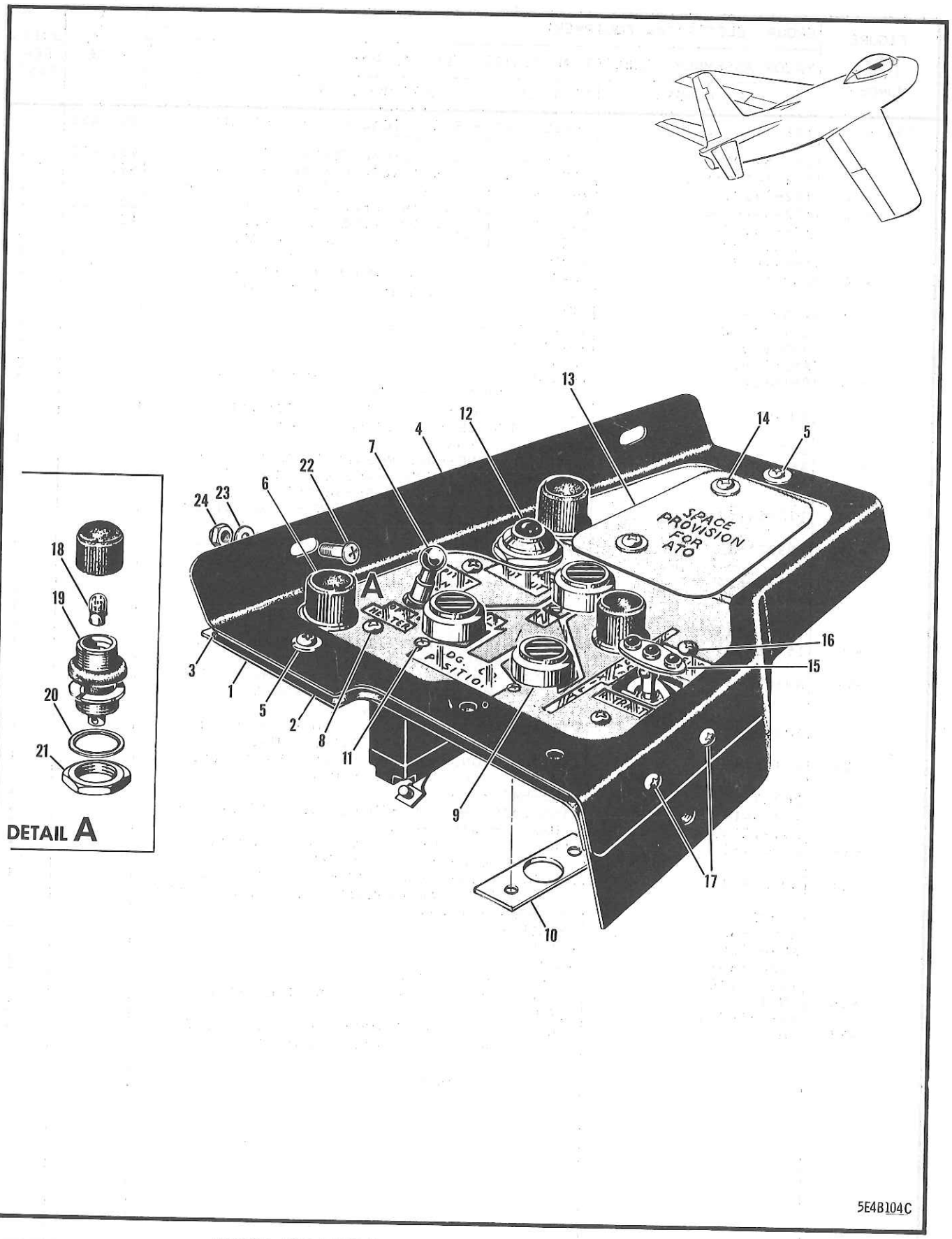

FIGURE 179 FORWARD CONSOLE STA 72-79 PORT SIDE PANEL

FIGURE AND INDEX NUMBER	GROUP ELECTRICAL EQUIPMENT MAJOR ASSEMBLY FORWARD CONSOLE STA 72-79 PORT SIDE PANEL PART NUMBER	1234567 NOMENCLATURE	CODE	UNITS PER ASSY
179 -	191-54031	ELECTRICAL EQUIP. INSTL - FORWARD FUSELAGE (SEE FIG. 152)		REF
	172-54028	.PANEL ASSY - ELEC FORWARD PORT SIDE CONSOLE (COMPLETE) (SEE FIG. 156)		1
- 1	172-54033	..BASE - ELECTRICAL LH FWD CONSOLE PANEL		1
- 2	172-54030	..RETRACTOR - ELECTRICAL LH FWD CONSOLE PNL		1
- 3	172-54032	..SHIELD - ELECTRICAL LH FWD CONSOLE PANEL		1
	161-54029-10	..PANEL ASSY - ELECTRICAL LH FWD CONSOLE		1
	161-54029-13	...PANEL - ELECTRICAL LH FORWARD CONSOLE		1
- 4	161-54029-5	...DOUBLER - ELECTRICAL LH FWD CONSOLE PNL		1
- 5	AN515-8R8	..SCREW -		2
	AN960D8L	..WASHER -		2
	AN365-832	..NUT -		2
- 6	AN3502-2A	..LIGHT ASSY - PLASTIC LIGHTING PLATE CONTROL PANEL		3
- 7	AN3160-10	..CIRCUIT-BREAKER - NON-TRIP FREE SW TYPE		1
- 8	AN515-6R8	..SCREW - (CIRCUIT-BREAKER ATTACHING)		2
- 9	AN5839-1	..INDICATOR - LANDING GEAR POSITION 28-VDC (G.F.E.) (GEC)		3
		OR		
	21250A	..INDICATOR - LANDING GEAR POSN (G.F.E.)	001-370	
		OR		
	AN5839-2	..INDICATOR - LANDING GEAR POSITION 28-VDC		
-10	191-54050	..SPACER - ELECTRICAL TYPE C-1 INDICATOR (AS PER EO 05-5E-6A/82)		3
-11	AN515-6R10	..SCREW - (INDICATOR ATTACHING)		6
	AN960D6L	..WASHER -		6
-12	A401B4	..SWITCH - PUSH-BUTTON (HET) (WARNING HORN CUT-OUT)		1
-13	172-54044	..NAME-PLATE - ELEC SPACE PROVISION FOR ATO		1
-14	AN515-6R8	..SCREW - (PLATE ATTACHING)		2
	AN365-632	..NUT -		2
-15	AN3022-15B	..SWITCH - SINGLE-POLE THREE-HOLE MOUNTING TOGGLE (LANDING GEAR LAMP)		1
-16	AN515-6R10	..SCREW - (LANDING GEAR LAMP SWITCH ATT)		2
-17	AN515-8R6	..SCREW -		2
	AN960D8L	..WASHER -		2
	AN365-832	..NUT -		2
-18	AN3140-327	.LAMP -		3
-19	AN3106B10SL3S	.PLUG -		3
-20	2W1R8-18-125	.WASHER - PLAIN (NAA)	001-200	3
	2W1SR8-18-125	.WASHER - PLAIN (NAA)	201-	3
	2W1F24-18-63	.WASHER - PLAIN (NAA)		3
	AN781-1	.NIPPLE -	301-	2
-21	AN3054-4	.NUT -		3
-22	AN520-10R8	.SCREW - (PANEL ATTACHING)		2
-23	AN960D10L	.WASHER -		2
-24	AN365-1032	.NUT -		2

-000-

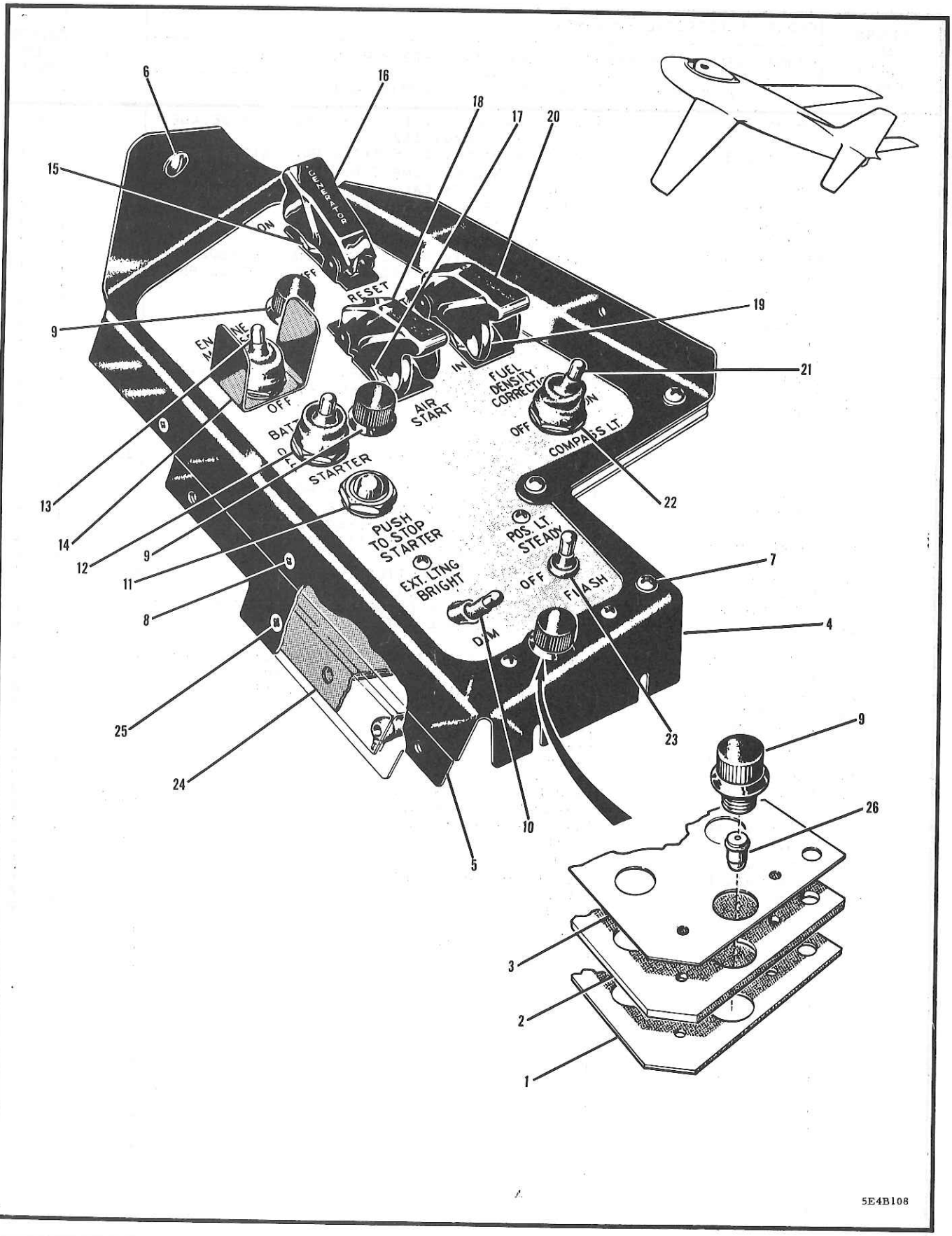

FIGURE 180 FORWARD CONSOLE STARBOARD SIDE PANEL

FIGURE AND INDEX NUMBER	GROUP ELECTRICAL EQUIPMENT MAJOR ASSEMBLY FORWARD CONSOLE STARBOARD SIDE PANEL PART NUMBER	1234567 NOMENCLATURE	CODE	UNITS PER ASSY
180 -	191-54031	ELECTRICAL EQUIP. INSTL - FORWARD FUSELAGE (SEE FIG. 152)		REF
	172-54095-10	•PANEL ASSY - ELECTRICAL CONSOLE FORWARD STBD SIDE (COMPLETE) (SEE FIG. 158)	001-210	1
	172-54095-800	•PANEL ASSY - ELECTRICAL CONSOLE FORWARD STBD SIDE (COMPLETE)	211-	1
- 1	172-54099	••BASE ASSY - ELECTRICAL CONSOLE FWD PANEL STARBOARD SIDE	001-210	1
	172-54099-800	••BASE ASSY - ELECTRICAL CONSOLE FWD PANEL STARBOARD SIDE	211-	1
- 2	172-54098	••REFRACTOR - ELECTRICAL CONSOLE FWD PANEL STARBOARD SIDE	001-210	1
	172-54098-100	••REFRACTOR - ELECTRICAL CONSOLE FWD PANEL STARBOARD SIDE	211-	1
- 3	172-54097	••SHIELD - ELECTRICAL CONSOLE FORWARD PANEL STARBOARD SIDE	001-210	1
	172-54097-100	••SHIELD - ELECTRICAL CONSOLE FORWARD PANEL STARBOARD SIDE	211-	1
	172-54096	••PANEL ASSY - ELECTRICAL CONSOLE FORWARD STARBOARD SIDE		1
- 4	172-54096-3	•••PANEL - ELECTRICAL CONSOLE FWD STBD SIDE		1
- 5	172-54096-5	•••DOUBLER - ELECTRICAL CONSOLE FWD PANEL STARBOARD SIDE		1
- 6	A4-25	•••FASTENER - OVAL HEAD (DFC)		1
- 7	AN515-6R10	••SCREW -		2
	AN515-8R10	••SCREW -		4
	AN960D6L	••WASHER -		2
	AN960D8L	••WASHER -		4
	AN365-632	••NUT -		6
- 8	AN507-832R7	••SCREW -		2
- 9	AN3502-2A	••LIGHT ASSY - PLASTIC LT PLATE CTL PANEL		3
-10	AN3227-3	••SWITCH - THREE-HOLE MOUNTING FOUR-POLE TOGGLE (EXTERNAL LIGHTING)	001-210	1
	AN3022-1	••SWITCH - SINGLE-POLE 3-HOLE MTG TOGGLE	211-	1
	AN3224-2	••BOOT -		1
	AN515-6R8	••SCREW - (SWITCH ATTACHING)		1
	AN515-6R10	••SCREW - (SWITCH ATTACHING)		1
-11	D800	••SWITCH - (HET) (PUSH-TO-STOP STARTER)		1
-12	AN3027-8	••SWITCH - ONE-HOLE MOUNTING DOUBLE-POLE TOGGLE (BATTERY STARTER)		1
	AN3223-1	••BOOT -		1
-13	AN3027-3	••SWITCH - ONE-HOLE MOUNTING DOUBLE-POLE TOGGLE (ENGINE MASTER)		1
	AN3223-1	••BOOT -		1
	2B2-C-7	••BUS-BAR - (NAA) (ENGINE MASTER)		1
-14	161-54058	••GUARD - ELECTRICAL CONSOLE PANEL FWD STBD SIDE ENGINE MASTER FUEL SWITCH		1
-15	AN3027-8	••SWITCH - ONE-HOLE MTG DOUBLE-POLE TOGGLE (EMERGENCY)		1
-16	140-54128-3	••GUARD - ONE-HOLE MOUNTING SWITCH		1
-17	AN3021-2	••SWITCH - SINGLE-POLE ONE-HOLE MOUNTING TOGGLE (EMERGENCY IGNITION)		1
-18	140-54128-11	••GUARD - ONE-HOLE MOUNTING SWITCH		1
-19	AN3021-2	••SWITCH - SINGLE-POLE ONE-HOLE MTG TOGGLE (DENSITOMETER)		1
-20	140-54128-21	••GUARD - ONE-HOLE MOUNTING SWITCH		1
-21	AN3021-2	••SWITCH - SINGLE-POLE ONE-HOLE MTG TOGGLE (COMPASS LIGHT)		1
-22	AN3223-1	••BOOT -		1
-23	AN3227-1	••SWITCH - THREE-HOLE MTG FOUR-POLE TOGGLE (POSITION LIGHT)	001-210	1

FIGURE AND INDEX NUMBER	GROUP ELECTRICAL EQUIPMENT MAJOR ASSEMBLY FORWARD CONSOLE STARBOARD SIDE PANEL PART NUMBER	1234567 NOMENCLATURE	CODE	UNITS PER ASSY
180 -	AN3224-2	••BOOT -	001-210	1
	AN515-6R8	••SCREW -	001-210	1
	AN515-6R10	••SCREW -	001-210	1
	2B2-C-4	••BUS-BAR - (NAA) (POSITION LIGHT)	001-210	1
	2B2-C-6	••BUS-BAR - (NAA) (POSITION LIGHT)	001-210	1
-24	161-54132	••GUARD - ELECTRICAL RESISTOR		1
	A25K	••RESISTOR - (CMC) (25-W FIXED WIRE-WOUND)		1
	P-25-K	••SPARE PART FOR A25K RESISTOR (CMC)		
	B20K	••RESISTOR - (CMC) (20-W FIXED WIRE-WOUND)	001-210	1
	PR-20-K	••SPARE PART FOR B20K RESISTOR (CMC)	001-210	
-25	AN507-832R40	••SCREW -	001-210	1
	AN507-832R48	••SCREW -		1
	AN960D616	••WASHER -	001-210	2
	AN960D616	••WASHER -	211-	1
	2W1F12-18-62	••WASHER - PLAIN (NAA)	001-210	2
	2W1F12-18-62	••WASHER - PLAIN (NAA)	211-	1
	AN365-832	••NUT -	001-210	2
	AN365-832	••NUT -	211-	1
-26	AN3140-327	•LAMP -		3
	AN3121-313	•LAMP -		1
	AN515-8R8	•SCREW -	001-200	3
	AN507-832R8	•SCREW -	201-	2
	A3135-017	•WASHER - FLAT-HEAD SCREW (TIN)	201-	2
	AN515-8R8	•SCREW -	201-	1
	AN960D8L	•WASHER -		1
	AN3-4A	•BOLT -		2
	AN960D10L	•WASHER -		2

-000-

FIGURE 181 DELETED

FIGURE AND INDEX NUMBER	PART NUMBER	1234567 NOMENCLATURE	CODE	UNITS PER ASSY
		FIGURE 181 DELETED		

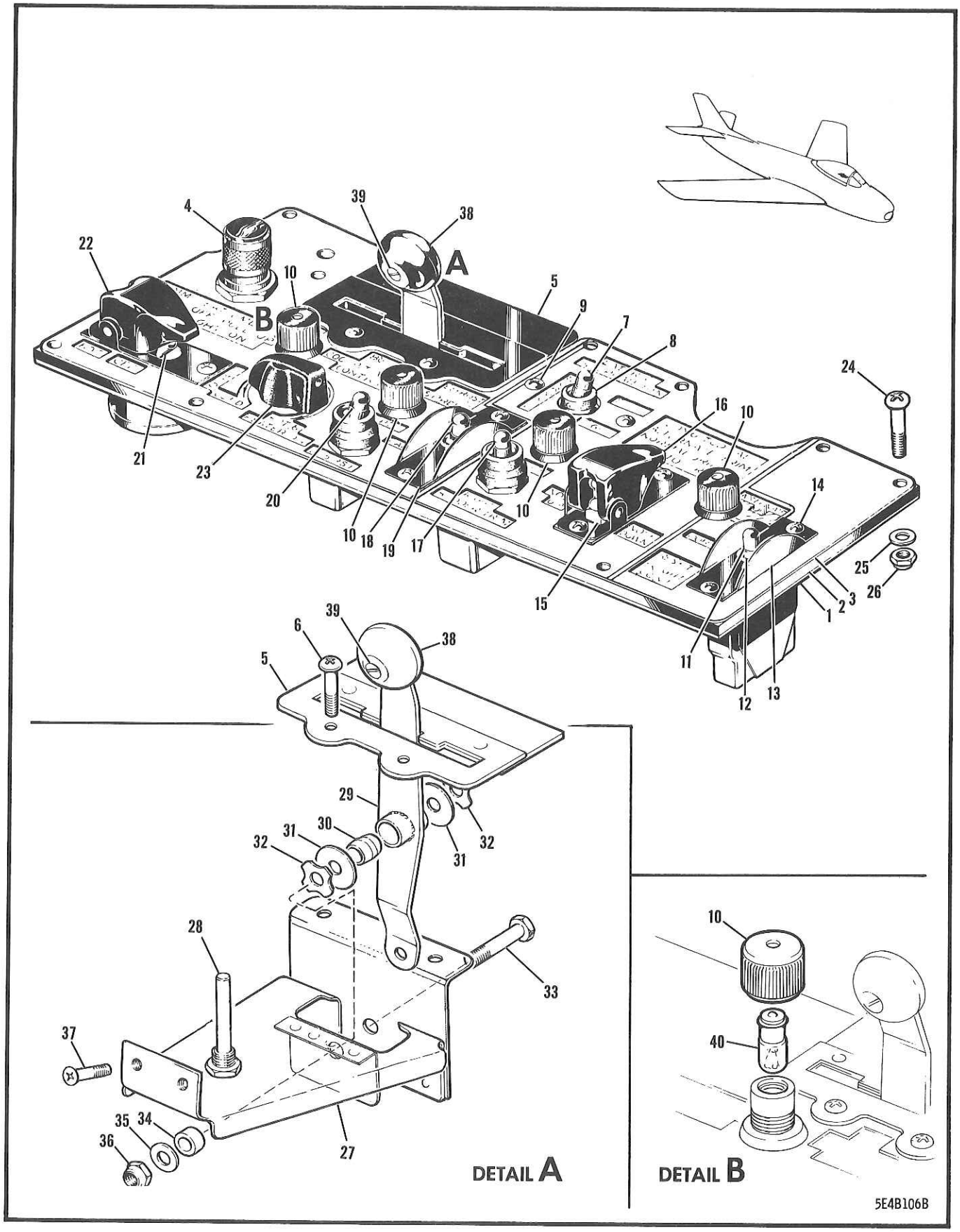

FIGURE 182 FORWARD CONSOLE PORT SIDE PANEL & MOUNT

FIGURE AND INDEX NUMBER	GROUP ELECTRICAL EQUIPMENT MAJOR ASSEMBLY FORWARD CONSOLE PORT SIDE PANEL & MOUNT PART NUMBER	1234567 NOMENCLATURE	CODE	UNITS PER ASSY
182 -	191-54031	ELECTRICAL EQUIP. INSTL - FORWARD FUSELAGE (SEE FIG. 152)		REF
	172-54065	•PANEL ASSY - ELECTRICAL CONSOLE FORWARD (PORT SIDE) (SEE FIG. 157)	001-210	1
	172-54065-30	•PANEL ASSY - ELECTRICAL CONSOLE FORWARD (PORT SIDE)	C2	1
	172-54065-800	•PANEL ASSY - ELECTRICAL CONSOLE FORWARD (PORT SIDE)	491-666	1
- 1	172-54062	••BASE - ELECTRICAL CONSOLE FWD (PORT SIDE)	001-210	1
	172-54062-30	••BASE - ELECTRICAL CONSOLE FWD (PORT SIDE)	211-	1
- 2	172-54063	••PLATE - ELECTRICAL CONSOLE FORWARD PLASTIC (PORT SIDE)	001-360	1
	172-54063-30	••PLATE - ELECTRICAL CONSOLE FORWARD PLASTIC (PORT SIDE)	361-	1
- 3	172-54064	••SHIELD - ELECTRICAL CONSOLE FORWARD PANEL (PORT SIDE)	001-210	1
	172-54064-30	••SHIELD - ELECTRICAL CONSOLE FORWARD PANEL (PORT SIDE)	211-	1
- 4	AN3157-2	••LIGHT ASSY - PRESS-TO-TEST INDICATOR (AMO HEAT EMERGENCY SHUT-OFF)	001-210	1
	AN3121-313	••LAMP -	001-210	1
- 5	172-54061	••GUIDE ASSY - ELECTRICAL COCKPIT TEMPERATURE CONTROL HANDLE		1
	172-54060	•••GUIDE - ELECTRICAL CKPT TEMP CTL HANDLE		1
	172-54059	•••DOUBLER - ELECTRICAL COCKPIT TEMPERATURE CONTROL HANDLE GUIDE		1
- 6	AN515-8R10	••SCREW - (GUIDE ATTACHING)		2
	AN960D8L	••WASHER -		2
	AN365-832	••NUT -		2
- 7	45A-7400-1	••SWITCH ASSY - (CHI) (SP 4-POSN FLUSH MTG) OR		1
	8949K11	••SWITCH ASSY - (CHI) (SP 4-POSN FLUSH MTG)		
- 8	AN3224-2	••BOOT -		1
- 9	AN515-6R10	••SCREW - (SWITCH ATTACHING)		2
-10	AN3502-2A	••LIGHT ASSY - PLASTIC LT PLATE CONTROL PNL OR		4
	MS25010-2	••LIGHT - PLASTIC PLATE LIGHTING PANEL		
-11	1AT5	••SWITCH ASSY - 3-POSITION M/CONT (MSC) (RESET POWER CONTROL) OR		1
	11AT50	••SWITCH ASSY - (MSC) (3-POSITION M/CONT) (RESET POWER CONTROL)		
-12	AN3224-2	••BOOT -		1
-13	165-54251	••GUARD - ELECTRICAL COCKPIT AIR SWITCH		1
	AN936B4	••WASHER -	201-	12
	AN961-4	••WASHER -	201-	6
-14	AN515-6R10	••SCREW - (SWITCH & GUARD ATTACHING)		2
-15	45A-7400-1	••SWITCH ASSY - (CHI) (SP 4-POSN FLUSH MTG) OR		1
	8749K11	••SWITCH - SINGLE-POLE 4-POSN FLUSH MTG (CHI)		
-16	8916K703	••RUBBERBOOT ASSY - SINGLE-POLE 4-POSITION FLUSH MOUNTING SWITCH (CHI)	A14	1
	13A-51063	••GUARD ASSY - CONSOLE FORWARD SIDE PANEL (PORT SIDE)	491-666	1
	13A-51063-3	•••PAD - CONSOLE FORWARD PANEL GUARD (PORT SIDE) (AS PER EO 05-5E-6A/73)	001-666	1
	8916K703	•••RUBBERBOOT ASSY - SINGLE-POLE 4-POSITION FLUSH MOUNTING SWITCH (CHI)	491-666	1
	AN515-6R10	••SCREW - (SWITCH ATTACHING)		2

FIGURE AND INDEX NUMBER	GROUP ELECTRICAL EQUIPMENT MAJOR ASSEMBLY FORWARD CONSOLE PORT SIDE PANEL & MOUNT PART NUMBER	1234567 NOMENCLATURE	CODE	UNITS PER ASSY
182 -17	AN3027-7	••SWITCH - ONE-HOLE MTG DOUBLE-POLE TOGGLE (RIGHT RUDDER TRIM)		1
	AN3223-1	••BOOT -		1
-18	AN3227-3	••SWITCH - 3-HOLE MOUNTING FOUR-POLE TOGGLE (RAM PRESSURE SELECTOR)		1
-19	165-54251	••GUARD - ELECTRICAL COCKPIT AIR SWITCH		1
	AN3224-2	••BOOT -		1
	2B2B6	••BUS-BAR - (NAA)		1
	1J1-1-1-3	••JUMPER - WIRE (NAA)		1
	AN515-6R10	••SCREW - (SWITCH & GUARD ATTACHING)		2
-20	AN3021-2	••SWITCH - ONE-HOLE MOUNTING SINGLE-POLE TOGGLE (COCKPIT PRESSURE REGULATOR)		1
	AN3223-1	••BOOT -		1
-21	45A-7400-1	••SWITCH ASSY - (CHI) (SP 4-POSN FLUSH MTG)		1
		OR		
	8747K3	••SWITCH - SP 4-POSN FLUSH MOUNTING (CHI)		
		OR		
	MS25128-2	••SWITCH - SINGLE-POLE 4-POSITION TOGGLE		
-22	8916K703	••RUBBERBOOT ASSY - SP 4-POSITION FLUSH MOUNTING SWITCH (CHI)	A14	1
	13A-51063	••GUARD ASSY - CONSOLE FORWARD SIDE PANEL (PORT SIDE)	491-666	1
	13A-51063-3	•••PAD - CONSOLE FWD PANEL GUARD(PORT SIDE) (MAY BE USED ON AIRCRAFT SERIAL NO. 23001-23490 AS PER EO 05-5E-6A/73)		1
	8916K703	•••RUBBERBOOT ASSY - SP 4-POSITION FLUSH MOUNTING SWITCH (CHI)	491-666	1
	AN515-6R10	••SCREW - (SWITCH ATTACHING)		2
-23	AN3220-3	•KNOB -		1
-24	AN515-8R10	•SCREW - (PANEL ATTACHING)		11
-25	AN960D8L	•WASHER -		11
-26	AN365-832	•NUT -		9
	172-54058-7	•MOUNTING ASSY - ELECTRICAL COCKPIT AIR SEL & TEMPERATURE CONTROL (SEE FIG. 157)		1
-27	172-54057	••BOX ASSY - ELECTRICAL CKPT AIR TEMP CTL		1
-28	45032	••SELECTOR ASSY - (ARM) (CABIN PRESSURE)		1
-29	172-54056	••ARM ASSY - ELECTRICAL COCKPIT AIR SELECTOR		1
-30	151-53686-1	••BUSHING - TILT ACTION ALIGNING		1
-31	2W1AL17-27-40	••WASHER - PLAIN (NAA)	001-200	2
	2W1-17-27-40	••WASHER - PLAIN (NAA)	201-	2
-32	146-43034	••SPRING - FRICTION		2
-33	AN4-14A	••BOLT - (ARM TO BOX ATTACHING)		1
-34	NAS43DD-4-8	••SPACER -		1
-35	AN960D416	••WASHER -	001-200	1
	2W18-416L	••WASHER - PLAIN (NAA)	201-	1
-36	AN365-428	••NUT -		1
-37	AN507-832R5	•SCREW - (MOUNTING ATTACHING)		2
-38	NAS123B-125	•KNOB -	001-100	1
	1K6	•KNOB - CONTROL (NAA)	101-	1
-39	AN507-1032R8	•SCREW - (KNOB TO ARM ATTACHING)		1
	AN960D10L	•WASHER -		1
-40	AN3140-327	•LAMP -		4

-000-

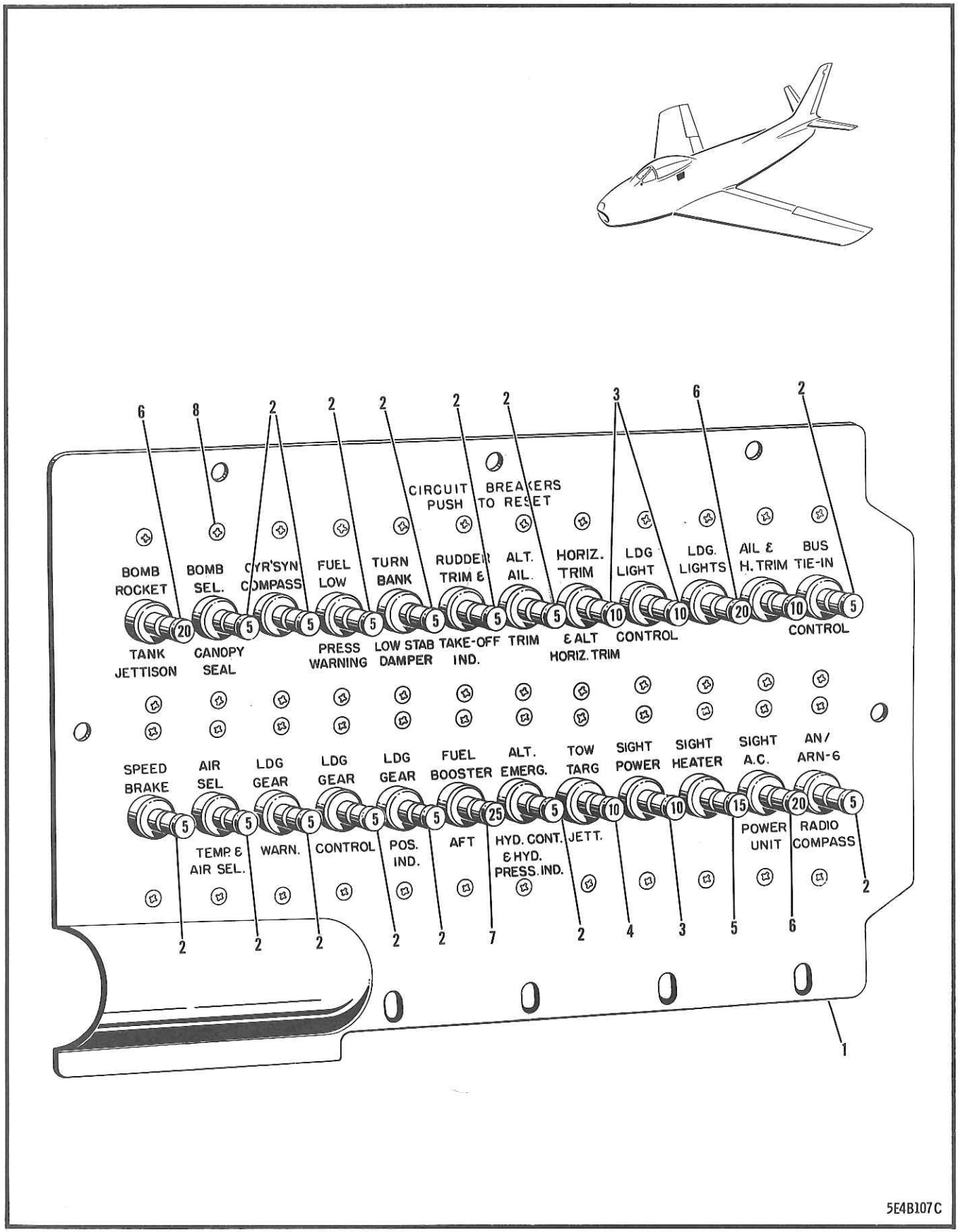

FIGURE 183 REAR CIRCUIT-BREAKER PORT SIDE PANEL

FIGURE AND INDEX NUMBER	GROUP ELECTRICAL EQUIPMENT MAJOR ASSEMBLY REAR CIRCUIT-BREAKER PORT SIDE PANEL PART NUMBER	1234567 NOMENCLATURE	CODE	UNITS PER ASSY
183 -	170-54068-801	PANEL ASSY - ELEC CKT/BKR REAR (PORT) (SEE FIG. 157)	001-100	1
	170-54068-803	PANEL ASSY - ELEC CKT/BKR REAR (PORT)	101-300	1
	170-54068-804	PANEL ASSY - ELEC CKT/BKR REAR (PORT)	301-430	1
	170-54068-805	PANEL ASSY - ELEC CKT/BKR REAR (PORT)	431-	1
- 1	170-54070-802	•PANEL ASSY - ELEC CKT/BKR REAR (PORT)	001-100	1
	170-54070-804	•PANEL ASSY - ELEC CKT/BKR REAR (PORT)	101-300	1
	170-54070-805	•PANEL ASSY - ELEC CKT/BKR REAR (PORT)	301-430	1
	170-54070-806	•PANEL ASSY - ELEC CKT/BKR REAR (PORT)	431-	1
	2B1-7-3	•BUS-BAR - (NAA)		1
	2B1-7-4	•BUS-BAR - (NAA)		4
	2B1-7-5	•BUS-BAR - (NAA)		1
- 2	AN3161-P5	•CIRCUIT-BREAKER - P/B NON-TRIP FREE		14
		OR		
	MS25005-5	•CIRCUIT-BREAKER - TRIP FREE PUSH-PULL		
- 3	AN3161-P10	•CIRCUIT-BREAKER - P/B NON-TRIP FREE		4
		OR		
	MS25005-10	•CIRCUIT-BREAKER - TRIP FREE PUSH-PULL		
- 4	AN3161-P10	•CIRCUIT-BREAKER - P/B NON-TRIP FREE (TOW TARGET JETTISON)	001-430	1
		OR		
	MS25005-10	•CIRCUIT-BREAKER - TRIP FREE PUSH-PULL	001-430	
- 5	AN3161-P15	•CIRCUIT-BREAKER - P/B NON-TRIP FREE		1
		OR		
	MS25005-15	•CIRCUIT-BREAKER - TRIP FREE PUSH-PULL		
- 6	AN3161-P20	•CIRCUIT-BREAKER - P/B NON-TRIP FREE		3
		OR		
	MS25005-20	•CIRCUIT-BREAKER - TRIP FREE PUSH-PULL		
- 7	AN3161-P25	•CIRCUIT-BREAKER - P/B NON-TRIP FREE		1
		OR		
	MS25005-25	•CIRCUIT-BREAKER - TRIP FREE PUSH-PULL		
	AN515-8-4	•SCREW -		2
	AN935-8	•WASHER -		2
- 8	AN515-6R5	•SCREW -	001-430	48
	AN515-6R5	•SCREW -	431-	46
	1J1-2-2-4	•JUMPER - WIRE (NAA)		1

-000-

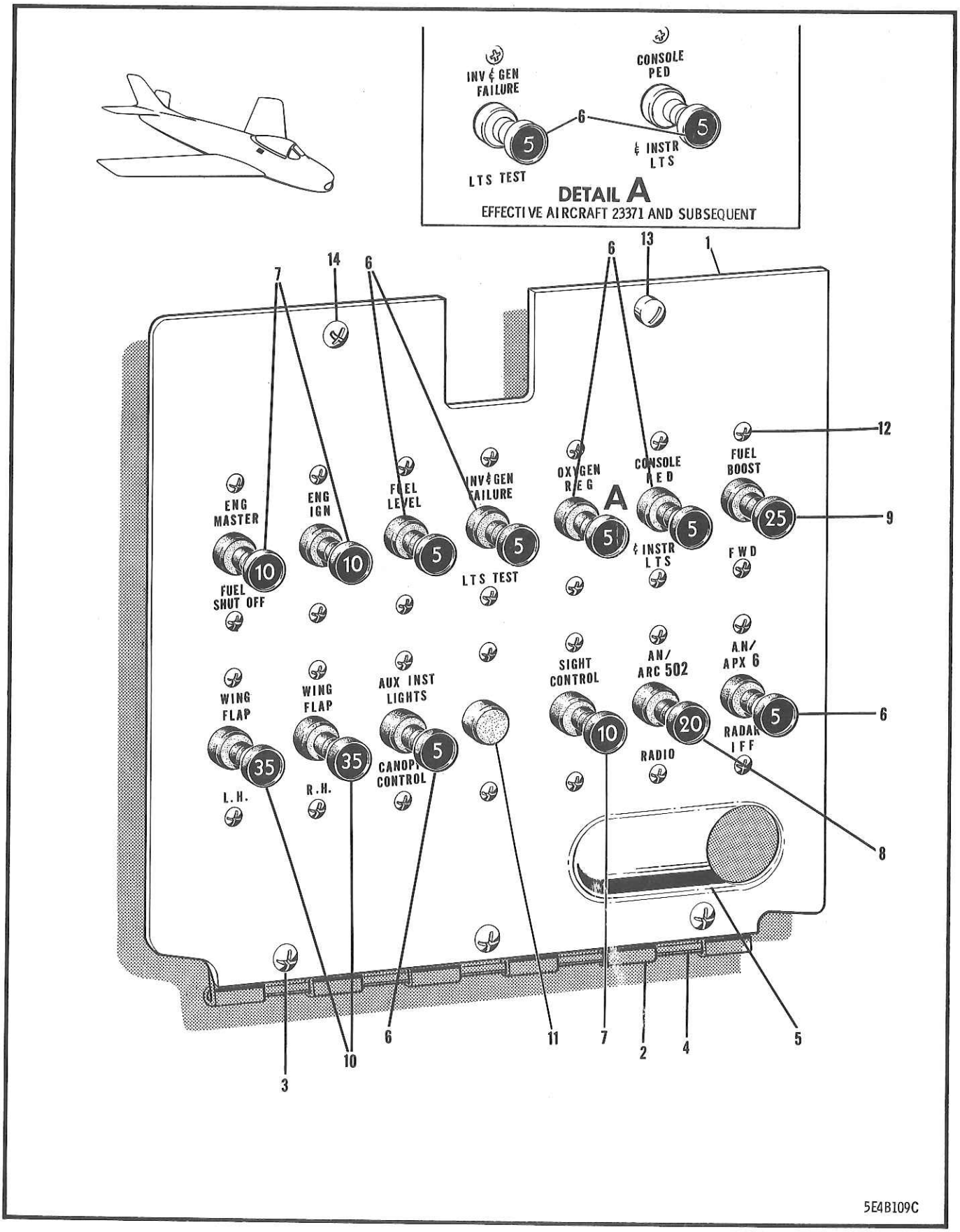

FIGURE 184 CIRCUIT-BREAKER STARBOARD SIDE PANEL

FIGURE AND INDEX NUMBER	GROUP / MAJOR ASSEMBLY / PART NUMBER	ELECTRICAL EQUIPMENT / CIRCUIT-BREAKER STBD SIDE PANEL / 1234567 NOMENCLATURE	CODE	UNITS PER ASSY
185 -	151-54122-60	PANEL ASSY - ELECTRIC RELAY & CONTROL (SEE FIG. 160)	001-050	1
	151-54122-800	PANEL ASSY - ELECTRIC RELAY & CONTROL	051-210	1
	151-54122-802	PANEL ASSY - ELECTRIC RELAY & CONTROL	211-662	1
	151-54122-804	PANEL ASSY - ELECTRIC RELAY & CONTROL	663-	1
- 1	151-54121-10	.PANEL ASSY - ELECTRIC RELAY & CONTROL	001-050	1
	151-54121-800	.PANEL ASSY - ELECTRIC RELAY & CONTROL	051-662	1
	151-54121-802	.PANEL ASSY - ELECTRIC RELAY & CONTROL	663-	1
- 2	6042H39	.RELAY - CLASS B POWER (CHI) (ROCKET JETT) (AS PER EO 05-5E-6A/153)		1
- 3	13B-53027	.BRACKET ASSY - ROCKET JETTISON EMY RELAY (AS PER EO 05-5E-6A/153)		1
- 4	AN4-4	.BOLT - (RELAY TO BRKT & BRKT TO PANEL ATT)		4
- 5	AN3350-1	.RELAY - 50-AMP SPST UNSEALED (CANOPY ACTUATOR CONTROL)		2
- 6	AN3-3	.BOLT - (CANOPY ACTE CONTROL RELAY ATT)		4
- 7	AN3436-2-8	.TERMINAL BLOCK ASSY - ELECTRICAL		1
	AN515-4R6	.SCREW - (TERMINAL BLOCK TO PANEL ATT)		3
	AN365-440	.NUT -		3
- 8	AN961-6	.WASHER -		8
	AN936A6B	.WASHER -		8
- 9	AN341-6	.NUT -		8
-10	151-54397-2	.BRACKET - ELECTRIC RELAY M2 MOUNTING RH		1
-11	172-54025	.BRACKET - ELECTRIC RELAY M2 MOUNTING & CIRCUIT-BREAKER		1
-12	AN3-3	.BOLT - (BRACKET TO PANEL ATTACHING)		4
-13	SPEC 32603	.RELAY - TYPE M2 (GENERATOR FIELD CONTROL) ((G.F.E.) EFF 23001-23370 & (PHC) EFF 23371 & SUBS) OR		1
	SPEC 32603A	.RELAY - TYPE M2 (G.F.E.)(GEN FIELD CTL)		
-14	AN3-3	.BOLT - (RELAY TO BRACKET ATTACHING)		3
	AN3-4	.BOLT - (RELAY TO BRACKET ATTACHING)		1
	AN365-1032	.NUT -		3
-15	AN3161-P20	.CIRCUIT-BREAKER - P/B NON-TRIP FREE (GENERATOR FIELD)		1
-16	AN3161-P15	.CIRCUIT-BREAKER - P/B NON-TRIP FREE (FUEL TRANSFER PUMP)		1
-17	AN515-6R7	.SCREW -		4
-18	PDLM-70	.CIRCUIT-BREAKER - MANUAL RESET (STC) (ALTERNATING HYDRAULIC PUMP)	001-100	1
	C6766-3-70	.CIRCUIT-BREAKER - (STC) (ALTR HYD PUMP)	101-	1
-19	AN520-10R12	.SCREW -		2
-20	32591	.RELAY - GENERATOR OVER VOLTAGE TYPE E2 ((G.F.E.) EFFECTIVE 23001-23370 & (HAE) EFFECTIVE 23371 & SUBS) OR		1
	MIL-R-6467	.RELAY - TYPE E2 (G.F.E.)		
	AN520-10R8	.SCREW - (RELAY TO PANEL ATTACHING)		3
-21	237-EAU	.RELAY ASSY - 10-AMP RESISTIVE 29-VDC (LRC) (ALL BOMBS)		1
	AN515-8R8	.SCREW - (RELAY TO PANEL ATTACHING)		1
	AN520-10R8	.SCREW - (RELAY TO PANEL ATTACHING)		1
-22	G-54226	.RELAY - (GEM) (ROCKET ARMING SOLENOID)		1
	AN515-8R8	.SCREW - (ROCKET ARMING SOLENOID RELAY TO PANEL ATTACHING)		4
-23	AN3316-1	.RELAY - 10-AMP 3PDT UNSEALED(AMO HEAT CTL)	001-210	1
-24	AN515-8R8	.SCREW - (AMO HEAT CTL RELAY TO PANEL ATT)	001-210	2

-000-

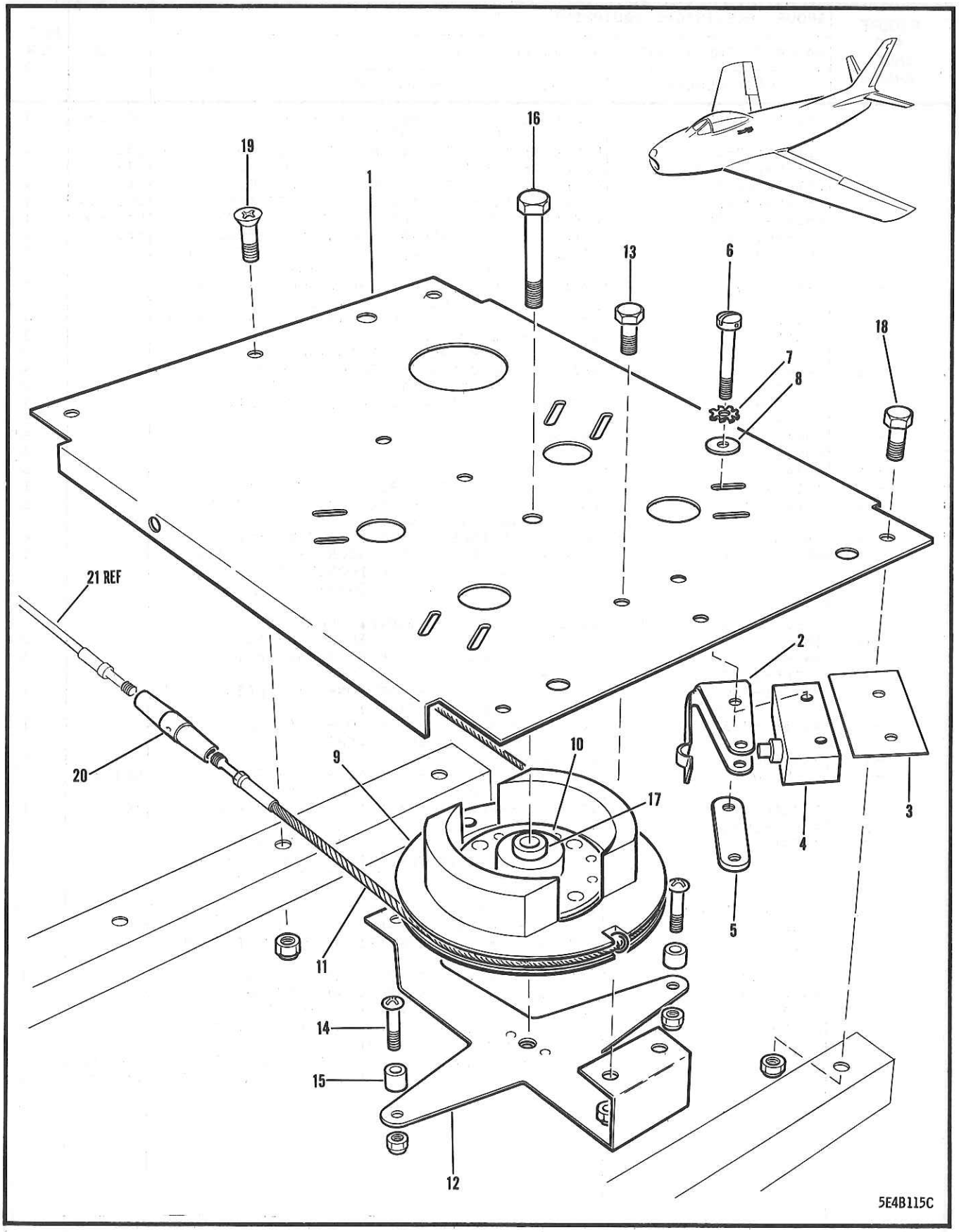

FIGURE 186 FLAP PULLEY & SWITCH CLUSTER
(EFFECTIVE AIRCRAFT 23001 TO 23100 INCL)

FIGURE AND INDEX NUMBER	GROUP ELECTRICAL EQUIPMENT MAJOR ASSEMBLY FLAP PULLEY & SWITCH CLUSTER PART NUMBER	1234567 NOMENCLATURE	CODE	UNITS PER ASSY
186 -	191-54231	ELECTRICAL EQUIP. INSTL - INTER FUSELAGE (SEE FIG. 159)		REF
	170-54071	•CLUSTER ASSY - ELECTRICAL WING FLAP CTL PULLEY & SWITCH (SEE FIG. 162)	001-100	1
- 1	170-54074	••BRACKET - ELECTRICAL WING FLAP PULLEY SUPPORT FUS STA 152	001-100	1
- 2	170-54075	••ACTUATOR - ELECTRICAL WING FLAP SWITCH	001-100	4
- 3	159-48167	••INSULATOR - MICROSWITCH FUEL SELECTOR VALVE CONTROL	001-100	4
- 4	WA3S-BT1	••MICROSWITCH - (MSC) (WINTERIZED)	001-100	4
- 5	134-43056	••PLATE - ENGINE CTL U/SW HOLD-DOWN TAP	001-100	4
- 6	AN500A6-18	••SCREW - (U/SW & ACTUATOR TO BRACKET ATT)	001-100	8
- 7	AN936B8	••WASHER -	001-100	8
- 8	AN960D8	••WASHER -	001-100	8
	170-54072	••PULLEY ASSY - ELECTRICAL WING FLAP SWITCH ACTUATOR FUS STA 152	001-100	1
- 9	170-54072-3	•••PULLEY - ELECTRICAL WING FLAP SWITCH ACTUATOR FUS STA 152	001-100	1
-10	AN218-4	•••BEARING -	001-100	1
	170-54076	••CABLE ASSY - ELECTRICAL WING FLAP REAR	001-100	1
-11	170-54076-3	•••CABLE - ELECTRICAL WING FLAP REAR	001-100	1
	AN669S3LH	•••TERMINAL -	001-100	2
	RA-2487-3	•••TERMINAL - PLAIN BALL SWAGED (ACC) (WING FLAP REAR CABLE)	001-100	1
	170-54073	••GUARD ASSY - ELECTRICAL WING FLAP PULLEY FUS STA 152	001-100	1
-12	170-54073-3	•••GUARD - ELEC WING FLAP PUL FUS STA 152	001-100	1
-13	AN3-3A	••BOLT - (GUARD TO BRACKET ATTACHING)	001-100	3
	AN365-1032	••NUT -	001-100	3
-14	AN515-6R10	••SCREW - (PULLEY GUARD)	001-100	2
-15	NAS43DD-1-16	••SPACER - (PULLEY GUARD)	001-100	2
	AN365-632	••NUT -	001-100	2
-16	AN4-16A	••BOLT - (PULLEY & GUARD TO BRACKET ATT)	001-100	1
-17	NAS43DD-4-40	••SPACER -	001-100	1
-18	AN3-3A	•BOLT - (CLUSTER ATTACHING)	001-100	3
-19	AN509-10R7	•SCREW - (CLUSTER ATTACHING)	001-100	3
-20	AN155-16S	•TURNBUCKLE -	001-100	2
	TA710-10	•CLAMP - ELECTRICAL HARNESS (TAI)	001-100	1
	AN515-8R8	•SCREW -	001-100	1
	AN365-832	•NUT -	001-100	1
-21	151-43079-5	CABLE ASSY - ENGINE CTL QUADT FLAP LEVER (SEE SECTION 5)		REF

-000-

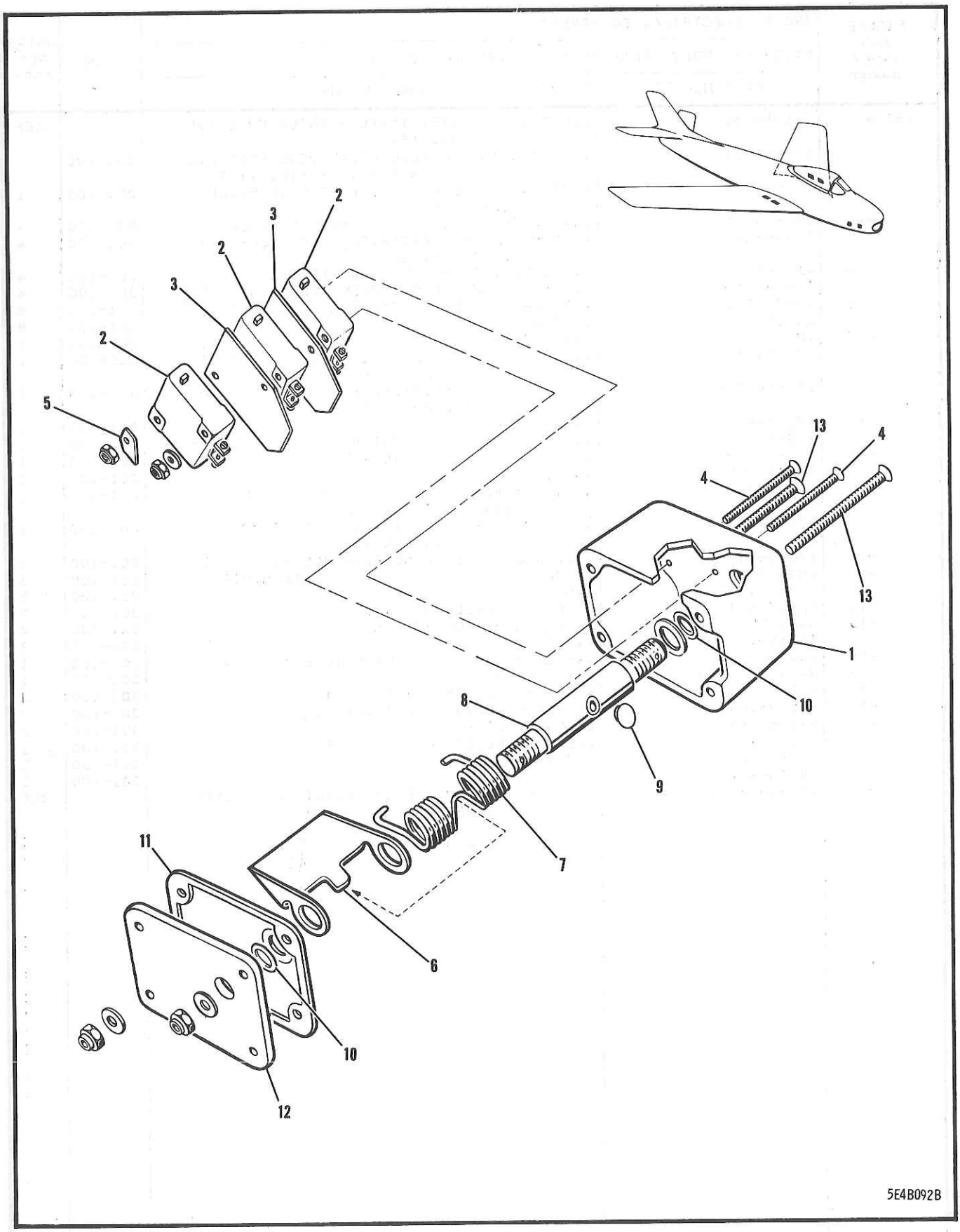

FIGURE 187 ELECTRICAL THREE-UNIT LIMIT SWITCH

FIGURE AND INDEX NUMBER	GROUP	ELECTRICAL EQUIPMENT	CODE	UNITS PER ASSY
	MAJOR ASSEMBLY	ELECTRICAL THREE-UNIT LIMIT SWITCH		
	PART NUMBER	1234567 NOMENCLATURE		
187 -	152-54201-30	SWITCH ASSY - ELECTRICAL THREE-UNIT LIMIT (SEE FIG. 170 & 154)		4
	152-54201-60	SWITCH ASSY - ELECTRICAL THREE-UNIT LIMIT LH (SEE SECTION 4)		1
	152-54201-70	SWITCH ASSY - ELECTRICAL THREE-UNIT LIMIT RH (SEE SECTION 4)		1
- 1	152-54203	.BOX - ELECTRICAL THREE-UNIT LIMIT SWITCH		1
- 2	AN3234-1	.SWITCH - CLASS E LIMIT		3
	1J1-1-1-3	.JUMPER - WIRE (NAA)		1
	32889	.TERMINAL - (AMP) (PREINSULATED)		5
	31889	.TERMINAL - RING TONGUE PREINSULATED (AMP)		1
	35611	.TERMINAL - (AMP) (KNIFE DISCONNECT)		1
	31878	.TERMINAL - RING TONGUE PREINSULATED (AMP)		7
	152-54201-9	.TUBING - ELEC THREE-UNIT LIMIT SWITCH	001-490	1
	8C7B10-9	.COVER - (NAA)	491-	1
- 3	152-54208	.SHIELD - ELEC THREE-UNIT LIMIT SWITCH		2
- 4	AN507-440R24	.SCREW -		2
	AN960-4L	.WASHER -		1
- 5	165-54239	.SPACER - ELEC THREE-UNIT LIMIT SWITCH		1
	AN365-440	.NUT -		2
- 6	151-54324	.ACTUATOR - ELEC THREE-UNIT LIMIT SWITCH		1
- 7	151-54323	.SPRING - ELEC LANDING GEAR SEQUENCE SWITCH		1
- 8	151-54325	.SHAFT - ELEC THREE-UNIT LIMIT SWITCH (ON 152-54201-30)		1
	151-54325-3	.SHAFT - ELECTRICAL THREE-UNIT LIMIT SWITCH (ON 152-54201-60 & -70)		1
- 9	151-54326	.PIN - ELECTRICAL THREE-UNIT LIMIT SWITCH		1
	AN960A516L	.WASHER -		2
-10	AN6290-2	.GASKET -		2
-11	152-54201-952	.GASKET - ELEC THREE-UNIT LIMIT SWITCH		1
-12	152-54204	.COVER - ELECTRICAL THREE-UNIT LIMIT SWITCH		1
-13	AN507-632R32	.SCREW -		2
	AN960-6	.WASHER -		2
	AN364-632	.NUT -		2

-000-

END OF VOLUME 1

(SECTIONS 1 TO 10)

SEE VOLUME 2 FOR CONTINUATION