EO 05-5E-4

ROYAL CANADIAN AIR FORCE



Amended
4-10-67

PART LIST
SABRE 5, 5A AND 6

(VOL 2 OF 2)

(Pages 835-1506)

REVISION NOTICE

LATEST REVISED PAGES SUPERSEDE THE SAME PAGES OF PREVIOUS DATE

Insert revised pages into basic publication.
Destroy superseded pages.

ISSUED ON AUTHORITY OF THE CHIEF OF THE DEFENCE STAFF

16 JAN 59

Revised 31 Jul 67

LIST OF RCAF REVISIONS

(VOLUME 2 OF 2)

DATE	PAGE NO
21 Mar 60	837 to 840 incl.
21 Mar 60	847
21 Mar 60	928 to 930 incl.
21 Mar 60	938
21 Mar 60	953
21 Mar 60	1011
21 Mar 60	1013
21 Mar 60	1022
21 Mar 60	1040
21 Mar 60	1042
21 Mar 60	1057
21 Mar 60	1063
21 Mar 60	1097
21 Mar 60	1103
21 Mar 60	1104
21 Mar 60	1114
21 Mar 60	1123
21 Mar 60	1127
21 Mar 60	1128
21 Mar 60	1159
21 Mar 60	1175
21 Mar 60	1181
21 Mar 60	1184 to 1188 incl.
21 Mar 60	1190 to 1194 incl.
21 Mar 60	1197
21 Mar 60	1199
21 Mar 60	1204
21 Mar 60	1209
21 Mar 60	1214
21 Mar 60	1216
21 Mar 60	1222 to 1224 incl.
21 Mar 60	1227
21 Mar 60	1234 to 1238 incl.
21 Mar 60	1241
21 Mar 60	1243
21 Mar 60	1283
21 Mar 60	1290
21 Mar 60	1291
21 Mar 60	1359
21 Mar 60	1361 to 1506 incl.
20 Jan 61	Cover
26 Aug 63	1112
24 Apr 64	1469
31 Jul 67	863
31 Jul 67	864
31 Jul 67	864A
31 Jul 67	997

SECTION 11

HYDRAULIC EQUIPMENT

TABLE OF CONTENTS

FIGURE	TITLE	PAGE
188	NOSE GEAR OPERATING HYDRAULIC EQUIPMENT	836
189	NOSE GEAR STEERING HYDRAULIC EQUIPMENT	842
190	FUSELAGE STA 53-135 PORT SIDE HYDRAULIC	846
191	FUSELAGE STA 53-135 STARBOARD SIDE HYDRAULIC	850
192	NOSE GEAR & FAIRING DOOR HYDRAULIC EQUIPMENT	856
193	FUSELAGE STA 133-178 HYDRAULIC EQUIPMENT	860
194	SPEEDBRAKE HYDRAULIC EQUIPMENT	866
195	FUSELAGE STA 178-236 UTILITY HYDRAULIC (PORT)	870
196	FUSELAGE STA 178-236 UTILITY HYDRAULIC (STBD)	876
197	DOOR & LANDING GEAR STARBOARD SIDE HYDRAULIC	880
198	FUSELAGE STA 178-236 NORMAL HYDRAULIC EQUIPMENT	886
199	FUSELAGE STA 178-236 ALTERNATE HYDRAULIC EQUIPMENT	892
200	CENTRE WING HYDRAULIC EQUIPMENT	896
201	MAIN GEAR & FLAP HYDRAULIC EQUIPMENT	902
202	PORT WING FORWARD SPAR HYDRAULIC EQUIPMENT	908
203	PORT WING REAR SPAR HYDRAULIC EQUIPMENT	912
204	STARBOARD WING FORWARD SPAR HYDRAULIC EQUIPMENT	916
205	STARBOARD WING REAR SPAR HYDRAULIC EQUIPMENT	920
206	OUTER WING SURFACE CONTROL HYDRAULIC EQUIPMENT	924
207	REAR FUSELAGE UTILITY HYDRAULIC EQUIPMENT	928
208	REAR FUSELAGE NORMAL HYDRAULIC EQUIPMENT	932
209	PORT SIDE STA 244-298 ALTERNATE HYDRAULIC	936
210	PORT SIDE STA 298-363 ALTERNATE HYDRAULIC	940
211	REAR FUSELAGE STARBOARD SIDE ALTERNATE HYDRAULIC	946
212	EMPENNAGE HYDRAULIC EQUIPMENT	952
213	NOSE GEAR ALTERNATE EXTENSION ACCUMULATOR	956
214	NOSE GEAR ACTUATING CYLINDER	960
215	NOSE GEAR EXTENSION CYLINDER	962
216	NOSE GEAR FAIRING DOOR CYLINDER	964
217	MASTER BRAKE CYLINDER BELL-CRANK	966
218	PARKING BRAKE VALVE CONTROL	968
219	PARKING BRAKE COMPENSATOR VALVE	972
220	MASTER BRAKE CYLINDER	974
221	UTILITY SYSTEM RESERVOIR	976
222	SPEEDBRAKE SELECTOR VALVE	980
223	MAIN GEAR FAIRING DOOR SELECTOR VALVE	982
224	NORMAL HYDRAULIC RESERVOIR	984
225	NORMAL SURFACE CONTROL ACCUMULATOR	986
226	UTILITY SYSTEM 200 CUBIC INCH ACCUMULATOR	988
227	AIR-PRESSURE ACCUMULATOR	990
228	ACCUMULATOR AIR-PRESSURE GAUGE & VALVE	992
229	UTILITY RESERVOIR REGULATOR	994
230	SURFACE CONTROL HYDRAULIC FILTERS	996
231	SURFACE CONTROL NORMAL HYDRAULIC BY-PASS VALVE	998
232	MAIN LANDING GEAR OPERATING CYLINDER	1000
233	MAIN LANDING GEAR UPLOCK RELEASE CYLINDER	1002
234	MAIN LANDING GEAR DOWNLOCK CYLINDER	1004
235	MAIN LANDING GEAR FAIRING DOOR CYLINDER	1006
236	ALTERNATE POWER CONTROL PUMP	1008
237	POWER CONTROL COMPENSATOR	1010
238	SPEEDBRAKE OPERATING CYLINDER	1012
239	ALTERNATE POWER STARBOARD ACCUMULATOR	1014
240	ALTERNATE HYDRAULIC RESERVOIR	1016
241	STABILIZER CONTROL ACTUATOR	1018
242	STABILIZER CONTROL ACTUATOR CYLINDER	1022
243	STABILIZER CONTROL VALVE	1024

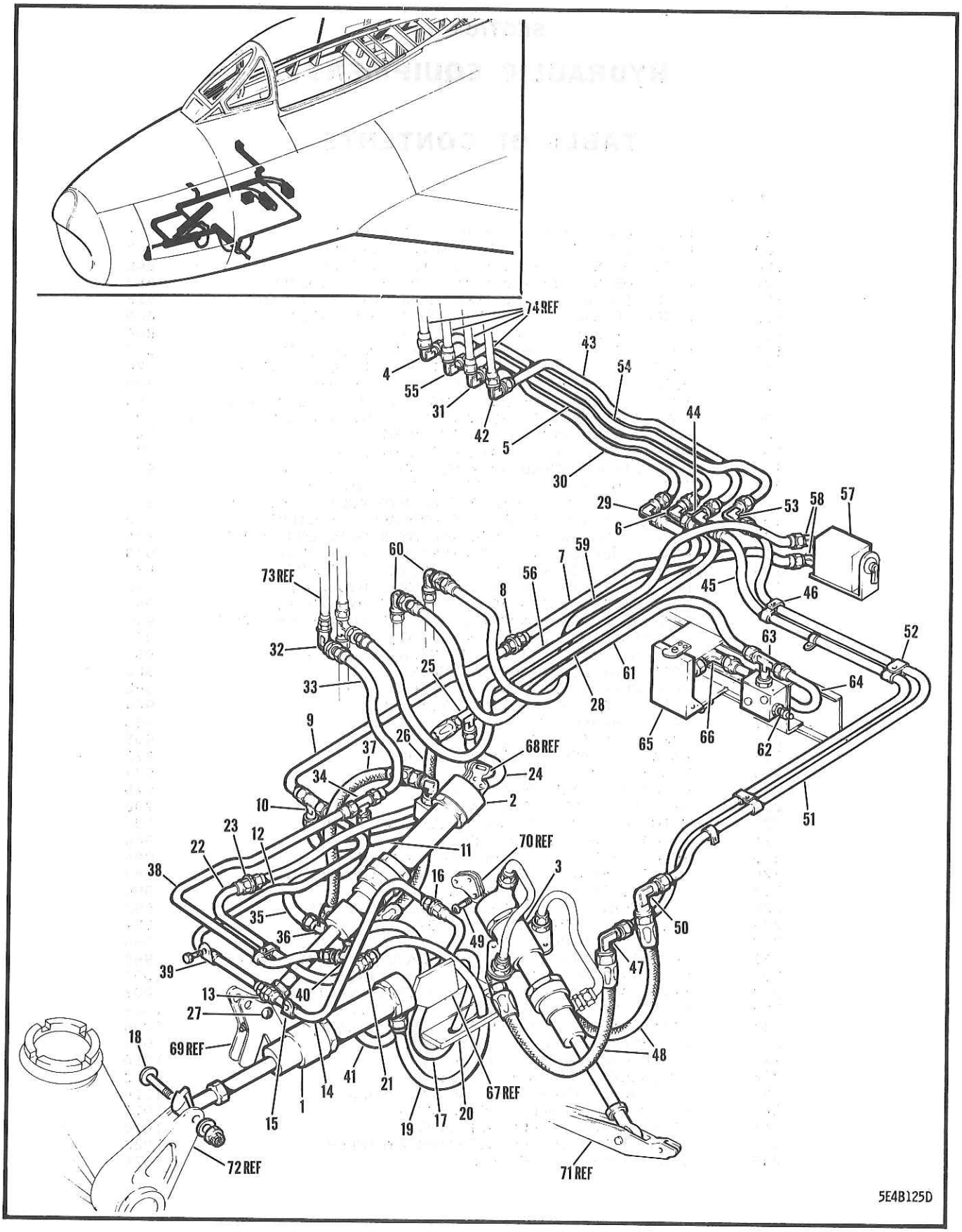

FIGURE 188 NOSE GEAR OPERATING HYDRAULIC EQUIPMENT

FIGURE AND INDEX NUMBER	GROUP / MAJOR ASSEMBLY / PART NUMBER	HYDRAULIC EQUIPMENT / NOSE GEAR OPERATING HYDRAULIC EQUIPMENT / 1234567 NOMENCLATURE	CODE	UNITS PER ASSY
188 -	172-58058	HYDRAULIC EQUIP. INSTL - NOSE GEAR & STEER. FUS STA 0-84 (SEE SECTION 3)		NP
- 1	151-58633-9	.CYLINDER ASSY - HYDRAULIC NOSE GEAR EXTN (COMPLETE) (SEE FIG. 215)		REF
- 2	151-58630-10	.CYLINDER ASSY - HYDRAULIC NOSE GEAR OPR COMPLETE (SEE FIG. 214)		REF
- 3	151-58645-3	.CYLINDER ASSY - HYDRAULIC NOSE GEAR FAIR. DOOR OPERATING COMPL (SEE FIG. 216)		REF
- 4	AN833-4D	.ELBOW -		1
	AN960D716	.WASHER -		1
	AN924-4D	.NUT -		1
- 5	191-58801-59	.LINE ASSY - NOSE GEAR DOWN (ELBOW STA 81 TO ELBOW STA 82)		1
- 6	AN837-4D	.ELBOW -		1
	AN960D716	.WASHER -		1
	AN924-4D	.NUT -		1
- 7	191-58801-13	.LINE ASSY - NOSE GEAR DOWN (ELBOW STA 82 TO UNION STA 70)		1
- 8	AN815-4D	.UNION -		1
- 9	191-58801-35	.LINE ASSY - NOSE GEAR DOWN (FLOW REGULATOR TO TEE STA 54)		1
-10	AN834-4D	.TEE -		1
	AN960D716	.WASHER -		1
	AN924-4D	.NUT -		1
-11	MS28741-4-0084	.HOSE ASSY - DETACHABLE END FTG MED PRESS.		1
-12	191-58801-49	.LINE ASSY - NOSE GEAR DOWN (TEE STA 54 TO UNION STA 42)		1
-13	AN815-4D	.UNION -		1
-14	191-58801-15	.LINE ASSY - NOSE GEAR DOWN (RESTRICTOR TO UNION STA 42)		1
-15	AN742D6C	.CLAMP -		2
	NAS43DD3-28	.SPACER -		2
	AN515-8R14	.SCREW -		2
	AN365-832	.NUT -		2
-16	AN832-4	.UNION -		1
	AN960D716	.WASHER -		1
	AN924-4D	.NUT -		1
-17	151-58828-65	.LINE ASSY - NOSE GEAR DOWN (UNION STA 54 TO SHUTTLE VALVE STA 48)		1
-18	AN26-18	.BOLT - MPI (EXTENSION CYLINDER ATTACHING)		1
	AN320-6	.NUT -		1
	AN380-3-4	.COTTER-PIN -		1
	AN960-616	.WASHER -		1
	AN365-720	.NUT -		1
-19	161-58805-15	.LINE ASSY - NOSE GEAR UP (UNION STA 47 TO NOSE GEAR EXTENSION CYLINDER)		1
-20	172-58058-950	.FAIRLEAD - NOSE GEAR & STEERING HYDRAULIC		1
	NAS221-23	.SCREW -		1
	NAS221-32	.SCREW -		1
-21	AN832-4D	.UNION -		1
	AN960D716	.WASHER -		1
	AN924-4D	.NUT -		1
-22	191-58801-43	.LINE ASSY - NOSE GEAR UP (UNION STA 47 TO UNION STA 50)		1
-23	AN815-4D	.UNION -		1
-24	161-58803-951	.LINE ASSY - NOSE GEAR UPPER (STA 62 TO STA 50)		1
-25	AN804D4	.TEE -		1
	AN960D716	.WASHER -		1
	AN924-4D	.NUT -		1
-26	MS28741-4-0120	.HOSE ASSY - DETACHABLE END FTG MED PRESS.	001-430	1
	3H3-4-0120	.HOSE ASSY - PLASTIC COVERED (NAA)	431-	1
-27	AN27-19	.BOLT - MPI (GEAR OPERATING CYLINDER)		1
	AN27-23	.BOLT - MPI (GEAR OPERATING CYLINDER)		1

FIGURE AND INDEX NUMBER	GROUP	HYDRAULIC EQUIPMENT	CODE	UNITS PER ASSY
	MAJOR ASSEMBLY	NOSE GEAR OPERATING HYDRAULIC EQUIPMENT		
	PART NUMBER	1234567 NOMENCLATURE		
188 -	AN320-7	•NUT -		2
	AN380-3-3	•COTTER-PIN -		2
-28	191-58801-33	•LINE ASSY - NOSE GEAR UPPER (ELBOW STA 80 TO TEE STA 63)		1
	AN742D6C	•CLAMP -		4
	AN520-10R8	•SCREW -		2
	AN365-1032	•NUT -		2
-29	AN837-4D	•ELBOW -		2
	AN960D716	•WASHER -		1
	AN924-4D	•NUT -		1
-30	191-58801-61	•LINE ASSY - NOSE GEAR UP (ELBOW STA 81 TO ELBOW STA 82)		1
-31	AN833-4D	•ELBOW -		1
-32	AN837-4D	•ELBOW -		1
	AN960D716	•WASHER -		1
	AN924-4D	•NUT -		1
-33	170-58803-79	•LINE ASSY - EMERGENCY NOSE GEAR DOWN (UNION STA 60 TO TEE STA 53)		1
-34	AN824-4	•TEE -		1
-35	151-58828-951	•LINE ASSY - EMERGENCY NOSE GEAR DOWN (STA 55 TO STA 54)		1
-36	AN833-4D	•ELBOW -		1
	AN960D716	•WASHER -		1
	AN924-4D	•NUT -		1
-37	MS28741-4-0100	•HOSE ASSY - DETACHABLE END FTG MED PRESS•		1
-38	191-58801-41	•LINE ASSY - EMERGENCY NOSE GEAR DOWN (TEE STA 55 TO ELBOW STA 47)		1
-39	AN742D6C	•CLAMP -		2
	AN520-10R8	•SCREW -		1
	AN365-1032	•NUT -		1
-40	AN833-4D	•ELBOW -		1
	AN960D716	•WASHER -		1
	AN924-4D	•NUT -		1
-41	151-58828-67	•LINE ASSY - EMERGENCY NOSE GEAR DOWN (ELL• STA 47 TO SHUTTLE VALVE STA 47)		1
-42	AN833-4D	•ELBOW -		1
	AN960D716	•WASHER -		1
	AN924-4D	•NUT -		1
-43	191-58801-57	•LINE ASSY - FAIRING DOOR OPEN (ELBOW STA 81 TO ELBOW STA 83)		1
-44	AN837-4D	•ELBOW -		1
	AN960D716	•WASHER -		1
	AN924-4D	•NUT -		1
-45	191-58801-25	•LINE ASSY - FAIRING DOOR OPEN (FAIRING DOOR CYLINDER TO ELBOW STA 83)		1
-46	AN742D6C	•CLAMP -		1
	AN520-10R8	•SCREW -		1
	AN365-1032	•NUT -		1
-47	AN837-4D	•ELBOW -		1
	AN960D716	•WASHER -		1
	AN924-4D	•NUT -		1
-48	MS28741-4-0120	•HOSE ASSY - DETACHABLE END FTG MED PRESS•	001-430	1
	3H3-4-0120	•HOSE ASSY - PLASTIC COVERED (NAA)	431-	1
-49	AN6-16A	•BOLT - MPI (DOOR OPERATING CYLINDER)		1
	AN26-15	•BOLT - MPI (DOOR OPERATING CYLINDER)		1
	AN960-616	•WASHER -		2
	AN320-6	•NUT -		1
	AN380-3-3	•COTTER-PIN -		1
-50	AN833-4D	•ELBOW -		1
	AN960D716	•WASHER -		1
	AN924-4D	•NUT -		1
-51	191-58801-27	•LINE ASSY - FAIRING DOOR CLOSE (CYLINDER TO ELBOW STA 82)		1
-52	AN742D6C	•CLAMP -		7

FIGURE AND INDEX NUMBER	GROUP	HYDRAULIC EQUIPMENT	CODE	UNITS PER ASSY
	MAJOR ASSEMBLY	NOSE GEAR OPERATING HYDRAULIC EQUIPMENT		
	PART NUMBER	1234567 NOMENCLATURE		
188 -	AN520-10R8	•SCREW -		4
	AN365-1032	•NUT -		3
-53	AN837-4D	•ELBOW -		1
	AN960D716	•WASHER -		1
	AN924-4D	•NUT -		1
-54	191-58801-9	•LINE ASSY - FAIRING DOOR CLOSE (ELBOW STA 81 TO ELBOW STA 82)		1
-55	AN833-4D	•ELBOW -		1
	AN837-4D	•ELBOW -		1
	AN960D716	•WASHER -		2
	AN924-4D	•NUT -		1
-56	172-58805-9	•LINE ASSY - EMERGENCY NOSE GEAR PRESSURE (TEE STA 62 TO ELBOW ON DUMP VALVE)		1
	172-58642-3	•VALVE ASSY - HYDRAULIC EMERGENCY NOSE GEAR EXTENSION DUMP COMPLETE		1
-57	20176	••VALVE - (SVL) (MANUAL SHUT-OFF) OR		1
	27100	••VALVE - MANUAL SHUT-OFF HYDRAULIC (HRM) OR		
	10-1002	••VALVE - (PII) (MANUAL SHUT-OFF)		
-58	AN837-4D	••ELBOW -		2
	AN6290-4	••GASKET -		2
	AN6291-4	••RING -		2
	AN6289-4	••NUT -		2
	AN501A10-4	•SCREW -		2
-59	191-58801-21	•LINE ASSY - EMERGENCY NOSE GEAR (DUMP RET ELBOW ON DUMP VALVE TO ELBOW STA 65)		1
-60	AN837-4D	•ELBOW -		1
	AN960D716	•WASHER -		1
	AN924-4D	•NUT -		1
-61	172-58805-5	•LINE ASSY - EMY NOSE GEAR ACCUM A/PRESS (TEE ON VALVE TO ELBOW STA 64)		1
	AN742D6C	•CLAMP -		4
	AN520-10R8	•SCREW -		2
	AN365-1032	•NUT -		2
	172-58643-807	•VALVE ASSY - HYDRAULIC ACCUMULATOR AIR		1
	161-58117	••FITTING - HYDRAULIC ACCUM AIR VALVE MOUNT		1
-62	AN6287-1	••VALVE ASSY - 3/4-INCH HEXAGON H/PRESS AIR		1
-63	AN834-4D	••TEE -		1
	AN6290-4	••GASKET -		1
	AN6291-4	••RING -		1
	AN6289-4	••NUT -		1
	AN501A10-22	•SCREW -		2
-64	172-58805-3	•LINE ASSY - EMERGENCY ACCUM A/PRESS (TEE ON AIR VALVE TO ELBOW ON AIR GAUGE)		1
	170-58639-805	•GAUGE ASSY - HYDRAULIC ACCUM AIR-PRESSURE COMPLETE STA 205 CANTED		1
-65	AN5771T7A	••GAUGE - SINGLE 1-7/8 DIAL PRESSURE		1
-66	AN833-4D	••ELBOW -		1
	AN6290-4	••GASKET -		1
	AN6291-4	••RING -		1
	AN6289-4	••NUT -		1
	170-58173-9	••BRACKET ASSY - HYDRAULIC ACCUM A/PRESS GAUGE STA 205 CANTED		1
	AN515-6R12	••SCREW -		4
	A6939-632-375	••SPEED-NUT - CAGE TYPE (TIN) (FRONT MOUNTING)		4
	AN501A10-8	•SCREW -		4
-67	140-34522	FITTING ASSY - NOSE GEAR EXTN CYLINDER ATT (SEE SECTION 4)		REF
-68	151-34506	BELL-CRANK ASSY - NOSE GEAR RETR CYL ATT (SEE SECTION 4)		REF
-69	151-34145	BELL-CRANK ASSY - NOSE GEAR DRAG BRACE RETR (SEE SECTION 4)		REF

FIGURE AND INDEX NUMBER	GROUP	HYDRAULIC EQUIPMENT	CODE	UNITS PER ASSY
	MAJOR ASSEMBLY	NOSE GEAR OPERATING HYDRAULIC EQUIPMENT		
	PART NUMBER	1234567 NOMENCLATURE		
188 -70	140-34545	BELL-CRANK ASSY - NOSE WHEEL DOOR HYD CYL ATTACHING (SEE SECTION 4)		REF
-71	140-34302-13	HINGE ASSY - NOSE GEAR WHEEL DOOR FORWARD (SEE SECTION 4)		REF
-72	165-34510	ARM - NOSE GEAR EXTN CYL TRUNNION ACTUATOR (SEE SECTION 4)		REF
-73	CROSS REFERENCE	LINE ASSY - (SEE FIG. 191)		REF
-74	CROSS REFERENCE	LINE ASSY - (SEE FIG. 192)		REF
		(CONTINUED SEE FIG. 189)		

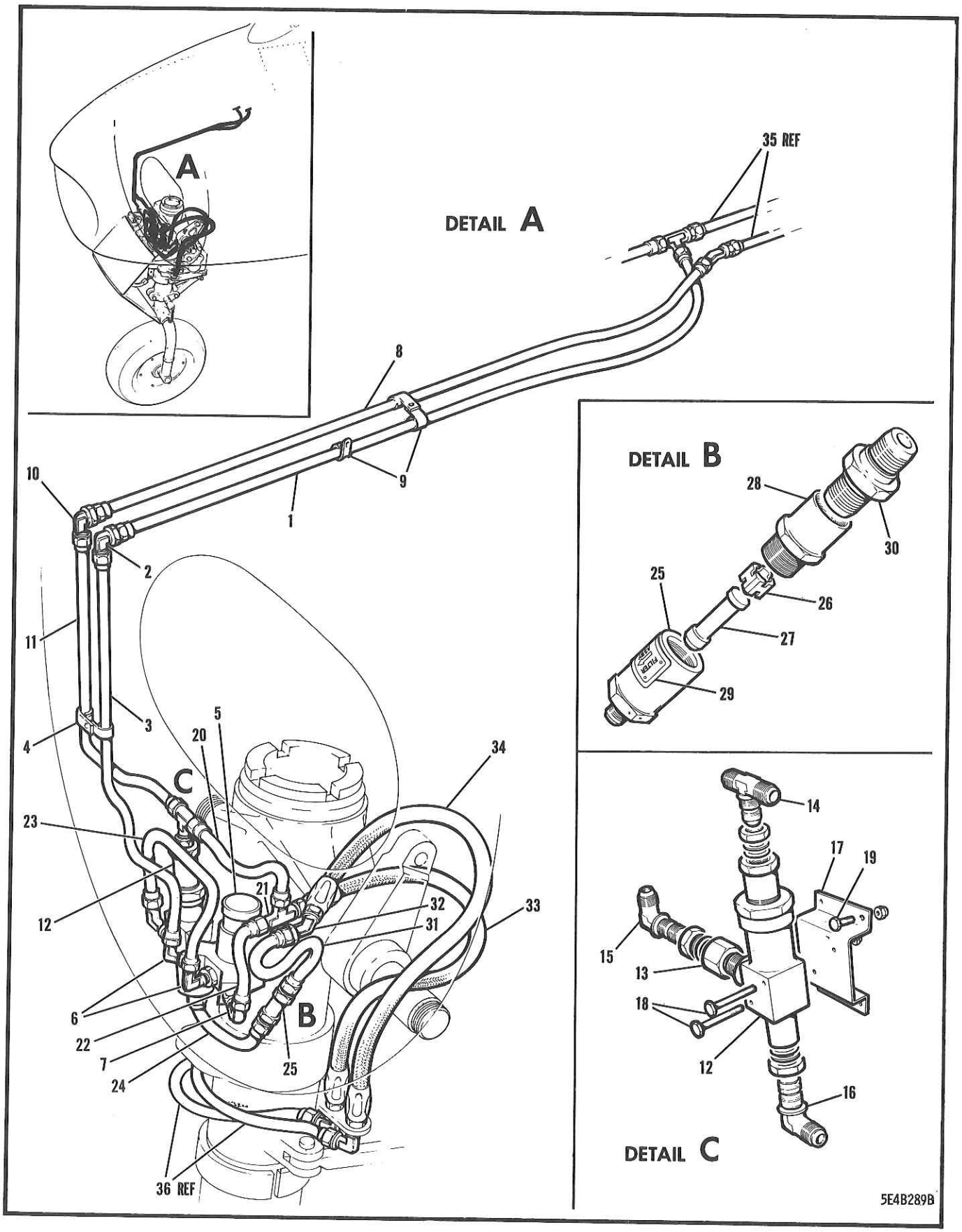

FIGURE 189 NOSE GEAR STEERING HYDRAULIC EQUIPMENT

FIGURE AND INDEX NUMBER	GROUP HYDRAULIC EQUIPMENT MAJOR ASSEMBLY NOSE GEAR STEERING HYDRAULIC EQUIPMENT		CODE	UNITS PER ASSY
	PART NUMBER	1234567 NOMENCLATURE		
189 -	172-58058	HYDRAULIC EQUIP. INSTL - NOSE GEAR & STEER. FUSELAGE STA 0-84 (SEE FIG. 188)		REF
- 1	191-58801-19	.LINE ASSY - UTILITY PRESSURE (ELBOW STA 26 TO TEE STA 56)		1
- 2	AN833-4D	.ELBOW -		1
	AN960D716	.WASHER -		1
	AN924-4D	.NUT -		1
- 3	191-58801-17	.LINE ASSY - UTILITY PRESSURE (ELBOW STA 26 TO SHUT-OFF VALVE)		1
- 4	AN742D6C	.CLAMP -		2
	AN520-10R8	.SCREW -		1
	AN365-1032	.NUT -		1
	170-58645-3	.VALVE ASSY - HYDRAULIC NOSE GEAR STEERING SHUT-OFF (COMPLETE)		1
- 5	23569-3	..VALVE - SOLENOID 3-WAY OPERATION (ADE) (FOR BREAKDOWN SEE EO 15-70CS-4)		1
- 6	AN833-4D	..ELBOW -		2
- 7	AN837-4D	..ELBOW -		1
	AN6290-4	..GASKET -		3
	AN6291-4	..RING -		3
	AN6289-4	..NUT -		3
	AN3-3A	.BOLT -		4
	AN936A10	.WASHER -		4
- 8	172-58818-59	.LINE ASSY - UTILITY SYSTEM RETURN (ELBOW STA 26 TO UNION STA 53)		1
- 9	AN742D6	.CLAMP -		3
	AN520-10R8	.SCREW -		2
	AN365-1032	.NUT -		2
-10	AN833-4D	.ELBOW -		1
	AN960D716	.WASHER -		1
	AN924-4D	.NUT -		1
-11	170-58807-27	.LINE ASSY - UTILITY RETURN (PRESS. REDUCER TEE TO ELBOW STA 26)		1
	151-58679-15	.VALVE ASSY - HYD PRESSURE-REDUCING (COMPL)		1
-12	151-58079-5	..VALVE ASSY - HYDRAULIC PRESSURE-REDUCING (FOR BREAKDOWN SEE EO 15-718C-4)		1
-13	AN893-2D	..BUSHING -		1
	AN6290-4	..GASKET -		2
	AN6290-6	..GASKET -		2
	AN6291-4	..RING -		2
	AN6291-6	..RING -		1
	AN6289-4	..NUT -		2
	AN6289-6	..NUT -		1
-14	AN834-4D	..TEE -		1
-15	AN833-4D	..ELBOW -		1
-16	AN833-6D	..ELBOW -		1
-17	151-58310	..BRACKET - HYD PRESSURE-REDUCING VALVE		1
-18	AN3-16A	..BOLT -		2
	AN365-1032	..NUT -		2
-19	AN3-3A	.BOLT -		4
	AN365-1032	.NUT -		4
-20	151-58828-77	.LINE ASSY - SYSTEM RETURN (TEE STA 27 TO PRESSURE REDUCER)		1
-21	AN804D4	.TEE -		1
	AN960D716	.WASHER -		1
	AN924-4D	.NUT -		1
-22	151-58828-35	.LINE ASSY - SYSTEM RETURN (TEE STA 26 TO PRESSURE REDUCER)		1
-23	191-58801-53	.LINE ASSY - UTILITY SYS PRESSURE (SOLENOID VALVE TO PRESSURE REDUCER)		1

FIGURE AND INDEX NUMBER	GROUP HYDRAULIC EQUIPMENT MAJOR ASSEMBLY NOSE GEAR STEERING HYDRAULIC EQUIPMENT PART NUMBER	1234567 NOMENCLATURE	CODE	UNITS PER ASSY
189 -24	191-58801-55	•LINE ASSY - UTILITY PRESSURE (REDUCER TO PRESSURE REDUCER)		1
	151-58010-3	•FILTER ASSY - HYDRAULIC 1/4-IN. TUBE SIZE		1
-25	151-58314-3	••BODY - HYDRAULIC FLT 1/4-IN. TUBE SIZE		1
-26	141-58396	••GUIDE - HYDRAULIC TWO-WAY RESTRICTOR VALVE FILTER		1
-27	36837	••ELEMENT ASSY - TYPE JET-66 (PUR)		1
-28	151-58313	••ADAPTER - HYDRAULIC FLT 1/4-IN. TUBE SIZE		1
	AN6290-6	••GASKET -		1
-29	13-71031	••NAME-PLATE - HYDRAULIC FILTER		1
	AN6290-6	•GASKET -		1
-30	AN815-6D	•UNION -		1
-31	191-58801-11	•LINE ASSY - UTILITY PRESSURE (FILTER TO ELBOW STA 26)		1
-32	AN837-4D	•ELBOW -		1
	AN960D716	•WASHER -		1
	AN924-4D	•NUT -		1
-33	3H3-4-0174	•HOSE - PLASTIC COVERED (NAA)		1
-34	3H3-4-0200	•HOSE - PLASTIC COVERED (NAA)		1
-35	CROSS REFERENCE	LINE ASSY - (SEE FIG. 191)		REF
-36	CROSS REFERENCE	LINE ASSY - (SEE SECTION 4)		REF

-000-

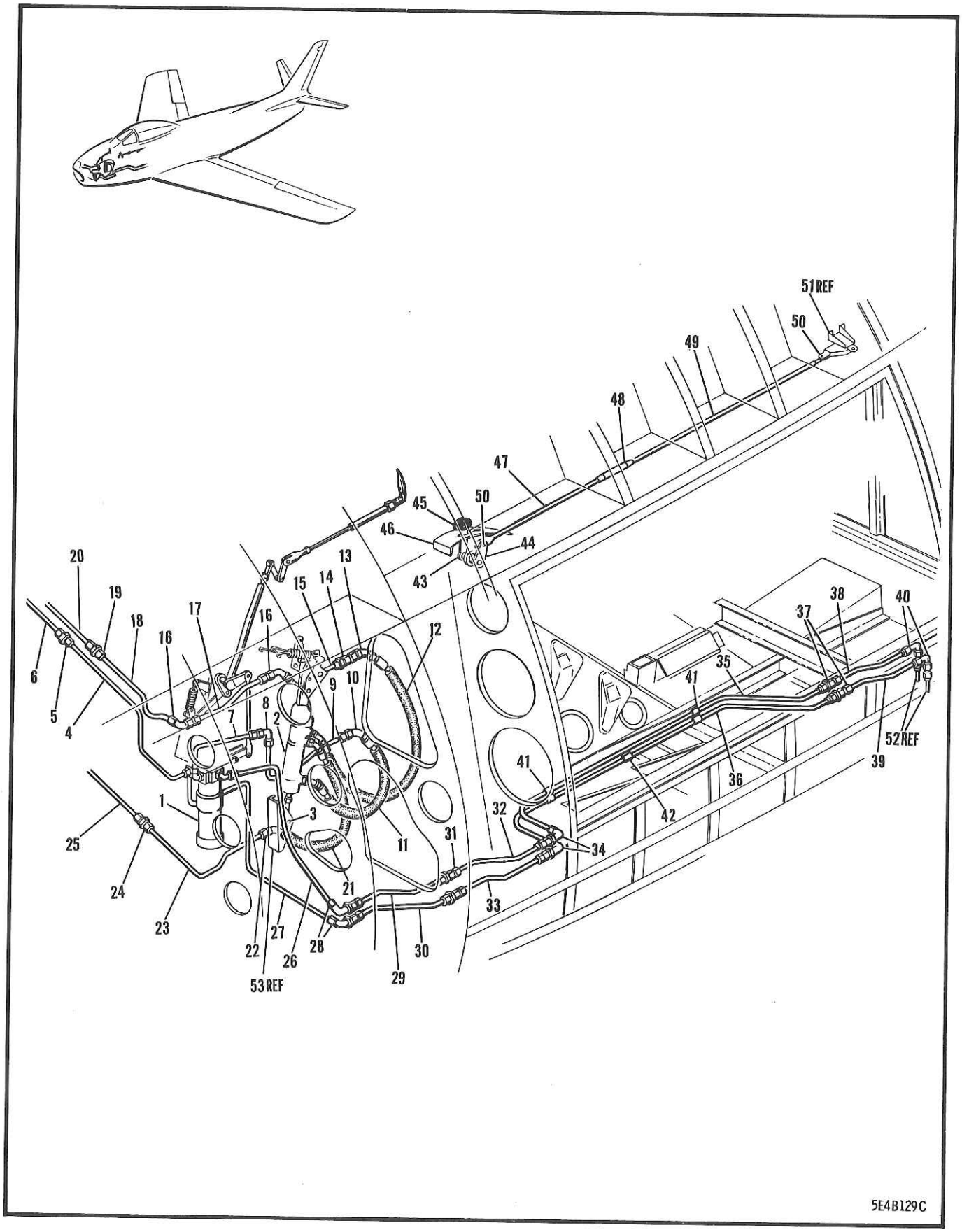

FIGURE 190 FUSELAGE STA 53-135 PORT SIDE HYDRAULIC EQUIPMENT

FIGURE AND INDEX NUMBER	GROUP HYDRAULIC EQUIPMENT MAJOR ASSEMBLY FUSELAGE STA 53-135 PORT SIDE HYDRAULIC EQUIPMENT PART NUMBER	1234567 NOMENCLATURE	CODE	UNITS PER ASSY
190 -	172-58059	HYDRAULIC EQUIP. INSTL - FUS STA 53 TO 135 (SEE SECTION 3)		NP
- 1	151-58635-3	.VALVE & COMPENSATOR ASSY - HYD PARKING BRAKE COMPLETE (SEE FIG. 219)		REF
- 2	172-58650-10	.CYLINDER ASSY - HYDRAULIC MASTER BRAKE (COMPLETE) (SEE FIG. 220)		REF
- 3	AN4-11A	.BOLT -		1
	AN960-10	.WASHER -		1
	AN365-428	.NUT -		1
	AN3-14A	.BOLT - (VALVE & COMPENSATOR RETAINING)		3
- 4	170-58804-35	.LINE ASSY - STBD BRAKE PRESSURE (UNION TO PARKING BRAKE COMPENSATOR)		1
	170-58804-966	.SPARE PART FOR 170-58804-35		
- 5	AN815-4D	.UNION -		1
- 6	170-58804-951	.LINE ASSY - STBD BRAKE PRESSURE (ELBOW STA 53 TO UNION)		1
- 7	170-58805-61	.LINE ASSY - STBD BRAKE PRESSURE (ELBOW STA 62 TO PARKING BRAKE COMPENSATOR)		1
- 8	AN833-4D	.ELBOW -		1
	AN960D716	.WASHER -		1
	AN924-4D	.NUT -		1
- 9	170-58805-953	.LINE ASSY - PORT BRAKE PRESSURE (ELBOW STA 71 TO ELBOW STA 62)		1
-10	AN837-4D	.ELBOW -		1
	AN960D716	.WASHER -		1
	AN924-4D	.NUT -		1
-11	3H3-4-0150	.HOSE ASSY - PLASTIC COVERED (NAA)		1
-12	3H3-4-0280	.HOSE ASSY - PLASTIC COVERED (NAA)		1
	AN919-6D	.REDUCER -		1
	AN6290-6	.GASKET -		1
-13	AN928-6D	.ELBOW -		1
	AN6290-6	.GASKET -		1
-14	AN832-6D	.UNION -		1
	AN960D916	.WASHER -		1
	AN924-6D	.NUT -		1
-15	172-58807-63	.LINE ASSY - PORT BRAKE RETURN (UNION STA 71 TO ELBOW STA 62)		1
-16	AN837-6D	.ELBOW -		2
	AN960D916	.WASHER -		2
	AN924-6D	.NUT -		2
-17	170-58805-955	.LINE ASSY - PORT BRAKE RETURN (ELBOW STA 62 TO ELBOW STA 53)		1
-18	170-58804-953	.LINE ASSY - PORT BRAKE RETURN (ELBOW STA 53 TO UNION)		1
	AN742D4	.CLAMP -		2
	AN742D6	.CLAMP -		4
	AN520-10R8	.SCREW -		4
	AN365-1032	.NUT -		4
-19	AN815-6D	.UNION -		1
-20	170-58804-31	.LINE ASSY - PORT BRAKE RETURN (UNION TO ELBOW STA 62)		1
-21	3H3-4-0140	.HOSE ASSY - PLASTIC COVERED (NAA)		1
-22	AN837-4D	.ELBOW -		1
	AN960D716	.WASHER -		1
	AN924-4D	.NUT -		1
	AN931-4S7	.GROMMET -		1
-23	191-58803-27	.LINE ASSY - UTILITY SYS PRESS. (UNION STA 51 TO ELBOW STA 63)		1
-24	AN815-4D	.UNION -		1
-25	191-58803-49	.LINE ASSY - UTILITY SYS PRESSURE (ELBOW STA 53 TO UNION STA 49)		1

FIGURE AND INDEX NUMBER	GROUP HYDRAULIC EQUIPMENT MAJOR ASSEMBLY FUSELAGE STA 53-135 PORT SIDE HYDRAULIC EQUIPMENT PART NUMBER	1234567 NOMENCLATURE	CODE	UNITS PER ASSY
190 -	AN742D4	•CLAMP -		2
	AN520-10R8	•SCREW -		2
	AN365-1032	•NUT -		2
-26	172-58818-55	•LINE ASSY - PORT BRAKE PRESS• (COMPENSATOR TO ELBOW STA 63)		1
-27	170-58804-53	•LINE ASSY - STBD BRAKE PRESS• (COMPENSATOR TO ELBOW STA 63)		1
-28	AN833-4D	•ELBOW -		2
	AN960D716	•WASHER -		2
	AN924-4D	•NUT -		2
-29	172-58807-77	•LINE ASSY - PORT BRAKE PRESSURE (ELBOW STA 63 TO UNION STA 72)		1
-30	172-58807-75	•LINE ASSY - STBD BRAKE PRESSURE (ELBOW STA 63 TO UNION STA 72)		1
-31	AN832-4D	•UNION -		2
	AN960D716	•WASHER -		2
	AN924-4D	•NUT -		2
-32	170-58804-67	•LINE ASSY - PORT BRAKE PRESSURE (UNION STA 71 TO ELBOW STA 84)		1
-33	170-58804-57	•LINE ASSY - STBD BRAKE PRESSURE (UNION STA 72 TO ELBOW STA 84)		1
-34	AN833-4D	•ELBOW -		2
	AN960D716	•WASHER -		2
	AN924-4D	•NUT -		2
-35	170-58804-69	•LINE ASSY - PORT BRAKE PRESSURE (ELBOW STA 84 TO UNION STA 118)		1
-36	170-58804-59	•LINE ASSY - STBD BRAKE PRESSURE (ELBOW STA 85 TO UNION STA 119)		1
-37	AN832-4D	•UNION -		2
	AN960D716	•WASHER -		2
	AN924-4D	•NUT -		2
-38	170-58804-963	•LINE ASSY - PORT BRAKE PRESSURE (UNION STA 118 TO ELBOW STA 127)		1
-39	170-58804-961	•LINE ASSY - STBD BRAKE PRESSURE (UNION STA 118 TO ELBOW STA 126)		1
-40	AN833-4D	•ELBOW -		2
	AN960D716	•WASHER -		2
	AN924-4D	•NUT -		2
-41	AN742D4	•CLAMP -		4
	AN520-10R8	•SCREW -		2
	AN365-1032	•NUT -		2
-42	AN742D4	•CLAMP -		1
	AN3-6A	•BOLT -		1
	NAS43DD-3-28	•SPACER -		1
	AN365-1032	•NUT -		1
-43	151-58561	•HANDLE ASSY - HYDRAULIC EMY SPEEDBRAKE DUMP VALVE	001-030	1
	151-58380	•SHAFT - HYDRAULIC EMY SPEEDBRAKE DUMP VALVE CONTROL	001-030	1
-44	151-58381	•ARM - HYDRAULIC EMERGENCY SPEEDBRAKE DUMP VALVE CONTROL	001-030	1
-45	NAS123R125	•KNOB -	001-030	1
	AN509-10R8	•SCREW -	001-030	1
	AN960D10L	•WASHER -	001-030	1
	AN960D10	•WASHER -	001-030	1
	AN960D516	•WASHER -	001-030	2
	AN960-616L	•WASHER -	001-030	2
	AN364-524	•NUT -	001-030	2
	AN6227B6	•PACKING -	001-030	1
-46	151-58562	•NAME-PLATE ASSY - HYDRAULIC EMERGENCY SPEEDBRAKE DUMP VALVE	001-030	1

FIGURE AND INDEX NUMBER	GROUP HYDRAULIC EQUIPMENT MAJOR ASSEMBLY FUSELAGE STA 53-135 PORT SIDE HYDRAULIC EQUIPMENT PART NUMBER	1234567 NOMENCLATURE	CODE	UNITS PER ASSY
190 -	151-58562-11	•NAME-PLATE ASSY - HYDRAULIC EMERGENCY SPEEDBRAKE DUMP VALVE (SERVICE EFF 23031-23164)	165-370	1
	151-58562-811	•NAME-PLATE ASSY - HYDRAULIC EMERGENCY SPEEDBRAKE DUMP VALVE	371-	1
	AN520-10R12	•SCREW -	001-030	2
	170-58243-3	•WASHER - HYDRAULIC PRESSURE SEAL	001-030	1
	170-58243-5	•WASHER - HYDRAULIC PRESSURE SEAL	001-030	1
	170-58243-7	•WASHER - HYDRAULIC PRESSURE SEAL	001-030	1
	170-58243-9	•WASHER - HYDRAULIC PRESSURE SEAL	001-030	1
	151-58373	•ROD ASSY - HYDRAULIC EMY SPEEDBRAKE DUMP VALVE FORWARD	001-030	1
-47	151-58373-3	••ROD - SPEEDBRAKE DUMP VALVE FORWARD	001-030	1
	151-58375-5	••ROD-END - SPEEDBRAKE DUMP VALVE	001-030	1
	F3I-14	••ROD-END - UNIBAL SPHERICAL BEARING (HEC)	001-030	1
-48	AN155-80L	•BARREL -	001-030	1
	151-58374	•ROD ASSY - HYDRAULIC EMY SPEEDBRAKE DUMP VALVE REAR	001-030	1
-49	151-58374-3	••ROD - SPEEDBRAKE DUMP VALVE REAR	001-030	1
	151-58375-3	••ROD-END - SPEEDBRAKE DUMP VALVE REAR	001-030	1
	F3I-14	••ROD-END - UNIBAL SPHERICAL BEARING (HEC)	001-030	1
-50	AN3-7A	•BOLT - (ROD TO ARM ATTACHING)	001-030	2
	AN365-1032	•NUT -	001-030	2
-51	151-58385	BRACKET ASSY - HYDRAULIC EMY SPEEDBRAKE DUMP VALVE CONTROL (SEE FIG. 194)		REF
-52	CROSS REFERENCE	LINE ASSY - (SEE FIG. 200)		REF
-53	161-58106-1	BRACKET ASSY - HYDRAULIC MASTER BRAKE CYL (SEE SECTION 3)		REF
		(CONTINUED SEE FIG. 191)		

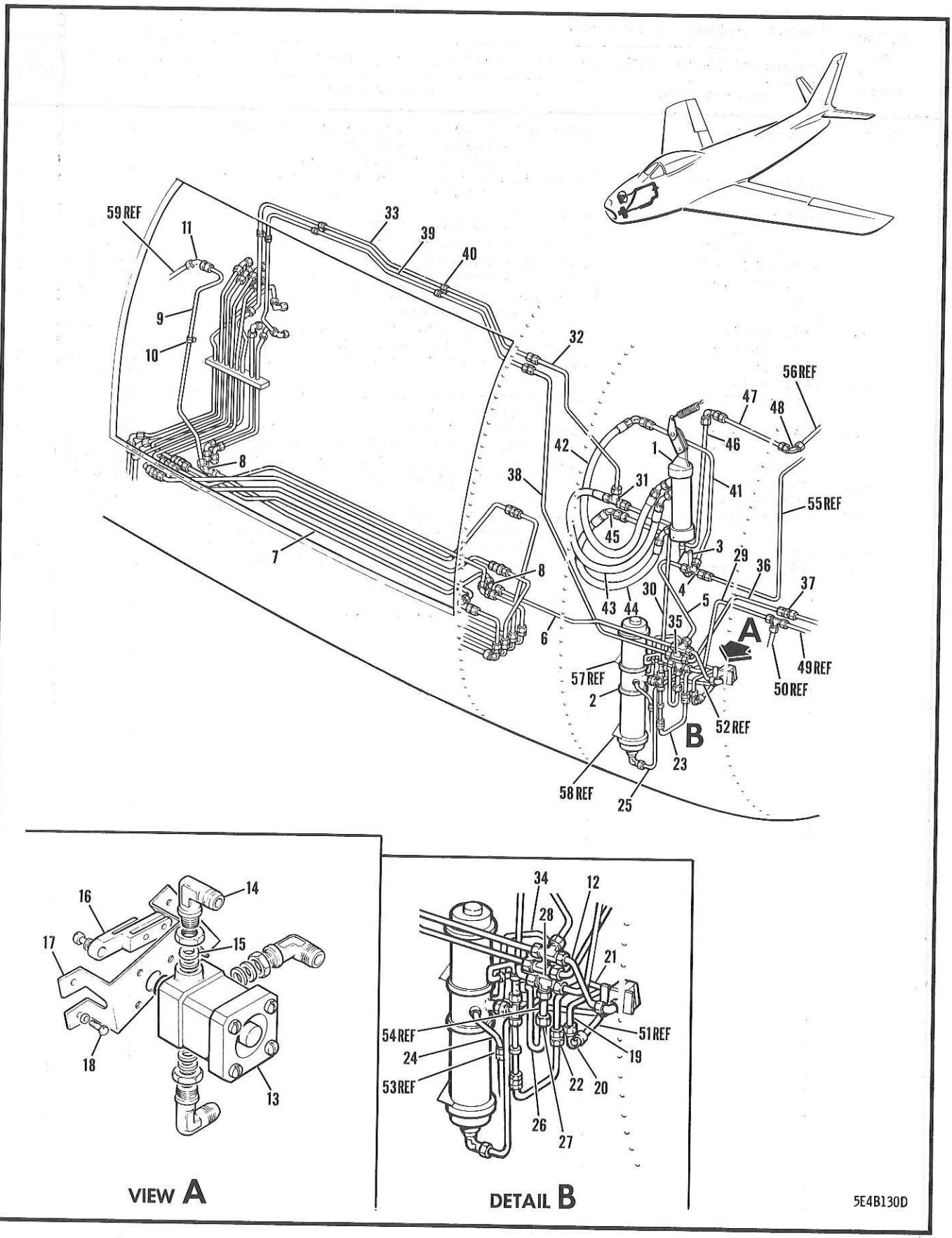

FIGURE 191 FUSELAGE STA 53-135 STARBOARD SIDE HYDRAULIC EQUIPMENT

FIGURE AND INDEX NUMBER	GROUP HYDRAULIC EQUIPMENT MAJOR ASSEMBLY FUSELAGE STA 53-135 STARBOARD SIDE HYDRAULIC PART NUMBER	1234567 NOMENCLATURE	CODE	UNITS PER ASSY
191 -	172-58059	HYDRAULIC EQUIP. INSTL - FUS STA 53 TO 135 (SEE FIG. 190)		REF
- 1	172-58650-10	.CYLINDER ASSY - HYDRAULIC MASTER BRAKE (COMPLETE) (SEE FIG. 220)		REF
- 2	172-58640-5	.ACCUMULATOR ASSY - HYDRAULIC EMY NOSE GEAR EXTENSION (COMPLETE) (SEE FIG. 213)		REF
	172-58105	.SPACER - HYDRAULIC EMY NOSE GEAR ACCUM FUS STA 72 UP. BRACKET		1
	325-625-380-S	.CLAMP - T-BOLT STAINLESS STEEL (MPC)	001-300	1
	325-63-380-SH	.CLAMP - T-BOLT STAINLESS STEEL (MPC)	301-	1
	325-625-463-S	.CLAMP - T-BOLT STAINLESS STEEL (MPC)	001-300	1
	325-63-463-SH	.CLAMP - T-BOLT STAINLESS STEEL (MPC)	301-	1
	AN3-11A	.BOLT -		2
- 3	AN4-11A	.BOLT -		1
	AN960-10	.WASHER -		1
	AN365-428	.NUT -		1
- 4	AN804D6	.TEE -		1
	AN960D916	.WASHER -		1
	AN924-6D	.NUT -		1
- 5	172-58807-15	.LINE ASSY - BRAKE RET (TEE TO TEE STA 63)		1
	AN804-6	.TEE -	001-370	1
	AN804D6	.TEE -	371-	1
	AN960D916	.WASHER -		1
	AN924-6D	.NUT -		1
- 6	172-58807-29	.LINE ASSY - EMERGENCY NOSE GEAR & BRAKE RETURN (TEE STA 62 TO ELBOW STA 84)		1
- 7	172-58807-31	.LINE ASSY - EMERGENCY NOSE GEAR & BRAKE RETURN (ELL. STA 84 TO ELL. STA 118)		1
- 8	AN837-6D	.ELBOW -		2
	AN960D916	.WASHER -		2
	AN924-4D	.NUT -		2
- 9	172-58807-33	.LINE ASSY - EMERGENCY NOSE GEAR & BRAKE RETURN(ELL. STA 118 TO ELL. STA 127)		1
-10	AN742D8C	.CLAMP -		1
	AN742D20C	.CLAMP -		1
	AN520-10R8	.SCREW -		1
	AN365-1032	.NUT -		1
-11	AN837-6D	.ELBOW -		1
	2W1V37-26-62	.WASHER - PLAIN (NAA)		1
	AN960D916	.WASHER -		1
	AN924-6D	.NUT -		1
-12	191-58803-53	.LINE ASSY - EMERGENCY NOSE GEAR RETURN (EMERGENCY SELECTOR VALVE TO TEE)		1
	172-58605-10	.VALVE ASSY - HYDRAULIC EMY NOSE GEAR SELECTOR (COMPLETE)	A11	1
	172-58605-810	.VALVE ASSY - HYDRAULIC EMY NOSE GEAR SELECTOR (COMPLETE)	371-399	1
-13	27300	..VALVE ASSY - MANUAL CONTROL HYD (HRM)	001-490	1
	37300	..VALVE ASSY - MANUAL CONTROL HYD (HRM)	491-	1
		OR		
	22318	..VALVE ASSY - (SVL)		
-14	AN833-6D	..ELBOW -	A11	3
	AN833-6	..ELBOW -	371-399	3
	AN6290-6	..GASKET -		3
-15	AN6291-6	..RING -		3
	AN6289-6	..NUT -		3
-16	172-58108	..BELL-CRANK - HYDRAULIC EMERGENCY NOSE GEAR SELECTOR VALVE)		1
	AN501A10-5	..SCREW -		1
	AN960D10	..WASHER -		1

FIGURE AND INDEX NUMBER	GROUP HYDRAULIC EQUIPMENT MAJOR ASSEMBLY FUSELAGE STA 53-135 STARBOARD SIDE HYDRAULIC PART NUMBER	1234567 NOMENCLATURE	CODE	UNITS PER ASSY
191 -17	172-58107	••BRACKET - HYDRAULIC EMERGENCY NOSE GEAR SELECTOR VALVE SUPPORT	A11	1
	172-58107-800	••BRACKET - HYDRAULIC EMERGENCY NOSE GEAR SELECTOR VALVE SUPPORT	371-399	1
	AN501A10-5	••SCREW -		3
	AN960D10L	••WASHER -		3
-18	AN3-6A	•BOLT -		5
	AN960D10	•WASHER -		5
-19	191-58803-51	•LINE ASSY - EMERGENCY NOSE GEAR DOWN (EMERGENCY SEL VALVE TO ELBOW BL 13)		1
	AN919-6D	•REDUCER -		1
	AN6290-4	•GASKET -		1
-20	AN927-4	•ELBOW -		1
	AN6290-4	•GASKET -		1
	AN832-4D	•UNION -		1
	AN960D716	•WASHER -		1
	AN924-4D	•NUT -		1
-21	191-58803-55	•LINE ASSY - EMERGENCY NOSE GEAR PRESS• (TEE BL 13 TO EMERGENCY SEL VALVE)		1
-22	AN926-4	•TEE -		1
	AN6290-4	•GASKET -		1
	AN832-4D	•UNION -		1
	AN960D716	•WASHER -		1
	AN924-4D	•NUT -		1
	AN6290-4	•GASKET -		1
	AN919-6D	•REDUCER -		1
	AN815-4	•UNION -		1
	AN6290-4	•GASKET -		1
-23	191-58803-17	•LINE ASSY - UTILITY SYS PRESS• (EMERGENCY NOSE GEAR ACCUMULATOR TO TEE BL 13)		1
-24	191-58803-21	•LINE ASSY - EMERGENCY NOSE GR DUMP RETURN (ELBOW TO EMERGENCY NOSE GEAR ACCUM)		1
	AN837-4D	•ELBOW -		1
	AN960D716	•WASHER -		1
	AN924-4D	•NUT -		1
-25	191-58803-19	•LINE ASSY - EMERGENCY NOSE GEAR AIR PRESS• (UNION TO EMERGENCY NOSE GEAR ACCUM)		1
-26	191-58803-15	•LINE ASSY - UTILITY SYS PRESSURE CV TO EMERGENCY NOSE GEAR ACCUM)		1
-27	AN6249-4	•VALVE - 3000-PSI HYDRAULIC CHECK		1
	AN6290-4	•GASKET -		1
	NAS424-4	•COUPLING -		1
	AN6290-4	•GASKET -		1
	AN6249-4	•VALVE - 3000-PSI HYDRAULIC CHECK		1
-28	AN783-4	•TEE -		1
	AN960D716	•WASHER -		1
	AN924-4D	•NUT -		1
	AN6290-4	•GASKET -		1
-29	191-58803-13	•LINE ASSY - UTILITY SYS PRESSURE (TEE STA 63 TO TEE STA 53)		1
-30	191-58803-3	•LINE ASSY - UTILITY SYS PRESSURE (TEE STA 71 TO TEE STA 63)		1
-31	AN804D4	•TEE -		1
	AN960D716	•WASHER -		1
	AN924-4D	•NUT -		1
-32	191-58803-23	•LINE ASSY - UTILITY SYS PRESSURE (ELBOW STA 84 TO TEE STA 77)		1
	AN837-4D	•ELBOW -		1
	AN960D716	•WASHER -		1
	AN924-4D	•NUT -		1

FIGURE AND INDEX NUMBER	GROUP HYDRAULIC EQUIPMENT MAJOR ASSEMBLY FUSELAGE STA 53-135 STARBOARD SIDE HYDRAULIC PART NUMBER	1234567 NOMENCLATURE	CODE	UNITS PER ASSY
191 -33	191-58803-25	•LINE ASSY - UTILITY SYS PRESSURE (TEE STA 123 TO ELBOW STA 63)		1
-34	172-58807-21	•LINE ASSY - UTILITY SYS RETURN (EMERGENCY NOSE GEAR ACCUMULATOR TO TEE)		1
-35	AN804D4	•TEE -		1
	AN960D716	•WASHER -		1
	AN924-4D	•NUT -		1
-36	172-58807-3	•LINE ASSY - UTILITY SYS RETURN (UNION STA 53 TO TEE STA 63)		1
-37	AN832-4D	•UNION -		1
	AN960D716	•WASHER -		1
	AN924-4D	•NUT -		1
-38	172-58807-23	•LINE ASSY - UTILITY SYS RETURN (TEE STA 63 TO ELBOW STA 84)		1
	AN837-4D	•ELBOW -		1
	AN960D716	•WASHER -		1
	AN924-4D	•NUT -		1
-39	172-58807-39	•LINE ASSY - UTILITY SYS RETURN (ELBOW STA 84 TO ELBOW STA 120)		1
-40	AN742D4	•CLAMP -		6
	AN520-10R8	•SCREW -		4
	AN365-1032	•NUT -		4
-41	172-58807-79	•LINE ASSY - STBD BRAKE RETURN (UNION STA 72 TO TEE STA 63)		1
	AN832-6D	•UNION -		1
	AN960D916	•WASHER -		1
	AN924-6D	•NUT -		1
	AN6290-6	•GASKET -		1
	AN928-6D	•ELBOW -		1
	AN919-6D	•REDUCER -		1
-42	3H3-4-0280	•HOSE ASSY - PLASTIC COVERED (NAA)		1
-43	3H3-4-0234	•HOSE ASSY - PLASTIC COVERED (NAA)		1
-44	3H3-4-0150	•HOSE ASSY - PLASTIC COVERED (NAA)		1
-45	AN837-4D	•ELBOW -		1
	AN960D716	•WASHER -		1
	AN924-4D	•NUT -		1
-46	170-58805-31	•LINE ASSY - STBD BRAKE PRESSURE (ELBOW STA 72 TO ELBOW STA 63)		1
	AN833-4D	•ELBOW -		1
	AN960D716	•WASHER -		1
	AN924-4D	•NUT -		1
-47	170-58805-951	•LINE ASSY - STBD BRAKE PRESSURE (ELBOW STA 63 TO ELBOW STA 53)		1
-48	AN833-4D	•ELBOW -		1
	AN960D716	•WASHER -		1
	AN924-4D	•NUT -		1
-49	191-58803-49	LINE ASSY - UTILITY SYSTEM PRESSURE (SEE FIG. 190)		REF
-50	CROSS REFERENCE	LINE ASSY - (SEE FIG. 189)		REF
-51	170-58803-79	LINE ASSY - EMERGENCY NOSE GEAR DOWN (SEE FIG. 188)		REF
-52	172-58805-9	LINE ASSY - EMERGENCY NOSE GEAR PRESSURE (SEE FIG. 188)		REF
-53	191-58801-21	LINE ASSY - EMERGENCY NOSE GEAR DUMP RETURN (SEE FIG. 188)		REF
-54	172-58805-5	LINE ASSY - EMERGENCY NOSE GEAR ACCUM AIR-PRESSURE (SEE FIG. 188)		REF
-55	170-58804-31	LINE ASSY - BRAKE RETURN (SEE FIG. 190)		REF
-56	170-58804-951	LINE ASSY - BRAKE PRESS. (SEE FIG. 190)		REF
-57	172-58104	BRACKET - HYDRAULIC EMY NOSE GEAR ACCUM FUS STA 72 UPPER (SEE SECTION 3)		REF

FIGURE AND INDEX NUMBER	GROUP HYDRAULIC EQUIPMENT MAJOR ASSEMBLY FUSELAGE STA 53-135 STARBOARD SIDE HYDRAULIC PART NUMBER	1234567 NOMENCLATURE	CODE	UNITS PER ASSY
191 -58	172-58103	BRACKET - HYDRAULIC EMY NOSE GEAR ACCUM FUS STA 72 LOWER (SEE SECTION 3)		REF
-59	13A-71826-9	LINE ASSY - BRAKE RETURN (SEE FIG. 193)		REF
		(CONTINUED SEE FIG. 192)		

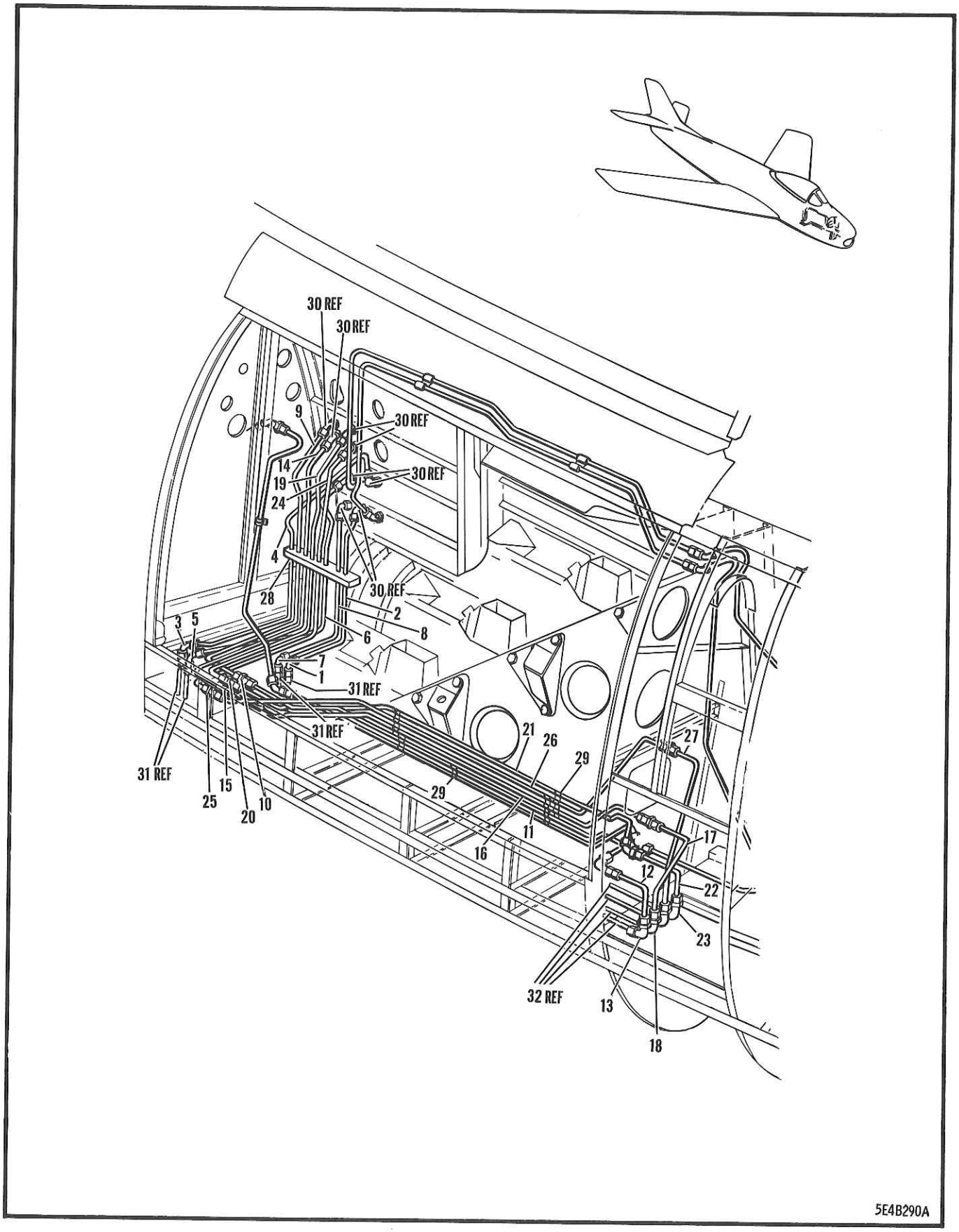

FIGURE 192 NOSE GEAR & FAIRING DOOR HYDRAULIC EQUIPMENT

FIGURE AND INDEX NUMBER	GROUP HYDRAULIC EQUIPMENT MAJOR ASSEMBLY NOSE GEAR & FAIRING DOOR HYDRAULIC EQUIPMENT PART NUMBER	1234567 NOMENCLATURE	CODE	UNITS PER ASSY
192 -	172-58059	HYDRAULIC EQUIP. INSTL - FUS STA 53 TO 135 (SEE FIG. 190)		REF
- 1	AN837-6D	•ELBOW -	001-370	1
	AN837-6	•ELBOW -	371-	1
	AN960D916	•WASHER -		1
	AN924-6D	•NUT -		1
- 2	191-58803-57	•LINE ASSY - SURFACE CTL PRESSURE (ELBOW STA 123 TO ELBOW STA 121)	001-370	1
	191-58803-1057	•LINE ASSY - SURFACE CTL PRESSURE (ELBOW STA 123 TO ELBOW STA 121) (AS PER EO 05-5E-6B/13)	371-	1
- 3	AN833-4D	•ELBOW -		1
	AN960D716	•WASHER -		1
	AN924-4D	•NUT -		1
- 4	191-58803-41	•LINE ASSY - UTILITY SYSTEM PRESSURE (TEE STA 123 TO ELBOW STA 128)		1
- 5	AN837-6D	•ELBOW -	001-370	1
	AN837-6	•ELBOW - (AS PER EO 05-5E-6B/13)	371-	1
	AN960D916	•WASHER -		1
	AN924-6D	•NUT -		1
- 6	172-58807-61	•LINE ASSY - POWER CTL RETURN (ELBOW STA 126 TO ELBOW STA 121)	001-370	1
	172-58807-1061	•LINE ASSY - POWER CTL RETURN (ELBOW STA 126 TO ELBOW STA 121) (AS PER EO 05-5E-6B/13)	371-	1
- 7	AN837-8D	•ELBOW -		1
	AN960D1216	•WASHER -		1
	AN924-8D	•NUT -		1
- 8	191-58803-59	•LINE ASSY - SURFACE CTL PRESSURE (ELBOW STA 121 TO ELBOW STA 123)		1
- 9	191-58803-33	•LINE ASSY - NOSE GEAR DOWN (ELBOW STA 123 TO UNION STA 118)		1
-10	AN832-4D	•UNION -		1
	AN960D716	•WASHER -		1
	AN924-4D	•NUT -		1
-11	191-58803-47	•LINE ASSY - NOSE GEAR DOWN (UNION STA 118 TO ELBOW STA 84)		1
	AN833-4D	•ELBOW -		1
	AN960D716	•WASHER -		1
	AN924-4D	•NUT -		1
-12	191-58803-5	•LINE ASSY - NOSE GEAR DOWN (ELBOW STA 84 TO ELBOW STA 81)		1
-13	AN833-4D	•ELBOW -		1
	AN960D716	•WASHER -		1
	AN924-4D	•NUT -		1
-14	191-58803-35	•LINE ASSY - FAIRING DOOR CLOSE (ELBOW STA 122 TO UNION STA 118)		1
-15	AN832-4D	•UNION -		1
	AN960D716	•WASHER -		1
	AN924-4D	•NUT -		1
-16	191-58803-29	•LINE ASSY - FAIRING DOOR CLOSE (UNION STA 118 TO ELBOW STA 84)		1
	AN832-4D	•UNION -		1
	AN960D716	•WASHER -		1
	AN924-4D	•NUT -		1
-17	191-58803-31	•LINE ASSY - FAIRING DOOR CLOSE (UNION STA 84 TO ELBOW STA 81)		1
-18	AN833-4D	•ELBOW -		1
	AN960D716	•WASHER -		1
	AN924-4D	•NUT -		1

FIGURE AND INDEX NUMBER	GROUP HYDRAULIC EQUIPMENT MAJOR ASSEMBLY NOSE GEAR & FAIRING DOOR HYDRAULIC EQUIPMENT PART NUMBER	1234567 NOMENCLATURE	CODE	UNITS PER ASSY
192 -19	191-58803-37	•LINE ASSY - FAIRING DOOR OPEN (ELBOW STA 121 TO UNION STA 118)		1
-20	AN832-4D	•UNION -		1
	AN960D716	•WASHER -		1
	AN924-4D	•NUT -		1
-21	191-58803-45	•LINE ASSY - FAIRING DOOR OPEN (UNION STA 118 TO ELBOW STA 84)		1
	AN833-4D	•ELBOW -		1
	AN960D716	•WASHER -		1
	AN924-4D	•NUT -		1
-22	191-58803-7	•LINE ASSY - FAIRING DOOR OPEN (ELBOW STA 84 TO ELBOW STA 80)		1
-23	AN833-4D	•ELBOW -		1
	AN960D716	•WASHER -		1
	AN924-4D	•NUT -		1
-24	191-58803-39	•LINE ASSY - NOSE GEAR UP (ELBOW STA 120 TO UNION STA 118)		1
-25	AN832-4D	•UNION -		1
	AN960D716	•WASHER -		1
	AN924-4D	•NUT -		1
-26	191-58803-43	•LINE ASSY - NOSE GEAR UP (UNION STA 118 TO ELBOW STA 84)		1
	AN832-4D	•UNION -		1
	AN960D716	•WASHER -		1
	AN924-4D	•NUT -		1
-27	191-58803-9	•LINE ASSY - NOSE GEAR UP (UNION STA 84 TO ELBOW STA 80)		1
	AN833-4D	•ELBOW -		1
	AN960D716	•WASHER -		1
	AN924-4D	•NUT -		1
-28	170-58156	•BLOCK ASSY - HYDRAULIC LINE SUPPORT (FUS STA 121)		1
	170-58156-3	••BLOCK - HYDRAULIC LINE SUPPORT (STA 121)		1
	170-58156-5	••BLOCK - HYDRAULIC LINE SUPPORT (STA 121)		1
	170-58156-7	••BLOCK - HYDRAULIC LINE SUPPORT (STA 121)		1
	AN3-15A	•BOLT -		1
	AN3-16A	•BOLT -		1
-29	AN742D4	•CLAMP -		14
	AN742D6	•CLAMP -		2
	AN520-10R8	•SCREW -		7
	AN3-13A	•BOLT -		1
	NAS43DD-3-24	•SPACER -		1
	AN365-1032	•NUT -		8
-30	CROSS REFERENCE	LINE ASSY - (SEE FIG. 193)		REF
-31	CROSS REFERENCE	LINE ASSY - (SEE FIG. 200)		REF
-32	CROSS REFERENCE	LINE ASSY - (SEE FIG. 188)		REF
		(CONTINUED SEE FIG. 217)		

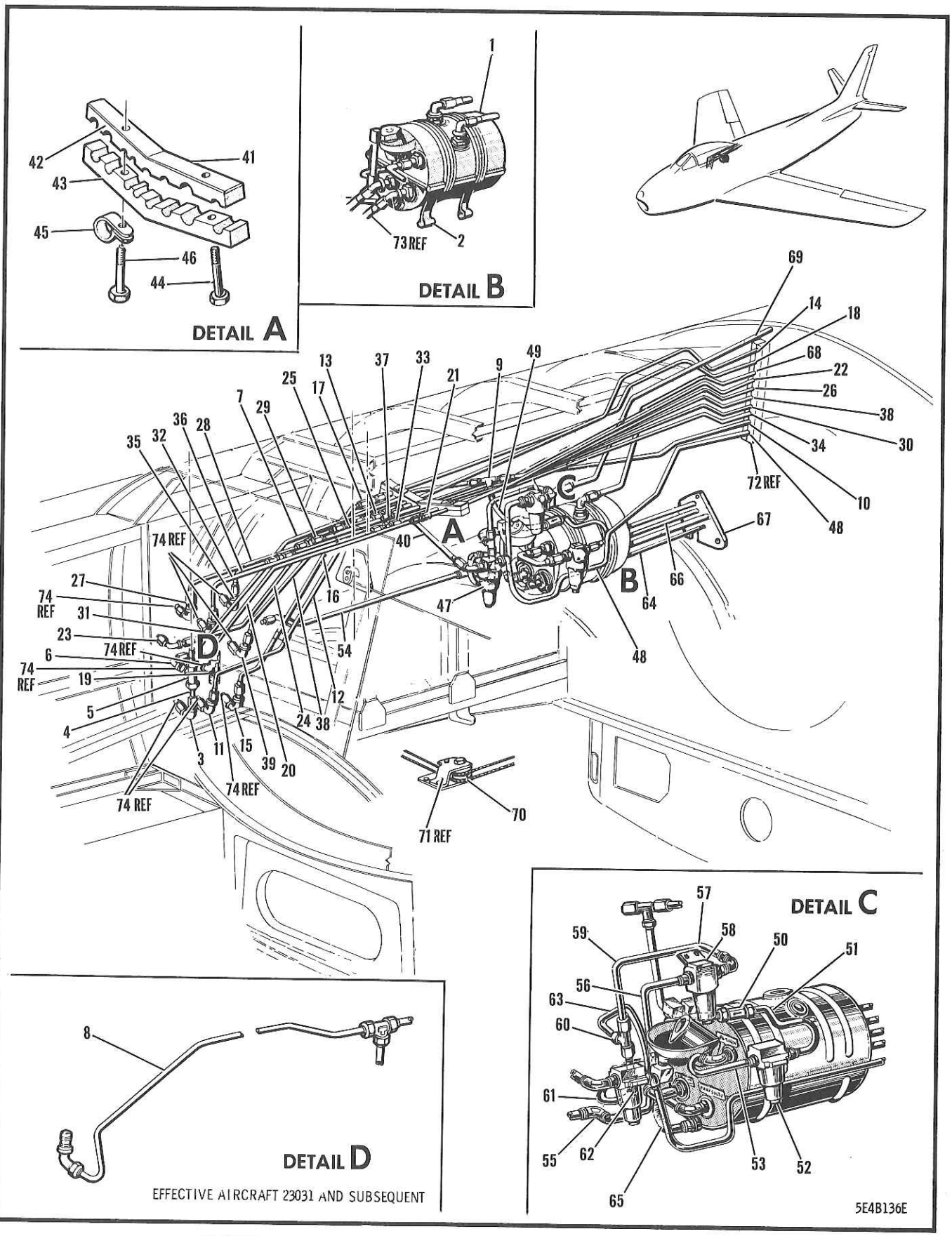

FIGURE 193 FUSELAGE STA 133-178 HYDRAULIC EQUIPMENT

FIGURE AND INDEX NUMBER	GROUP HYDRAULIC EQUIPMENT MAJOR ASSEMBLY FUSELAGE STA 133-178 HYDRAULIC EQUIPMENT PART NUMBER	1234567 NOMENCLATURE	CODE	UNITS PER ASSY
193 -	170-58060C	HYDRAULIC EQUIP. INSTL - FUS STA 133-178 (SEE SECTION 3)		NP
- 1	170-58651-7	•RESERVOIR ASSY - UT SYSTEM (SEE FIG. 221)		REF
- 2	41759-10-11	•STRAP ASSY - CODED LOOP ENDS PADDED (MPC)	001-300	2
	41759-10-11SH	•STRAP ASSY - CODED LOOP ENDS PADDED (MPC)	301-	2
	41759-12-11	•STRAP ASSY - CODED LOOP ENDS PADDED (MPC)		2
	AN393-35	•PIN -		4
	AN960D10L	•WASHER -		4
	AN380-2-2	•PIN -		4
	AN515-8R7	•SCREW -		2
	AN365-832	•NUT -		2
- 3	AN833-4	•ELBOW -		1
	AN960D716	•WASHER -		1
	2W1V28-24-62	•WASHER - PLAIN (NAA)		1
	AN924-4D	•NUT -		1
- 4	172-58818-25	•LINE ASSY - UTILITY RETURN (ELBOW STA 120 TO TEE STA 123)	001-030	1
	AN919-10D	•REDUCER -	001-030	1
	AN6290-8	•GASKET -	001-030	1
- 5	AN926-8D	•TEE -	001-030	1
	AN6290-8	•GASKET -	001-030	1
- 6	AN837-8D	•ELBOW -	001-030	1
- 7	172-58818-27	•LINE ASSY - UTILITY RETURN (TEE STA 130 TO TEE STA 160)	001-030	1
- 8	13A-71826-21	•LINE ASSY - UTILITY RETURN (ELBOW STA 120 TO TEE STA 160)	A39	1
	13A-71826-23	•LINE ASSY - UTILITY RETURN (ELBOW STA 120 TO TEE STA 160)	A40	1
- 9	AN824-8D	•TEE -	001-030	1
	AN926-6D	•TEE -	A39	1
	AN804D8	•TEE -	A40	1
	AN919-6D	•REDUCER -	A39	1
	AN894D8-4	•BUSHING -	A40	1
	AN6290-6	•GASKET -	A39	1
	AN6290-8	•GASKET -	A40	1
	AN6291-8	•RING -	A40	1
	AN6289D8	•NUT -	A40	1
	AN919-12D	•REDUCER -	A39	2
	AN6290-6	•GASKET -	A39	2
-10	172-58818-13	•LINE ASSY - UTILITY RETURN (TEE STA 160 TO ELBOW STA 183)		1
-11	AN837-6	•ELBOW -		1
	AN960D916	•WASHER -		1
	2W1V36-28-62	•WASHER - PLAIN (NAA)		1
	AN924-6D	•NUT -		1
-12	172-58818-11	•LINE ASSY - POWER CTL RETURN (ELL. STA 121 TO UNION STA 147)	001-370	1
	172-58818-1011	•LINE ASSY - POWER CTL RETURN (ELL. STA 121 TO UNION STA 147) (AS PER EO 05-5E-6B/13)	371-	1
-13	AN815-6D	•UNION -	001-370	1
	AN815-6	•UNION - (AS PER EO 05-5E-6B/13)	371-	1
-14	13A-71827-3	•LINE ASSY - NORMAL SURFACE CONTROL RETURN (UNION STA 147 TO UNION STA 185)	001-370	1
	13A-71827-1003	•LINE ASSY - NORMAL SURFACE CONTROL RETURN (UNION STA 147 TO UNION STA 185) (AS PER EO 05-5E-6B/13)	371-	1
-15	AN837-6D	•ELBOW -		1
	AN960D916	•WASHER -		1
	2W1V36-28-62	•WASHER - PLAIN (NAA)		1

FIGURE AND INDEX NUMBER	GROUP HYDRAULIC EQUIPMENT MAJOR ASSEMBLY FUSELAGE STA 133-178 HYDRAULIC EQUIPMENT PART NUMBER	1234567 NOMENCLATURE	CODE	UNITS PER ASSY
193 -	AN924-6D	•NUT -		1
-16	191-58805-23	•LINE ASSY - SURFACE CONTROL PRESSURE (ELBOW STA 123 TO UNION STA 144)	001-370	1
	191-58805-1023	•LINE ASSY - SURFACE CONTROL PRESSURE (ELBOW STA 123 TO UNION STA 144) (AS PER EO 05-5E-6B/13)	371-	1
-17	AN815-6D	•UNION -	001-370	1
	AN815-6	•UNION - (AS PER EO 05-5E-6B/13)	371-	1
-18	191-58805-25	•LINE ASSY - SURFACE CONTROL PRESSURE (UNION STA 144 TO UNION STA 181)	001-370	1
	191-58805-1025	•LINE ASSY - SURFACE CONTROL PRESSURE (UNION STA 144 TO UNION STA 181) (AS PER EO 05-5E-6B/13)	371-	1
-19	AN804-4	•TEE -		1
	AN960D716	•WASHER -		1
	2W1V28-24-62	•WASHER - PLAIN (NAA)		1
	AN924-4D	•NUT -		1
-20	191-58805-13	•LINE ASSY - UTILITY PRESSURE (TEE STA 123 TO UNION STA 146)		1
-21	AN815-4D	•UNION -		1
-22	191-58805-11	•LINE ASSY - UTILITY PRESSURE (UNION STA 146 TO UNION STA 180)		1
-23	AN833-4	•ELBOW -		1
	AN960D716	•WASHER -		1
	2W1V28-24-62	•WASHER - PLAIN (NAA)		1
	AN924-4D	•NUT -		1
-24	191-58805-17	•LINE ASSY - NOSE GEAR UP (ELBOW STA 120 TO UNION STA 144)		1
-25	AN815-4D	•UNION -		1
-26	191-58805-5	•LINE ASSY - NOSE GEAR UP (UNION STA 144 TO UNION STA 182)		1
-27	AN833-4	•ELBOW -		1
	AN960D716	•WASHER -		1
	2W1V28-24-62	•WASHER - PLAIN (NAA)		1
	AN924-4D	•NUT -		1
-28	191-58805-19	•LINE ASSY - FAIRING DOOR OPEN (ELBOW STA 121 TO UNION STA 142)		1
-29	AN815-4D	•UNION -		1
-30	191-58805-9	•LINE ASSY - FAIR• DOOR OPEN (UNION STA 142 TO UNION STA 181)		1
-31	AN833-4D	•ELBOW -		1
	AN960D716	•WASHER -		1
	2W1V28-24-62	•WASHER - PLAIN (NAA)		1
	AN924-4D	•NUT -		1
-32	191-58805-21	•LINE ASSY - FAIRING DOOR CLOSE (ELBOW STA 123 TO UNION STA 144)		1
-33	AN815-4D	•UNION -		1
-34	191-58805-7	•LINE ASSY - FAIRING DOOR CLOSE (UNION STA 144 TO UNION STA 182)		1
-35	AN837-4D	•ELBOW -		1
	AN960D716	•WASHER -		1
	2W1V28-24-62	•WASHER - PLAIN (NAA)		1
	AN924-4D	•NUT -		1
-36	191-58805-15	•LINE ASSY - NOSE GEAR DOWN (ELBOW STA 123 TO UNION STA 146)		1
	AN742D4	•CLAMP -		7
	AN742D6	•CLAMP -		3
	AN520-10R8	•SCREW -		5
	AN365-1032	•NUT -		5
-37	AN815-4D	•UNION -		1

Figure and Index Number	Part	1 2 3 4 5 6 7 Nomenclature	Units per Assy	Usage on Code
	Group HYDRAULIC EQUIPMENT			
	Major Assembly FUSELAGE STA 133-178 HYDRAULIC EQUIPMENT			
193 -38	191-58805-3	Line Assy - Nose Gear Down (Union Sta 146 to Union Sta 181)		1
-39	AN833-8D	Elbow -		1
	AN960D1216	Washer -		1
	2W1V48-32-62	Washer - Plain (Fibre) (NAA)		1
	AN924-8D	Nut -		1
-40	172-58810-800	Line Assy - Power CTL Pressure (Union Sta 123 to Filter)	001-210	1
	13A-71827-5	Line Assy - Normal Sur Control Pressure (Union Sta 123 to Filter)	211-	1
-41	172-58112-9	Support Assy - Hyd Line Fus Sta 152 Block		1
-42	172-58112-5	Block - Hydraulic Line Fuselage Sta 152	001-030	1
-43	172-58112-7	Block - Hydraulic Line Fuselage Sta 152	001-030	1
	172-58112-800	Support Assy - Hyd Line Fus Sta 152 Block	031-370	1
	172-58112-801	Support Assy - Hyd Line Fus Sta 152 Block	371-	1
-44	AN3-13A	Bolt -		1
-45	AN742D10C	Clamp -		1
-46	AN3-16A	Bolt -		1
	172-58655-3	Filter Assy - Hyd Power CTL Pressure Sys		1
-47	MS28720-8	Filter - 3000-psi Hydraulic Line Type (Hydraulic Power Control)		1
	AN833-8D	Elbow -		2
	AN6291-8	Ring -		2
	AN6290-8	Gasket -		2
	AN6289D8	Nut -		2
	NAS43DD-4-40	Spacer -		2
	AN4-25A	Bolt -		1
-48	191-58805-29	Line Assy - Surface CTL Pressure (Filter to Elbow Sta 178)		1
-49	172-58818-29	Line Assy - Utility Return (Tee Sta 160 to Check Valve Sta 166)		1
-50	AN6207-8	Valve - 1500-psi Hydraulic Check		1
-51	172-58818-47	Line Assy - Utility Return (Check Valve to Filter)		1
	151-58673-3	Filter Assy - Hydraulic System Complete		1
-52	AN6234-3	Filter Assy - Hydraulic Replaceable Element Line Type (Purolator 30018 - Skinner 28090D)		1
	AN6235-3A	Element Assy (Purolator 6655567 - Skinner 28025D)		1
	AN6230-4	Packing - Bowl "O"-ring (Purolator 30323 - Skinner 28415)		1
	AN6244-4	Ring - Bowl Back Up (Skinner 565965)		1
	32152	Ring - Bowl Back Up (Purolator)		1
	AN6290-8	Gasket -		2
	AN815-8D	Union -		2
	NAS43DD-4-40	Spacer -		2
	AN4-25A	Bolt -		2
-53	172-58810-15	Line Assy - Utility Return (Filter to Reservoir)		1
-54	13A-71826-9	Line Assy - Brake Return (Elbow Sta 126 to Elbow Sta 155)		1

Figure and Index Number	Group HYDRAULIC EQUIPMENT Major Assembly FUSELAGE STA 133-178 HYDRAULIC EQUIPMENT Part	1 2 3 4 5 6 7 Nomenclature	Units per Assy	Usage on Code
193 -54	AN742D6	Clamp -		1
	AN520-10R8	Screw -		1
	AN365-1032	Nut -		1
-55	AN821-6D	Elbow -		1
-56	13A-71826-7	Line Assy - Brake Return (Elbow Sta 156 to Filter)		1
	AN742D6	Clamp -		1
	AN520-10R8	Screw -		1
	AN365-1032	Nut -		1
-57	172-58190	Support Assy - Hydraulic Brake Ret Filter		1
	AN3-4A	Bolt -		2
	172-58639-3	Filter Assy - Hydraulic Brake Return		1
-58	AN6234-2	Filter - Hydraulic Replaceable Element Line Type		1
	AN833-6D	Elbow -		1

FIGURE AND INDEX NUMBER	GROUP HYDRAULIC EQUIPMENT MAJOR ASSEMBLY FUSELAGE STA 133-178 HYDRAULIC EQUIPMENT PART NUMBER	1234567 NOMENCLATURE	CODE	UNITS PER ASSY
193 -	AN815-6D	••UNION -		1
	AN6290-6	••GASKET -		2
	AN6291-6	••RING -		1
	AN6289-6	••NUT -		1
	AN3-23A	•BOLT -	001-040	2
	AN4-23A	•BOLT -	041-	2
	NAS43DD-3-32	•SPACER -	001-040	2
	NAS43DD-4-32	•SPACER -	041-	2
	AN365-1032	•NUT -	001-040	2
	AN365-428	•NUT -	041-	2
-59	13A-71826-11	•LINE ASSY - BRAKE RETURN (FILTER TO TEE)		1
-60	AN824-6D	•TEE -		1
-61	13A-71826-3	•LINE ASSY - UTILITY PUMP CASE DRAIN (ELBOW TO TEE STA 160)		1
-62	AN821-6D	•ELBOW -		1
-63	13A-71826-13	•LINE ASSY - BRAKE RET & PUMP DRAIN (TEE TO UTILITY RESERVOIR)		1
-64	13A-71826-5	•LINE ASSY - UTILITY PUMP CASE DRAIN (ELBOW STA 156 TO UNION STA 182)		1
-65	13A-71826-15	•LINE ASSY - RESERVOIR DRAIN (RESERVOIR TO UNION STA 180)		1
-66	13A-71826-17	•LINE ASSY - RESERVOIR SCUPPER DRAIN (ELBOW TO REDUCER STA 180)		1
-67	170-58165	•SEAL - HYDRAULIC LINE SUPPORT & VAPOUR (STA 178)		1
	AN3-5A	•BOLT -		4
	AN960-10L	•WASHER -		4
-68	13A-71820-33	•LINE ASSY - UTILITY RESERVOIR AIR-PRESSURE (RESERVOIR TO UNION STA 190)		1
-69	13A-71820-35	•LINE ASSY - UTILITY RSRVR VENT (RESERVOIR TO UNION STA 182)		1
	AN931-6-16	•GROMMET -		1
-70	AN210-1A	•PULLEY -	001-100	2
	AN3-11A	•BOLT -	001-100	1
-71	151-58131	BRACKET - HYD FLAP VALVE•CABLE PULLEY (SEE SECTION 3)		REF
-72	13A-71208	SUPPORT ASSY - HYDRAULIC LINE (SEE FIG•197)		REF
-73	13A-71820-3	LINE ASSY - UTILITY SUCTION (SEE FIG• 196)		REF
-74	CROSS REFERENCE	LINE ASSY - (SEE FIG• 192)		REF
		(CONTINUED SEE FIG• 194)		

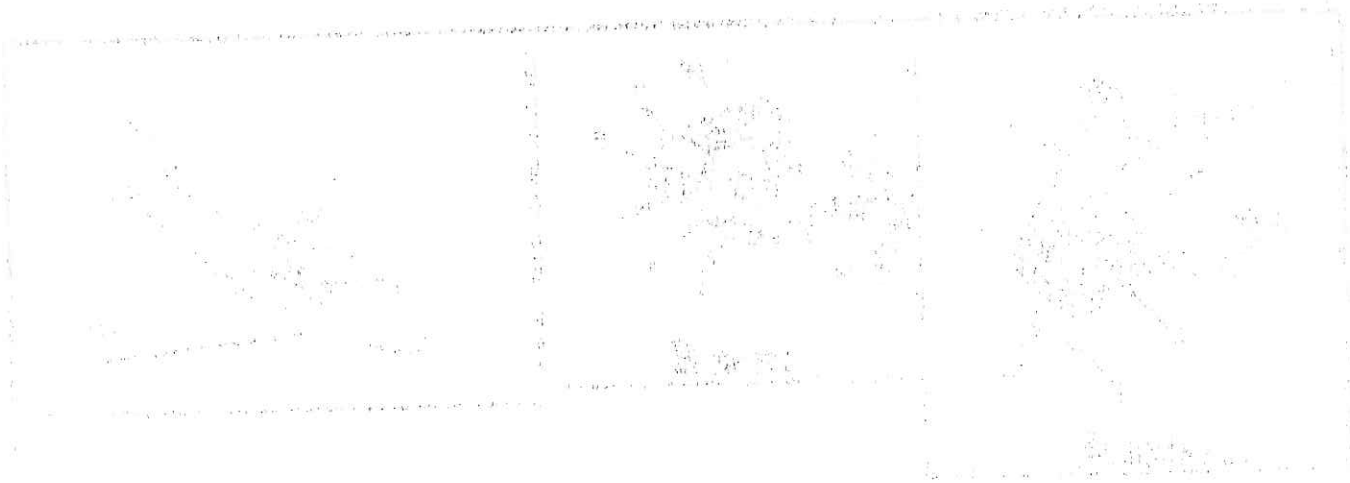

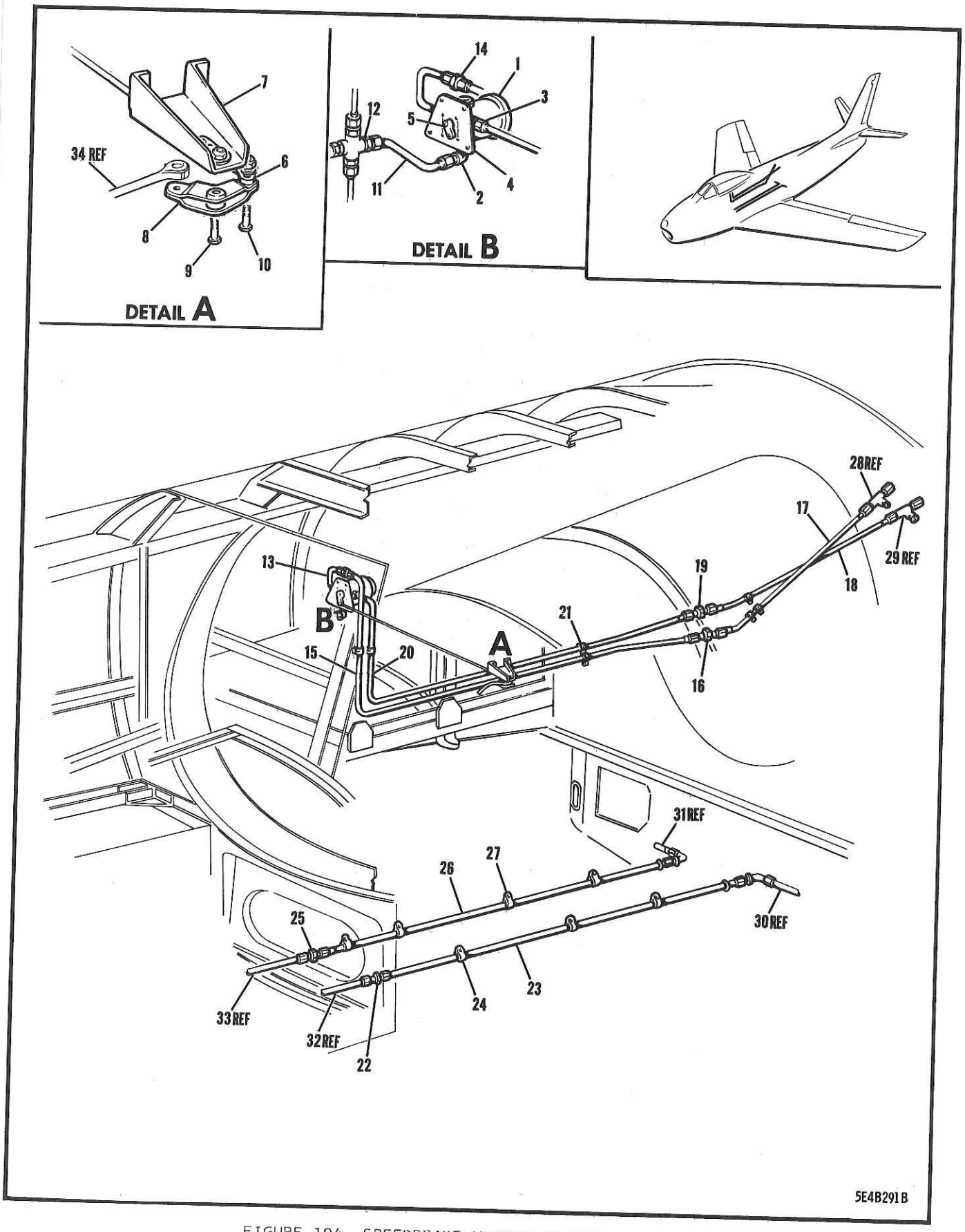

FIGURE 194 SPEEDBRAKE HYDRAULIC EQUIPMENT

FIGURE AND INDEX NUMBER	GROUP HYDRAULIC EQUIPMENT MAJOR ASSEMBLY SPEEDBRAKE HYDRAULIC EQUIPMENT PART NUMBER	1234567 NOMENCLATURE	CODE	UNITS PER ASSY
194 -	170-58060C	HYDRAULIC EQUIP. INSTL - FUS STA 133-178 (SEE FIG. 193)		REF
	172-58647	.VALVE ASSY - HYDRAULIC EMY SPEEDBRAKE DUMP (COMPLETE)	001-030	1
- 1	13476	..VALVE ASSY - EMERGENCY DUMP (SVL) (FOR BREAKDOWN SEE EO 15-70WC-4)	001-030	1
		OR		
	27400	..VALVE ASSY - HYDRAULIC BY-PASS (HRM) (SPEC NA5-8233-2)	001-030	
- 2	AN833-8D	..ELBOW -	001-030	1
	AN6290-8	..GASKET -	001-030	1
	AN6291-8	..GASKET -	001-030	1
	AN6289D8	..NUT -	001-030	1
- 3	AN815-8D	..UNION -	001-030	2
	AN6290-8	..GASKET -	001-030	2
- 4	151-58372	..PLATE - EMY SPEEDBRAKE DUMP VALVE MTG	001-030	1
	AN502-10-10	..SCREW -	001-030	4
- 5	151-58367	..ARM - HYD EMY SPEEDBRAKE DUMP VALVE	001-030	1
	AN960D10	..WASHER -	001-030	1
	AN502-10-7	..SCREW -	001-030	1
	AN3-7A	..BOLT -	001-030	1
	AN3-4A	.BOLT - (VALVE ATTACHING)	001-030	4
	AN365-1032	.NUT -	001-030	4
- 6	151-58366-5	.ROD ASSY - EMY SPEEDBRAKE DUMP VALVE	001-030	1
	HF-3	..ROD-END - UNIBAL SPHERICAL BEARING (HEC)	001-030	1
	151-58376	..ROD-END - HYD EMY SPEEDBRAKE DUMP VALVE	001-030	1
	AN315-3R	..NUT -	001-030	1
	151-58366-7	..ROD - EMERGENCY SPEEDBRAKE DUMP VALVE	001-030	1
	151-58388	..ROD-END - HYD EMY SPEEDBRAKE DUMP VALVE	001-030	1
	AN316-4L	..NUT -	001-030	1
	FL34-14	..ROD-END - UNIBAL SPHERICAL BEARING (HEC)	001-030	1
- 7	151-58385	.BRACKET ASSY - SPEEDBRAKE VALVE	001-030	1
	151-58335	.SPACER - HYDRAULIC EMY SPEEDBRAKE DUMP VALVE BRACKET	001-030	1
	AN3-6A	.BOLT - (BRACKET ATTACHING)	001-030	1
	AN3-7A	.BOLT - (BRACKET ATTACHING)	001-030	1
- 8	151-58369	.BELL-CRANK ASSY - HYDRAULIC EMY SPEEDBRAKE DUMP VALVE	001-030	1
- 9	AN4-11A	.BOLT - (BELL-CRANK TO BRACKET ATTACHING)	001-030	1
	AN960-416	.WASHER -	001-030	1
	NAS43DD-4-38	.SPACER -	001-030	1
-10	AN3-6A	.BOLT - (ROD TO BELL-CRANK ATTACHING)	001-030	1
	AN365-1032	.NUT -	001-030	1
-11	172-58810-17	.LINE ASSY - SPEEDBRAKE DUMP VALVE UTILITY RETURN (STA 125 TO CROSS STA 129)	001-030	1
-12	AN815-8D	.UNION -	001-030	1
	AN6290-8	.GASKET -	001-030	1
-13	191-58805-31	.LINE ASSY - EMY SPEEDBRAKE CLOSE (DUMP VALVE TEE TO UNION FUS STA 123)	001-030	1
-14	AN815-8D	.UNION -	001-030	1
-15	172-58810-29	.LINE ASSY - EMY SPEEDBRAKE CLOSE (UNION STA 123 TO UNION STA 150)	001-030	1
-16	AN815-8D	.UNION -	001-030	1
-17	172-58810-31	.LINE ASSY - EMY SPEEDBRAKE CLOSE (UNION STA 150 TO UNION STA 178)	001-030	1
-18	172-58810-33	.LINE ASSY - EMY SPEEDBRAKE OPEN (UNION STA 150 TO UNION STA 178)	001-030	1
-19	AN815-8D	.UNION -	001-030	1
-20	172-58810-25	.LINE ASSY - EMY SPEEDBRAKE OPEN (STA 150 TO DUMP VALVE)	001-030	1

FIGURE AND INDEX NUMBER	GROUP HYDRAULIC EQUIPMENT MAJOR ASSEMBLY SPEEDBRAKE HYDRAULIC EQUIPMENT PART NUMBER	1234567 NOMENCLATURE	CODE	UNITS PER ASSY
194 -21	AN742D10C	•CLAMP -	001-030	7
	AN520-10R10	•SCREW -	001-030	4
	AN365-1032	•NUT -	001-030	4
-22	AN815-4D	•UNION -		1
-23	172-58818-41	•LINE ASSY - PORT BRAKE PRESSURE (UNION STA 153 TO ELBOW STA 178)		1
-24	AN742D4	•CLAMP -		3
	AN520-10R8	•SCREW -		3
	AN365-1032	•NUT -		3
-25	AN815-4D	•UNION -		1
-26	172-58818-43	•LINE ASSY - STBD BRAKE PRESSURE (UNION STA 133 TO 178)		1
-27	AN742D4	•CLAMP -		4
	AN520-10R8	•SCREW -		3
	AN365-1032	•NUT -		3
-28	13A-71810-11	LINE ASSY - SPEEDBRAKE CLOSE (SEE FIG. 195)		REF
-29	13A-71810-7	LINE ASSY - SPEEDBRAKE OPEN (SEE FIG. 195)		REF
-30	172-58817-75	LINE ASSY - PORT BRAKE PRESS.(SEE FIG. 195)		REF
-31	172-58814-23	LINE ASSY - STBD BRAKE PRESS.(SEE FIG. 196)		REF
-32	170-58803-7	LINE ASSY - PORT BRAKE PRESS.(SEE FIG. 200)		REF
-33	170-58803-9	LINE ASSY - STBD BRAKE PRESS.(SEE FIG. 200)		REF
-34	151-58374-3	ROD - HYD EMY SPEEDBRAKE DUMP VALVE REAR (SEE FIG. 190)		REF
		-000-		

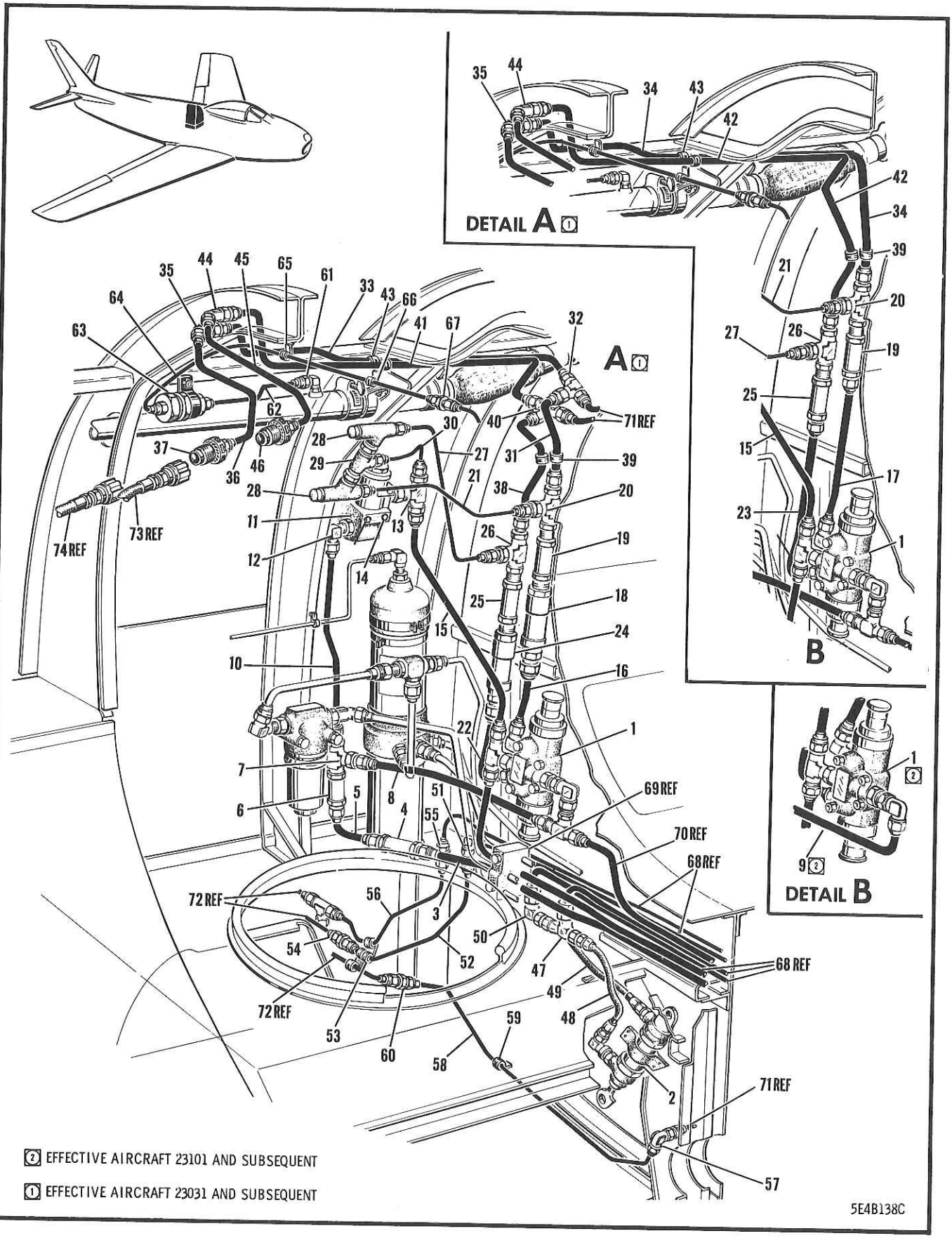

FIGURE 195 FUSELAGE STA 178-236 UTILITY HYDRAULIC (PORT)

FIGURE AND INDEX NUMBER	GROUP HYDRAULIC EQUIPMENT MAJOR ASSEMBLY FUSELAGE STA 178-236 UTILITY HYDRAULIC (PORT)		CODE	UNITS PER ASSY
	PART NUMBER	1234567 NOMENCLATURE		
195 -	13A-71064	HYDRAULIC EQUIP. INSTL - FUS STA 178-236 (SEE SECTION 3)		NP
- 1	13A-71301	.VALVE ASSY - HYDRAULIC SPEEDBRAKE SELECTOR (SEE FIG. 222)		REF
- 2	151-58641-7	.CYLINDER ASSY - HYD MAIN GEAR FAIRING DOOR (SEE FIG. 235)		REF
- 3	13A-71830-11	.LINE ASSY - UTILITY PRESSURE (TEE STBD TO CHECK VALVE PORT SIDE)	001-300	1
	13A-71830-69	.LINE ASSY - UTILITY PRESSURE (TEE STBD TO CHECK VALVE PORT SIDE)	301-	1
- 4	AN6249-8	.VALVE - 3000-PSI HYDRAULIC CHECK		1
- 5	13A-71810-3	.LINE ASSY - UTILITY PRESSURE (CHECK VALVE & ELBOW TO TEE STA 189)	001-210	1
	13A-71810-35	.LINE ASSY - UTILITY PRESSURE (CHECK VALVE & ELBOW TO TEE STA 189)	211-	1
	AN742D8C	.CLAMP -		1
	AN520-10R8	.SCREW -		1
	AN365-1032	.NUT -		1
- 6	AN6249-8	.VALVE - 3000-PSI HYDRAULIC CHECK		1
- 7	AN938D8	.TEE -		1
	AN6290-8	.GASKET -		3
	AN815-8D	.UNION -		1
	AN919-12D	.REDUCER -		1
- 8	13A-71830-13	.LINE ASSY - UTILITY PRESS. (TEE STA 189 PORT TO TEE & ELBOW ON SEL VALVE)	001-100	1
- 9	13A-71830-75	.LINE ASSY - UTILITY PRESS. (TEE STA 189 PORT TO TEE & ELBOW ON SEL VALVE)	101-210	1
	13A-71830-101	.LINE ASSY - UTILITY PRESS. (TEE STA 189 PORT TO TEE & ELBOW ON SEL VALVE)	211-	1
-10	13A-71810-5	.LINE ASSY - UTILITY PRESSURE (TEE & RED. STA 189 TO RELIEF-VALVE STA 188)	001-210	1
	13A-71810-37	.LINE ASSY - UTILITY PRESSURE (TEE & RED. STA 189 TO RELIEF-VALVE STA 188)	211-	1
	13A-71306	.RELIEF-VALVE ASSY - HYDRAULIC UTILITY SYS		1
-11	AN6279-6CD	..RELIEF-VALVE - HYDRAULIC PRESS. TWO-PORT OR		1
	A5805-6	..RELIEF-VALVE - (VMC)		
-12	AN833-6	..ELBOW -		1
	AN6290-6	..GASKET -		1
	AN6291-6	..RING -		1
	AN6289D6	..NUT -		1
	AN832-6D	..UNION -		1
-13	AN926-6D	..TEE -		1
	AN919-6D	..REDUCER -		1
	AN919-12D	..REDUCER -		1
	AN6290-6	..GASKET -		4
	AN6291-6	..RING -		1
	AN6289D6	..NUT -		1
-14	AN3-21A	.BOLT - (RELIEF-VALVE ATTACHING)		3
-15	13A-71830-21	.LINE ASSY - UTILITY RETURN (TEE ON RV STA 182 PORT TO TEE ON SEL VALVE PORT)		1
	AN3-4A	.BOLT -		4
-16	13A-71830-17	.LINE ASSY - SPEEDBRAKE OPEN (TOP ELBOW ON SELECTOR VALVE PORT TO RESTRICTOR)	001-030	1
-17	13A-71830-61	.LINE ASSY - SPEEDBRAKE OPEN (TOP ELBOW ON SELECTOR VALVE PORT TO RESTRICTOR)	031-	1
-18	831-8-100	.FUSE ASSY - HYDRAULIC (WEC) (FOR BREAKDOWN SEE EO 15-71CA-4)	001-030	1
	AN6290-8	.GASKET -	001-030	2
	AN815-8D	.UNION -	001-030	1

FIGURE AND INDEX NUMBER	GROUP HYDRAULIC EQUIPMENT MAJOR ASSEMBLY FUSELAGE STA 178-236 UTILITY HYDRAULIC (PORT)		CODE	UNITS PER ASSY
	PART NUMBER	1234567 NOMENCLATURE		
195 -19	151-58086-3	•VALVE ASSY - HYDRAULIC ONE-WAY RESTRICTOR (FOR BREAKDOWN SEE EO 15-71BB-4)		1
	AN6290-6	•GASKET -		2
	AN919-12D	•REDUCER -		2
-20	AN926-8D	•TEE -		1
	AN6290-8	•GASKET -		3
	AN815-8D	•UNION -		1
	AN919-10D	•REDUCER -		2
-21	13A-71810-15	•LINE ASSY - SPEEDBRAKE OPEN (TEE & REDUCER STA 179 TO THERMAL RV STA 190)	001-210	1
	13A-71810-39	•LINE ASSY - SPEEDBRAKE OPEN (TEE & REDUCER STA 179 TO THERMAL RV STA 190)	211-	1
-22	13A-71830-19	•LINE ASSY - SPEEDBRAKE CLOSE (LOWER UNION ON SEL VALVE PORT TO RESTRICTOR)	001-030	1
-23	13A-71830-63	•LINE ASSY - SPEEDBRAKE CLOSE (LOWER UNION ON SEL VALVE PORT TO RESTRICTOR)	031-	1
-24	831-8-50	•FUSE ASSY - HYDRAULIC (WEC) (FOR BREAKDOWN SEE EO 15-71CA-4)	001-030	1
	AN6290-8	•GASKET -	001-030	2
	AN815-8D	•UNION -	001-030	1
-25	1V4-20-30	•VALVE ASSY - HYDRAULIC 1-WAY RESTR (NAA) (SEE EO 15-71BB-4 FOR BREAKDOWN)		1
	AN6290-6	•GASKET -		2
	AN919-12D	•REDUCER -		2
-26	AN926-8D	•TEE -		1
	AN6290-8	•GASKET -		3
	AN815-8D	•UNION -		1
	AN919-10D	•REDUCER -		2
-27	13A-71810-17	•LINE ASSY - SPEEDBRAKE CLOSE (TEE & RED• STA 179 TO RELIEF-VALVE STA 190)	001-210	1
	13A-71810-41	•LINE ASSY - SPEEDBRAKE CLOSE (TEE & RED• STA 179 TO RELIEF-VALVE STA 190)	211-	1
	172-58646	•RELIEF-VALVE - HYD SPEEDBRAKE THERMAL		1
-28	AN6245B4	••RELIEF-VALVE - HYD THERMAL EXPANSION		2
-29	AN784D4	••TEE -		1
	AN815-4	••UNION -		2
	AN832-4D	••UNION -		1
	AN6290-4	••GASKET -		5
	AN6291-4	••RING -		2
	AN6289-4	••NUT -		2
	AN742D14C	•CLAMP -		2
	AN520-10R8	•SCREW -		2
	AN365-1032	•NUT -		2
-30	13A-71810-19	•LINE ASSY - UTILITY RETURN (TEE ON THERMAL RV STA 190 TO TEE ON RV STA 182)		1
-31	13A-71830-29	•LINE ASSY - SPEEDBRAKE OPEN (RESTRICTOR STA 181 TO TEE STA 179)	001-030	1
-32	AN804D8	•TEE -	001-030	1
	AN960-1216	•WASHER -	001-030	1
	AN924-8D	•NUT -	001-030	1
-33	13A-71810-7	•LINE ASSY - SPEEDBRAKE OPEN (BHD TEE STA 179 PORT TO BHD ELBOW STA 205 PORT)	001-030	1
-34	13A-71810-27	•LINE ASSY - SPEEDBRAKE OPEN (RESTRICTOR STA 181 TO BHD ELL• STA 205 PORT)	031-	1
-35	AN837-8D	•ELBOW -		1
	AN960D1216	•WASHER -		1
	AN924-8D	•NUT -		1
-36	13A-71810-9	•LINE ASSY - SPEEDBRAKE OPEN (BHD ELL• STA 205 PORT TO REAR DISC• STA 219 STBD)	001-074	1
	13A-71810-31	•LINE ASSY - SPEEDBRAKE OPEN (BHD ELL• STA 205 PORT TO REAR DISC• STA 219 STBD)	075-210	1

FIGURE AND INDEX NUMBER	GROUP HYDRAULIC EQUIPMENT MAJOR ASSEMBLY FUSELAGE STA 178-236 UTILITY HYDRAULIC (PORT) PART NUMBER	1234567 NOMENCLATURE	CODE	UNITS PER ASSY
195 -	13A-71810-43	•LINE ASSY - SPEEDBRAKE OPEN (BHD ELL• STA 205 PORT TO REAR DISC• STA 219 STBD)	211-	1
	13A-71121	•BRACKET - HYDRAULIC DISCONNECT STRAP MOUNT		1
-37	155-S2-8D	•COUPLING HALF - HOSE SELF-SEALING (AQC)		1
	AN960D1216	•WASHER -		1
	AN924-8D	•NUT -		1
-38	13A-71830-31	•LINE ASSY - SPEEDBRAKE CLOSE (FUSE & RESTRICTOR STA 182 TO TEE STA 179)	001-030	1
-39	AN742D10C	•CLAMP -		2
	AN520-10R8	•SCREW -		1
	AN365-1032	•NUT -		1
-40	AN804D8	•TEE -	001-030	1
	AN960-1216	•WASHER -	001-030	1
	AN924-8D	•NUT -	001-030	1
-41	13A-71810-11	•LINE ASSY - SPEEDBRAKE CLOSE (BHD TEE STA 179 PORT TO BHD ELBOW STA 205 PORT)	001-030	1
-42	13A-71810-29	•LINE ASSY - SPEEDBRAKE CLOSE (RESTR STA 182 PORT TO BHD ELL• STA 205 PORT)	031-	1
-43	AN742D10C	•CLAMP -		2
	AN520-10R8	•SCREW -		2
	AN365-1032	•NUT -		2
-44	AN837-8D	•ELBOW -		1
	AN960D1216	•WASHER -		1
	AN924-8D	•NUT -		1
-45	13A-71810-13	•LINE ASSY - SPEEDBRAKE CLOSE (BHD ELL• STA 204 PORT TO REAR DISC• STA 214 STBD)	001-074	1
	13A-71810-33	•LINE ASSY - SPEEDBRAKE CLOSE (BHD ELL• STA 204 PORT TO REAR DISC• STA 214 STBD)	075-	1
-46	155-S2-8D	•COUPLING HALF - SELF-SEALING (AQC)		1
	AN960D1216	•WASHER -		1
	AN924-8D	•NUT -		1
-47	AN833-4D	•ELBOW -		1
	AN960D716	•WASHER -		1
	AN924-4D	•NUT -		1
-48	3H3-4-0140	•HOSE ASSY - PLASTIC COVERED (NAA) (FAIRING DOOR CLOSE)		1
	AN26-17A	•BOLT -		1
	AN26-16A	•BOLT -		1
	AN960-616	•WASHER -		2
	AN364-624	•NUT -		2
-49	3H3-4-0120	•HOSE ASSY - PLASTIC COVERED (NAA) (FAIRING DOOR OPEN)		1
-50	AN833-4D	•ELBOW -		1
	AN960D716	•WASHER -		1
	AN924-4D	•NUT -		1
-51	AN833-4D	•ELBOW -		1
	AN960D716	•WASHER -		1
	AN924-4D	•NUT -		1
-52	191-58811-11	•LINE ASSY - LANDING GEAR UP (BHD ELBOW STA 180 TO UNION WHEEL WELL PORT SIDE)		1
-53	AN742D6C	•CLAMP -		2
	AN520-10R8	•SCREW -		1
	AN365-1032	•NUT -		1
-54	AN815-4D	•UNION -		1
-55	AN832-4	•UNION -		1
	AN924-4D	•NUT -		1
	AN837-4	•ELBOW -		1
-56	191-58811-9	•LINE ASSY - LANDING GEAR DOWN (BHD UNION STA 182 PORT TO BHD TEE WHL/W PORT)		1
-57	AN833-4D	•ELBOW -		1

FIGURE AND INDEX NUMBER	GROUP HYDRAULIC EQUIPMENT MAJOR ASSEMBLY FUSELAGE STA 178-236 UTILITY HYDRAULIC (PORT) PART NUMBER	1234567 NOMENCLATURE	CODE	UNITS PER ASSY
195 -	AN960D716	•WASHER -		1
	AN924-4D	•NUT -		1
-58	172-58817-75	•LINE ASSY - BRAKE PRESSURE (BHD ELBOW STA 178 TO UNION WHEEL WELL PORT SIDE)	001-244	1
	13A-71810-45	•LINE ASSY - BRAKE PRESSURE (BHD ELBOW STA 178 TO UNION WHEEL WELL PORT SIDE)	245-	1
-59	AN742D6C	•CLAMP -		1
-60	AN815-4D	•UNION -		1
-61	AN822-4	•ELBOW -		1
-62	13A-71830-27	•LINE ASSY - AIR-PRESSURE SUPPLY (H/VENT DUCT STA 195 PORT TO FILTER STA 197)		1
-63	37808	•FILTER ASSY - (PPI) - AIR		1
	AN742D18C	•CLAMP -		1
	AN520-10R8	•SCREW -		1
	AN365-1032	•NUT -		1
-64	13A-71820-31	•LINE ASSY - AIR-PRESSURE SUPPLY (FILTER STA 196 PORT LONGN TO UNION STA 203)		1
-65	AN742D8	•CLAMP -		1
	AN520-10R8	•SCREW -		1
	AN365-1032	•NUT -		1
-66	AN742D8	•CLAMP -		1
	AN520-10R8	•SCREW -		1
	AN365-1032	•NUT -		1
-67	AN815-4D	•UNION -		1
-68	CROSS REFERENCE	LINE ASSY - (SEE FIG. 197)		REF
-69	13A-71147	SUPPORT ASSY - HYDRAULIC LINE BLOCK STA 181 (SEE SECTION 3)		REF
-70	13A-71830-15	LINE ASSY - UTILITY PRESSURE (SEE FIG. 196)		REF
-71	CROSS REFERENCE	LINE ASSY - (SEE FIG. 194)		REF
-72	CROSS REFERENCE	LINE ASSY - (SEE FIG. 201)		REF
-73	AN6292-8-22	HOSE ASSY - HYD & PNEU HIGH PRESSURE SWIVEL CONNECTING (SEE FIG. 207)		REF
-74	AN6292-8-16-3/4	HOSE ASSY - HYD & PNEU HIGH PRESSURE SWIVEL CONNECTING (SEE FIG. 207)		REF
		(CONTINUED SEE FIG. 196)		

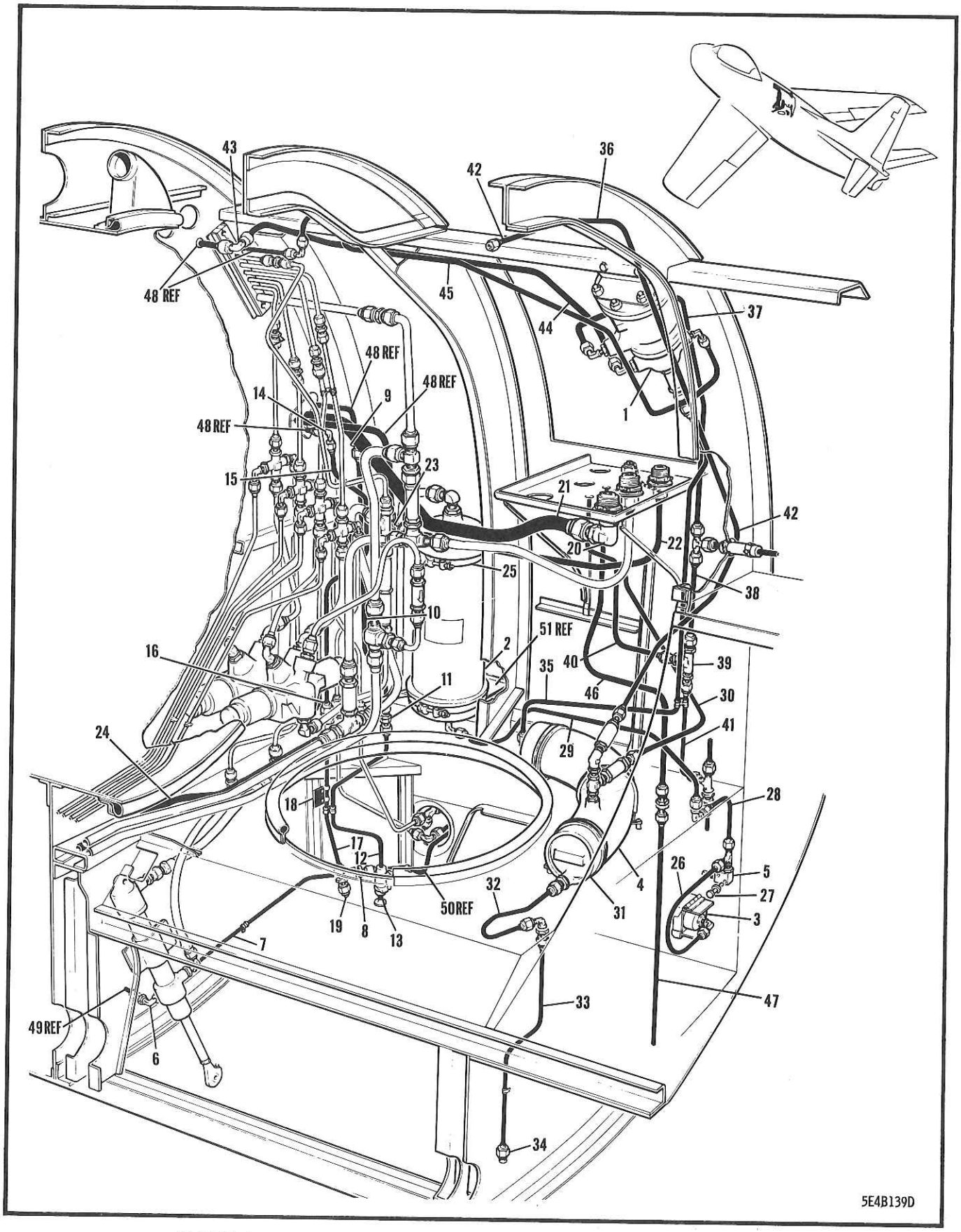

FIGURE 196 FUSELAGE STA 178-236 UTILITY HYDRAULIC (STARBOARD)

FIGURE AND INDEX NUMBER	PART NUMBER	1234567 NOMENCLATURE	CODE	UNITS PER ASSY
GROUP HYDRAULIC EQUIPMENT				
MAJOR ASSEMBLY FUSELAGE STA 178-236 UTILITY HYDRAULIC (STARBOARD)				
196 -	13A-71064	HYDRAULIC EQUIP. INSTL - FUS STA 178-236 (SEE FIG. 195)		REF
- 1	13A-71403	•REGULATOR ASSY - HYDRAULIC UTILITY RSRVR (SEE FIG. 229)		REF
- 2	13A-71404	•ACCUMULATOR ASSY - HYDRAULIC 200-CU/IN (SEE FIG. 226)		REF
- 3	170-58639-901	•GAUGE ASSY - HYDRAULIC ACCUM AIR-PRESSURE STA 205 CANTED (SEE FIG. 228)		REF
- 4	170-58650-950	•RESERVOIR ASSY - HYDRAULIC AIR-STORAGE (SEE FIG. 227)		REF
- 5	170-58643-802	•VALVE ASSY - HYDRAULIC ACCUM MOUNT AIR (SEE FIG. 228)		1
- 6	AN833-4D	•ELBOW -		1
	AN960D716	•WASHER -		1
	AN924-4D	•NUT -		1
- 7	172-58814-23	•LINE ASSY - BRAKE PRESSURE (ELBOW STA 178 TO UNION STA 181)	001-210	1
	13A-71830-113	•LINE ASSY - BRAKE PRESSURE (ELBOW STA 178 TO UNION STA 181)	211-	1
			001-662	2
	AN742D6C	•CLAMP -	663-	3
	AN742D6C	•CLAMP -		1
	AN520-10R8	•SCREW -		1
	AN365-1032	•NUT -		1
- 8	AN815-4D	•UNION -		1
- 9	AN919-6D	•REDUCER -		1
-10	13A-71830-37	•LINE ASSY - UTILITY RSRVR (SCUPPER DRAIN UNION STA 180 TO BHD UNION ON ENGINE-BAY FLOOR)		1
-11	AN832-6D	•UNION -		1
	AN924-6D	•NUT -		1
-12	172-58813-41	•LINE ASSY - UTILITY RSRVR (SCUPPER DRAIN FROM FLOOR STA 182 TO HOSE COUPLING)		1
-13	AN884-6-12	•HOSE - AROMATIC RESISTANT SYNTHETIC		2
	AN737TW26	•CLAMP -		1
-14	AN821-6D	•ELBOW -		1
-15	13A-71830-35	•LINE ASSY - UTILITY RSRVR DRAIN LINE UNION STA 180 TO BHD UNION ENGINE-BAY FL		1
-16	AN832-6D	•UNION -		1
	AN960D916	•WASHER -		1
	AN924-6D	•NUT -		1
-17	172-58814-27	•LINE ASSY - RESERVOIR DRAIN (UNION STA 180 TO UNION STA 181)		3
	AN742D8C	•CLAMP -		1
	AN520-10R8	•SCREW -		1
	AN365-1032	•NUT -		1
-18	151-58424	•NAME-PLATE - HYDRAULIC MAIN RSRVR DRAIN		2
	AN742D8C	•CLAMP -		2
	AN520-10R8	•SCREW -		2
	AN365-1032	•NUT -		1
-19	AN815-6D	•UNION -		1
	AN929-6D	•CAP -		1
-20	AN939D12	•ELBOW -		1
	AN6290-12	•GASKET -		1
	AN6291-12	•RING -		1
	AN6289D12	•NUT -		1
	AN815-12D	•UNION -		1
-21	13A-71820-3	•LINE ASSY - UTILITY SUCTION (ENG GRD DISC. PNL STA 198 FWD THROUGH BHD STA 178)		1
-22	13A-71820-11	•LINE ASSY - UTILITY CASE DRAIN (ENG GROUND DISCONNECT PANEL THROUGH BULKHEAD)		

FIGURE AND INDEX NUMBER	GROUP HYDRAULIC EQUIPMENT MAJOR ASSEMBLY FUSELAGE STA 178-236 UTILITY HYDRAULIC (STARBOARD) PART NUMBER	1234567 NOMENCLATURE	CODE	UNITS PER ASSY
196 -	AN742D8C	•CLAMP -		1
	AN520-10R8	•SCREW -		1
	AN365-1032	•NUT -		1
-23	AN821-6D	•ELBOW -		1
-24	13A-71830-15	•LINE ASSY - UTILITY PRESURE (TEE AT SEL VALVE PORT TO ACCUM STA 187 STBD)	001-100	1
	AN742D10C	•CLAMP -	001-100	3
	AN520-10R8	•SCREW -	001-100	3
	AN365-1032	•NUT -	001-100	3
-25	325-625-5.594-S	•CLAMP - T-BOLT STAINLESS STEEL (MPC) (ACCUMULATOR RETAINING)	001-100	2
	AN3-3A	•BOLT -		
-26	191-58809-27	•LINE ASSY - ACCUMULATOR A/PRESS (TEE ON AIR FILLER TO ELBOW ON GAUGE)	001-100 001-100	4 1
-27	AN3-13A	•BOLT - (AIR VALVE RETAINING)		
	AN960D10	•WASHER -	001-100	2
-28	191-58809-29	•LINE ASSY - ACCUM A/PRESS (TEE ON AIR FILLER TO ELBOW ON FLOOR STA 205)	001-100 001-100	2 1
	AN833-4	•ELBOW -		
	AN960D716	•WASHER -	001-100	1
	AN924-4	•NUT -	001-100	1
-29	13A-71830-59	•LINE ASSY - ACCUM AIR-PRESSURE (ELBOW ON FLOOR STA 205 TO ACCUMULATOR ELBOW)	001-100 001-100	1 1
-30	13A-71820-15	•LINE ASSY - EXT AIR-PRESSURE SUPPLY (ENG GRD DISCONNECT TO SWING CV STA 204)		1
	AN742D6C	•CLAMP -		
	AN520-10R8	•SCREW -		1
	AN365-1032	•NUT -		1
-31	AN742D50C	•CLAMP - (RESERVOIR RETAINING)		1
	NAS43DD-3-40	•SPACER -		3
	NAS43DD-3-40	•SPACER -	001-045	2
	NAS43DD-3-36	•SPACER -	046-	1
	NAS43DD-3-36	•SPACER -	001-045	1
	153-487150-31	•SHIM - WING TIP FUEL DROP TANK NUT-PLATE	046-	2
	153-487150-31	•SHIM - WING TIP FUEL DROP TANK NUT-PLATE	001-045	1
	AN507-1032R20	•SCREW -	046-	2
	AN507-1032R20	•SCREW -	001-045	1
	AN520-10R8	•SCREW -	046-	2
	AN520-10R18	•SCREW -	001-045	2
	AN365-1032	•NUT -	046-	1
-32	172-58813-17	•LINE ASSY - AIR-PRESSURE (DRAIN UNION ON BOTTLE TO FLOOR ELBOW STA 206)		3
	13A-71820-39	•LINE ASSY - AIR-PRESSURE (DRAIN UNION ON BOTTLE TO ELBOW ON FLOOR STA 206)	001-100	1
	13A-71820-49	•LINE ASSY - AIR-PRESSURE (DRAIN UNION ON BOTTLE TO ELBOW ON FLOOR STA 206)	101-370	1
	AN833-4D	•ELBOW -	371-	1
	AN960D716	•WASHER -		1
	AN924-4D	•NUT -		1
-33	13A-71810-25	•LINE ASSY - AIR-PRESSURE (DRAIN ELBOW ON FLOOR STA 206 TO PLUG STA 207)		1
	AN742D6C	•CLAMP -		1
	NAS43DD-3-56	•SPACER -		1
	AN520-10R22	•SCREW -		1
	AN365-1032	•NUT -		1
-34	AN806D4	•PLUG -		1
-35	13A-71820-29	•LINE ASSY - AIR-PRESSURE SUPPLY (A/PRESS RESERVOIR ELBOW ON FLOOR TO CHECK VALVE UNDER REGULATOR)		1
-36	AN3-4A	•BOLT - (REGULATOR RETAINING)		3

FIGURE AND INDEX NUMBER	GROUP HYDRAULIC EQUIPMENT MAJOR ASSEMBLY FUSELAGE STA 178-236 UTILITY HYDRAULIC (STARBOARD) PART NUMBER	1234567 NOMENCLATURE	CODE	UNITS PER ASSY
196 -	AN3-13A	•BOLT - (REGULATOR RETAINING)		2
	AN960D10	•WASHER -		2
	AN363-1032	•NUT -		2
-37	13A-71820-25	•LINE ASSY - AIR DRAIN (AIR-PRESSURE REGULATOR TO TEE STA 200)		1
-38	13A-71820-17	•LINE ASSY - DRAIN (TEE STA 201 TO TEE STA 201)		1
-39	AN783D6	•TEE -		1
	AN6290-6	•GASKET -		1
	AN924-6D	•NUT -		1
	AN919-6D	•REDUCER -		1
-40	13A-71820-23	•LINE ASSY - AIR DRAIN (ENGINE GROUND DISC• PANEL STA 196 TO TEE STA 197 WEB)		1
	AN742D6C	•CLAMP -		1
-41	13A-71820-19	•LINE ASSY - DRAIN (TEE STA 201 TO TEE ON SCUPPER OIL DRAIN LINE ON FLOOR STA 201)		1
-42	13A-71820-13	•LINE ASSY - AIR-PRESSURE SUPPLY (UNION STA 203 TO CHECK VALVE STA 204)		1
	AN742D6C	•CLAMP -		2
	AN520-10R8	•SCREW -		2
	AN365-1032	•NUT -		2
-43	AN821-6D	•ELBOW -		1
-44	13A-71820-27	•LINE ASSY - RESERVOIR VENT (UNION STA 181 TO RESERVOIR PORT ON REGULATOR)		1
	AN742D8C	•CLAMP -		1
	AN520-10R8	•SCREW -		1
	AN365-1032	•NUT -		1
-45	13A-71820-21	•LINE ASSY - RESERVOIR (AIR-PRESSURE RGLR THROUGH BHD STA 178 TO RESERVOIR)		1
	AN742D6C	•CLAMP -		1
	AN520-10R8	•SCREW -		1
	AN365-1032	•NUT -		1
	AN821-6D	•ELBOW -		1
-46	13A-71820-41	•LINE ASSY - DRAIN (ENGINE GRD DISC• PANEL STA 196 TO BHD FTG IN WHL/W WEB)	A19	1
	AN832-6D	•UNION -	A31	1
	AN924-6D	•NUT -	A31	1
-47	13A-71820-43	•LINE ASSY - DRAIN (BHD FITTING IN WHEEL WELL WEB TO ATMOSPHERE)	A31	1
	AN742D8C	•CLAMP -	A31	1
-48	CROSS REFERENCE	LINE ASSY - UTILITY RESERVOIR VENT (SEE FIG• 193)		REF
-49	172-58818-43	LINE ASSY - BRAKE PRESSURE (SEE FIG• 194)		REF
-50	151-58810-35	LINE ASSY - BRAKE (SEE FIG• 201)		REF
-51	161-58247	SUPPORT ASSY - HYDRAULIC ACCUMULATOR LOWER (SEE SECTION 3)		REF
		(CONTINUED SEE FIG• 197)		

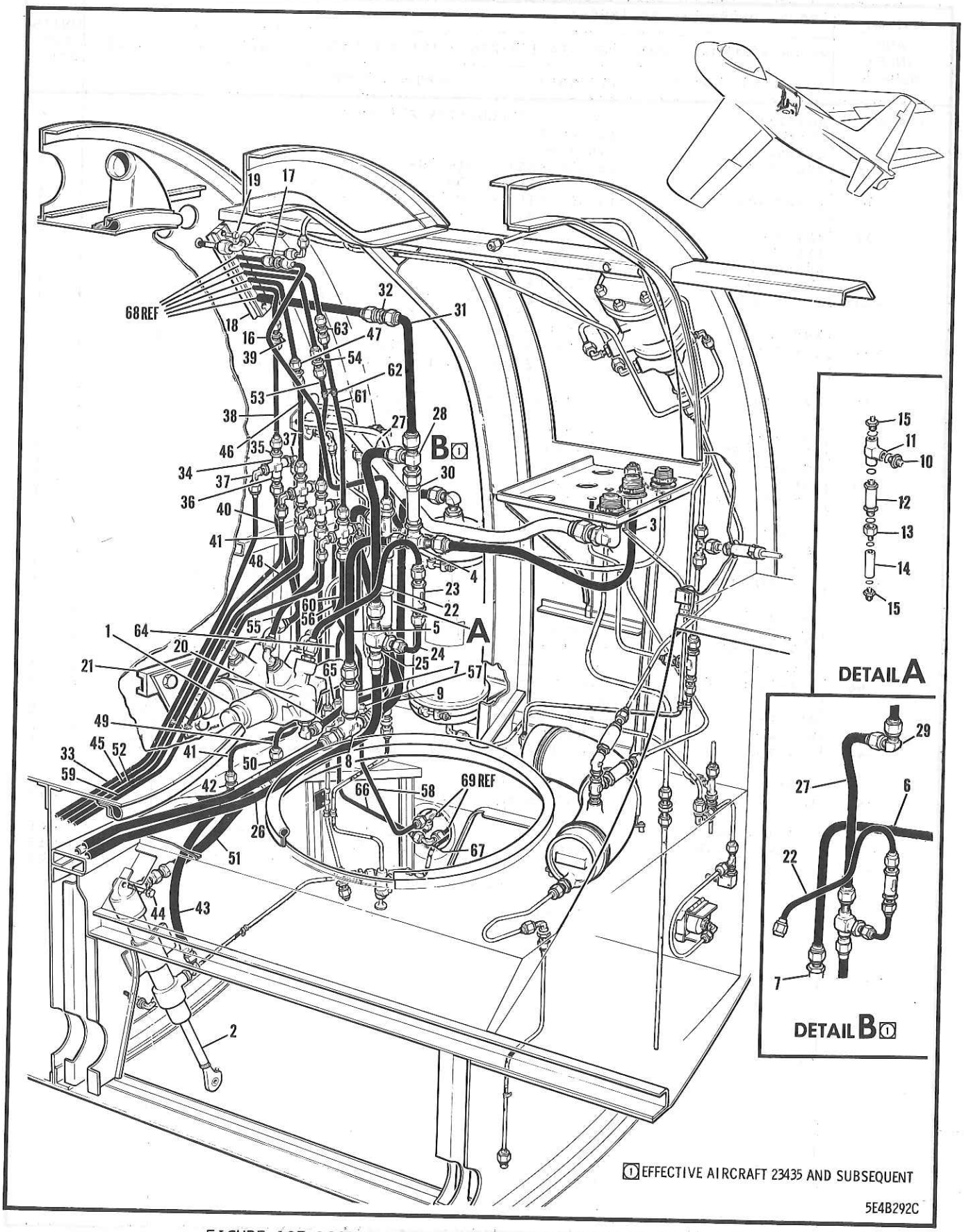

FIGURE 197 DOOR & LANDING GEAR STARBOARD SIDE HYDRAULIC

FIGURE AND INDEX NUMBER	GROUP HYDRAULIC EQUIPMENT MAJOR ASSEMBLY DOOR & LANDING GEAR STARBOARD SIDE HYDRAULIC PART NUMBER	1234567 NOMENCLATURE	CODE	UNITS PER ASSY
197 -	13A-71064	HYDRAULIC EQUIP. - INSTL FUS STA 178-236 (SEE FIG. 195)		REF
- 1	13A-71406-3	.VALVE ASSY - HYDRAULIC LDG GEAR & FAIRING DOOR SELECTOR (SEE FIG. 223)		REF
- 2	151-58641-7	.CYLINDER ASSY - HYD MAIN GEAR FAIRING DOOR (SEE FIG. 235)		REF
- 3	13A-71820-5	.LINE ASSY - UTILITY PRESSURE GROUND ENGINE DISC. PANEL (STA 198 TO TEE STA 190 & PURGE VALVE)	001-434	1
- 4	AN783D8	.TEE -	001-300	1
	AN784D8	.TEE -	301-434	1
	AN6290-8	.GASKET -	001-434	1
	AN919-12D	.REDUCER -	001-434	1
	AN6290-6	.GASKET -	001-434	1
- 5	13A-71830-3	.LINE ASSY - UTILITY PRESSURE (PURGE VALVE TEE STA 187 STBD TO CV TEE STA 183)	001-300	1
	13A-71830-65	.LINE ASSY - UTILITY PRESSURE (PURGE VALVE TEE STA 187 STBD TO CV TEE STA 183)	301-434	1
- 6	13A-71820-53	.LINE ASSY - UTILITY PRESSURE ENG GRD DISC. PANEL (STA 198 TO CV STA 183)	435-	1
	AN742D10C	.CLAMP -		1
	AN520-10R8	.SCREW -		1
	AN365-1032	.NUT -		1
- 7	AN6249-8	.VALVE - 3000-PSI HYDRAULIC CHECK		1
	AN742D18C	.CLAMP -		1
	AN520-10R8	.SCREW -		1
	AN365-1032	.NUT -		1
- 8	AN926-8D	.TEE -		1
	AN6290-8	.GASKET -		3
	AN920-8D	.UNION -		2
- 9	13A-71830-5	.LINE ASSY - UTILITY PRESSURE (TEE STA 183 STARBOARD AT FLOOR TO TEE)	001-300	1
	13A-71830-67	.LINE ASSY - UTILITY PRESSURE (TEE STA 183 STARBOARD AT FLOOR TO TEE)	301-	1
-10	AN919-12D	.REDUCER -		2
	AN6290-6	.GASKET -		5
-11	AN926-6D	.TEE -		1
-12	AN6249-6	.VALVE - 3000-PSI HYDRAULIC CHECK		1
-13	AN894D6-4	.BUSHING -		1
	AN6290-4	.GASKET -		2
-14	1V7-40-30M	.VALVE ASSY - HYDRAULIC 2-WAY RESTR (NAA) (AS PER EO 05-5E-6A/44)		1
-15	AN919-6D	.REDUCER -		2
-16	13A-71830-7	.LINE ASSY - UTILITY PRESSURE (TEE STA 182 TO UNION STA 181)	001-210	1
	13A-71830-77	.LINE ASSY - UTILITY PRESSURE (TEE STA 182 TO UNION STA 181)	211-	1
-17	AN815-4D	.UNION -		1
-18	13A-71208	.SUPPORT ASSY - HYDRAULIC LINE FUS STA 178		1
	13A-71206-3	..BLOCK - SUPPORT		1
	13A-71206-5	..BLOCK - SUPPORT		1
	13A-71206-7	..BLOCK - SUPPORT		2
	13A-71207	..ANGLE - HYDRAULIC LINE SUP. FUS STA 178		1
-19	AN3-13A	.BOLT -		2
	AN520-10R8	.SCREW -		3
	AN960-10L	.WASHER -	001-300	5
	AN960-10L	.WASHER -	301-	2
	2W1-13-26-42	.WASHER - PLAIN (NAA)	301-	3
-20	13A-71830-9	.LINE ASSY - UTILITY PRESS. (TEE CV & RESTR TO LANDING GEAR SELECTOR VALVE)	001-210	1

FIGURE AND INDEX NUMBER	GROUP HYDRAULIC EQUIPMENT MAJOR ASSEMBLY DOOR & LANDING GEAR STARBOARD SIDE HYDRAULIC PART NUMBER	1234567 NOMENCLATURE	CODE	UNITS PER ASSY
197 -	13A-71830-79	•LINE ASSY - UTILITY PRESS• (TEE CV & RESTR TO LANDING GEAR SELECTOR VALVE)	211-	1
-21	13A-71227	•RETAINER - HYDRAULIC LDG GEAR EMY SELECTOR VALVE ATT BOLT		1
	AN3-4A	•BOLT -		3
	AN365-1032	•NUT -		3
-22	13A-71830-33	•LINE ASSY - UTILITY RETURN (PORT LANDING GEAR SELECTOR VALVE TO CV STARBOARD)	001-370	1
	13A-71830-117	•LINE ASSY - UTILITY RETURN (PORT LANDING GEAR SELECTOR VALVE TO CV STARBOARD)	371-	1
-23	AN6249-6	•VALVE - 3000-PSI HYDRAULIC CHECK		1
-24	13A-71830-25	•LINE ASSY - UTILITY RETURN (CHECK VALVE TO TEE STA 184 STARBOARD)		1
	AN919-12D	•REDUCER -		1
	AN6290-6	•GASKET -		1
-25	AN783D8	•TEE -		1
-26	13A-71830-23	•LINE ASSY - UTILITY RETURN (TEE ON SEL VALVE RETURN TO TEE STA 184 STBD)		1
	AN742D10C	•CLAMP -		1
	AN520-10R8	•SCREW -		1
	AN365-1032	•NUT -		1
-27	13A-71820-9	•LINE ASSY - UTILITY RET (TEE STA 185 TO TEE ABOVE PURGE VALVE STA 189)		1
-28	AN804D8	•TEE -	001-434	1
	AN894D8-6	•BUSHING -	001-434	1
	AN6290-8	•GASKET -	001-434	1
	AN6291-8	•RING -	001-434	1
	AN6289D8	•NUT -	001-434	1
-29	AN821-8D	•ELBOW -	435-	1
-30	1116-51•7126	•VALVE - (PAC) (PURGE)	001-119	1
	1116-51•7126-M1	•VALVE - (PAC) (PURGE)	120-434	1
-31	13A-71820-7	•LINE ASSY - UTILITY RET (PURGE VALVE STA 190 TO UNION STA 187)		1
	AN742D10C	•CLAMP -		1
	AN520-10R8	•SCREW -		1
	AN365-1032	•NUT -		1
-32	AN815-8D	•UNION -		1
-33	13A-71830-39	•LINE ASSY - FAIRING DOOR CLOSE (CROSS STA 180 TO ELL• ON FLOOR STA 180)	001-210	1
	13A-71830-81	•LINE ASSY - FAIRING DOOR CLOSE (CROSS STA 180 TO ELL• ON FLOOR STA 180)	211-	1
-34	AN925-4D	•CROSS -		4
-35	AN815-4D	•UNION -		4
-36	AN919-6D	•REDUCER -		4
-37	AN833-4D	•ELBOW -		8
	AN6289-4	•NUT -		8
	AN6291-4	•RING -		8
	AN6290-4	•GASKET -		16
-38	172-58810-63	•LINE ASSY - FAIRING DOOR CLOSE (CROSS STA 182 TO UNION STA 182)	001-210	1
	13A-71830-115	•LINE ASSY - FAIRING DOOR CLOSE (CROSS STA 182 TO UNION STA 182)	211-	1
-39	AN815-4D	•UNION -		1
-40	172-58813-63	•LINE ASSY - FAIRING DOOR CLOSE (CROSS STA 180 TO SELECTOR VALVE)	001-210	1
	13A-71830-103	•LINE ASSY - FAIRING DOOR CLOSE (CROSS STA 180 TO SELECTOR VALVE)	211-	1
-41	13A-71830-47	•LINE ASSY - FAIRING DOOR CLOSE (CROSS STA 180 TO ELBOW ON FLOOR STA 181)	001-210	1
	13A-71830-89	•LINE ASSY - FAIRING DOOR CLOSE (CROSS STA 180 TO ELBOW ON FLOOR STA 181)	211-	1

FIGURE AND INDEX NUMBER	GROUP HYDRAULIC EQUIPMENT MAJOR ASSEMBLY DOOR & LANDING GEAR STARBOARD SIDE HYDRAULIC PART NUMBER	1234567 NOMENCLATURE	CODE	UNITS PER ASSY
197 -42	AN833-4D	•ELBOW -		1
	AN960D716	•WASHER -		1
	AN924-4D	•NUT -		1
-43	3H3-4-0140	•HOSE ASSY - (NAA) (FAIRING DOOR CLOSE)		1
-44	AN26-17A	•BOLT -		1
	AN26-16A	•BOLT -		1
	AN960-616	•WASHER -		2
	AN364-624	•NUT -		2
-45	13A-71830-41	•LINE ASSY - FAIRING DOOR OPEN (CROSS STA 181 TO ELBOW ON FLOOR STA 181)	001-210	1
	13A-71830-83	•LINE ASSY - FAIRING DOOR OPEN (CROSS STA 181 TO ELBOW ON FLOOR STA 181)	211-	1
-46	13A-71830-57	•LINE ASSY - FAIRING DOOR OPEN (CROSS STA 181 TO UNION STA 182)	001-210	1
	13A-71830-99	•LINE ASSY - FAIRING DOOR OPEN (CROSS STA 181 TO UNION STA 182)	211-	1
-47	AN815-4D	•UNION -		1
-48	172-58813-65	•LINE ASSY - FAIRING DOOR OPEN (SELECTOR VALVE TO CROSS STA 181)	001-210	1
	13A-71830-105	•LINE ASSY - FAIRING DOOR OPEN (SELECTOR VALVE TO CROSS STA 181)	211-	1
-49	13A-71830-49	•LINE ASSY - FAIRING DOOR OPEN (CROSS STA 181 TO ELBOW STA 182 STARBOARD)	001-210	1
	13A-71830-91	•LINE ASSY - FAIRING DOOR OPEN (CROSS STA 181 TO ELBOW STA 180 STARBOARD)	211-	1
-50	AN833-4D	•ELBOW -		1
	AN960D716	•WASHER -		1
	AN924-4D	•NUT -		1
-51	3H3-4-0120	•HOSE ASSY - (NAA) (FAIRING DOOR OPEN)		1
-52	13A-71830-43	•LINE ASSY - LANDING GEAR DOWN (CROSS STA 182 TO UNION ON FLOOR STA 182)	001-210	1
	13A-71830-85	•LINE ASSY - LANDING GEAR DOWN (CROSS STA 182 TO UNION ON FLOOR STA 182)	211-	1
-53	13A-71830-55	•LINE ASSY - LANDING GEAR DOWN (CROSS STA 182 TO UNION STA 182)	001-210	1
	13A-71830-97	•LINE ASSY - LANDING GEAR DOWN (CROSS STA 182 TO UNION STA 182)	211-	1
-54	AN815-4D	•UNION -		1
-55	172-58813-67	•LINE ASSY - LANDING GEAR DOWN (CROSS STA 182 TO SELECTOR VALVE)	001-210	1
	13A-71830-107	•LINE ASSY - LANDING GEAR DOWN (CROSS STA 182 TO SELECTOR VALVE)	211-	1
-56	13A-71830-51	•LINE ASSY - LANDING GEAR DOWN (CROSS STA 182 TO UNION STA 180 STARBOARD)	001-210	1
	13A-71830-93	•LINE ASSY - LANDING GEAR DOWN (CROSS STA 182 TO UNION STA 180 STARBOARD)	211-	1
-57	AN832-4D	•UNION -		1
	AN960D716	•WASHER -		1
	AN924-4D	•NUT -		1
-58	191-58809-31	•LINE ASSY - LDG/GR DOWN (UNION ON FLOOR STA 180 TO TEE WING STA 62)		1
-59	13A-71830-45	•LINE ASSY - LDG/GR UP (CROSS STA 183 TO ELBOW ON FLOOR STA 182)	001-210	1
	13A-71830-87	•LINE ASSY - LDG/GR UP (CROSS STA 183 TO ELBOW ON FLOOR STA 182)	211-	1
	AN742D6C	•CLAMP -		2
	AN520-10R8	•SCREW -		1
	AN365-1032	•NUT -		1
-60	172-58813-69	•LINE ASSY - LANDING GEAR UP (CROSS STA 183 TO SELECTOR VALVE)	001-210	1

FIGURE AND INDEX NUMBER	GROUP HYDRAULIC EQUIPMENT MAJOR ASSEMBLY DOOR & LANDING GEAR STARBOARD SIDE HYDRAULIC PART NUMBER	1234567 NOMENCLATURE	CODE	UNITS PER ASSY
197 -	13A-71830-109	•LINE ASSY - LANDING GEAR UP (CROSS STA 183 TO SELECTOR VALVE)	211-	1
-61	13A-71830-53	•LINE ASSY - LANDING GEAR UP (CROSS STA 183 TO UNION STA 182)	001-210	1
	13A-71830-95	•LINE ASSY - LANDING GEAR UP CROSS STA 183 TO UNION STA 182)	211-	1
-62	AN742D6C	•CLAMP -		2
	AN520-10R8	•SCREW -		1
	AN365-1032	•NUT -		1
-63	AN815-4D	•UNION -		1
-64	172-58813-77	•LINE ASSY - LANDING GEAR UP (CROSS STA 183 TO UNION ON FLOOR STA 182)	001-210	1
	13A-71830-111	•LINE ASSY - LANDING GEAR UP (CROSS STA 183 TO UNION ON FLOOR STA 182)	211-	1
-65	AN832-4D	•UNION -		1
	AN960D716	•WASHER -		1
	AN924-4D	•NUT -		1
-66	191-58809-33	•LINE ASSY - LANDING GEAR UP (UNION ON FLOOR STA 182 TO ELBOW STA 186)		1
	AN742D6C	•CLAMP -		1
-67	AN821-4D	•ELBOW -		1
-68	CROSS REFERENCE	LINE ASSY - (SEE FIG. 193)		REF
-69	CROSS REFERENCE	LINE ASSY - (SEE FIG. 201)		REF
		(CONTINUED SEE FIG. 198)		

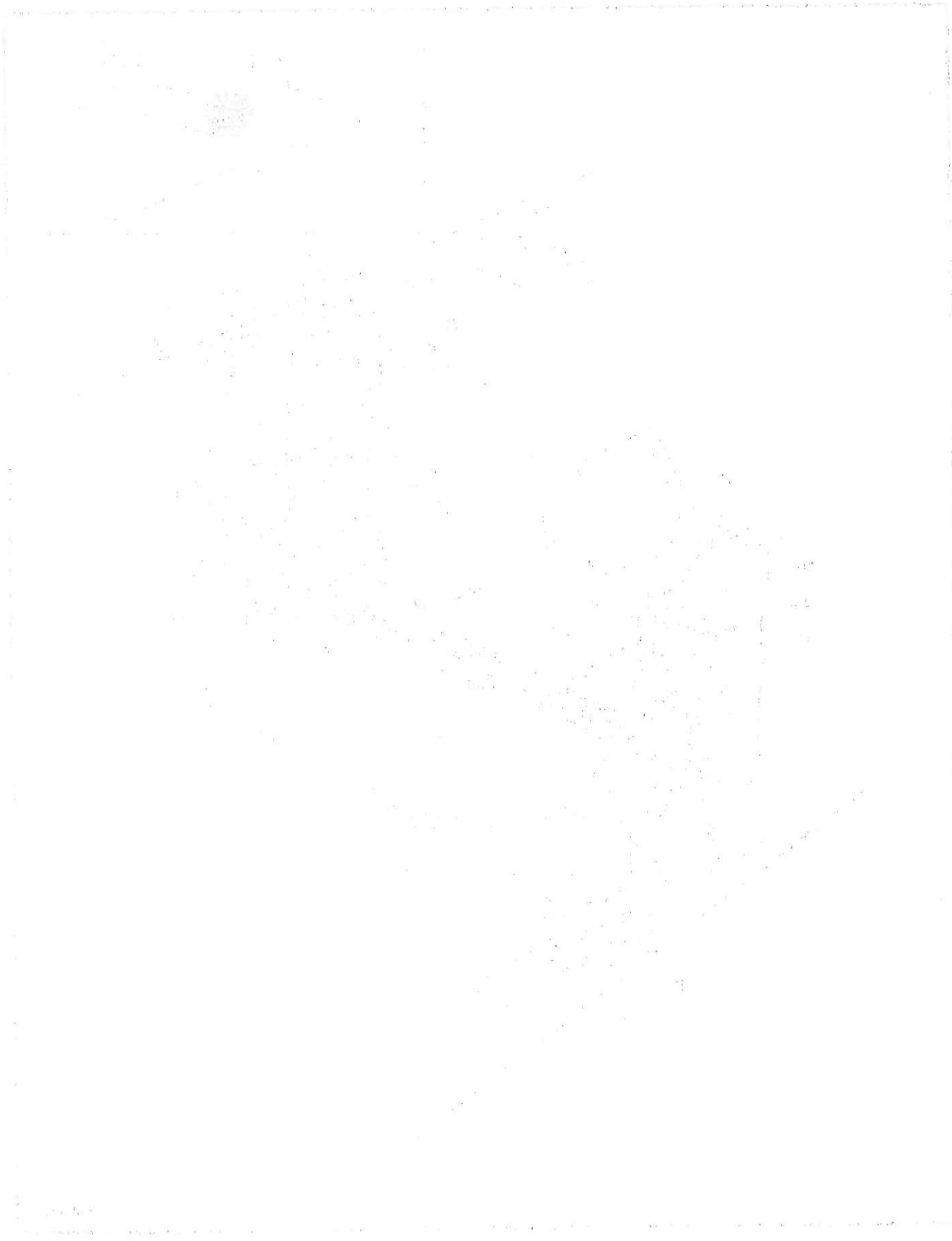

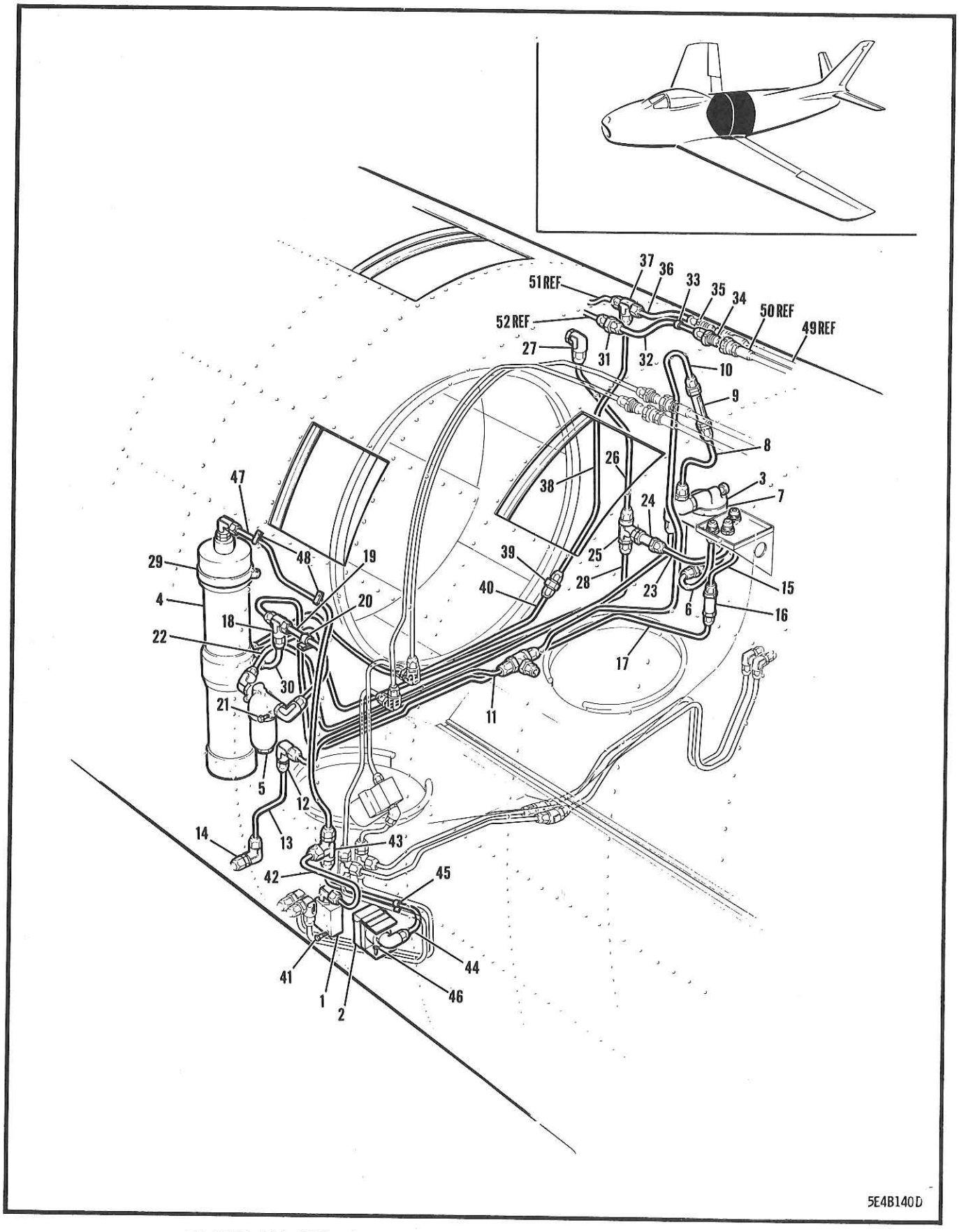

FIGURE 198 FUSELAGE STA 178-236 NORMAL HYDRAULIC EQUIPMENT

FIGURE AND INDEX NUMBER	GROUP HYDRAULIC EQUIPMENT MAJOR ASSEMBLY FUSELAGE STA 178-236 NORMAL HYDRAULIC EQUIPMENT PART NUMBER	1234567 NOMENCLATURE	CODE	UNITS PER ASSY
198 -	13A-71064	HYDRAULIC EQUIP. INSTL - FUS STA 178-236 (SEE FIG. 195)		REF
- 1	170-58643-801	.VALVE ASSY - HYDRAULIC ACCUMULATOR MOUNT AIR PORT SIDE (SEE FIG. 228)		REF
- 2	170-58639-903	.GAUGE ASSY - HYD ACCUM A/PRESS STA 205 CANTED (PORT SIDE) (SEE FIG. 228)		REF
- 3	13A-71405	.RESERVOIR ASSY - HYDRAULIC SURFACE CONTROL SYSTEM (STBD SIDE) (SEE FIG. 224)		REF
- 4	13A-71305	.ACCUMULATOR ASSY - NORMAL SUR CONTROL HYD SYSTEM (PORT SIDE) (SEE FIG. 225)		REF
- 5	13A-71307	.FILTER ASSY - HYDRAULIC NORMAL SUR CTL RET SYSTEM (PORT SIDE) (SEE FIG. 230)		REF
- 6	13A-71821-3	.LINE ASSY - NORMAL SURFACE CONTROL SUCTION (ENGINE GRD DISCONNECT PANEL STA 194 TO ELBOW ON RSRVR BOTTOM STA 192)		1
- 7	325-625-3.125	.CLAMP - T-BOLT STAINLESS STEEL (MPC)	001-300	2
		OR		
	13A-71225	.CLAMP - HYDRAULIC SURFACE CTL SYSTEM RSRVR	001-300	
	325-63-313-SH	.CLAMP - T-BOLT STAINLESS STEEL (MPC)	001-300	2
- 8	13A-71821-13	.LINE ASSY - NORMAL SURFACE CTL RESERVOIR (OUTBOARD DRAIN TO SIGHT GAUGE STA 191 STARBOARD SIDE)		1
	AN742D8C	.CLAMP -		1
	AN520-10R8	.SCREW -		1
	AN365-1032	.NUT -		1
- 9	165-58300	.GAUGE ASSY - HYD POWER CTL AIR-PURGE SIGHT (STARBOARD SIDE)		1
	AN6227B3	..PACKING -		2
	2W1R16-16-62	..WASHER - PLAIN (NAA)		2
	165-58321	..FITTING - HYDRAULIC POWER CONTROL AIR-PURGE SIGHT GAUGE		2
	165-58322	..TUBE ASSY - HYDRAULIC POWER CONTROL AIR-PURGE SIGHT GAUGE		1
	165-58325	..TUBE - HYDRAULIC SUR CTL AIR-PURGE SIGHT		1
-10	13A-71821-15	.LINE ASSY - NORMAL SURFACE CONTROL OUTBD DRAIN (SIGHT GAUGE STA 191 TO TEE STA 182 ON ENGINE BAY FLOOR STBD)		1
	AN742D8C	.CLAMP -		5
	NAS43DD-3-64	.SPACER -		1
	AN520-10R8	.SCREW -		3
	AN520-10R24	.SCREW -		1
	AN365-1032	.NUT -		4
	AN783D6	.TEE -		1
	AN6290-6	.GASKET -		1
	AN919-6D	.REDUCER -		1
	157-58414	.CAP ASSY - HYDRAULIC DISC. PANEL A/PRESS (STARBOARD SIDE)		1
	157-58532	..CAP - HYDRAULIC FITTING		1
	AN818-4D	..NUT -		1
	157-58413	..LINK - HYD DISC. PANEL A/PRESS CAP RTNR		1
	9C1-3-7	..SAFETY-CHAIN - (NAA)		1
-11	13A-71831-15	.LINE ASSY - POWER CONTROL RESERVOIR (VENT ELBOW ON ENGINE BAY FLOOR TO TEE STARBOARD SIDE)		1
	AN742D8C	.CLAMP -		2
	AN520-10R8	.SCREW -		2
	AN365-1032	.NUT -		2
-12	AN833-6D	.ELBOW -	001-370	1
	AN833-6	.ELBOW - (AS PER EO 05-5E-6B/13)	371-	1
	AN960D916	.WASHER -		1

FIGURE AND INDEX NUMBER	GROUP HYDRAULIC EQUIPMENT MAJOR ASSEMBLY FUSELAGE STA 178-236 NORMAL HYDRAULIC EQUIPMENT PART NUMBER	1234567 NOMENCLATURE	CODE	UNITS PER ASSY
198 -	AN924-6D	•NUT -		1
-13	172-58815-41	•LINE ASSY - POWER CONTROL RESERVOIR (VENT FROM TEE IN WHEEL WELL FLOOR TO ELBOW STA 187)		1
-14	AN821-6D	•ELBOW -	001-370	1
	AN821-6	•ELBOW - (AS PER EO 05-5E-6B/13)	371-	1
-15	13A-71821-11	•LINE ASSY - NORMAL SUR CTL CASE DRAIN (ENG GRD DISC• STA 194 TO CV STA 192 RH)	001-370	1
	13A-71821-1011	•LINE ASSY - NORMAL SUR CTL CASE DRAIN (ENG GRD DISC• STA 194 TO CV STA 192 RH) (AS PER EO 05-5E-6B/13)	371-	1
-16	AN6207-6	•VALVE - 1500-PSI HYDRAULIC CHECK (STBD)		1
-17	13A-71831-9	•LINE ASSY - NORMAL SURFACE CTL CASE DRAIN (CV STA 192 RH TO TEE STA 188 PORT)	001-370	1
	13A-71831-1021	•LINE ASSY - NORMAL SURFACE CTL CASE DRAIN (CV STA 192 RH TO TEE STA 188 PORT) (AS PER EO 05-5E-6B/13)	371-	1
	AN742D8C	•CLAMP -		2
	AN520-10R8	•SCREW -		2
	AN365-1032	•NUT -		2
-18	AN784D8	•TEE -		1
	AN6290-8	•GASKET -		1
	AN919-12D	•REDUCER -		1
-19	13A-71811-5	•LINE ASSY - NORMAL SURFACE CTL RETURN (TEE STA 190 PORT SIDE TO FILTER STA 193)	001-370	1
	13A-71811-11	•LINE ASSY - NORMAL SURFACE CTL RETURN (TEE STA 190 PORT SIDE TO FILTER STA 193)	371-	1
-20	AN742D22C	•CLAMP -		1
	AN742D10C	•CLAMP -		1
	AN520-10R8	•SCREW -		1
	AN365-1032	•NUT -		1
-21	AN4-22A	•BOLT -		2
	NAS43-3-32	•SPACER -		2
-22	13A-71831-11	•LINE ASSY - NORMAL SURFACE CONTROL RETURN (FLT STA 189 LH TO RSRVR STA 190 RH)		1
	AN742D10C	•CLAMP -		4
	AN520-10R8	•SCREW -		4
	AN365-1032	•NUT -		4
-23	13A-71821-5	•LINE ASSY - NORMAL SURFACE CTL PRESSURE (ENGINE GROUND DISCONNECT PANEL STA 194 TO CV STA 190 STBD SIDE)	001-210	1
	13A-71821-27	•LINE ASSY - NORMAL SURFACE CTL PRESSURE (ENGINE GROUND DISCONNECT PANEL STA 194 TO CV STA 190 STBD SIDE)	211-	1
-24	AN6249-8	•CHECK-VALVE - 3000 PSI HYDRAULIC (STBD)		1
	AN6290-8	•GASKET -		1
-25	AN783D8	•TEE -		1
-26	13A-71831-3	•LINE ASSY - NORMAL SURFACE CTL PRESSURE (TEE STA 186 TO ELBOW STBD SIDE)	001-210	1
	13A-71831-17	•LINE ASSY - NORMAL SURFACE CTL PRESSURE (TEE STA 186 TO ELBOW STBD SIDE)	211-	1
-27	AN821-8D	•ELBOW -		1
-28	13A-71831-5	•LINE ASSY - NORMAL SURFACE CTL PRESSURE (TEE STA 186 STBD TO PRESSURE PORT OF ACCUMULATOR STA 184 PORT SIDE)	001-210	1
	13A-71831-19	•LINE ASSY - NORMAL SURFACE CTL PRESSURE (TEE STA 186 STBD TO PRESSURE PORT OF ACCUMULATOR STA 184 PORT SIDE)	211-	1
	AN742D10C	•CLAMP -		2
	AN520-10R8	•SCREW -		2

FIGURE AND INDEX NUMBER	GROUP HYDRAULIC EQUIPMENT MAJOR ASSEMBLY FUSELAGE STA 178-236 NORMAL HYDRAULIC EQUIPMENT PART NUMBER	1234567 NOMENCLATURE	CODE	UNITS PER ASSY
198 -	AN365-1032	•NUT -		2
-29	325-625-3•813-S	•CLAMP - T-BOLT STAINLESS STEEL (MPC)	001-300	1
	325-63-381-SH	•CLAMP - T-BOLT STAINLESS STEEL (MPC)	301-	1
	325-625- 375-S	•CLAMP - T-BOLT STAINLESS STEEL (MPC)	001-300	1
	325-63-375-SH	•CLAMP - T-BOLT STAINLESS STEEL (MPC)	301-	1
-30	13A-71811-3	•LINE ASSY - NORMAL SUR CTL RETURN (ACCUM TO TEE STA 188 PORT SIDE)	001-370	1
	13A-71811-13	•LINE ASSY - NORMAL SUR CTL RETURN (ACCUM TO TEE STA 188 PORT SIDE)	371-	1
-31	AN815-6D	•UNION -	001-370	1
	AN815-6	•UNION - (AS PER EO 05-5E-6B/13)	371-	1
-32	13A-71821-7	•LINE ASSY - NORMAL SUR CTL PRESSURE (FOR STAB• UNION STA 189 STBD TO DISC• STA 219) (AS PER EO 05-5E-6B/13)	001-370	1
	13A-71821-1007	•LINE ASSY - NORMAL SUR CTL PRESSURE (FOR STAB• UNION STA 189 STBD TO DISC• STA 219) (AS PER EO 05-5E-6B/13)	371-	1
	AN742D8C	•CLAMP -		2
	AN520-10R8	•SCREW -		2
	AN365-1032	•NUT -		2
-33	AN742D8C	•CLAMP - (AS PER EO 05-5E-6A/19)		1
	AN520-10R10	•SCREW - (AS PER EO 05-5E-6A/19)		1
	AN960D10	•WASHER - (AS PER EO 05-5E-6A/19)		1
	AN365-1032	•NUT - (AS PER EO 05-5E-6A/19)		1
-34	155-S2-6D	•COUPLING HALF - HOSE SELF-SEALING (AQC) (STARBOARD SIDE)	001-370	1
	155-S2-6S	•COUPLING HALF - HOSE SELF-SEALING (AQC) (STBD SIDE) (AS PER EO 05-5E-6B/13)	371-	1
	AN924-6D	•NUT -		1
-35	155-S2-6D	•COUPLING HALF - HOSE SELF-SEALING (AQC) (STARBOARD SIDE)	001-370	1
	155-S2-6S	•COUPLING HALF - HOSE SELF-SEALING (AQC) (STBD SIDE) (AS PER EO 05-5E-6B/13)	371-	1
	AN924-6D	•NUT -		1
-36	13A-71821-9	•LINE ASSY - NORMAL SURFACE CTL RET (STAB• DISC• STA 215 TO TEE STA 185 STBD)	001-370	1
	13A-71821-1009	•LINE ASSY - NORMAL SURFACE CTL RET (STAB• DISC• STA 215 TO TEE STA 185 STBD) (AS PER EO 05-5E-6B/13)	371-	1
	AN742D8C	•CLAMP -		1
	AN520-10R8	•SCREW -		1
	AN365-1032	•NUT -		1
-37	AN926-6D	•TEE -		1
	AN815-6D	•UNION -	001-370	2
	AN815-6	•UNION - (AS PER EO 05-5E-6B/13)	371-	2
	AN919-12D	•REDUCER -		1
-38	13A-71831-7	•LINE ASSY - NORMAL SURFACE CONTROL RETURN (TEE STA 185 RH TO UNION STA 180 RH)		1
-39	AN815-8D	•UNION -		1
-40	13A-71831-13	•LINE ASSY - NORMAL SURFACE CONTROL RETURN (UNION STA 180 STBD TO FORWARD PORT OF ACCUMULATOR STA 182 PORT SIDE)		1
-41	AN3-13A	•BOLT -		2
	AN960D10	•WASHER -		2
-42	191-58811-7	•LINE ASSY - AIR-PRESSURE (FILTER TO TEE STA 205 PORT SIDE)		1
-43	AN804D4	•TEE - (AS PER EO 05-5E-6A/61)		1
	AN960D716	•WASHER -		1
	AN924-4D	•NUT -		1
-44	13A-71812-31	•LINE ASSY - AIR-PRESSURE (BULKHEAD STA 205 PORT SIDE TO AIR-PURGE SIGHT GAUGE) (AS PER EO 05-5E-6A/61)		1

FIGURE AND INDEX NUMBER	GROUP HYDRAULIC EQUIPMENT MAJOR ASSEMBLY FUSELAGE STA 178-236 NORMAL HYDRAULIC EQUIPMENT PART NUMBER	1234567 NOMENCLATURE	CODE	UNITS PER ASSY
198 -45	MS21919DG6	•CLAMP - AIRCRAFT LOOP TYPE SUP• CUSHIONED (AS PER EO 05-5E-6A/61)		1
	MS21919DG4	•CLAMP - AIRCRAFT LOOP TYPE SUP• CUSHIONED (AS PER EO 05-5E-6A/61)		1
	AN520-10R8	•SCREW -		1
	AN365-1032	•NUT -		1
-46	AN3-3A	•BOLT -		4
-47	13A-71811-7	•LINE ASSY - NORMAL SUR CTL A/PRESS (PORT FLOOR BHD STA 209 TO ACCUMULATOR)	001-210	1
	13A-71811-9	•LINE ASSY - NORMAL SUR CTL A/PRESS (PORT FLOOR BHD STA 209 TO ACCUMULATOR)	211-	1
-48	AN742D6C	•CLAMP -		2
	NAS43DD3-48	•SPACER -		2
	AN520-10R20	•SCREW -		2
	AN365-1032	•NUT -		2
-49	3H3-6-0283	HOSE ASSY - PLASTIC COVERED (NAA) (SEE FIG• 208)		REF
-50	AN6292-6-27	HOSE ASSY - HYD & PNEU HIGH PRESSURE SWIVEL CONNECTING (SEE FIG• 208)		REF
-51	13A-71827-3	LINE ASSY - NORMAL SURFACE CONTROL RETURN (SEE FIG• 193)		REF
-52	191-58805-25	LINE ASSY - NORMAL SURFACE CONTROL PRESSURE (SEE FIG• 193)		REF
		(CONTINUED SEE FIG• 199)		

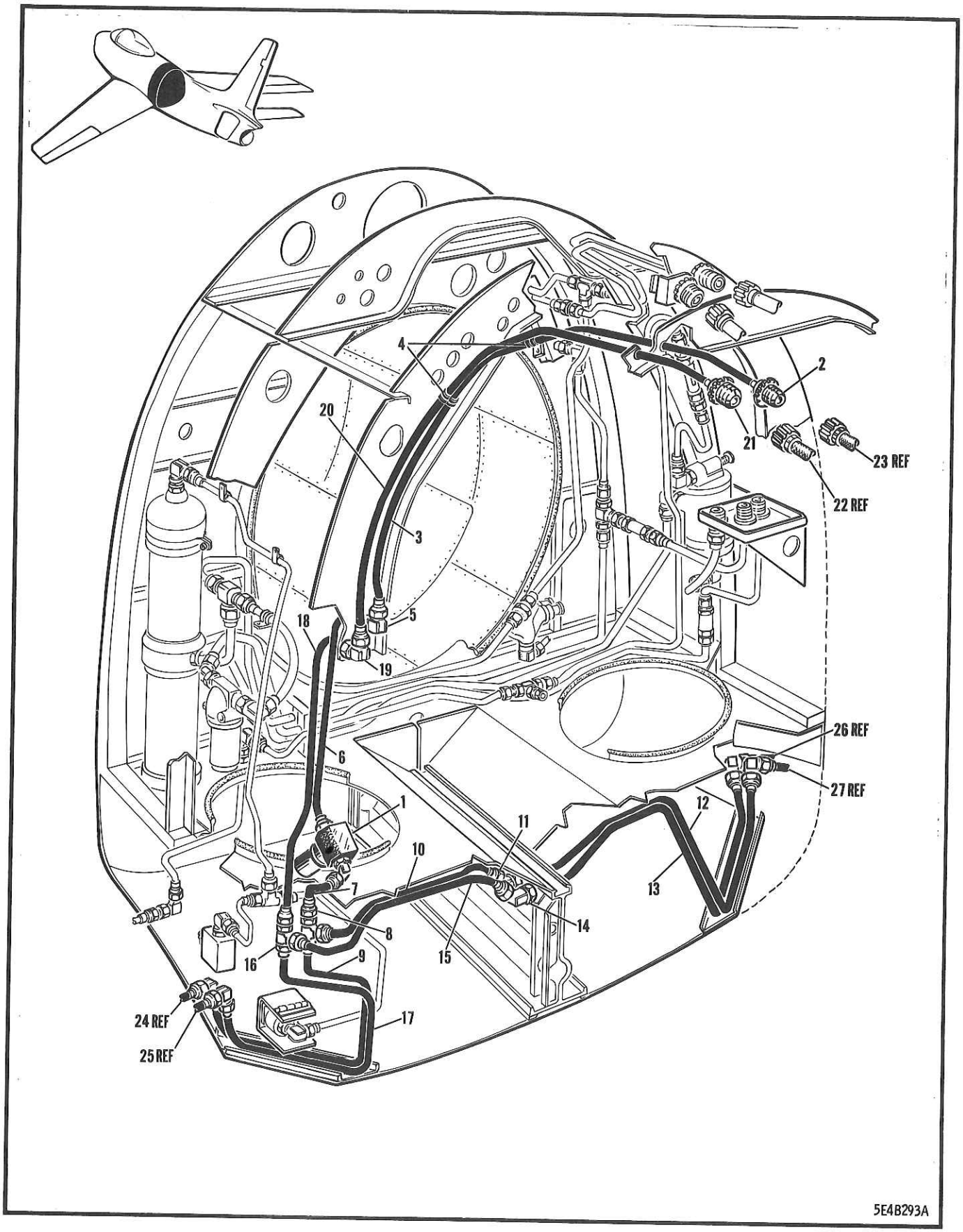

FIGURE 199 FUSELAGE STA 178-236 ALTERNATE HYDRAULIC EQUIPMENT

FIGURE AND INDEX NUMBER	GROUP HYDRAULIC EQUIPMENT MAJOR ASSEMBLY FUSELAGE STA 178-236 ALTERNATE HYDRAULIC PART NUMBER	1234567 NOMENCLATURE	CODE	UNITS PER ASSY
199 -	13A-71064	HYDRAULIC EQUIP. INSTL - FUS STA 178-236 (SEE FIG. 195)		REF
		•FILTER ASSY - HYDRAULIC ALTR SUR CONTROL 6-TUBE SIZE (PORT SIDE) (SEE FIG. 230)		REF
- 1	13A-71304	•BOLT - (FILTER ATTACHING)		2
	AN4-20A	•COUPLING HALF - HOSE SELF-SEALING (AQC) (STARBOARD SIDE)	001-370	1
- 2	155-S2-6D	•COUPLING HALF - HOSE SELF-SEALING (AQC) (STBD SIDE) (AS PER EO 05-5E-6B/13)	371-	1
	155-S2-6S	•NUT -		1
	AN924-6D	•LINE ASSY - ALTERNATE SUR CTL PRESS. DISC. STA 221 LH TO BHD ELBOW STA 204 LH	001-370	1
- 3	13A-71812-29	•LINE ASSY - ALTERNATE SUR CTL PRESS. DISC. STA 221 LH TO BHD ELBOW STA 204 LH (AS PER EO 05-5E-6B/13)	371-	1
	13A-71812-1029	•CLAMP -		3
	AN742D8C	•SCREW -		2
- 4	AN520-10R8	•NUT -		2
	AN365-1032	•ELBOW - (PORT SIDE)	001-370	1
- 5	AN833-6D	•ELBOW - (PORT SIDE)(AS PER EO 05-5E-6B/13)	371-	1
	AN833-6	•NUT -		1
	AN924-6D	•LINE ASSY - ALTERNATE SURFACE CTL PRESSURE (BULKHEAD ELBOW STA 204 PORT TO FLT)	001-370	1
- 6	13A-71812-5	•LINE ASSY - ALTERNATE SURFACE CTL PRESSURE (BULKHEAD ELBOW STA 204 PORT SIDE TO FILTER) (AS PER EO 05-5E-6B/13)	371-	1
	13A-71812-1005	•LINE ASSY - ALTERNATE SURFACE CTL PRESSURE (ELBOW ON FILTER TO BULKHEAD TEE STA 205 PORT SIDE)	001-370	1
- 7	13A-71812-7	•LINE ASSY - ALTERNATE SURFACE CTL PRESSURE (FILTER TO TEE STA 205 PORT SIDE) (AS PER EO 05-5E-6B/13)	371-	1
	13A-71812-1007	•TEE - (PORT SIDE)	001-370	1
	AN804D6	•TEE - (PORT SIDE) (AS PER EO 05-5E-6B/13)	371-	1
- 8	AN804-6	•WASHER -		1
	AN960PD916	•NUT -		1
	AN924-6	•LINE ASSY - ALTERNATE SURFACE CTL PRESSURE (TEE STA 205 IN PORT WHEEL WELL TO ELBOW STA 198 ON PORT WING PANEL)	001-370	1
- 9	13A-71812-9	•LINE ASSY - ALTERNATE SURFACE CTL PRESSURE (TEE STA 205 IN PORT WHEEL WELL TO ELBOW STA 198 ON PORT WING PANEL) (AS PER EO 05-5E-6B/13)	371-	1
	13A-71812-1009	•LINE ASSY - ALTERNATE SURFACE CTL PRESSURE (BULKHEAD TEE STA 205 IN PORT WHEEL WELL TO BULKHEAD UNION STA 206)	001-210	1
-10	13A-71812-11	•LINE ASSY - ALTERNATE SURFACE CTL PRESSURE (BULKHEAD TEE STA 205 IN PORT WHEEL WELL TO BULKHEAD UNION STA 206)	211-370	1
	13A-71812-25	•LINE ASSY - ALTERNATE SURFACE CTL PRESSURE (BULKHEAD TEE STA 205 IN PORT WHEEL WELL TO BULKHEAD UNION STA 206) (AS PER EO 05-5E-6B/13)	371-	1
	13A-71812-1025	•ELBOW - (PORT SIDE)	001-370	1
		•ELBOW - (PORT SIDE)(AS PER EO 05-5E-6B/13)	371-	1
-11	AN837-6D	•WASHER -		1
	AN837-6	•NUT -		1
	AN960PD916	•LINE ASSY - ALTERNATE SURFACE CTL PRESSURE (UNION STA 206 STBD WHEEL WELL TO STARBOARD WING BULKHEAD STA 205)	001-210	1
	AN924-6D			
-12	13A-71812-13			

FIGURE AND INDEX NUMBER	GROUP HYDRAULIC EQUIPMENT MAJOR ASSEMBLY FUSELAGE STA 178-236 ALTERNATE HYDRAULIC PART NUMBER	1234567 NOMENCLATURE	CODE	UNITS PER ASSY
199 -	13A-71812-27	•LINE ASSY - ALTERNATE SURFACE CTL PRESSURE (UNION STA 206 STBD WHEEL WELL TO STARBOARD BULKHEAD STA 205)	211-370	1
	13A-71812-1027	•LINE ASSY - ALTERNATE SURFACE CTL PRESSURE (UNION STA 206 STBD WHL/W TO STBD WING BHD STA 205) (EO 05-5E-6B/13)	371-	1
	AN742D8C	•CLAMP -		3
	AN520-10R8	•SCREW -		1
	AN365-1032	•NUT -		1
-13	13A-71812-15	•LINE ASSY - ALTERNATE SUR CTL RETURN (STBD WING BHD STA 205 TO BHD FTG STA 206)	001-370	1
	13A-71812-1015	•LINE ASSY - ALTERNATE SUR CTL RETURN (STBD WING BHD STA 205 TO BHD FTG STA 206) (AS PER EO 05-5E-6B/13)	371-	1
	AN742D8C	•CLAMP -		3
	AN520-10R8	•SCREW -		3
	AN365-1032	•NUT -		3
-14	AN837-6D	•ELBOW - (PORT SIDE)	001-370	1
	AN837-6	•ELBOW - (PORT SIDE)(AS PER EO 05-5E-6B/13)	371-	1
	AN960PD916	•WASHER -		1
	AN924-6D	•NUT -		1
-15	13A-71812-17	•LINE ASSY - ALTERNATE SURFACE CTL RETURN (BHD FITTING IN PORT WHEEL WELL STA 206 TO BULKHEAD TEE STA 205 PORT)	001-370	1
	13A-71812-1017	•LINE ASSY - ALTERNATE SURFACE CTL RETURN (BHD FITTING IN PORT WHEEL WELL STA 206 TO BULKHEAD TEE STA 205 PORT) (AS PER EO 05-5E-6B/13)	371-	1
	AN804D6	•TEE - (PORT SIDE)		1
	AN804-6	•TEE - (PORT SIDE) (AS PER 05-5E-6B/13)	001-370	1
	AN960PD916	•WASHER -	371-	1
	AN924-6	•NUT -		1
-16	13A-71812-19	•LINE ASSY - ALTERNATE SUR CTL RETURN (PORT WING BULKHEAD ELBOW STA 199 TO BHD TEE STA 205 PORT SIDE)	001-370	1
	13A-71812-1019	•LINE ASSY - ALTERNATE SUR CTL RETURN (PORT WING BHD ELBOW STA 199 TO TEE STA 205 PORT) (AS PER EO 05-5E-6B/13)	371-	1
	AN742D8C	•CLAMP -		4
	AN520-10R8	•SCREW -		2
	AN365-1032	•NUT -		2
-17	13A-71812-21	•LINE ASSY - ALTERNATE SURFACE CTL RETURN (TEE FLOOR PORT SIDE STA 205 TO BULKHEAD ELBOW STA 205)	001-429	1
	13A-71812-1021	•LINE ASSY - ALTERNATE SUR CTL RETURN (TEE FLOOR PORT SIDE STA 205 TO BULKHEAD ELBOW STA 205) (PER EO 05-5E-6B/13)	371-	1
	AN833-6D	•ELBOW - (PORT SIDE)		
	AN833-6	•ELBOW - (PORT SIDE)(AS PER EO 05-5E-6B/13)	001-370	1
	AN924-6D	•NUT -	371-	1
-18	13A-71812-23	•LINE ASSY - ALTERNATE SURFACE CTL RETURN (BHD ELL• STA 205 TO REAR DISCONNECT STA 219 PORT SIDE)	001-370	1
	13A-71812-1023	•LINE ASSY - ALTERNATE SURFACE CTL RETURN (BHD ELL• STA 205 TO REAR DISCONNECT STA 219 LH) (AS PER EO 05-5E-6B/13)	371-	1
-19	155-S2-6D	•COUPLING HALF - HOSE SELF-SEALING (AQC) (STARBOARD SIDE)	001-370	1
	155-S2-6S	•COUPLING HALF - HOSE SELF-SEALING (AQC) (STBD SIDE) (AS PER EO 05-5E-6B/13)	371-	1
-20				
-21				

FIGURE AND INDEX NUMBER	GROUP HYDRAULIC EQUIPMENT MAJOR ASSEMBLY FUSELAGE STA 178-236 ALTERNATE HYDRAULIC PART NUMBER	1234567 NOMENCLATURE	CODE	UNITS PER ASSY
199 -	AN924-6D	•NUT -		1
-22	3H3-6-0157	HOSE ASSY - PLASTIC COVERED (NAA) (ALTERNATE RETURN) (SEE FIG. 209)		REF
-23	AN6292-6-14-5/8	HOSE ASSY - HYD & PNEU HIGH PRESSURE SWIVEL (ALTERNATE PRESSURE) (SEE FIG. 209)		REF
-24	191-58807-29	LINE ASSY - ALTERNATE SURFACE CTL PRESSURE (SEE FIG. 203)		REF
-25	191-58807-25	LINE ASSY - ALTERNATE SURFACE CONTROL RET (SEE FIG. 203)		REF
-26	191-58807-31	LINE ASSY - ALTERNATE SURFACE CTL PRESSURE (SEE FIG. 205)		REF
-27	191-58807-27	LINE ASSY - ALTERNATE SURFACE CONTROL RET (SEE FIG. 205)		REF
		-000-		

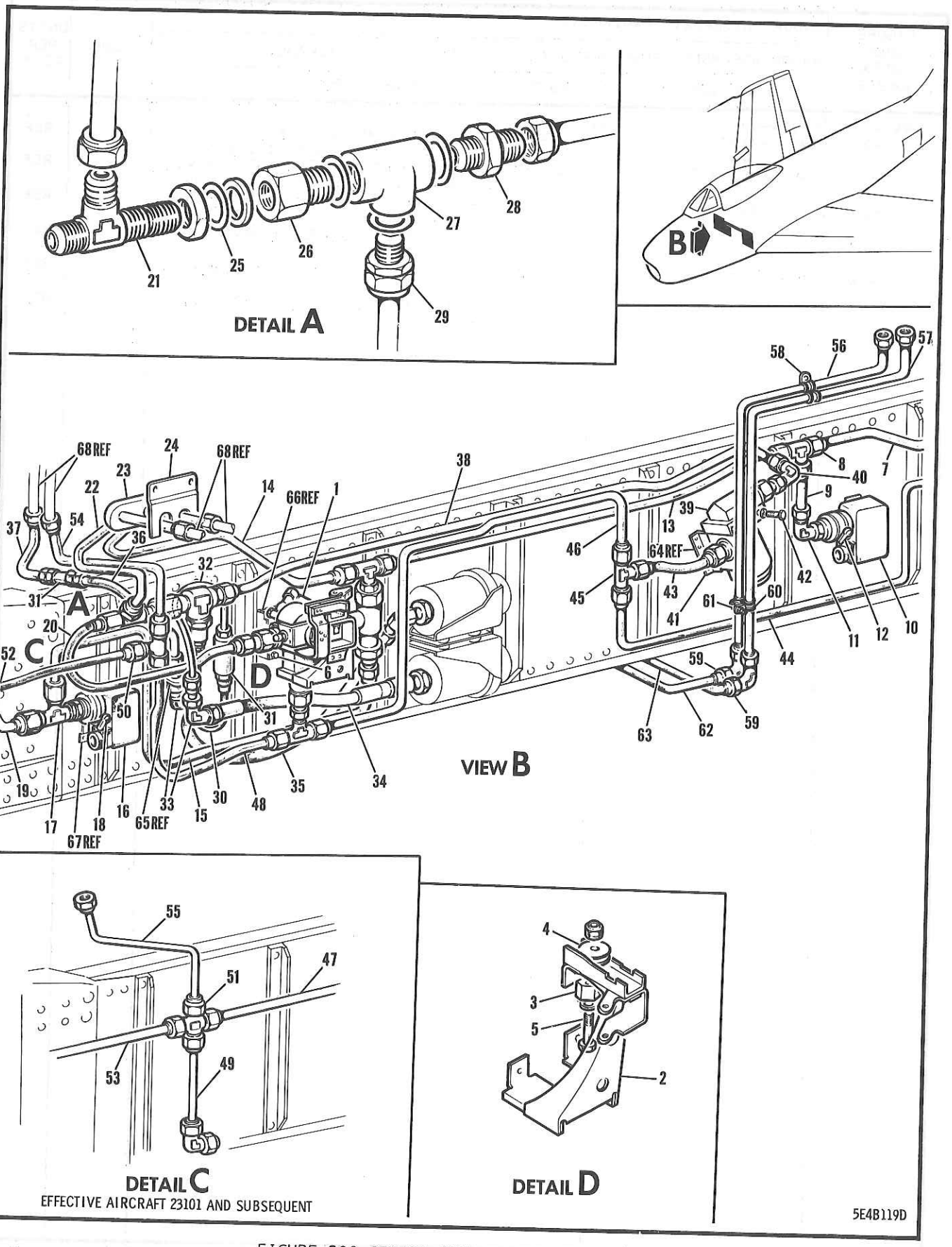

FIGURE 200 CENTRE WING HYDRAULIC EQUIPMENT

FIGURE AND INDEX NUMBER	GROUP HYDRAULIC EQUIPMENT MAJOR ASSEMBLY CENTRE WING HYDRAULIC EQUIPMENT PART NUMBER	1234567 NOMENCLATURE	CODE	UNITS PER ASSY
200 -	172-58066-800	HYDRAULIC EQUIP. INSTL - WING CTR/SECT (SEE SECTION 1)	001-100	NP
	172-58066-801	HYDRAULIC EQUIP. INSTL - WING CTR/SECT	101-	NP REF
- 1	13A-71309	•VALVE ASSY - NORMAL SURFACE CTL BY-PASS (SEE FIG. 231)	001-210	1
	172-52047-13	•BRACKET ASSY - SURFACE CTL MAN. EMERGENCY CHANGE-OVER	001-210	1
- 2	165-52041-29	••BRACKET ASSY - SURFACE CTL MAN. EMERGENCY CHANGE-OVER	001-210	1
- 3	172-52088	••SUPPORT - SURFACE CTL MAN. EMY CH/OV CAM	001-210	1
- 4	FL3C3	••BALL-BEARING - DEEP GROOVE METAL SHIELDED (FBC)	001-210	1
- 5	AN3-14A	••BOLT -	001-210	3
	AN960-10L	••WASHER -	001-210	2
	AN960-10	••WASHER -	001-210	2
	AN365-1032	••NUT -	211-	3
	AN960D416	•WASHER -		3
- 6	AN4-7A	•BOLT -		3
	AN960D416	•WASHER -		
- 7	13A-71871-9	•LINE ASSY - NORMAL SURFACE CTL PRESSURE (TEE TO UNION PORT SIDE)	001-370	1
	13A-71871-1009	•LINE ASSY - NORMAL SURFACE CTL PRESSURE (TEE TO UNION PORT SIDE) (AS PER EO 05-5E-6B/13)	371-	1
- 8	AN824-6D	•TEE -	001-370	1
	AN824-6	•TEE - (AS PER EO 05-5E-6B/13)	371-	1
- 9	13A-71871-7	•LINE ASSY - NORMAL SURFACE CTL PRESSURE (ELBOW TO TEE)	001-370	1
	13A-71871-1007	•LINE ASSY - NORMAL SURFACE CTL PRESSURE (ELL. TO TEE)(AS PER EO 05-5E-6B/13)	371-	1
	172-58615-951	•SWITCH ASSY - HYDRAULIC SUR CTL SYS PRESS.	001-490	1
-10	29100-2	••SWITCH - HYDRAULIC PRESSURE (HRM)	491-	1
	90100-2	••SWITCH - (HRM) (HYDRAULIC PRESSURE) OR ••SWITCH - HYDRAULIC PRESSURE (FBK)		1
	4000-26	••GASKET -		1
	AN6290-6	••RING -		1
	AN6291-6	••NUT -		1
	AN6289D6	••ELBOW -		1
-11	AN833-6D	•LUG - SAFETY (NAA)		2
-12	2L7-2	•BOLT -		2
	AN3-20A	•WASHER -		1
	AN960D10	•LINE ASSY - NORMAL SURFACE CTL PRESSURE (TEE TO TEE)	001-100	1
-13	13A-71871-5	•LINE ASSY - NORMAL SURFACE CTL PRESSURE (TEE TO TEE)	101-370	1
	13A-71871-29	•LINE ASSY - NORMAL SURFACE CTL PRESSURE (TEE TO TEE) (AS PER EO 05-5E-6B/13)	371-	1
	13A-71871-1029	•CLAMP -		3
	AN742D6	•BOLT -		1
	AN3-13A	•SPACER -		1
	NAS43DD3-48	•LINE ASSY - NORMAL SURFACE CTL PRESSURE (TEE TO GUN-BAY FLOOR)	001-100	1
-14	191-58813-3	•LINE ASSY - NORMAL SUR CTL PRESSURE VALVE (TEE TO STABILIZER ACTUATOR)	101-370	1
	13A-71871-31	•LINE ASSY - NORMAL SUR CTL PRESSURE VALVE (TEE TO STABILIZER ACTUATOR) (AS PER EO 05-5E-6B/13)	371-	1
	13A-71871-1031	•LINE ASSY - NORMAL SUR CTL PRESSURE VALVE (TEE TO TEE)	001-370	1
-15	13A-71871-3			

FIGURE AND INDEX NUMBER	GROUP HYDRAULIC EQUIPMENT MAJOR ASSEMBLY CENTRE WING HYDRAULIC EQUIPMENT PART NUMBER	1234567 NOMENCLATURE	CODE	UNITS PER ASSY
200 -	13A-71871-1003	•LINE ASSY - NORMAL SUR CTL PRESSURE VALVE (TEE TO TEE) (AS PER EO 05-5E-6B/13)	371-	1
-16	172-58615-950	•SWITCH ASSY - HYDRAULIC SUR CTL SYS PRESS.		
	29100-2	••SWITCH - HYDRAULIC PRESSURE (HRM)		1
	90100-2	••SWITCH - (HRM) (HYDRAULIC PRESSURE)	001-490	1
		OR	491-	1
	4000-26	••SWITCH - HYDRAULIC PRESSURE (FBK)		
	AN6290-6	••GASKET -		
	AN6291-6	••RING -		
	AN6289D6	••NUT -		1
-17	AN804D6	••TEE -		1
-18	2L7-2	•LUG - SAFETY (NAA)		1
	AN3-22A	•BOLT -		1
	NAS43DD3-16	•SPACER -		1
	AN960D10	•WASHER -		2
-19	13A-71871-11	•LINE ASSY - NORMAL SURFACE CTL PRESSURE (TEE TO UNION STARBOARD SIDE)		2
	13A-71871-1011	•LINE ASSY - NORMAL SURFACE CTL PRESSURE (TEE TO UNION STARBOARD SIDE) (AS PER EO 05-5E-6B/13)	001-370	1
-20	191-58813-5	•LINE ASSY - NORMAL SUR CONTROL PRESSURE (UNION TO TEE)	371-	1
-21	AN804D8	•TEE -		1
-22	191-58813-9	•LINE ASSY - NORMAL SURFACE CTL PRESSURE (TEE TO GUN-BAY FLOOR)		1
	13-71060	•BAFFLE-PLATE - HYDRAULIC EQUIPMENT WING CENTRE SECTION		1
-23	172-58066-951	•SEAL ASSY - HYD EQUIP. W/CTR/SECT	001-050	2
-24	172-58066-957	•RETAINER - SEAL (WING CENTRE SECTION)		
	AN525-10R6	•SCREW -	051-	1
	AN515-8R8	•SCREW -	051-	1
	AN960D10L	•WASHER -	001-050	2
	AN960D8L	•WASHER -	051-	2
	AN365-1032	•NUT -	001-050	2
	755-8-2-8	•CLIP - INTEGRALLY BONDED SUPPORT (ADE)	051-	2
	755-6-2-8	•CLIP - INTEGRALLY BONDED SUPPORT (ADE)	001-050	2
	AN520-10R6	•SCREW -	001-050	1
	AN960D10L	•WASHER -	001-050	1
	AN365-1032	•NUT -	001-050	1
-25	AN6290-8	•GASKET -	001-050	1
	AN6291-8	•RING -	001-050	1
	AN6289-8	•NUT -		1
	AN6289D8	•NUT -		1
-26	AN894D8-6	•BUSHING -	001-100	1
	AN6290-6	•GASKET -	101-	1
-27	AN938D6	•TEE -		1
-28	AN815-6D	•UNION -		3
	AN815-6	•UNION - (AS PER EO 05-5E-6B/13)	001-370	1
-29	AN919-6D	•REDUCER -	371-	1
-30	191-58813-13	•LINE ASSY - NORMAL SUR CTL XMTR PRESSURE (SNUBBER TO FEMALE TEE)	001-100	1
	13A-71871-25	•LINE ASSY - NORMAL SURFACE CTL PRESS. (TEE TO SNUBBER)	101-	1
-31	114162	•SNUBBER - (OMS) (RAY PRESSURE MODEL 11D-2)		
		OR		2
	25S-2	•SNUBBER - (OMS)		
		OR		
	25S-2A	•SNUBBER - (OMS)		
-32	191-58813-11	•LINE ASSY - NORMAL SURFACE CTL XMTR PRESS. (SNUBBER TO ELBOW)	001-100	1

FIGURE AND INDEX NUMBER	GROUP HYDRAULIC EQUIPMENT MAJOR ASSEMBLY CENTRE WING HYDRAULIC EQUIPMENT PART NUMBER	1234567 NOMENCLATURE	CODE	UNITS PER ASSY
200 -	13A-71871-27	•LINE ASSY - NORMAL SURFACE CTL PRESSURE (SNUBBER TO ELBOW)	101-	1
-33	AN833-4D	•ELBOW -		2
	AN6290-4	•GASKET -		2
	AN6289-4	•NUT -		2
-34	MS28741-4-0110	•HOSE ASSY - DETACHABLE END FITTING		1
-35	MS28741-4-0170	•HOSE ASSY - DETACHABLE END FITTING		1
-36	191-58813-15	•LINE ASSY - UTILITY SYS TRANSMITTER PRESS• (ELBOW TO PRESSURE SNUBBER)		1
-37	191-58813-17	•LINE ASSY - UTILITY SYS XMTR PRESSURE (SNUBBER TO GUN-BAY FLOOR)		1
-38	191-58813-7	•LINE ASSY - NORMAL SURFACE CTL PRESSURE (UNION TO RELIEF-VALVE)	001-370	1
	191-58813-1007	•LINE ASSY - NORMAL SUR CTL PRESS•(UNION TO RELIEF-VALVE)(AS PER EO 05-5E-6B/13)	371-	1
	172-58603-5	•RELIEF-VALVE ASSY - HYDRAULIC SUR CONTROL	001-370	1
	172-58603-805	•RELIEF-VALVE ASSY - HYDRAULIC SUR CONTROL (AS PER EO 05-5E-6B/13)	371-	1
-39	AN6279-6CD	••RELIEF-VALVE - HYDRAULIC PRESSURE		1
-40	AN833-6D	••ELBOW -	001-370	1
	AN833-6	••ELBOW -	371-	1
	AN6290-6	••GASKET -		1
	AN6291-6	••RING -		1
	AN6289-6	••NUT -		1
-41	AN815-6D	••UNION -	001-370	1
	AN815-6	••UNION -	371-	1
	AN6290-6	••GASKET -		1
-42	AN3-22A	•BOLT -		3
	AN960D10	•WASHER -		3
-43	172-58801-25	•LINE ASSY - POWER CTL RETURN (TEE TO RV)	001-370	1
	172-58801-1025	•LINE ASSY - POWER CONTROL RETURN (TEE TO RELIEF-VALVE)(AS PER EO 05-5E-6B/13)	371-	1
-44	172-58801-27	•LINE ASSY - POWER CONTROL RETURN (TEE TO UNION WING STA 32)	001-370	1
	172-58801-1027	•LINE ASSY - POWER CTL RETURN (TEE TO UNION WING STA 32) (AS PER EO 05-5E-6B/13)	371-	1
	AN742D6	•CLAMP -		2
	AN520-10R8	•SCREW -		2
	AN365-1032	•NUT -		2
-45	AN824-6D	•TEE -	001-370	1
	AN824-6	•TEE - (AS PER EO 05-5E-6B/13)	371-	1
-46	13A-71871-15	•LINE ASSY - NORMAL SUR CTL RETURN (TEE TO 3-WAY VALVE)	001-100	1
-47	13A-71871-17	•LINE ASSY - NORMAL SURFACE CONTROL RETURN (RELIEF-VALVE TEE TO CROSS)	101-370	1
	13A-71871-1017	•LINE ASSY - NORMAL SUR CTL RETURN (RV TEE TO CROSS) (AS PER EO 05-5E-6B/13)	371-	1
	AN742D6	•CLAMP -		4
	AN520-10R8	•SCREW -		2
	AN365-1032	•NUT -		2
-48	13A-71871-13	•LINE ASSY - NORMAL SUR CTL RETURN (3-WAY VALVE TO TEE)	001-100	1
-49	13A-71871-19	•LINE ASSY - NORMAL SUR CTL BY-PASS RETURN (TRANSFER VALVE TO CROSS)	101-370	1
	13A-71871-1019	•LINE ASSY - NORMAL SUR CTL BY-PASS RETURN (TRANSFER VALVE TO CROSS) (AS PER EO 05-5E-6B/13)	371-	1
-50	AN824-6D	•TEE -	001-100	1
-51	AN827-6D	•CROSS -	101-370	1
	AN827-6	•CROSS - (AS PER EO 05-5E-6B/13)	371-	1

FIGURE AND INDEX NUMBER	GROUP HYDRAULIC EQUIPMENT MAJOR ASSEMBLY CENTRE WING HYDRAULIC EQUIPMENT PART NUMBER	1234567 NOMENCLATURE	CODE	UNITS PER ASSY
200 -52	172-58801-9	•LINE ASSY - POWER CTL RETURN(TEE TO UNION)	001-100	1
-53	13A-71871-21	•LINE ASSY - NORMAL SURFACE CONTROL RETURN (CROSS TO STARBOARD WING)	101-370	1
	13A-71871-1021	•LINE ASSY - NORMAL SUR CTL RETURN (CROSS TO STBD WING)(AS PER EO 05-5E-6B/13)	371-	1
-54	172-58801-3	•LINE ASSY - POWER CONTROL RETURN (TEE TO GUN-BAY FLOOR)	001-100	1
-55	13A-71871-23	•LINE ASSY - NORMAL SURFACE CONTROL RETURN (CROSS TO GUN-BAY FLOOR)	101-370	1
	13A-71871-1023	•LINE ASSY - NORMAL SURFACE CONTROL RETURN (CROSS TO GUN-BAY FLOOR) (AS PER EO 05-5E-6B/13)	371-	1
-56	170-58803-3	•LINE ASSY - PORT BRAKE PRESSURE (GUN-BAY FLOOR TO ELBOW)		1
-57	170-58803-5	•LINE ASSY - STBD BRAKE PRESSURE (GUN-BAY FLOOR TO ELBOW)		1
-58	AN742D4	•CLAMP -		2
	AN520-10R8	•SCREW -		1
	AN365-1032	•NUT -		1
-59	AN821-4D	•ELBOW -		2
-60	AN742D4	•CLAMP -		2
	AN520-10R12	•SCREW -		1
-61	NAS43DD3-16	•SPACER -		1
	AN365-1032	•NUT -		1
-62	170-58803-7	•LINE ASSY - PORT BRAKE PRESSURE (ELBOW TO UNION FUS STA 135)		1
-63	170-58803-9	•LINE ASSY - STBD BRAKE PRESSURE (ELBOW TO UNION FUS STA 135)		1
-64	172-58110	BRACKET ASSY - HYDRAULIC SURFACE CONTROL RV (SEE SECTION 1)		REF
-65	172-58102	SUPPORT - HYDRAULIC POWER CONTROL PRESSURE XMTR HOSE (SEE SECTION 1)		REF
-66	172-58101	BRACKET ASSY - HYDRAULIC POWER CONTROL BY-PASS VALVE (SEE SECTION 1)		REF
-67	170-58118	BRACKET ASSY - HYDRAULIC BY-PASS PRESSURE SWITCH SUPPORT (SEE SECTION 1)		REF
-68	CROSS REFERENCE	LINE ASSY - (SEE FIG. 192)		REF

-000-

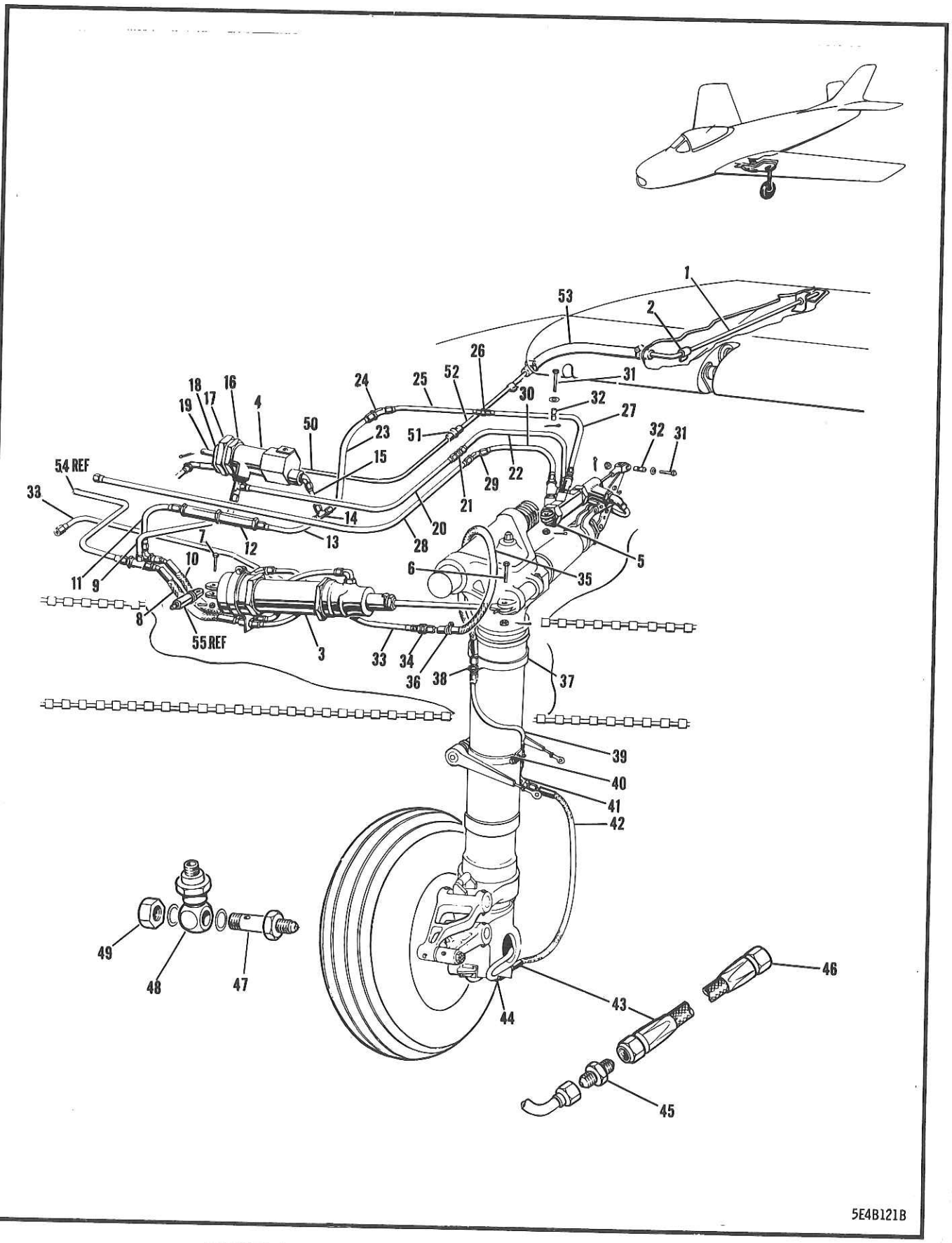

FIGURE 201 MAIN GEAR & FLAP HYDRAULIC EQUIPMENT

FIGURE AND INDEX NUMBER	GROUP HYDRAULIC EQUIPMENT MAJOR ASSEMBLY MAIN GEAR & FLAP HYDRAULIC EQUIPMENT PART NUMBER	1234567 NOMENCLATURE	CODE	UNITS PER ASSY
201 -	177-18001-101	FLAP ASSY - PORT WING COMPLETE (SEE SECTION 1)		REF
- 1	140-53124	•TUBE - FLAP STA 29 PILOT RELIEF (RESERVOIR VENT) (PORT WING)		1
- 2	791-E-6	•CLIP - SWIVEL MOUNTING LUG SUPPORT (ADE) (PORT WING)	001-100	1
	NAS221-10	•SCREW - (PORT WING)	101-	1
	AN3-4A	•BOLT - (PORT WING)		1
	AN931-6-10	•GROMMET - (PORT WING)	001-610	NP
	170-58063-801	HYDRAULIC EQUIP. INSTL - PORT WING (SEE SECTION 1)	611-	NP
	170-58063-803	HYDRAULIC EQUIP. INSTL - PORT WING	001-610	NP
	170-58063-802	HYDRAULIC EQUIP. INSTL - STARBOARD WING (SEE SECTION 1)	611-	NP
	170-58063-804	HYDRAULIC EQUIP. INSTL - STARBOARD WING		REF
- 3	151-58627-3	•CYLINDER ASSY - HYDRAULIC M/LDG/GR OPERATING PORT WING (SEE FIG. 232)		REF
	151-58627-4	•CYLINDER ASSY - HYDRAULIC M/LDG/GR OPERATING STBD WING (SEE FIG. 232)		REF
- 4	151-58629-1	•CYLINDER ASSY - HYDRAULIC M/LDG/GR UPLOCK RELEASE (PORT WING) (SEE FIG. 201)		REF
	151-58629-2	•CYLINDER ASSY - HYDRAULIC M/LDG/GR UPLOCK RELEASE (STBD WING) (SEE FIG. 233)		REF
- 5	151-58628-5	•CYLINDER ASSY - HYDRAULIC M/LDG/GR DOWNLOCK (PORT WING) (SEE FIG. 234)		REF
	151-58628-8	•CYLINDER ASSY - HYDRAULIC MAIN LDG/GR DOWNLOCK (STBD WING) (SEE FIG. 234)	001-100	1
- 6	AN7-14	•BOLT - (MAIN GEAR OPERATING CYLINDER TO STRUT PIVOT PIN ATTACHMENT)	101-	1
	NAS464-7-14	•BOLT - (MAIN GEAR OPERATING CYLINDER TO STRUT PIVOT PIN ATTACHMENT)	101-	1
	AN960-716	•WASHER -	001-100	1
	AN310-7	•NUT -	101-	1
	AN320-7	•NUT -		1
	AN380-3-3	•COTTER-PIN -		1
- 7	AN7-15	•BOLT - (MAIN GEAR OPERATING CYLINDER TO PIN ATTACHING)		1
	AN310-7	•NUT -		1
	AN380-3-3	•COTTER-PIN -		1
- 8	MS28741-4-0110	•HOSE ASSY - MEDIUM PRESSURE DETACHABLE END FITTING (LANDING GEAR DOWN)		1
	AN804-4	•TEE -		1
	AN960D716	•WASHER -		1
	AN924-4D	•NUT -		1
- 9	151-58809-55	•LINE ASSY - LANDING GEAR DOWN TEE WING STA 63 TO UPLOCK (PORT WING)		1
	151-58810-55	•LINE ASSY - LANDING GEAR DOWN TEE WING STA 63 TO UPLOCK (STARBOARD WING)		1
-10	MS28741-4-0110	•HOSE ASSY - MEDIUM PRESSURE DETACHABLE END FITTING (LANDING GEAR DOWN)		1
	AN833-4	•ELBOW -		1
	AN960D716	•WASHER -		1
	AN924-4D	•NUT -		
-11	151-58831-43	•LINE ASSY - LANDING GEAR UP HOSE WING STA 63 TO RESTRICTOR (PORT WING)		
	151-58831-69	•LINE ASSY - LANDING GEAR UP HOSE WING STA 63 TO RESTRICTOR (STARBOARD WING)		
-12	1V7-18-30	•VALVE ASSY - HYDRAULIC TWO-WAY RESTR (NAA) (FOR BREAKDOWN SEE EO 15-71BB-4)		
	AN6290-4	•GASKET -		

FIGURE AND INDEX NUMBER	PART NUMBER	1234567 NOMENCLATURE	CODE	UNITS PER ASSY
GROUP HYDRAULIC EQUIPMENT				
MAJOR ASSEMBLY MAIN GEAR & FLAP HYDRAULIC EQUIPMENT				
201 -	AN815-4D	•UNION -		2
-13	191-58807-63	•LINE ASSY - LANDING GEAR UP RESTRICTOR TO TEE FLAP STA 8 (PORT WING)		1
	151-58831-67	•LINE ASSY - LANDING GEAR UP RESTRICTOR TO TEE FLAP STA 8 (STARBOARD WING)	001-200	1
	151-58831-867	•LINE ASSY - LANDING GEAR UP RESTRICTOR TO TEE FLAP STA 8 (STARBOARD WING)	201-	1
-14	AN824-4D	•TEE -		1
-15	151-58831-41	•LINE ASSY - LANDING GEAR UP TEE TO UPLOCK (PORT WING)	001-200	1
	151-58831-841	•LINE ASSY - LANDING GEAR UP TEE TO UPLOCK (PORT WING)	201-	1
	151-58831-65	•LINE ASSY - LANDING GEAR UP TEE TO UPLOCK (STARBOARD WING)	001-200	1
	151-58831-865	•LINE ASSY - LANDING GEAR UP TEE TO UPLOCK (STARBOARD WING)	201-	1
-16	140-58345	•CHECK-NUT - HYDRAULIC M/LDG/GR UPLOCK CYL		1
-17	140-58509	•NUT - HYDRAULIC UPLOCK CYLINDER SUPPORT		1
-18	140-58508	•BUSHING - HYDRAULIC UPLK CYLINDER SUPPORT		1
-19	151-33516	•PIN - MAIN LANDING GEAR STRUT UPLOCK LATCH ACTUATING LINK ATTACHING		1
	AN960-8	•WASHER -		1
	AN380-2-1	•COTTER-PIN -		1
-20	172-58802-955	•LINE ASSY - LANDING GEAR DOWN TEE IN UPLK CYL TO UNION FLAP STA 16 (PORT WING)		1
	172-58802-957	•LINE ASSY - LANDING GEAR DOWN TEE IN UPLK CYL TO UNION FLAP STA 16 (STBD WING)		1
-21	AN832-4	•UNION -		1
	AN960D716	•WASHER -		1
	AN924-4D	•NUT -		1
-22	170-58801-59	•LINE ASSY - LANDING GEAR DOWN UNION FLAP STA 16 TO ELBOW ON DOWNLOCK CYLINDER (PORT WING)		1
	170-58801-49	•LINE ASSY - LANDING GEAR DOWN UNION FLAP STA 16 TO ELBOW ON DOWNLOCK CYLINDER (STARBOARD WING)		1
-23	191-58807-59	•LINE ASSY - LANDING GEAR UP ELBOW FLAP STA 13 TO TEE (PORT WING)		1
	191-58807-65	•LINE ASSY - LANDING GEAR UP ELBOW FLAP STA 13 TO TEE (STARBOARD WING)		1
-24	AN837-4	•ELBOW -		1
	AN960D716	•WASHER -		1
	AN924-4D	•NUT -		1
-25	172-58801-65	•LINE ASSY - LANDING GEAR UP ELBOW FLAP STA 13 TO UNION FLAP STA 23 (PORT WING)		1
	170-58801-55	•LINE ASSY - LANDING GEAR UP ELBOW FLAP STA 13 TO ELBOW ON LOCKING CYLINDER (STARBOARD WING)		1
-26	AN815-4	•UNION -		1
-27	170-58801-57	•LINE ASSY - LANDING GEAR UP UNION FLAP STA 23 TO ELBOW ON DOWNLOCK CYLINDER (PORT WING)		1
-28	191-58807-39	•LINE ASSY - LANDING GEAR UP DOWNLOCK ELBOW TO ELBOW FLAP STA 17 (PORT WING)		1
	191-58807-41	•LINE ASSY - LANDING GEAR UP DOWNLOCK ELBOW TO ELBOW FLAP STA 17 (STBD WING)		1
	AN742D4	•CLAMP -		2
	AN520-10R8	•SCREW -		1
	AN365-1032	•NUT -		1
-29	AN837-4	•ELBOW -		1

FIGURE AND INDEX NUMBER	PART NUMBER	1234567 NOMENCLATURE	CODE	UNITS PER ASSY
	GROUP HYDRAULIC EQUIPMENT			
	MAJOR ASSEMBLY MAIN GEAR & FLAP HYDRAULIC EQUIPMENT			
201 -	AN960D716	•WASHER -		1
	AN924-4D	•NUT -		1
-30	151-58831-31	•LINE ASSY - LANDING GEAR UP ELBOW FLAP STA 17 TO DOWNLOCK TEE (PORT WING)		1
	151-58831-55	•LINE ASSY - LANDING GEAR UP ELBOW FLAP STA 17 TO DOWNLOCK TEE (STARBOARD WING)		1
-31	AN3-10	•BOLT - (DOWNLOCK CYLINDER TO DOWNLOCK ACTUATOR BELL-CRANK ATTACHMENT)		2
	AN960-10	•WASHER -		2
	AN960-10L	•WASHER -		2
-32	NAS72-3-005	•BUSHING -		2
	AN310-3	•NUT -		2
	AN380-2-2	•COTTER-PIN -		1
-33	151-58809-35	•LINE ASSY - BRAKE UNION TO UNION FLAP STA 21 (PORT WING)		1
	151-58810-35	•LINE ASSY - BRAKE UNION TO UNION FLAP STA 21 (STBD WING)		1
-34	AN832-4	•UNION -		1
	AN960D716	•WASHER -		1
	AN924-4D	•NUT -		1
-35	151-58250-1	•HOSE ASSY - HYDRAULIC LDG/GR BRAKE UPPER (PORT WING)		1
	151-58250-2	•HOSE ASSY - HYDRAULIC LDG/GR BRAKE UPPER (STARBOARD WING)		1
	MS28741-4-0260	••HOSE ASSY - MEDIUM PRESSURE DETACHABLE END FITTING (BRAKE)		1
	140-58519-1	••TUBE - HYDRAULIC LANDING GEAR BRAKE HOSE GUARD UPPER (PORT WING)		1
	140-58519-2	••TUBE - HYDRAULIC LANDING GEAR BRAKE HOSE GUARD UPPER (STARBOARD WING)		1
	10C2B8-11	••CONDUIT - (NAA)		1
-36	AN742-12C	•CLAMP -		1
	NAS43-3-12	•SPACER -		1
	NAS205-10	•SCREW -		1
	AN365-1032	•NUT -		1
-37	15117	•SUPPORT - T-BOLT SPECIAL SINGLE LEG (MPC)		1
	AN742D6C	•CLAMP -		1
-38	AN832-4	•UNION -		1
	AN960D716	•WASHER -		1
	AN924-4D	•NUT -		1
-39	151-58809-37	•LINE ASSY - BRAKE FLEXIBLE HOSE TO FLEXIBLE HOSE ON STRUT (PORT WING)		1
	151-58810-37	•LINE ASSY - BRAKE FLEXIBLE HOSE TO FLEXIBLE HOSE ON STRUT (STBD WING)		1
-40	41972	•CLAMP - (MPC)		1
	AN742D6C	•CLAMP -		1
-41	AN837-4	•ELBOW -		1
	AN960D716	•WASHER -		1
	AN924-4D	•NUT -		1
-42	MS28741-4-0190	•HOSE ASSY - MEDIUM PRESSURE DETACHABLE END FITTING (BRAKE)		1
-43	AN832-4	•UNION -		1
	AN924-4D	•NUT -		1
-44	151-58809-39	•LINE ASSY - BRAKE MAIN LANDING GEAR AXLE (PORT WING)		1
	151-58810-39	•LINE ASSY - BRAKE MAIN LANDING GEAR AXLE (STARBOARD WING)		1
-45	AN815-4	•UNION -		1
-46	MS28741-4-0110	•HOSE ASSY - MEDIUM PRESSURE DETACHABLE END FITTING (BRAKE)		1

FIGURE AND INDEX NUMBER	GROUP HYDRAULIC EQUIPMENT MAJOR ASSEMBLY MAIN GEAR & FLAP HYDRAULIC EQUIPMENT PART NUMBER	1234567 NOMENCLATURE	CODE	UNITS PER ASSY
201 -47	151-58184	•BOLT - HYDRAULIC BRAKE UNIVERSAL AXLE		1
	AN900-8	•GASKET -		1
-48	143-5	•COUPLING - (PPE) (SELF-SEALING)		1
	AN6227B8	•PACKING -		1
-49	140-58393	•CAP - HYDRAULIC BRAKE UNIVERSAL AXLE		1
-50	170-58815-951	•LINE ASSY - POWER CONTROL RSRVR VENT UNION TO UNION IN FLAP SHROUD (PORT WING)		1
	AN742D6	•CLAMP - (PORT WING)		2
	AN742D4	•CLAMP - (PORT WING)		2
	AN520-10R8	•SCREW - (PORT WING)		2
	AN365-1032	•NUT - (PORT WING)		2
-51	AN815-6D	•UNION - (PORT WING)		1
-52	170-58815-953	•LINE ASSY - POWER CONTROL RESERVOIR VENT UNION IN FLAP SHROUD TO HOSE IN FLAP (PORT WING)		1
	AN742D6	•CLAMP - (PORT WING)		2
	AN520-10R8	•SCREW - (PORT WING)		2
	NAS43DD-3-16	•SPACER - (PORT WING)		1
	AN365-1032	•NUT - (PORT WING)		2
-53	170-58297	•TUBE - HYDRAULIC SURFACE CONTROL VENT (PORT WING)		1
	A3122-10-59	•CLAMP - SPEED HOSE (TIN) (PORT WING)		1
	AN737TW26	•CLAMP - (PORT WING)		1
-54	191-58811-9	LINE ASSY - LANDING GEAR DOWN (SEE FIG.195)		REF
-55	140-33504	PIN ASSY - MAIN GEAR RETRACTABLE CYLINDER (SEE SECTION 4)		REF
		(CONTINUED SEE FIG. 202 FOR PORT WING & 204 FOR STARBOARD WING)		

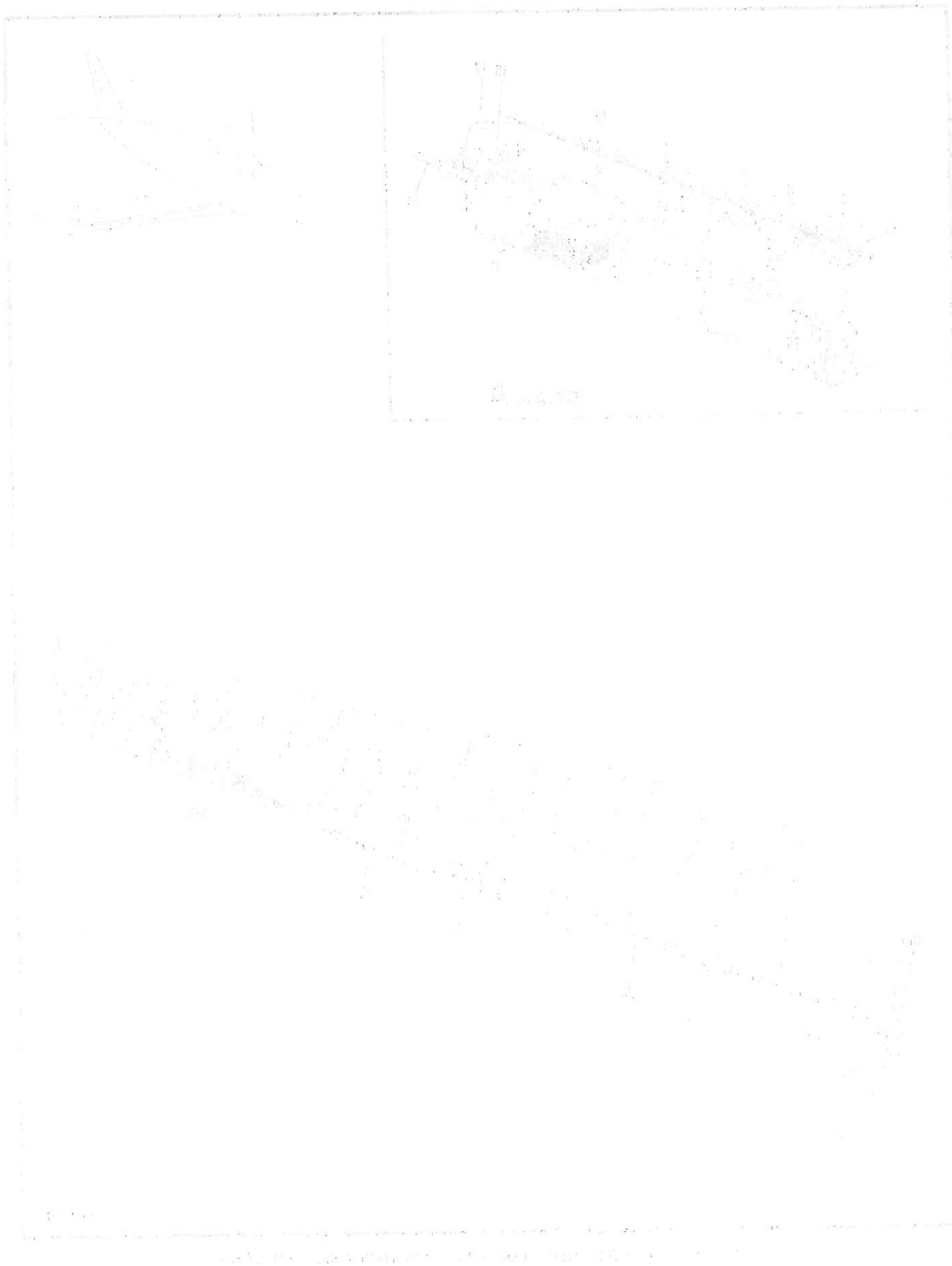

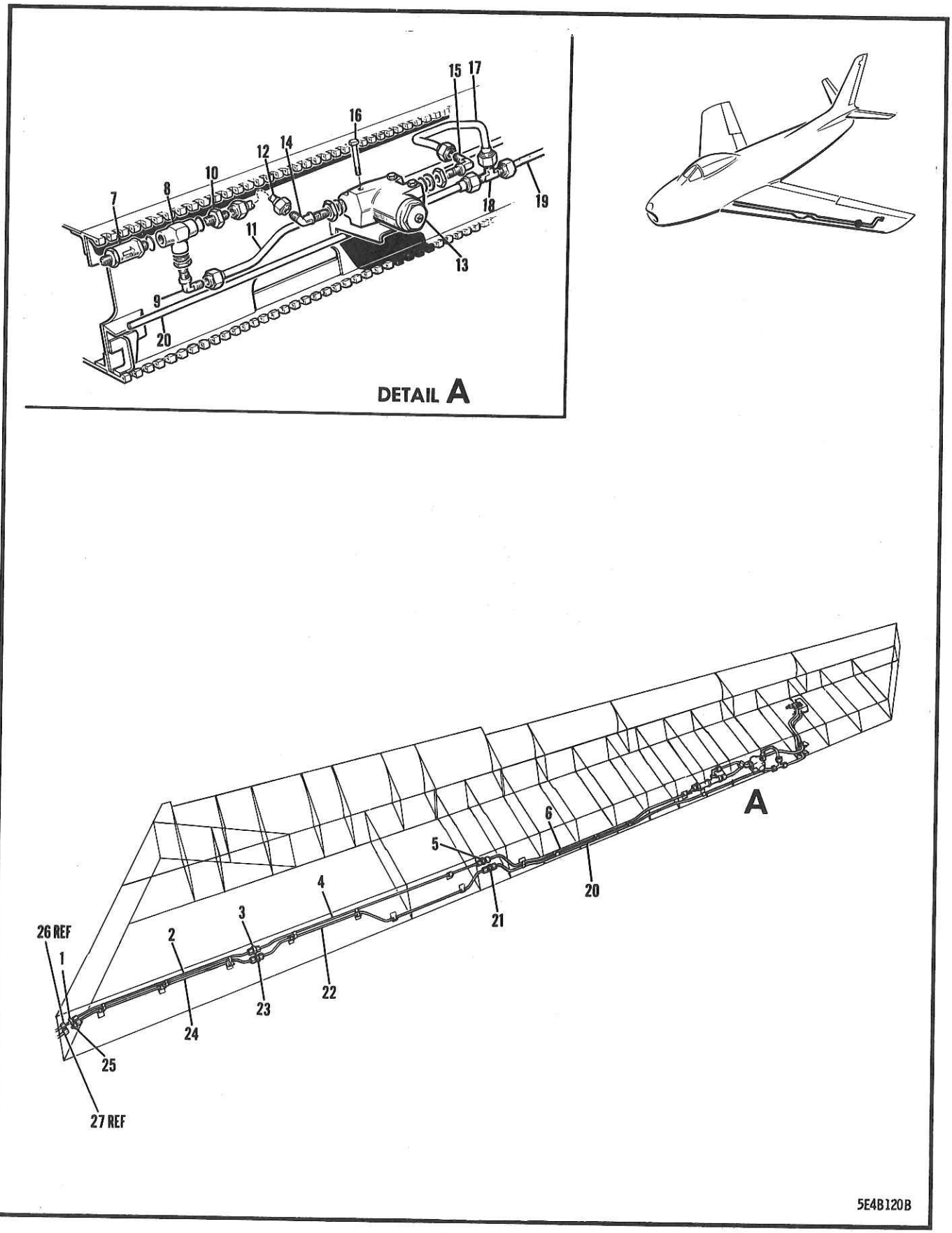

FIGURE 202 PORT WING FORWARD SPAR HYDRAULIC EQUIPMENT

FIGURE AND INDEX NUMBER	GROUP HYDRAULIC EQUIPMENT MAJOR ASSEMBLY PORT WING FORWARD SPAR HYDRAULIC EQUIPMENT PART NUMBER	1234567 NOMENCLATURE	CODE	UNITS PER ASSY
202 -	170-58063-801	HYDRAULIC EQUIP. INSTL - PORT WING (SEE FIG. 201) (FOR STARBOARD SIDE SEE FIG. 204)(AS PER EO 05-5E-6B/13)		REF
- 1	AN815-6D	.UNION -	001-370	1
	AN815-6	.UNION -	371-	1
- 2	170-58802-903	.LINE ASSY - AILERON PWR/CTL PRESS. UNION WING STA 34 TO UNION WING STA 89	001-370	1
	170-58802-1903	.LINE ASSY - AILERON PWR/CTL PRESS. UNION WING STA 34 TO UNION WING STA 89	371-	1
- 3	AN815-6D	.UNION -	001-370	1
	AN815-6	.UNION -	371-	1
- 4	170-58802-919	.LINE ASSY - AILERON PWR/CTL PRESS. UNION WING STA 89 TO UNION WING STA 147	001-370	1
	170-58802-1919	.LINE ASSY - AILERON PWR/CTL PRESS. UNION WING STA 89 TO UNION WING STA 147	371-	1
	AN742D6	.CLAMP -		1
	AN520-10R8	.SCREW -		1
	AN365-1032	.NUT -		1
- 5	AN815-6D	.UNION -	001-370	1
	AN815-6	.UNION - (AS PER EO 05-5E-6B/9)	371-	1
- 6	13A-71851-3	.LINE ASSY - AILERON NORMAL SUR CTL PRESS. UNION WING STA 147 TO CHECK VALVE WING STA 192	001-370	1
	13A-71851-1011	.LINE ASSY - AILERON NORMAL SUR CTL PRESS. UNION WING STA 147 TO CHECK VALVE WING STA 192 (AS PER EO 05-5E-6B/9)	371-	1
	AN742D6	.CLAMP -		3
	AN520-10R8	.SCREW -		3
	AN365-1032	.NUT -		3
	AN742D6	.CLAMP -	001-370	1
	AN742D13	.CLAMP - (AS PER EO 05-5E-6B/9)	371-	1
	AN520-10R8	.SCREW -		1
	AN365-1032	.NUT -		1
- 7	AN6249-6	.VALVE - 3000-PSI HYDRAULIC CHECK		1
	AN6290-6	.GASKET -		3
- 8	AN938D6	.TEE -		1
	AN6291-6	.RING -		1
	AN6289-6	.NUT -		1
- 9	AN833-6D	.ELBOW -	001-370	1
	AN833-6	.ELBOW - (AS PER EO 05-5E-6B/9)	371-	1
-10	AN815-6D	.UNION -	001-370	1
	AN815-6	.UNION - (AS PER EO 05-5E-6B/9)	371-	1
-11	191-58807-7	.LINE ASSY - AILERON NORMAL SUR CTL PRESS. ELBOW WING STA 231 TO BLOCK TEE	001-100	1
	191-58807-956	.LINE ASSY - AILERON NORMAL SUR CTL PRESS. ELBOW WING STA 231 TO BLOCK TEE	101-324	1
	191-58807-958	.LINE ASSY - AILERON NORMAL SUR CTL PRESS. ELBOW WING STA 231 TO BLOCK TEE	325-370	1
	191-58807-1907	.LINE ASSY - AILERON NORMAL SUR CTL PRESS. ELBOW WING STA 231 TO BLOCK TEE (AS PER EO 05-5E-6B/9)	371-	1
-12	191-58807-5	.LINE ASSY - AILERON NORMAL SUR CTL PRESS. TEE WING STA 233 TO ELBOW ON RV	001-370	1
	191-58807-1905	.LINE ASSY - AILERON NORMAL SUR CTL PRESS. TEE WING STA 233 TO ELBOW ON RV (AS PER EO 05-5E-6B/9)	371-	1
	AN742D6	.CLAMP -		1
	AN520-10R8	.SCREW -		1
	AN365-1032	.NUT -		1
	170-58636-803	.RELIEF-VALVE ASSY - AILERON SURFACE CONTROL HYDRAULIC	001-370	1
	BREAKDOWN REWORKED AS PER EO 05-5E-6B/13			

FIGURE AND INDEX NUMBER	PART NUMBER	1234567 NOMENCLATURE	CODE	UNITS PER ASSY
	GROUP HYDRAULIC EQUIPMENT			
	MAJOR ASSEMBLY PORT WING FORWARD SPAR HYDRAULIC EQUIPMENT			
202 -	170-58636-805	•RELIEF-VALVE ASSY - AILERON SURFACE CONTROL HYDRAULIC	371-	1
-13	AN6279-6CD	••RELIEF-VALVE - HYDRAULIC PRESS. TWO-PORT		1
	AN6290-6	••GASKET -		2
	AN6291-6	••RING -		2
	AN6289-6	••NUT -		2
-14	AN837-6D	••ELBOW -	001-370	1
	AN837-6	••ELBOW - (AS PER EO 05-5E-6B/9)	371-	1
-15	AN833-6D	••ELBOW -	001-370	1
	AN833-6	••ELBOW -	371-	1
-16	AN3-22A	•BOLT - (VALVE TO BRACKET ATTACHING)		3
	AN960-10L	•WASHER -	001-370	3
	AN960-10	•WASHER -	371-	3
	AN365-1032	•NUT -		3
-17	13A-71851-7	•LINE ASSY - AILERON NORMAL SUR CTL RETURN ELBOW ON RV TO TEE WING STA 231	001-370	1
	13A-71851-1007	•LINE ASSY - AILERON NORMAL SUR CTL RETURN ELBOW ON RV TO TEE WING STA 231	371-	1
-18	AN824-6D	•TEE -	001-370	1
	AN824-6	•TEE - (AS PER EO 05-5E-6B/9)	371-	1
-19	13A-71851-9	•LINE ASSY - AILERON NORMAL SUR CTL RETURN TEE ON BLOCK TO TEE WING STA 230	001-370	1
	13A-71851-1009	•LINE ASSY - AILERON NORMAL SUR CTL RETURN TEE ON BLOCK TO TEE WING STA 230	371-	1
	AN742D6	•CLAMP -		1
	AN520-10R8	•SCREW -		1
	AN365-1032	•NUT -		1
-20	13A-71851-5	•LINE ASSY - AILERON NORMAL SUR CTL RET TEE WING STA 230 TO UNION WING STA 147	001-370	1
	13A-71851-1013	•LINE ASSY - AILERON NORMAL SUR CTL RET TEE WING STA 230 TO UNION WING STA 147 (AS PER EO 05-5E-6B/9)	371-	1
	AN742D6	•CLAMP -		4
	AN520-10R8	•SCREW -		4
	NAS43DD-3-16	•SPACER -	001-610	2
	NAS43DD-3-56	•SPACER -	001-610	1
	NAS43DD-3-72	•SPACER -		1
	AN365-632	•NUT -		4
-21	AN815-6D	•UNION -	001-370	1
	AN815-6	•UNION - (AS PER EO 05-5E-6B/9)	371-	1
-22	170-58802-23	•LINE ASSY - AILERON PWR/CTL RET UNION WING STA 89 TO UNION WING STA 147	001-370	1
	170-58802-1023	•LINE ASSY - AILERON PWR/CTL RETURN UNION WING STA 89 TO UNION WING STA 147	371-	1
	AN742D6	•CLAMP -		7
	AN520-10R8	•SCREW -		5
	NAS43DD-3-48	•SPACER -		1
	AN365-1032	•NUT -		5
-23	AN815-6D	•UNION -	001-370	1
	AN815-6	•UNION -	371-	1
-24	170-58802-7	•LINE ASSY - AILERON PWR/CTL RET UNION WING STA 34 TO UNION WING STA 89	001-370	1
	170-58802-1007	•LINE ASSY - AILERON PWR/CTL RET UNION WING STA 34 TO UNION WING STA 89	371-	1
-25	AN815-6D	•UNION -	001-370	1
	AN815-6	•UNION -	371-	1
	AN742D6	•CLAMP -		9
	AN520-10R8	•SCREW -		6
	AN365-1032	•NUT -		6
-26	13A-71871-9	LINE ASSY - NORMAL SURFACE CONTROL PRESSURE (SEE FIG. 200)		REF
	BREAKDOWN REWORKED AS PER EO 05-5E-6B/13			

FIGURE AND INDEX NUMBER	GROUP HYDRAULIC EQUIPMENT MAJOR ASSEMBLY PORT WING FORWARD SPAR HYDRAULIC EQUIPMENT PART NUMBER	1234567 NOMENCLATURE	CODE	UNITS PER ASSY
202 -27	172-58801-27	LINE ASSY - POWER CONTROL RETURN (SEE FIG. 200) (CONTINUED SEE FIG. 203)		REF
	BREAKDOWN REWORKED AS PER EO 05-5E-6B/13			

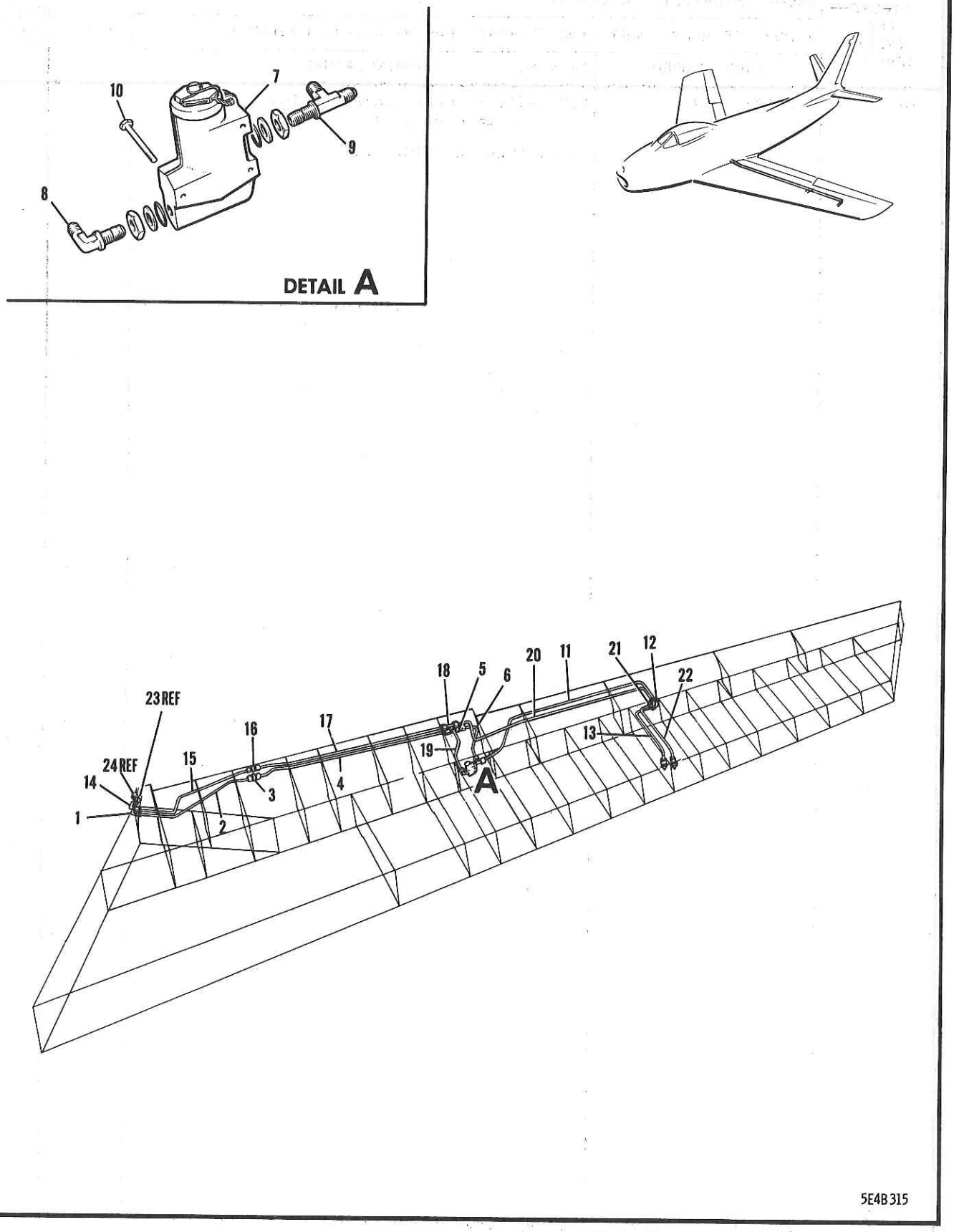

FIGURE 203 PORT WING REAR SPAR HYDRAULIC EQUIPMENT

FIGURE AND INDEX NUMBER	GROUP HYDRAULIC EQUIPMENT MAJOR ASSEMBLY PORT WING REAR SPAR HYDRAULIC EQUIPMENT PART NUMBER	1234567 NOMENCLATURE	CODE	UNITS PER ASSY
203 -	170-58063-801	HYDRAULIC EQUIP. INSTL - PORT WING (SEE FIG.201)(AS PER EO 05-5E-6B/13)		REF
- 1	AN833-6D	.ELBOW -	001-370	1
	AN833-6	.ELBOW -	371-	1
	AN960D916	.WASHER -		1
	AN924-6D	.NUT -		1
- 2	191-58807-29	.LINE ASSY - AILERON SURFACE CONTROL ALTERNATE PRESSURE (OUTER PANEL ELL. TO UNION FLAP STA 33)	001-370	1
	191-58807-1029	.LINE ASSY - AILERON SURFACE CONTROL ALTERNATE PRESSURE (OUTER PANEL ELL. TO UNION FLAP STA 33)	371-	1
- 3	AN815-6D	.UNION -	001-370	1
	AN815-6	.UNION -	371-	1
- 4	191-58807-11	.LINE ASSY - AILERON SURFACE CONTROL ALTERNATE PRESSURE (ELBOW TO UNION FLAP STA 33-84)	001-370	1
	191-58807-1011	.LINE ASSY - AILERON SURFACE CONTROL ALTERNATE PRESSURE (ELBOW TO UNION FLAP STA 33-84)	371-	1
- 5	AN6249-6	.VALVE - 3000-PSI HYDRAULIC CHECK		1
- 6	191-58807-35	.LINE ASSY - AILERON SURFACE CTL ALTERNATE PRESSURE (CHECK VALVE AT AIL. STA 86 TO TEE ON RETURN VALVE)	001-370	1
	191-58807-1035	.LINE ASSY - AILERON SURFACE CTL ALTERNATE PRESSURE (CHECK VALVE AT AIL. STA 86 TO TEE ON RETURN VALVE)	371-	1
	172-58634-5	.RELIEF-VALVE ASSY - AILERON SURFACE CONTROL ALTERNATE HYDRAULIC	001-370	1
	172-58634-805	.RELIEF-VALVE ASSY - AILERON SURFACE CONTROL ALTERNATE HYDRAULIC	371-	1
- 7	AN6279-6CD	..RELIEF-VALVE - HYDRAULIC PRESS. TWO-PORT		1
	AN6291-6	..RING -		2
	AN6290-6	..GASKET -		2
	AN6289-6	..NUT -		2
- 8	AN833-6D	..ELBOW -	001-370	1
	AN833-6	..ELBOW -	371-	1
- 9	AN804D6	..TEE -	001-370	1
	AN804-6	..TEE -	371-	1
-10	AN3-22A	.BOLT - (VALVE TO REAR SPAR ATTACHING)		3
	AN960-10L	.WASHER -		3
	AN365-1032	.NUT -		3
-11	191-58807-950	.LINE ASSY - AILERON POWER CTL EMERGENCY PRESSURE (RELIEF-VALVE TEE TO ELBOW AT AILERON STA 50)	001-370	1
	191-58807-1950	.LINE ASSY - AILERON POWER CTL EMERGENCY PRESSURE (RELIEF-VALVE TEE TO ELBOW AT AILERON STA 50)	371-	1
	170-14622-37	.FAIRLEAD - AILERON EMERGENCY HYD LINE		1
	170-14622-39	.FAIRLEAD - AILERON EMERGENCY HYD LINE		1
	AN520-10R14	.SCREW -		2
	AN365-1032	.NUT -		2
	AN742D6	.CLAMP -	001-370	4
	82648-6	.CLAMP - (ADE)	371-	4
		OR		
	TA6C1	.CLAMP - (TAI)	371-	
	AN509-8R8	.SCREW -	001-370	4
	AN509-8R8	.SCREW -	371-	2
	AN509-8R5	.SCREW -	371-	2
	NAS43DD-3-12	.SPACER -	001-370	3
	BREAKDOWN REWORKED AS PER EO 05-5E-6B/13			

FIGURE AND INDEX NUMBER	GROUP HYDRAULIC EQUIPMENT MAJOR ASSEMBLY PORT WING REAR SPAR HYDRAULIC EQUIPMENT PART NUMBER	1234567 NOMENCLATURE	CODE	UNITS PER ASSY
203 -	2W18-10	•WASHER - PLAIN (NAA)	371-	5
	AN365-832	•NUT -		4
-12	AN821-6D	•ELBOW -	001-370	1
	AN821-6	•ELBOW -	371-	1
-13	191-58807-952	•LINE ASSY - AILERON POWER CTL EMERGENCY PRESSURE (ELBOW AT AILERON STA 50 TO BLOCK ELBOW)	001-100	1
	191-58807-954	•LINE ASSY - AILERON POWER CTL EMERGENCY PRESSURE (ELBOW AT AILERON STA 50 TO BLOCK ELBOW)	101-370	1
	191-58807-1954	•LINE ASSY - AILERON POWER CTL EMERGENCY PRESSURE (ELBOW AT AILERON STA 50 TO BLOCK ELBOW)	371-	1
-14	AN833-6D	•ELBOW -	001-370	1
	AN833-6	•ELBOW -	371-	1
	AN960D916	•WASHER -		1
	AN924-6D	•NUT -		1
-15	191-58807-25	•LINE ASSY - AILERON SURFACE CTL ALTERNATE RETURN (OUTER PANEL ELBOW TO UNION AT FLAP STA 33)	001-370	1
	191-58807-1025	•LINE ASSY - AILERON SURFACE CTL ALTERNATE RETURN (OUTER PANEL ELBOW TO UNION AT FLAP STA 33)	371-	1
-16	AN815-6D	•UNION -	001-370	1
	AN815-6	•UNION -	371-	1
-17	170-58803-23	•LINE ASSY - AILERON POWER CTL EMERGENCY RETURN (UNION TO TEE FLAP STA 33-84)	001-370	1
	170-58803-1023	•LINE ASSY - AILERON POWER CTL EMERGENCY RETURN (UNION TO TEE FLAP STA 33-84)	371-	1
	AN742D6	•CLAMP -		8
	AN520-10R8	•SCREW -		4
	AN365-1032	•NUT -		4
-18	AN824-6D	•TEE -	001-370	1
	AN824-6	•TEE -	371-	1
-19	172-58802-25	•LINE ASSY - AILERON SURFACE CTL ALTERNATE RETURN (TEE AT FLAP STA 88 TO RELIEF-VALVE ELBOW)	001-370	1
	172-58802-1025	•LINE ASSY - AILERON SURFACE CTL ALTERNATE RETURN (TEE AT FLAP STA 88 TO RELIEF-VALVE ELBOW)	371-	1
-20	172-58802-954	•LINE ASSY - AILERON POWER CTL EMERGENCY RETURN (TEE TO ELBOW FLAP STA 88 TO AILERON STA 50)	001-370	1
	172-58802-1954	•LINE ASSY - AILERON POWER CTL EMERGENCY RETURN (TEE TO ELBOW FLAP STA 88 TO AILERON STA 50)	371-	1
	AN742D6	•CLAMP -	001-370	5
	82648-6	•CLAMP - (ADE)	371-	5
		OR		
	TA6C1	•CLAMP - (TAI)	371-	
	AN509-8R8	•SCREW -		2
	AN520-10R14	•SCREW -		1
	AN515-10R10	•SCREW -	001-370	1
	AN515-8R8	•SCREW -	371-	1
	NAS43DD-3-8	•SPACER -	001-370	1
	NAS43DD-3-12	•SPACER -	371-	1
	NAS43DD-3-32	•SPACER -		1
	2W18-8	•WASHER - PLAIN (NAA)		2
	2W18-10	•WASHER - PLAIN (NAA)	371-	5
	AN365-832	•NUT -		3
	BREAKDOWN REWORKED AS PER EO 05-5E-6B/13			

FIGURE AND INDEX NUMBER	GROUP HYDRAULIC EQUIPMENT MAJOR ASSEMBLY PORT WING REAR SPAR HYDRAULIC EQUIPMENT PART NUMBER	1234567 NOMENCLATURE	CODE	UNITS PER ASSY
203 -	AN365-1032	•NUT -		1
-21	AN821-6D	•ELBOW -	001-370	1
	AN821-6	•ELBOW -	371-	1
-22	172-58802-956	•LINE ASSY - AILERON POWER CTL EMERGENCY RETURN (ELBOW TO AILERON STA 50 TO BLOCK ELBOW)	001-370	1
	172-58802-1956	•LINE ASSY - AILERON POWER CTL EMERGENCY RETURN (ELBOW AT AILERON STA 50 TO BLOCK ELBOW)	371-	1
	170-14622-13	•FAIRLEAD - AILERON EMERGENCY HYD LINE		1
	170-14622-15	•FAIRLEAD - AILERON EMERGENCY HYD LINE		1
	AN515-8R8	•SCREW -		2
-23	13A-71812-9	LINE ASSY - SURFACE CONTROL ALTERNATE PRESSURE (SEE FIG. 199)		REF
-24	13A-71812-19	LINE ASSY - SURFACE CONTROL ALTERNATE RETURN (SEE FIG. 199)		REF
		-000-		
	BREAKDOWN REWORKED AS PER EO 05-5E-6B/13			

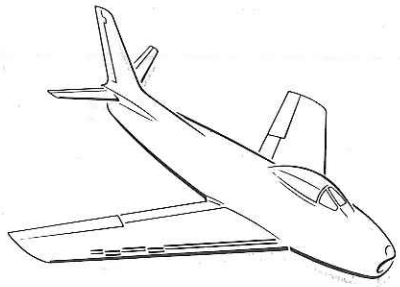

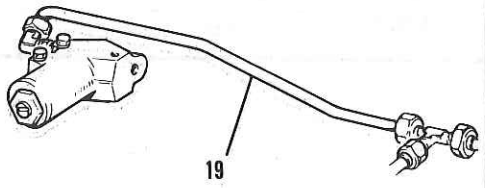

DETAIL A
EFFECTIVE AIRCRAFT 230371 AND SUBSEQUENT

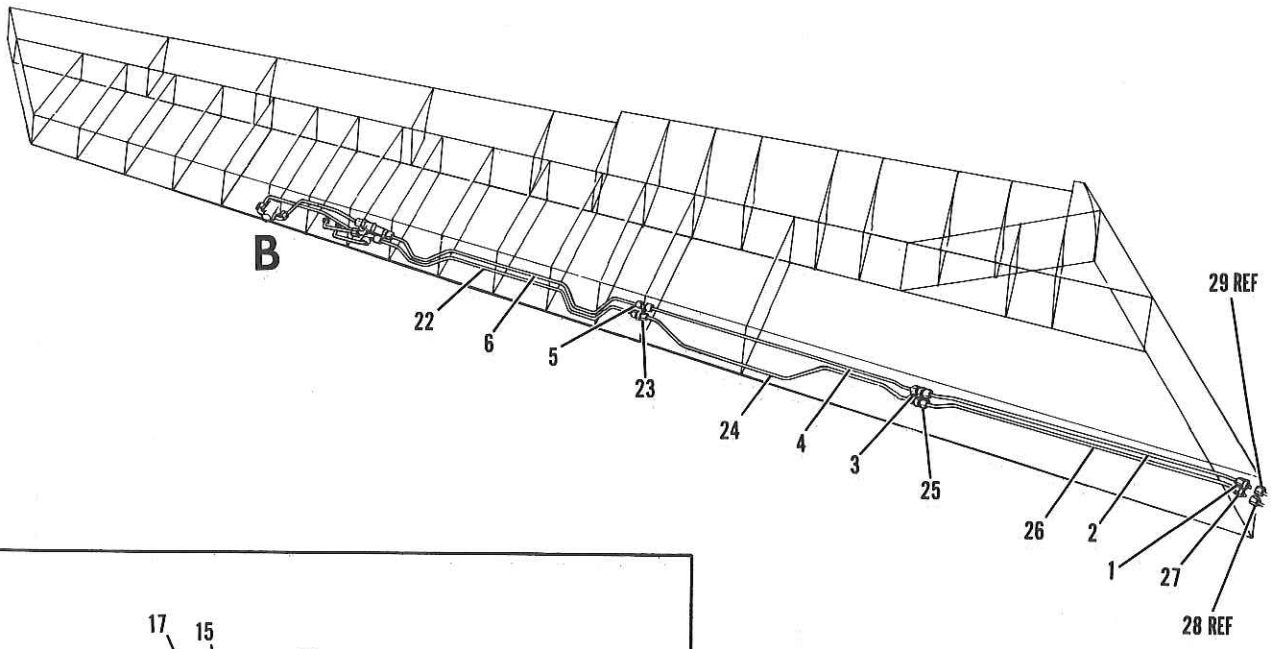

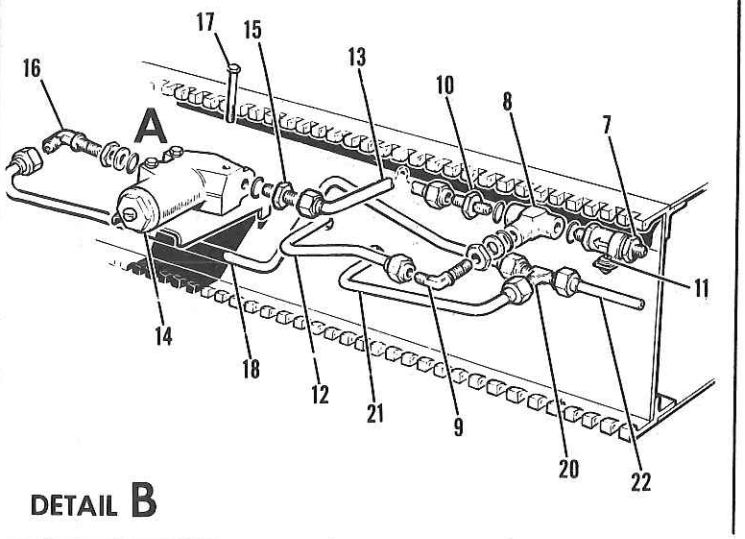

DETAIL B

5E4B260A

FIGURE 204 STARBOARD WING FORWARD SPAR HYDRAULIC EQUIPMENT

FIGURE AND INDEX NUMBER	GROUP HYDRAULIC EQUIPMENT MAJOR ASSEMBLY STARBOARD WING FORWARD SPAR HYDRAULIC EQUIPMENT PART NUMBER	1234567 NOMENCLATURE	CODE	UNITS PER ASSY
204 -	170-58063-802	HYDRAULIC EQUIP. INSTL - STARBOARD WING (SEE FIG. 201) (FOR PORT SIDE SEE FIG.202) (AS PER EO 05-5E-6B/13)		REF
- 1	AN815-6D	.UNION -	001-370	1
	AN815-6	.UNION -	371-	1
- 2	170-58802-905	.LINE ASSY - AILERON PWR/CTL PRESSURE UNION WING STA 33 TO UNION WING STA 89	001-370	1
	170-58802-1905	.LINE ASSY - AILERON PWR/CTL PRESSURE UNION WING STA 33 TO UNION WING STA 89	371-	1
- 3	AN815-6D	.UNION -	001-370	1
	AN815-6	.UNION -	371-	1
- 4	170-58802-921	.LINE ASSY - AIL. PWR/CTL PRESS. RH UNION WING STA 89 TO UNION WING STA 147	001-370	1
	170-58802-1921	.LINE ASSY - AIL. PWR/CTL PRESS. RH UNION WING STA 89 TO UNION WING STA 147	371-	1
	AN742D6	.CLAMP -		1
	AN520-10R8	.SCREW -		1
	AN365-1032	.NUT -		1
- 5	AN815-6D	.UNION -	001-370	1
	AN815-6	.UNION - (AS PER EO 05-5E-6B/9)	371-	1
- 6	13A-71861-9	.LINE ASSY - NORMAL SURFACE CTL PRESSURE UNION WING STA 146 TO CHECK VALVE	001-370	1
	13A-71861-1015	.LINE ASSY - NORMAL SURFACE CTL PRESSURE UNION WING STA 146 TO CHECK VALVE (AS PER EO 05-5E-6B/9)	371-	1
	AN742D6	.CLAMP -		3
	AN520-10R8	.SCREW -		3
	NAS43DD-3-12	.SPACER -		3
	AN365-1032	.NUT -		3
- 7	AN6249-6	.VALVE - 3000-PSI HYDRAULIC CHECK		1
	AN6290-6	.GASKET -		3
- 8	AN938D6	.TEE -		1
	AN6291-6	.RING -		1
	AN6289D6	.NUT -		1
- 9	AN833-6D	.ELBOW -	001-370	1
	AN833-6	.ELBOW -	371-	1
-10	AN815-6D	.UNION -	001-370	1
	AN815-6	.UNION - (AS PER EO 05-5E-6B/9)	371-	1
-11	AN742D13	.CLAMP -		1
	AN520-10R8	.SCREW -		1
	AN365-1032	.NUT -		1
-12	191-58807-9	.LINE ASSY - NORMAL AIL. SUR CTL PRESSURE ELBOW WING STA 197 TO BLOCK UNION	001-370	1
	191-58807-1009	.LINE ASSY - NORMAL AIL. SUR CTL PRESSURE ELBOW WING STA 197 TO BLOCK UNION	371-	1
-13	191-58807-3	.LINE ASSY - NORMAL AIL. SUR CTL PRESSURE TEE WING STA 198 TO ELBOW ON RV	001-370	1
	191-58807-1903	.LINE ASSY - NORMAL AIL. SUR CTL PRESSURE TEE WING STA 198 TO ELBOW ON RV (AS PER EO 05-5E-6B/9)	371-	1
	170-58637-803	.RELIEF-VALVE ASSY - HYDRAULIC AILERON SURFACE CONTROL	001-370	1
	170-58637-815	.RELIEF-VALVE ASSY - HYDRAULIC AILERON SUR CONTROL (AS PER EO 05-5E-6B/9)	371-	1
-14	AN6279-6CD	..RELIEF-VALVE - HYDRAULIC PRESS TWO-PORT		1
	AN6290-6	..GASKET -		1
	AN6291-6	..RING -	001-370	1
	AN6291-6	..RING - (AS PER EO 05-5E-6B/9)	371-	2
	AN6289D6	..NUT -	001-370	1
	AN6289D6	..NUT - (AS PER EO 05-5E-6B/9)	371-	2
	BREAKDOWN REWORKED AS PER EO 05-5E-6B/13			

FIGURE AND INDEX NUMBER	GROUP HYDRAULIC EQUIPMENT MAJOR ASSEMBLY STARBOARD WING FORWARD SPAR HYDRAULIC EQUIPMENT PART NUMBER	1234567 NOMENCLATURE	CODE	UNITS PER ASSY
204 -15	AN815-6D	••UNION -	001-370	1
	AN837-6	••ELBOW - (AS PER EO 05-5E-6B/9)	371-	1
	AN6290-6	••GASKET -		1
-16	AN833-6D	••ELBOW -	001-370	1
	AN833-6	••ELBOW - (AS PER EO 05-5E-6B/9)	371-	1
-17	AN3-22A	•BOLT -		3
	AN960-10L	•WASHER -		3
	AN960D10	•WASHER -		AR
	AN365-1032	•NUT -		3
-18	13A-71861-7	•LINE ASSY - NORMAL SURFACE CONTROL RETURN RELIEF-VALVE TO TEE STA 196	001-370	1
-19	13A-71861-1013	•LINE ASSY - NORMAL SUR CTL RETURN RV TO TEE STA 196 (AS PER EO 05-5E-6B/9)	371-	1
-20	AN824-6D	•TEE -	001-370	1
	AN824-6	•TEE - (AS PER EO 05-5E-6B/9)	371-	1
-21	13A-71861-3	•LINE ASSY - NORMAL SURFACE CONTROL RETURN BULKHEAD UNION TO TEE WING STA 196		1
	170-58802-1077	•LINE ASSY - POWER CONTROL RET UNION TO TEE WING STA 196 (AS PER EO 05-5E-6B/9)	371-	1
-22	13A-71861-5	•LINE ASSY - NORMAL SURFACE CONTROL RETURN TEE WING STA 196 TO UNION STA 148	001-370	1
	13A-71861-1011	•LINE ASSY - NORMAL SURFACE CONTROL RETURN TEE WING STA 196 TO UNION STA 148 (AS PER EO 05-5E-6B/9)	371-	1
-23	AN815-6D	•UNION -	001-370	1
	AN815-6	•UNION - (AS PER EO 05-5E-6B/9)	371-	1
	AN742D6	•CLAMP -		4
	AN520-10R8	•SCREW -		4
	NAS43DD-3-36	•SPACER -	001-610	4
	AN365-1032	•NUT -		4
-24	170-58802-25	•LINE ASSY - AILERON PWR/CTL RETURN UNION WING STA 89 TO UNION WING STA 147	001-370	1
	170-58802-1025	•LINE ASSY - AILERON PWR/CTL RETURN UNION WING STA 89 TO UNION WING STA 147	371-	1
-25	AN815-6D	•UNION -	001-370	1
	AN815-6	•UNION -	371-	1
	AN742D6	•CLAMP -		7
	AN520-10R8	•SCREW -		5
	AN520-10R20	•SCREW -		1
	NAS43DD-3-48	•SPACER -		1
	AN365-1032	•NUT -		6
-26	170-58802-9	•LINE ASSY - AILERON POWER CONTROL RETURN UNION WING STA 33 TO UNION STA 89	001-370	1
	170-58802-1009	•LINE ASSY - AILERON POWER CONTROL RETURN UNION WING STA 33 TO UNION STA 89	371-	1
-27	AN815-6D	•UNION -	001-370	1
	AN815-6	•UNION -	371-	1
	AN742D6	•CLAMP -		9
	AN520-10R8	•SCREW -		6
	AN365-1032	•NUT -		6
-28	172-58801-9	LINE ASSY - POWER CONTROL RETURN (SEE FIG. 200)		REF
-29	13A-71871-11	LINE ASSY - NORMAL SURFACE CONTROL PRESSURE (SEE FIG. 200)		REF
		(CONTINUED SEE FIG. 205)		
	BREAKDOWN REWORKED AS PER EO 05-5E-6B/13			

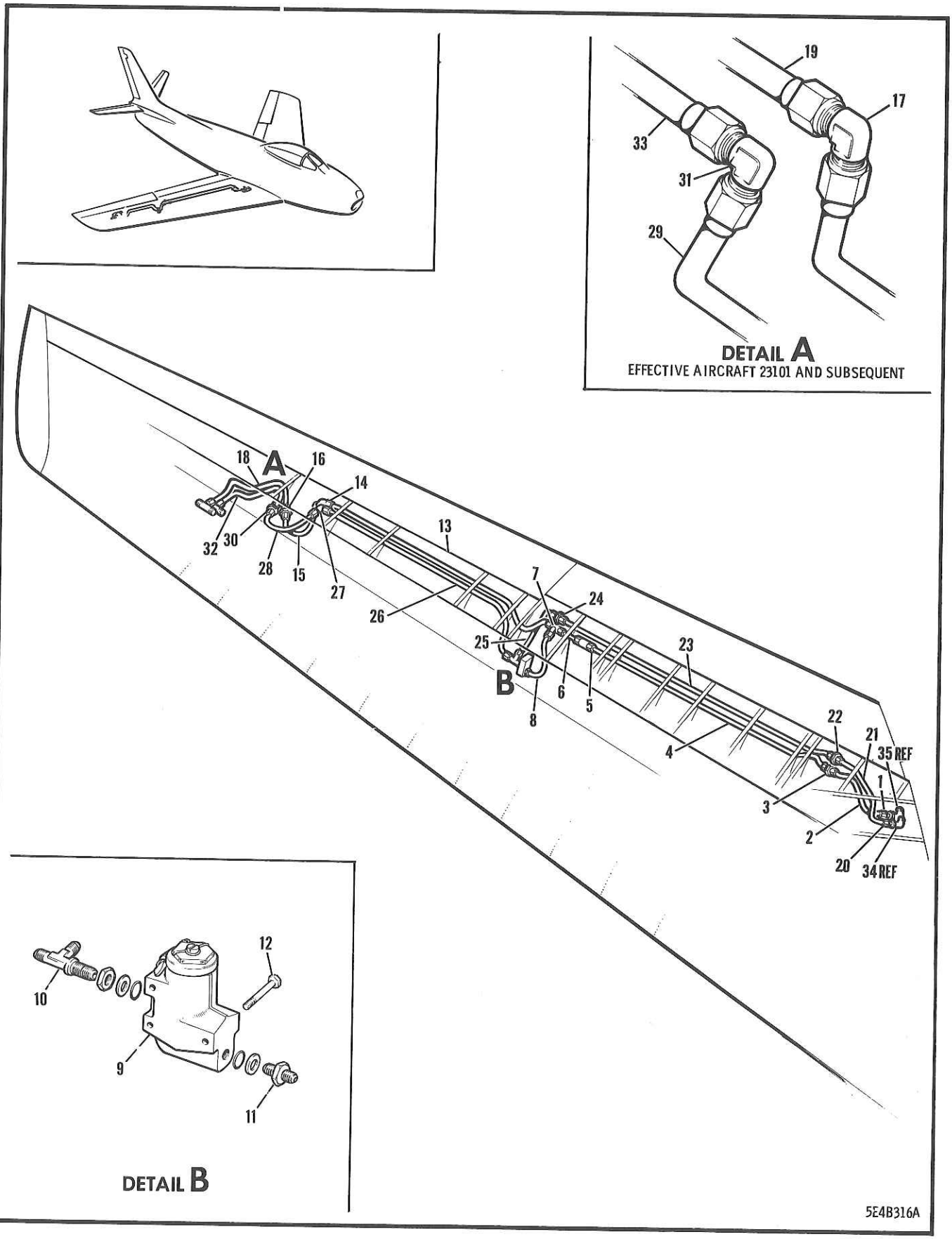

FIGURE 205 STARBOARD WING REAR SPAR HYDRAULIC EQUIPMENT

FIGURE AND INDEX NUMBER	GROUP HYDRAULIC EQUIPMENT MAJOR ASSEMBLY STARBOARD WING REAR SPAR HYDRAULIC EQUIPMENT PART NUMBER	1234567 NOMENCLATURE	CODE	UNITS PER ASSY
205 -	170-58063-802	HYDRAULIC EQUIP. INSTL - STARBOARD WING (SEE FIG.201)(AS PER EO 05-5E-6B/13)		REF
- 1	AN833-6D	.ELBOW -	001-370	1
	AN833-6	.ELBOW -	371-	1
	AN960D916	.WASHER -		1
	AN924-6D	.NUT -		1
- 2	191-58807-31	.LINE ASSY - ALTERNATE AIL. SUR CTL PRESS. ELBOW O/PNL TO UNION FLAP STA 33	001-370	1
	191-58807-1031	.LINE ASSY - ALTERNATE AIL. SUR CTL PRESS. ELBOW O/PNL TO UNION FLAP STA 33	371-	1
- 3	AN815-6D	.UNION -	001-370	1
	AN815-6	.UNION -	371-	1
- 4	191-58807-19	.LINE ASSY - ALTERNATE AIL. SUR CTL PRESS. UNION FLAP STA 33 TO CHECK VALVE	001-370	
	191-58807-1019	.LINE ASSY - ALTERNATE AIL. SUR CTL PRESS. UNION FLAP STA 33 TO CHECK VALVE	371-	1
- 5	AN6249-6	.VALVE - 3000-PSI HYDRAULIC CHECK		1
- 6	191-58807-21	.LINE ASSY - ALTERNATE AILERON SURFACE CONTROL PRESSURE CHECK VALVE TO TEE	001-370	1
	191-58807-1021	.LINE ASSY - ALTERNATE AILERON SURFACE CONTROL PRESSURE CHECK VALVE TO TEE	371-	1
- 7	AN824-6D	.TEE -	001-370	1
	AN824-6	.TEE -	371-	1
- 8	191-58807-23	.LINE ASSY - ALTERNATE AIL. SURFACE CONTROL PRESSURE TEE TO RELIEF-VALVE	001-370	1
	191-58807-1023	.LINE ASSY - ALTERNATE AIL. SURFACE CONTROL PRESSURE TEE TO RELIEF-VALVE	371-	1
	172-58635-5	.RELIEF-VALVE ASSY - HYDRAULIC AILERON ALTERNATE SURFACE CONTROL	001-370	1
	172-58635-805	.RELIEF-VALVE ASSY - HYDRAULIC AILERON ALTERNATE SURFACE CONTROL	371-	1
- 9	AN6279-6CD	..RELIEF-VALVE - HYDRAULIC PRESS. TWO-PORT		1
	AN6290-6	..GASKET -		1
	AN6291-6	..RING -		1
	AN6289-6	..NUT -		1
-10	AN804D6	..TEE -	001-370	1
	AN804-6	..TEE -	371-	1
	AN6290-6	..GASKET -		1
-11	AN815-6D	..UNION -	001-370	1
	AN815-6	..UNION -	371-	1
-12	AN3-22A	.BOLT -		3
	AN960-10L	.WASHER -		3
	AN960D10	.WASHER -		AR
	AN365-1032	.NUT -		3
-13	191-58807-13	.LINE ASSY - ALTERNATE AILERON SURFACE CTL PRESSURE TEE FLAP STA 84 TO UNION AILERON STA 50	001-370	1
	191-58807-1013	.LINE ASSY - ALTERNATE AILERON SURFACE CTL PRESSURE TEE FLAP STA 84 TO UNION AILERON STA 50	371-	1
	AN742D6	.CLAMP -	001-370	4
	82648-6	.CLAMP - (ADE)	371-	4
		OR	371-	
	TA6C1	.CLAMP - (TAI)	001-370	4
	AN509-8R8	.SCREW -	371-	2
	AN509-8R8	.SCREW -	371-	2
	AN509-8R5	.SCREW -	001-370	2
	NAS43DD-3-8	.SPACER -	371-	4
	2W18-10	.WASHER - PLAIN (NAA)		4
	AN365-832	.NUT -		
	BREAKDOWN REWORKED AS PER EO 05-5E-6B/13			

FIGURE AND INDEX NUMBER	GROUP HYDRAULIC EQUIPMENT MAJOR ASSEMBLY STARBOARD WING REAR SPAR HYDRAULIC EQUIPMENT PART NUMBER	1234567 NOMENCLATURE	CODE	UNITS PER ASSY
205 -14	AN821-6D	•ELBOW -	001-370	1
	AN821-6	•ELBOW -	371-	1
-15	191-58807-915	•LINE ASSY - ALTERNATE AIL• SUR CTL PRESS• UNION AILERON STA 50 TO UNION AIL• STA 60 (AS PER EO 05-5E-6A/52)	001-370	1
	191-58807-1915	•LINE ASSY - ALTERNATE AILERON SURFACE CONTROL PRESSURE UNION AILERON STA 50 TO UNION AILERON STA 60	371-	1
-16	AN815-6D	•UNION -	001-100	1
-17	AN821-6D	•ELBOW -	101-370	1
	AN821-6	•ELBOW -	371-	1
-18	191-58807-17	•LINE ASSY - ALTERNATE AILERON SURFACE CONTROL PRESSURE UNION AIL• STA 60 TO TEE ON HOSE CONN WING STA 242	001-100	1
-19	191-58807-985	•LINE ASSY - ALTERNATE AILERON SURFACE CONTROL PRESSURE UNION AIL• STA 60 TO TEE ON HOSE CONN WING STA 242	101-370	1
	191-58807-1985	•LINE ASSY - ALTERNATE AILERON SURFACE CONTROL PRESSURE UNION AIL• STA 60 TO TEE ON HOSE CONN WING STA 242	371-	1
-20	AN833-6D	•ELBOW -	001-370	1
	AN833-6	•ELBOW -	371-	1
	AN960D916	•WASHER -		1
	AN924-6D	•NUT -		1
-21	191-58807-27	•LINE ASSY - ALTERNATE AIL• SUR CTL RETURN ELBOW O/PNL TO UNION FLAP STA 33	001-370	1
	191-58807-1027	•LINE ASSY - ALTERNATE AIL• SUR CTL RETURN ELBOW O/PNL TO UNION FLAP STA 33	371-	1
-22	AN815-6D	•UNION -	001-370	1
	AN815-6	•UNION -	371-	1
-23	170-58803-25	•LINE ASSY - EMERGENCY AIL• PWR/CTL RETURN UNION FLAP STA 33 TO TEE FLAP STA 84	001-370	1
	170-58803-1025	•LINE ASSY - EMERGENCY AIL• PWR/CTL RETURN UNION FLAP STA 33 TO TEE FLAP STA 84	371-	1
	AN742D8C	•CLAMP -		8
	AN742D6	•CLAMP -		8
	AN520-10R8	•SCREW -		4
	AN365-1032	•NUT -		4
-24	AN815-6D	•UNION -	001-370	1
	AN815-6	•UNION -	371-	1
-25	172-58802-11	•6INE ASSY - ALTERNATE SUR CTL RETURN UNION FLAP STA 88 TO BHD RUN TEE ON RV	001-370	1
	172-58802-1011	•LINE ASSY - ALTERNATE SUR CTL RETURN UNION FLAP STA 88 TO BHD RUN TEE ON RV	371-	1
-26	172-58802-17	•LINE ASSY - ALTERNATE SUR CTL RETURN RV TEE TO ELBOW FLAP STA 51	001-370	1
	172-58802-1017	•LINE ASSY - ALTERNATE SUR CTL RETURN RV TEE TO ELBOW FLAP STA 51	371-	1
	170-14622-37	•FAIRLEAD - HYDRAULIC AILERON EMY LINE		1
	170-14622-40	•FAIRLEAD - HYDRAULIC AILERON EMY LINE		1
	AN520-10R10	•SCREW -		2
	AN365-1032	•NUT -		2
	AN742D6	•CLAMP -	001-370	3
	82648-6	•CLAMP - (ADE) OR	371-	3
	TA6C1	•CLAMP - (TAI)	371-	
	AN515-8R10	•SCREW -	001-370	1
	AN515-8R8	•SCREW -	371-	1
	AN509-8R8	•SCREW -		2
	NAS43DD-3-8	•SPACER -	001-370	1
	BREAKDOWN REWORKED AS PER EO 05-5E-6B/13			

FIGURE AND INDEX NUMBER	GROUP HYDRAULIC EQUIPMENT MAJOR ASSEMBLY STARBOARD WING REAR SPAR HYDRAULIC EQUIPMENT PART NUMBER	1234567 NOMENCLATURE	CODE	UNITS PER ASSY
205 -	2W18-8	•WASHER - PLAIN (NAA)	371-	2
	2W18-10	•WASHER - PLAIN (NAA)	371-	4
	AN365-832	•NUT -		3
	AN509-8R8	•SCREW -		2
-27	AN821-6D	•ELBOW -	001-370	1
	AN821-6	•ELBOW -	371-	1
-28	170-58803-53	•LINE ASSY - EMERGENCY AILERON POWER CONTROL RETURN UNION AILERON STA 50 TO UNION AILERON STA 60	001-100	1
-29	170-58803-953	•LINE ASSY - EMERGENCY AILERON POWER CONTROL RETURN UNION AILERON STA 50 TO UNION AILERON STA 60	101-370	1
	170-58803-1953	•LINE ASSY - EMERGENCY AILERON POWER CONTROL RETURN UNION AILERON STA 50 TO UNION AILERON STA 60	371-	1
-30	AN815-6D	•UNION -	001-100	1
-31	AN821-6D	•ELBOW -	101-370	1
	AN821-6	•ELBOW -	371-	1
-32	170-58803-57	•LINE ASSY - EMERGENCY AILERON PWR/CTL RETURN UNION AILERON STA 60 TO TEE ON HOSE CONNECTING WING STA 242	001-100	1
-33	170-58803-957	•LINE ASSY - EMERGENCY AILERON PWR/CTL RETURN UNION AILERON STA 60 TO TEE ON HOSE CONNECTING WING STA 242	101-370	1
	170-58803-1957	•LINE ASSY - EMERGENCY AILERON PWR/CTL RETURN UNION AILERON STA 60 TO TEE ON HOSE CONNECTING WING STA 242	371-	1
	AN742D8C	•CLAMP -		2
	AN515-8R8	•SCREW -		1
	AN365-832	•NUT -		1
	170-14622-21	•FAIRLEAD - HYDRAULIC AILERON EMY LINE		1
	170-14622-23	•FAIRLEAD - HYDRAULIC AILERON EMY LINE		1
	170-14622-25	•FAIRLEAD - HYDRAULIC AILERON EMY LINE		1
	170-14622-27	•FAIRLEAD - HYDRAULIC AILERON EMY LINE		1
	AN520-10R10	•SCREW -		5
	AN365-1032	•NUT -		5
	170-14622-7	•FAIRLEAD - HYDRAULIC AILERON EMY LINE		1
	170-14622-9	•FAIRLEAD - HYDRAULIC AILERON EMY LINE		1
	AN515-8R8	•SCREW -		2
-34	13A-71812-15	LINE ASSY - ALTERNATE SURFACE CTL RETURN (SEE FIG. 199)		REF
-35	13A-71812-13	LINE ASSY - ALTERNATE SURFACE CTL PRESSURE (SEE FIG. 199)		REF
		-000-		
	BREAKDOWN REWORKED AS PER EO 05-5E-6B/13			

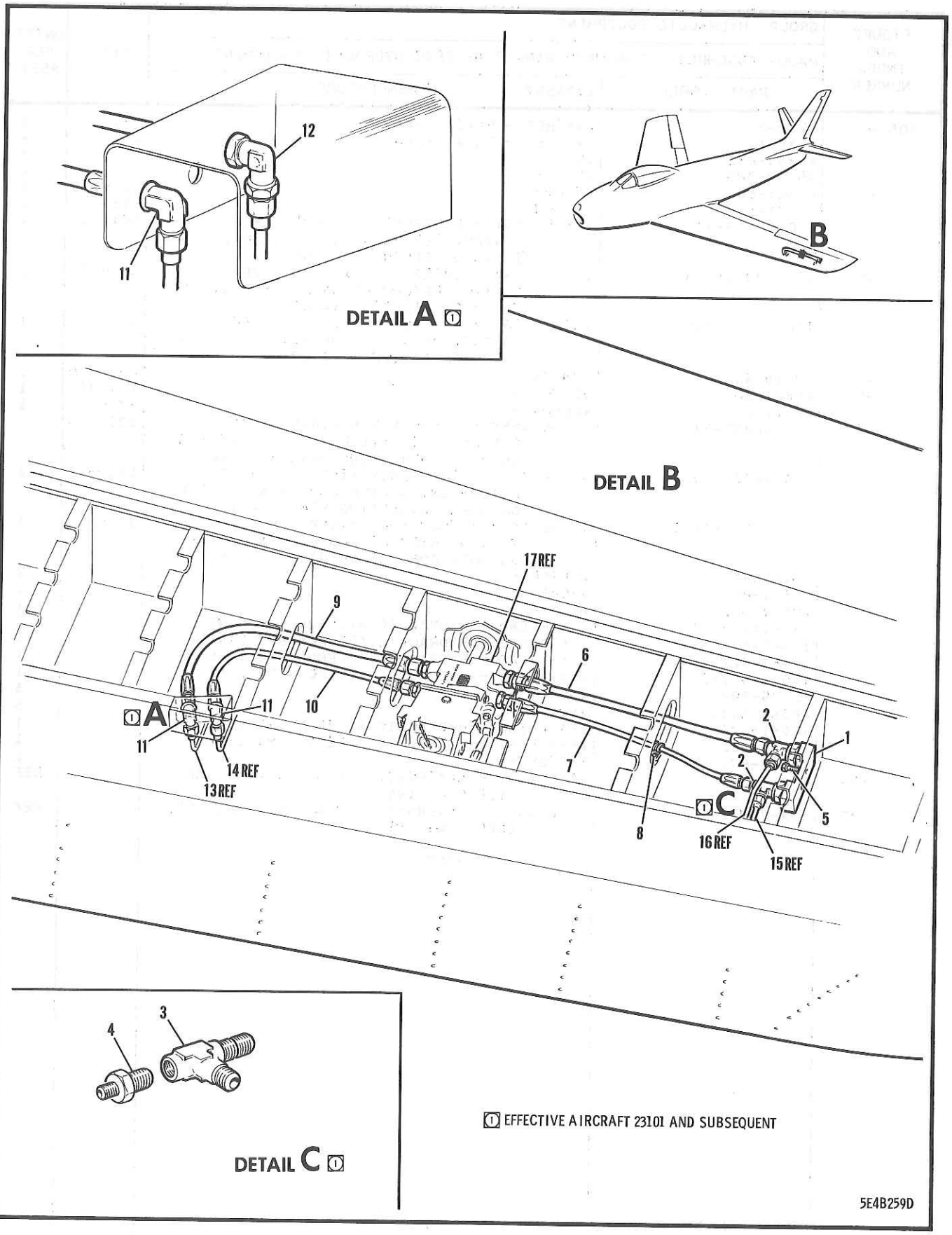

FIGURE 206 OUTER WING SURFACE CONTROL HYDRAULIC EQUIPMENT

FIGURE AND INDEX NUMBER	GROUP HYDRAULIC EQUIPMENT MAJOR ASSEMBLY OUTER WING SURFACE CONTROL HYDRAULIC EQUIPMENT PART NUMBER	1234567 NOMENCLATURE	CODE	UNITS PER ASSY
206 -	170-52014-1	SURFACE CONTROL INSTL - PORT WING OUTER PANEL (SEE SECTION 7)		REF
	170-52014-2	SURFACE CONTROL INSTL - STARBOARD WING OUTER PANEL (SEE SECTION 7)		REF
	165-58789-1	•BLOCK ASSY - HYDRAULIC AILERON ACTUATING CYLINDER HOSE ANCHOR LH	001-100	1
	191-58789-1	•BLOCK ASSY - HYDRAULIC AILERON ACTUATING CYLINDER HOSE ANCHOR LH	101-	1
	165-58789-2	•BLOCK ASSY - HYDRAULIC AILERON ACTUATING CYLINDER HOSE ANCHOR RH	001-100	1
	191-58789-2	•BLOCK ASSY - HYDRAULIC AILERON ACTUATING CYLINDER HOSE ANCHOR RH	101-	1
- 1	165-58788-1	••BLOCK - AILERON ACTUATING CYLINDER HYDRAULIC HOSE ANCHOR LH		1
	165-58788-2	••BLOCK - AILERON ACTUATING CYLINDER HYDRAULIC HOSE ANCHOR RH		1
- 2	AN804-6	••TEE -	001-100	2
- 3	AN784D6	••TEE -	101-370	1
	AN784-6	••TEE - (AS PER EO 05-5E-6B/9)	371-	1
	AN804D6	••TEE -	101-370	1
	AN804-6	••TEE - (AS PER EO 05-5E-6B/13)	371-	1
- 4	AN919-6D	••REDUCER -	101-370	1
	AN919-6	••REDUCER - (AS PER EO 05-5E-6B/9)	371-	1
	AN6289-6	••NUT -		2
	AN6290-6	••GASKET -	001-100	2
	AN6290-6	••GASKET -	101-	3
	AN6291-6	••RING -	001-100	2
	AN6291-6	••RING -	101-	1
- 5	AN4-6A	•BOLT -		2
- 6	165-58791-3	•HOSE ASSY - HYDRAULIC WRAPPED (NORMAL SYSTEM ACTUATING CYLINDER RETURN)	001-100	1
	3H3-6-0170	•HOSE ASSY - PLASTIC COVERED (NAA) (NORMAL SYSTEM ACTUATING CYLINDER RETURN)	101-	1
- 7	165-58791-17	•HOSE ASSY - HYDRAULIC WRAPPED (NORMAL SYSTEM ACTUATING CYLINDER PRESSURE)	001-100	1
	3H3-6-0170	•HOSE ASSY - PLASTIC COVERED (NAA) (NORMAL SYSTEM ACTUATING CYLINDER PRESSURE)	101-300	1
	3H3-4-0170	•HOSE ASSY - PLASTIC COVERED (NAA) (NORMAL SYSTEM ACTUATING CYLINDER PRESSURE)	301-	1
- 8	AN742D18C	•CLAMP -		1
	AN520-10-10	•SCREW -		1
	AN960D10L	•WASHER -		2
	NAS43DD-3-12	•SPACER -		1
	AN364-1032	•NUT -		1
- 9	165-58791-7	•HOSE ASSY - HYDRAULIC WRAPPED (ALTERNATE SYSTEM ACTUATING CYLINDER RETURN)	001-100	1
	3H3-6-0284	•HOSE ASSY - PLASTIC COVERED (NAA) (ALTR SYSTEM ACTUATING CYLINDER RETURN)	101-	1
-10	165-58791-5	•HOSE ASSY - HYDRAULIC WRAPPED (ALTERNATE SYSTEM ACTUATING CYLINDER PRESSURE)	001-100	1
	3H3-6-0234	•HOSE ASSY - PLASTIC COVERED (NAA) (ALTR SYSTEM ACTUATING CYLINDER PRESSURE)	101-	1
-11	AN833-6	•ELBOW - (PORT WING)	001-100	2
	AN833-6D	•ELBOW - (PORT WING)	101-566	1
	AN833-6	•ELBOW - (PORT WING)	567-	1
-12	AN939D4	•ELBOW - (PORT WING)	101-566	1
	AN939-4	•ELBOW - (PORT WING)	567-	1
	AN960D916	•WASHER - (PORT WING)	001-100	2
	2W18-916	•WASHER - FLAT (NAA) (PORT WING)	101-	1
	AN924-6D	•NUT - (PORT WING)	001-100	2

FIGURE AND INDEX NUMBER	GROUP HYDRAULIC EQUIPMENT MAJOR ASSEMBLY OUTER WING SURFACE CONTROL HYDRAULIC EQUIPMENT PART NUMBER	1234567 NOMENCLATURE	CODE	UNITS PER ASSY
206 -	AN924-6D	•NUT - (PORT WING)	101-	1
	AN924-4D	•NUT - (PORT WING)	101-	1
	AN6290-4	•GASKET - (PORT WING)	101-	2
	AN832-4D	•UNION - (PORT WING)	101-566	1
	AN832-4	•UNION - (PORT WING)	567-	1
	AN919-6D	•REDUCER - (PORT WING)	101-566	1
	AN919-6	•REDUCER - (PORT WING)	567-	1
	AN832-6	•UNION - (STARBOARD WING)	A30	2
	AN832-6D	•UNION - (STARBOARD WING)	101-566	2
	AN6290-6	•GASKET - (STARBOARD WING)	101-	1
	AN894-6-4D	•BUSHING - (STARBOARD WING)	101-566	1
	AN894-6-4	•BUSHING - (STARBOARD WING)	567-	1
	AN924-6D	•NUT - (STARBOARD WING)		2
-13	172-58802-956	LINE ASSY - EMERGENCY AILERON PWR/CTL RET (SEE FIG. 203)		REF
-14	191-58807-952	LINE ASSY - EMERGENCY AILERON POWER CONTROL PRESSURE (SEE FIG. 203)		REF
-15	191-58807-7	LINE ASSY - NORMAL AILERON SURFACE CONTROL PRESSURE (SEE FIG. 202)		REF
-16	13A-71851-9	LINE ASSY - NORMAL AILERON SUR CTL PRESSURE (SEE FIG. 202)		REF
-17	165-58705-8131	ACTUATOR ASSY - HYDRAULIC (SEE SECTION 7)		REF
		-000-		

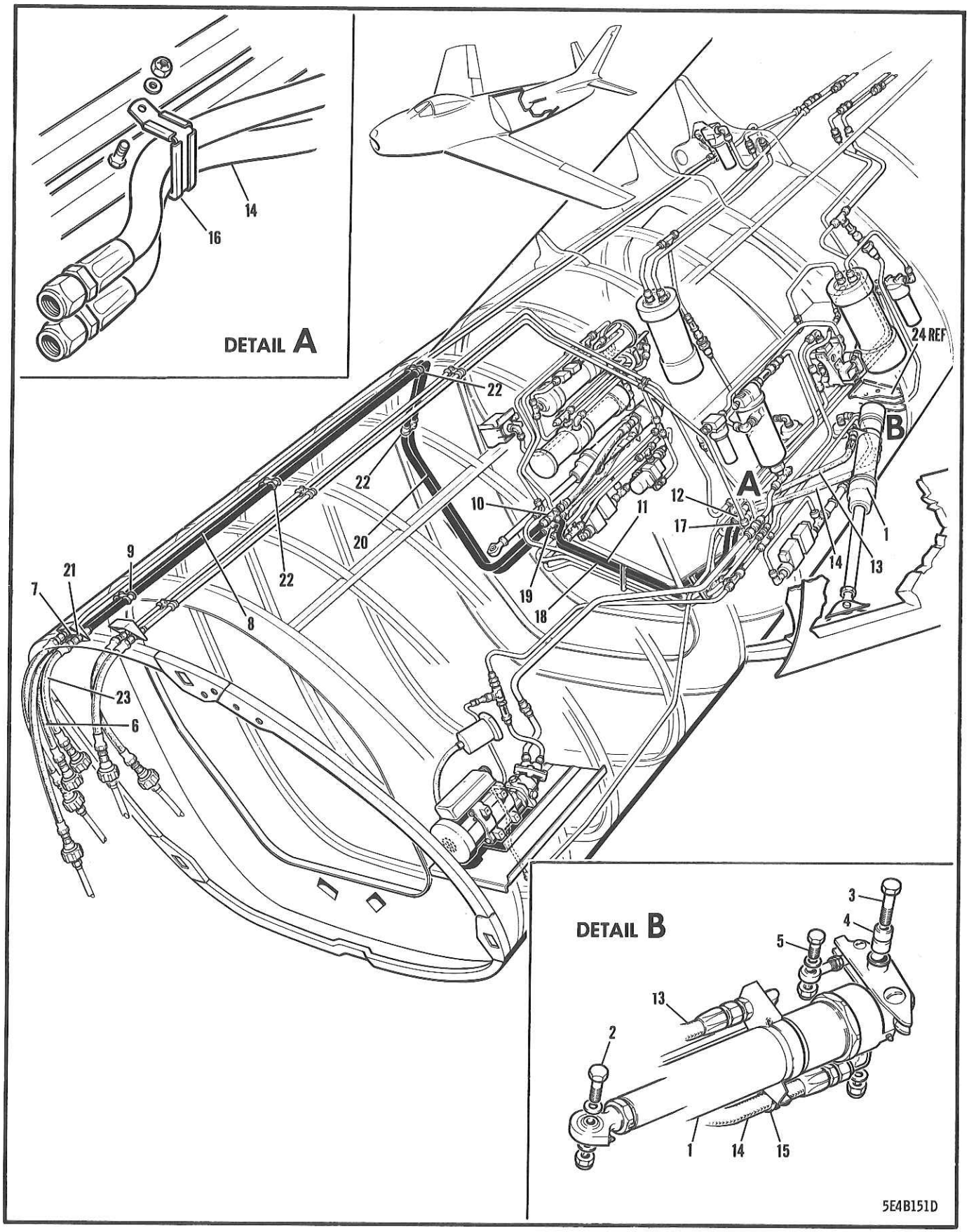

FIGURE 207 REAR FUSELAGE UTILITY HYDRAULIC EQUIPMENT

FIGURE AND INDEX NUMBER	GROUP	HYDRAULIC EQUIPMENT	CODE	UNITS PER ASSY
	MAJOR ASSEMBLY	REAR FUSELAGE UTILITY HYDRAULIC EQUIPMENT		
	PART NUMBER	1234567 NOMENCLATURE		
207 -	13A-71062	HYDRAULIC EQUIP. INSTL - REAR FUSELAGE (SEE SECTION 3)		NP
- 1	151-58644-1	.CYLINDER ASSY - SPEEDBRAKE OPERATING (PORT SIDE) (SEE FIG. 238)		REF
	151-58644-9	.CYLINDER ASSY - SPEEDBRAKE OPERATING (STARBOARD SIDE) (SEE FIG. 238)		REF
- 2	AN9-15A	.BOLT - MPI (CYLINDER END TO DOOR ATT)		2
	AN960D916	.WASHER -		6
	AN365-918	.NUT -		2
- 3	AN7-27A	.BOLT - MPI (CYLINDER TO BRACKET ATTACHING)		2
- 4	NAS72-7-113	.BUSHING -		2
	AN960D716	.WASHER -		2
	AN365-720	.NUT -		2
- 5	AN5-10A	.BOLT - MPI (CYLINDER TO SPEEDBRAKE DOOR LATCH ATTACHING)		2
	AN960D516L	.WASHER -		2
	AN365-524	.NUT -		2
- 6	AN6292-8-22	.HOSE ASSY - HYD & PNEU HIGH PRESS. SWIVEL CONNECTING (SPEEDBRAKE CLOSE)		1
		OR		
	068001-8-22	.HOSE ASSY - (AQC) (HIGH PRESSURE)		
	13A-71120-6	.TAG - HYDRAULIC REAR DISCONNECT HOSE IDENT		1
	150-S1-8	.COUPLING HALF - HOSE SELF-SEALING (AQC)		1
	155-25-8	.NUT - COUPLING UNION (AQC)		1
- 7	AN832-8D	.UNION -		1
	AN960D1216	.WASHER -		1
	AN924-8D	.NUT -		1
- 8	13A-71823-5	.LINE ASSY - SPEEDBRAKE CLOSE (DISCONNECT ELBOW STA 238 TO BHD TEE STA 298 STARBOARD SIDE)		1
- 9	13A-71231	.FAIRLEAD ASSY - SPEEDBRAKE LINE STARBOARD SIDE UPPER FRAME		1
	AN520-10R10	.SCREW -		2
	AN960-10	.WASHER -		2
	AN365-1032	.NUT -		2
-10	AN784-6	.TEE -		1
	AN6290-6	.GASKET -		1
	AN919-12	.REDUCER -		1
	AN960D916	.WASHER -		2
	AN924-6D	.NUT -		1
-11	13A-71823-7	.LINE ASSY - SPEEDBRAKE CLOSE (TEE STA 298 STARBOARD SIDE TO UNION STA 298 PORT SIDE)		1
-12	AN832-6	.UNION -		1
	AN960D916	.WASHER -		1
	AN924-6D	.NUT -		1
-13	13A-71062-900	.HOSE ASSY - (SPEEDBRAKE CLOSE) (AS PER EO 05-5E-6A/236)		2
-14	13A-71062-901	.HOSE ASSY - (SPEEDBRAKE OPEN) (AS PER EO 05-5E-6A/236)		2

FIGURE AND INDEX NUMBER	GROUP / MAJOR ASSEMBLY / PART NUMBER	HYDRAULIC EQUIPMENT / REAR FUSELAGE UTILITY HYDRAULIC EQUIPMENT / 1234567 NOMENCLATURE	CODE	UNITS PER ASSY
207 -15	AN742D16C	•CLAMP -		2
	AN520-10R8	•SCREW -		2
	AN365-1032	•NUT -		2
-16	172-58183	•CLAMP - SPEEDBRAKE CYLINDER HYD HOSE SUP•		2
	AN3-3A	•BOLT - (HOSE CLAMP ATTACHING)		4
	AN960D10L	•WASHER -		4
	AN365-1032	•NUT -		4
-17	AN832-6	•UNION -		1
	AN960D916	•WASHER -		1
	AN924-6D	•NUT -		1
-18	13A-71823-9	•LINE ASSY - SPEEDBRAKE OPEN (TEE STA 298 STARBOARD SIDE TO UNION STA 298 PORT SIDE)		1
-19	AN784-6	•TEE -		1
	AN6290-6	•GASKET -		1
	AN919-12	•REDUCER -		1
	AN960D916	•WASHER -		2
	AN924-6D	•NUT -		1
-20	13A-71823-3	•LINE ASSY - SPEEDBRAKE OPEN (DISCONNECT ELBOW STA 238 STARBOARD SIDE TO TEE STA 298 PORT SIDE)		1
-21	AN832-8D	•UNION -		1
	AN960D1216	•WASHER -		1
	AN924-8D	•NUT -		1
-22	AN742D10C	•CLAMP -		6
	AN520-10R8	•SCREW -		3
	AN365-1032	•NUT -		3
-23	AN6292-8-16-3/4	•HOSE ASSY - HYD & PNEU HIGH PRESS• SWIVEL CONNECTING (SPEEDBRAKE OPEN)		1
		OR		
	068001-8-16 3/4	•HOSE ASSY - HIGH PRESSURE (AQC)		
		OR		
	062001-8-16 3/4	•HOSE ASSY - HIGH PRESSURE (ACB)		
	13A-71120-8	•TAG - HYDRAULIC REAR DISCONNECT HOSE IDENT		1
	150-S1-8	•COUPLING HALF - HOSE SELF-SEALING (AQC)		1
	155-25-8	•NUT - COUPLING UNION (AQC)		1
-24	140-39046-5	BRACKET - SPEEDBRAKE LOCK UP• (PORT SIDE) (SEE SECTION 3)		REF
		(CONTINUED SEE FIG• 208)		

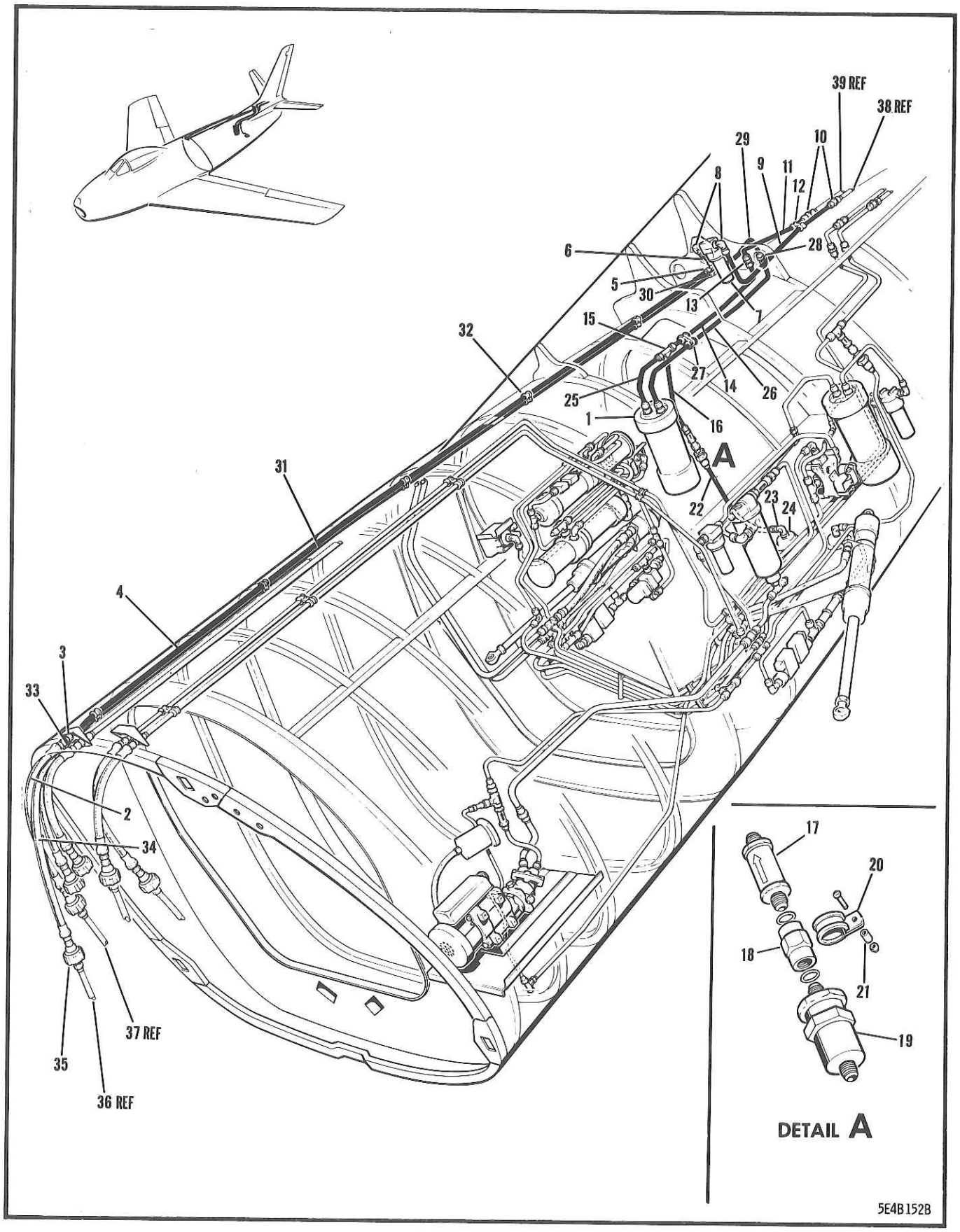

FIGURE 208 REAR FUSELAGE NORMAL HYDRAULIC EQUIPMENT

FIGURE AND INDEX NUMBER	GROUP HYDRAULIC EQUIPMENT MAJOR ASSEMBLY REAR FUSELAGE NORMAL HYDRAULIC EQUIPMENT PART NUMBER	1234567 NOMENCLATURE	CODE	UNITS PER ASSY
208 -	13A-71062	HYDRAULIC EQUIP. INSTL - REAR FUSELAGE (SEE FIG. 207)		REF
- 1	172-58610	•COMPENSATOR ASSY - HYDRAULIC POWER CONTROL (SEE FIG. 237)		REF
	325-625-600-S	•CLAMP - T-BOLT STAINLESS STEEL (MPC) (COMPENSATOR ATTACHING)	001-300	2
	325-63-600-SH	•CLAMP - T-BOLT STAINLESS STEEL (MPC) (COMPENSATOR ATTACHING)	301-	2
- 2	AN6292-6-27	•HOSE ASSY - HYD & PNEU HIGH PRESS. SWIVEL CONNECTING (NORMAL PRESSURE)		1
	13A-71120-4	•TAG - HYDRAULIC REAR DISC.HOSE INSTL IDENT		1
	150-S1-6	•COUPLING HALF - HOSE SELF-SEALING (AQC)		1
	155-25-8	•NUT - COUPLING UNION (AQC)		1
- 3	AN832-6	•UNION -		1
	AN924-6D	•NUT -		1
- 4	13A-71824-3	•LINE ASSY - NORMAL SURFACE CONTROL PRESS. (DISCONNECT FUSELAGE BREAK TO ELBOW STA 345 STARBOARD SIDE)		1
- 5	AN821-6	•ELBOW -		1
- 6	170-58814-49	•LINE ASSY - NORMAL POWER CONTROL PRESSURE (ELBOW STA 345 TO FILTER STBD SIDE)		1
	170-58656-5	•FILTER ASSY - HYDRAULIC POWER CONTROL 6-TUBE SIZE (STARBOARD SIDE)		1
- 7	MS28720-6	••FILTER - 3000-PSI HYDRAULIC LINE TYPE		1
- 8	AN833-6	••ELBOW -		2
	AN6289-6	••NUT -		2
	AN6290-6	••GASKET -		2
	AN6291-6	••RING -		2
	AN4-25A	•BOLT - (FILTER ATTACHING)		2
	NAS43DD-4-40	•SPACER -		2
- 9	170-58814-51	•LINE ASSY - NORMAL POWER CONTROL PRESSURE (FILTER TO FLOW REGULATOR STBD SIDE)		1
-10	AN815-6	•UNION -		2
-11	170-58814-35	•LINE ASSY - NORMAL POWER CONTROL RETURN (FLOW REGULATOR TO UNION STA 350 OUTBOARD STARBOARD SIDE)		1
-12	AN742D8C	•CLAMP -		2
	AN520-10R8	•SCREW -		1
	AN365-1032	•NUT -		1
-13	AN832-6	•UNION -		1
	AN960D916	•WASHER -		1
	AN924-6D	•NUT -		1
-14	172-58821-69	•LINE ASSY - NORMAL POWER CONTROL STAB. RET (UNION STA 350 TO TEE STA 340)		1
-15	AN824-6	•TEE -		1
-16	13A-71824-11	•LINE ASSY - NORMAL SURFACE CONTROL RETURN (TEE STA 345 TO CV STARBOARD SIDE)		1
-17	AN6249-6	•VALVE - 3000-PSI HYDRAULIC CHECK (STBD)		1
	AN6290-6	•GASKET -		2
-18	NAS424-6	•COUPLING -		1
-19	38390	•FILTER - (PUR) (HYDRAULIC OIL) (STBD SIDE)		1
-20	AN742D15C	•CLAMP -		1
-21	NAS43DD-3-32	•SPACER -		1
	AN520-10R16	•SCREW -		1
	AN365-1032	•NUT -		1
-22	172-58821-65	•LINE ASSY - NORMAL POWER CONTROL RETURN (DISC. STA 335 TO FILTER STBD SIDE)		1
	AN815-6	•UNION -		1
	AN6289-6	•NUT -		1
-23	AN927-6	•ELBOW -		1

FIGURE AND INDEX NUMBER	GROUP HYDRAULIC EQUIPMENT MAJOR ASSEMBLY REAR FUSELAGE NORMAL HYDRAULIC EQUIPMENT PART NUMBER	1234567 NOMENCLATURE	CODE	UNITS PER ASSY
208 -	AN6290-6	•GASKET -		2
	AN6291-6	•RING -		1
-24	155-S11-6	•COUPLING HALF - HOSE SELF-SEALING (AQC) (WITH DUST-CAP & CHAIN) (STBD SIDE)		1
	AN3-4A	•BOLT - (COUPLING TO BRACKET ATTACHING)		3
	AN365-1032	•NUT -		3
	AN520-10R8	•SCREW - (CAP CHAIN TO CUP ATTACHING)		1
	AN365-1032	•NUT -		1
-25	172-58822-31	•LINE ASSY - NORMAL POWER CONTROL RETURN (TEE STA 340 TO UNION ON COMPTR)		1
-26	172-58821-71	•LINE ASSY - NORMAL POWER CONTROL RETURN (COMPTR STBD SIDE TO UNION STA 350)		1
-27	AN742D8C	•CLAMP -		3
	AN520-10R8	•SCREW -		2
	AN365-1032	•NUT -		2
-28	AN832-6	•UNION -		1
	AN960D916	•WASHER -		1
	AN924-6D	•NUT -		1
-29	170-58814-57	•LINE ASSY - NORMAL POWER CONTROL RETURN (UNION STA 345 STARBOARD SIDE)		1
-30	AN815-6	•UNION -		1
-31	13A-71824-5	•LINE ASSY - NORMAL SURFACE CONTROL RETURN (UNION STA 345 TO DISCONNECT FUS BREAK STARBOARD SIDE)		1
-32	AN742D8C	•CLAMP -		10
	AN742D12C	•CLAMP -		5
	755-6-2-6	•CLIP - INTEGRALLY BONDED SUPPORT (ADE)		4
	755-10-2-8	•CLIP - INTEGRALLY BONDED SUPPORT (ADE)		2
	AN520-10R10	•SCREW -		6
	AN365-1032	•NUT -		6
-33	AN832-6	•UNION -		1
	AN924-6D	•NUT -		1
-34	3H3-6-0283	•HOSE ASSY - PLASTIC COVERED (NAA) (NORMAL RETURN)		1
	13A-71120-2	•TAG - HYD REAR DISCONNECT HOSE INSTL IDENT		1
-35	150-S1-6	•COUPLING HALF - HOSE SELF-SEALING (AQC)		1
	155-25-8	•NUT - COUPLING UNION (AQC)		1
-36	13A-71821-9	LINE ASSY - NORMAL SURFACE CONTROL RETURN (SEE FIG. 198)		REF
-37	13A-71821-7	LINE ASSY - NORMAL SURFACE CONTROL PRESSURE (SEE FIG. 198)		REF
-38	170-58799-63	LINE ASSY - POWER CONTROL PRESSURE (SEE FIG. 212)		REF
-39	170-58799-61	LINE ASSY - PWR/CTL RETURN (SEE FIG. 212)		REF
		(CONTINUED SEE FIG. 209)		

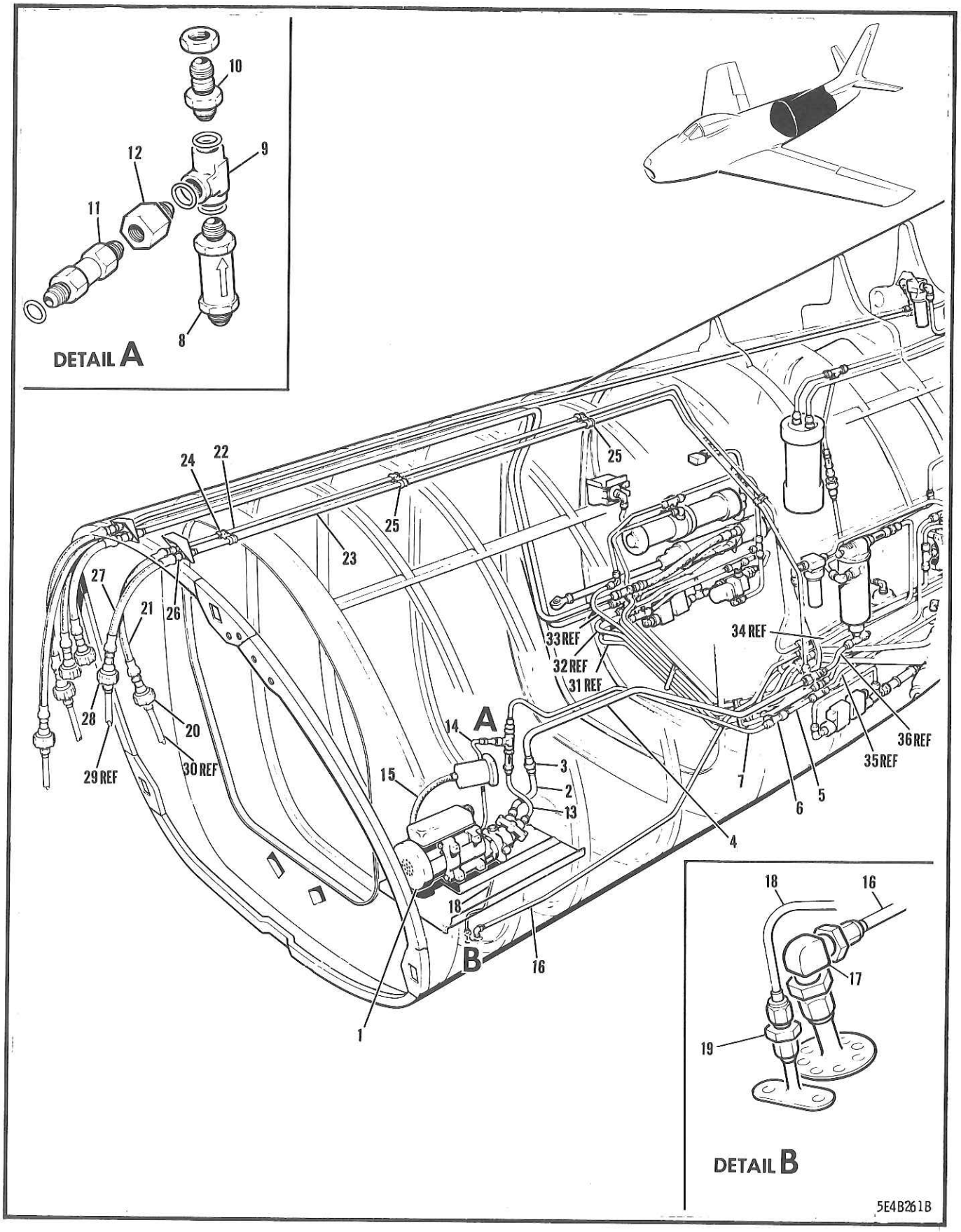

FIGURE 209 PORT SIDE STA 244-298 ALTERNATE HYDRAULIC EQUIPMENT

FIGURE AND INDEX NUMBER	GROUP HYDRAULIC EQUIPMENT MAJOR ASSEMBLY PORT SIDE STA 244-298 ALTERNATE HYDRAULIC PART NUMBER	1234567 NOMENCLATURE	CODE	UNITS PER ASSY
209 -	13A-71062	HYDRAULIC EQUIP. INSTL - REAR FUSELAGE (SEE FIG. 207)		REF
- 1	172-58601-805	.PUMP ASSY - HYDRAULIC EMY POWER CONTROL (SEE FIG. 236)		REF
	AN520-10R10	.SCREW - (PUMP TO TRAY ATTACHING)		2
- 2	13A-71814-23	.LINE ASSY - ALTERNATE SURFACE CTL SUCTION (PUMP TO UNION STA 257)		1
- 3	AN815-8D	.UNION -		1
- 4	13A-71814-21	.LINE ASSY - ALTERNATE SUR CTL PUMP SUCTION (ELBOW STA 257 TO UNION STA 298)		1
	AN742D10C	.CLAMP -		1
	NAS43DD-3-64	.SPACER -		1
	AN520-10R20	.SCREW -		1
	AN365-1032	.NUT -		1
	AN742D10C	.CLAMP -		3
	AN742D8C	.CLAMP -		2
	AN530-10R8	.SCREW -		4
	AN365-1032	.NUT -		4
- 5	13A-71814-29	.LINE ASSY - ALTERNATE SURFACE CTL PRESSURE (FITTING STA 298 TO TEE STA 295)		1
- 6	AN824-6	.TEE -		1
- 7	13A-71814-15	.LINE ASSY - ALTERNATE SURFACE CTL PRESSURE (TEE STA 290 TO CHECK VALVE & TEE)		1
- 8	AN6249-6	.VALVE - 3000-PSI HYDRAULIC CHECK (PORT)		1
	AN6290-6	.GASKET -		3
- 9	AN926-6	.TEE -		1
	AN924-6D	.NUT -		1
-10	AN832-6	.UNION -		1
-11	114162	.SNUBBER - (OMS) (RAY PRESSURE MODEL 11D-2)		1
-12	AN893-2	.BUSHING -		1
	AN6290-4	.GASKET -		1
-13	13A-71814-27	.LINE ASSY - ALTERNATE SURFACE CTL PRESSURE CHECK VALVE ON COMPT FLOOR TO PUMP		1
-14	13A-71814-33	.LINE ASSY - ALTERNATE SURFACE CTL PRESSURE (FITTING & RESTRICTOR TO FITTING)		1
	AN832-4	.UNION - (HOSE TO PUMP)		1
	AN924-4D	.NUT -		1
-15	MS28741-4-0180	.HOSE ASSY - MEDIUM PRESSURE DTCH END FTG (PUMP TO TRANSMITTER)		1
-16	13A-71814-25	.LINE ASSY - ALTERNATE SURFACE CTL DRAIN (UNION STA 298 TO TEE STA 260)	001-210	1
	13A-71814-57	.LINE ASSY - ALTERNATE SURFACE CTL DRAIN (UNION STA 298 TO TEE STA 260)	211-	1
	AN742D8C	.CLAMP -		2
	AN520-10R8	.SCREW -		2
	AN365-1032	.NUT -		2
-17	AN939-6D	.ELBOW - (AS PER EO 05-5E-6A/84)		1
	AN815-6D	.UNION - (AS PER EO 05-5E-6A/84)		1
	AN6290-6	.GASKET - (AS PER EO 05-5E-6A/84)		1
	AN919-12D	.REDUCER - (AS PER EO 05-5E-6A/84)		1
-18	13A-71814-83	.LINE ASSY - ALTERNATE SURFACE CTL DRAIN (PUMP TO OVERBOARD) (AS PER EO 05-5E-6A/84)		1
-19	AN919-2	.REDUCER - (AS PER EO 05-5E-6A/84)		1
	AN6290-6	.GASKET - (AS PER EO 05-5E-6A/84)		1
-20	150-S1-6	.COUPLING HALF - HOSE SELF-SEALING (AQC)		1
	155-25-8	.NUT - COUPLING UNION (AQC)		1
-21	AN6292-6-14-5/8	.HOSE ASSY - HYD & PNEU HIGH PRESS. SWIVEL CONNECTING (ALTERNATE PRESSURE) (AS PER EO 05-5E-6A/78)		1

FIGURE AND INDEX NUMBER	GROUP / MAJOR ASSEMBLY / PART NUMBER	HYDRAULIC EQUIPMENT / PORT SIDE STA 244-298 ALTERNATE HYDRAULIC / 1234567 NOMENCLATURE	CODE	UNITS PER ASSY
209 -	3H3C-8-14-5/8	•COVER - (NAA)		1
	13A-71120-3	•TAG - HYDRAULIC REAR DISCONNECT HOSE IDENT		1
	AN832-6	•UNION -		1
	AN924-6D	•NUT -		1
-22	13A-71814-3	•LINE ASSY - ALTERNATE SURFACE CTL PRESSURE (UNION STA 298 TO FUSELAGE BREAK)		1
-23	13A-71814-7	•LINE ASSY - ALTERNATE SURFACE CTL RETURN (FUSELAGE BREAK TO TEE STA 296)	A37	1
	13A-71814-47	•LINE ASSY - ALTERNATE SURFACE CTL RETURN (FUSELAGE BREAK TO TEE STA 296)	211-229	1
-24	13A-71123	•FAIRLEAD ASSY - ALTERNATE SURFACE CONTROL LINE PORT SIDE TOP STA 245		1
	AN520-10R10	•SCREW -		2
	AN960-10	•WASHER -		2
	AN365-1032	•NUT -		2
-25	AN742D10C	•CLAMP -		2
	AN742D8C	•CLAMP -		8
	AN520-10R8	•SCREW -		5
	AN365-1032	•NUT -		5
-26	AN832-6D	•UNION -	001-370	1
	AN832-6	•UNION - (AS PER EO 05-5E-6B/13)	371-	1
	AN924-6D	•NUT -		1
-27	3H3-6-0157	•HOSE ASSY - PLASTIC COVERED (NAA) (ALTERNATING RETURN)		1
	13A-71120-1	•TAG - HYDRAULIC REAR DISCONNECT HOSE IDENT		1
-28	150-S1-6	•COUPLING HALF - HOSE SELF-SEALING (AQC)		1
	155-25-8	•NUT - COUPLING UNION (AQC)		1
-29	13A-71812-23	LINE ASSY - ALTERNATE SURFACE CONTROL RET (SEE FIG. 199)		REF
-30	13A-71812-29	LINE ASSY - ALTERNATE SURFACE CTL PRESSURE (SEE FIG. 199)		REF
-31	13A-71814-5	LINE ASSY - ALTERNATE SURFACE CTL PRESSURE (SEE FIG. 211)		REF
-32	13A-71814-11	LINE ASSY - ALTERNATE SURFACE CONTROL RET (SEE FIG. 211)		REF
-33	13A-71814-9	LINE ASSY - ALTERNATE SURFACE CONTROL RET (SEE FIG. 211)		REF
-34	172-58822-25	LINE ASSY - EMERGENCY POWER CONTROL DRAIN (SEE FIG. 210)		REF
-35	172-58822-951	LINE ASSY - ALTERNATE SURFACE CTL PRESSURE (SEE FIG. 210)		REF
-36	172-58823-19	LINE ASSY - EMERGENCY SUR CTL PUMP SUCTION (SEE FIG. 210)		REF

(CONTINUED SEE FIG. 210)

W53

ROYAL CANADIAN AIR FORCE

EO 05-5E-4
16 Jan 59

Vol 2

ADVANCE REVISION

Serial #10 dated 24 Mar 61
(Sheet 1 of 1)

(This Advance Revision replaces Advance Revision Serial #2)

The sheet of this Advance Revision is to be inserted in the EO as follows:-

Sheet 1 facing page 938

FIGURE and INDEX NUMBER	GROUP / MAJOR ASSEMBLY / PART NUMBER	1 2 3 4 5 6 7 NOMENCLATURE	Units Per Assy	Usage on Code
	13A 71120-3	Delete at top of page. Tag - hydraulic rear disconnect hose ident.		
	13A 71120-1	After item 27 delete Tag - hydraulic rear disconnect hose identification		

ISSUED ON AUTHORITY OF THE CHIEF OF THE AIR STAFF

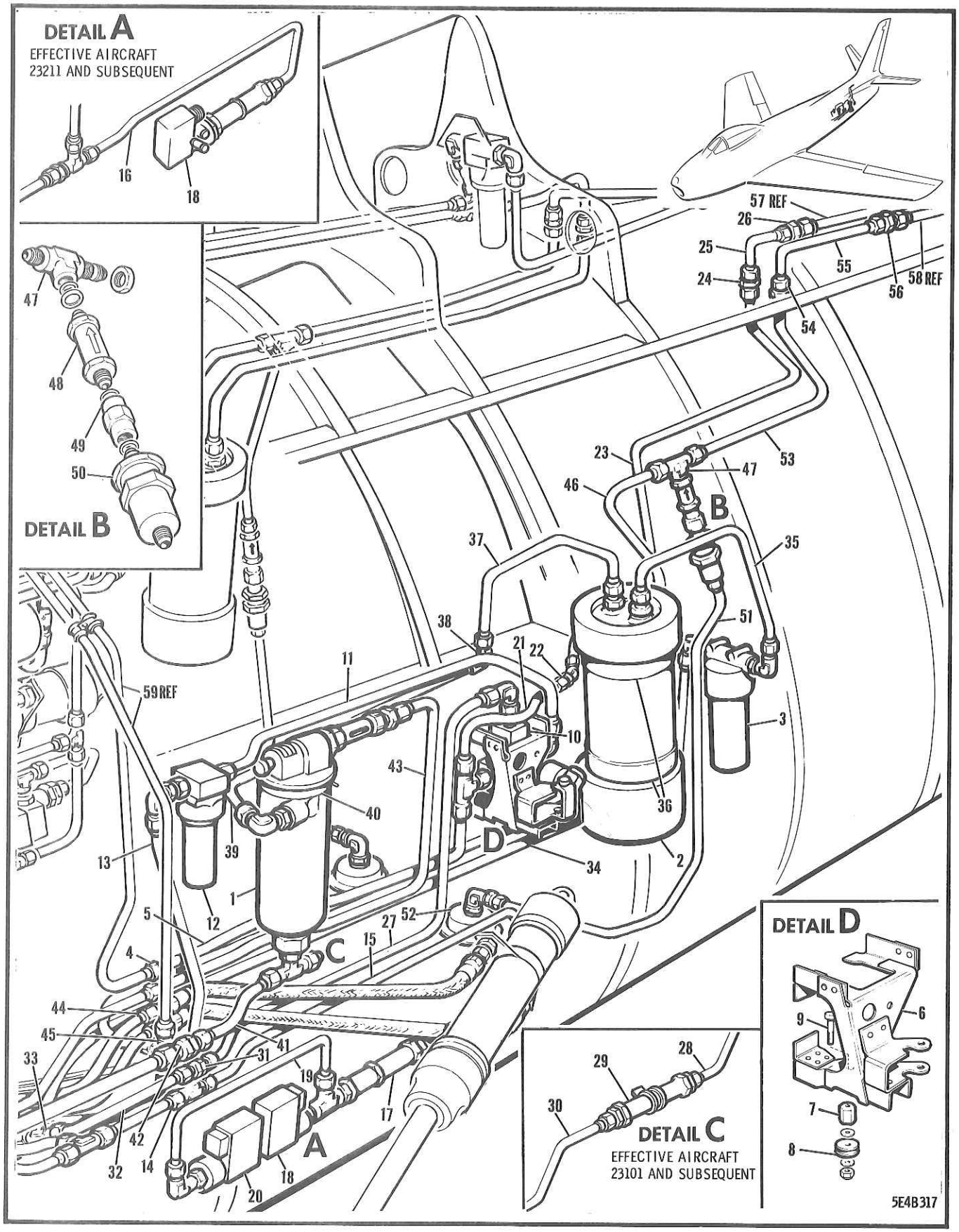

FIGURE 210 PORT SIDE STA 298-363 ALTERNATE HYDRAULIC EQUIPMENT

FIGURE AND INDEX NUMBER	GROUP HYDRAULIC EQUIPMENT MAJOR ASSEMBLY PORT SIDE STA 298-363 ALTERNATE HYDRAULIC PART NUMBER	1234567 NOMENCLATURE	CODE	UNITS PER ASSY
210 -	13A-71062	HYDRAULIC EQUIP. INSTL - REAR FUSELAGE (SEE FIG. 207)		REF
- 1	172-58629-3	.RESERVOIR ASSY - HYDRAULIC EMY PWR/CTL (SEE FIG. 240)		REF
- 2	172-58610	.COMPENSATOR ASSY - POWER CONTROL (SEE FIG. 237)		REF
- 3	172-58630	.FILTER ASSY - HYDRAULIC EMY POWER CONTROL (SEE FIG. 230)		REF
	NAS43DD-3-40	.SPACER -		1
	NAS43DD-3-43	.SPACER -		1
	AN4-25A	.BOLT - (HYDRAULIC EMERGENCY POWER CONTROL FILTER TO BRACKET ATTACHING)		2
- 4	AN832-6	.UNION -		1
	AN960D916	.WASHER -		1
	AN924-6D	.NUT -		1
- 5	172-58821-29	.LINE ASSY - EMERGENCY POWER CONTROL AIL. PRESS. (SOL VALVE TO UNION STA 298)		1
	172-52047	.BRACKET ASSY - SURFACE CONTROL MANUAL EMERGENCY CHANGE-OVER (PORT SIDE)	001-210	1
- 6	165-52041	..BRACKET ASSY - SURFACE CONTROL MANUAL EMERGENCY CHANGE-OVER	001-210	1
- 7	172-52088	..SUPPORT - SURFACE CONTROL MANUAL EMERGENCY CHANGE-OVER CAM	001-210	1
- 8	FL3C3	..BALL-BEARING - DEEP GROOVE METAL SHIELDED (FBC) (FAIRLEAD)	001-210	1
- 9	AN3-14A	..BOLT -	001-210	1
	AN960-10	..WASHER -	001-210	AR
	AN960-10L	..WASHER -	001-210	AR
	AN960D10	..WASHER -	001-210	1
	AN365-1032	..NUT -	001-210	1
-10	13A-71308	.VALVE ASSY - ALTERNATE SURFACE CONTROL SHUT-OFF (PORT SIDE)		1
	13-1054	..VALVE - HYDRAULIC SOLENOID PILOT OPERATED 3-WAY 2-POSITION SELECTOR (PII)		1
	AN833-6	..ELBOW -		2
	AN834-6	..TEE -		1
	AN6290-6	..GASKET -		3
	AN6291-6	..WASHER -		3
	AN6289-6	..NUT -		3
	AN4-7A	.BOLT - (VALVE ATTACHING)		3
	AN960D416	.WASHER -	211-	3
-11	172-58821-15	.LINE ASSY - EMERGENCY POWER CONTROL PRESS. (FILTER TO SOLENOID VALVE)		1
-12	172-58637	.FILTER ASSY - HYDRAULIC ALTERNATE SURFACE CONTROL FORWARD (PORT SIDE)		1
	MS28720-6	..FILTER - HYDRAULIC LINE TYPE 3000 PSI		1
	AN6290-6	..GASKET -		1
	AN6291-6	..WASHER -		1
	AN6289-6	..NUT -		1
	AN833-6	..ELBOW -		1
	AN6290-6	..GASKET -		1
	AN815-6	..UNION -		1
	AN4-20A	.BOLT - (FILTER ATTACHING)		2
	AN742D28C	.CLAMP - (FILTER ATTACHING)		1
	AN520-10R10	.SCREW -		1
	AN365-1032	.NUT -		1
-13	172-58823-21	.LINE ASSY - EMERGENCY SURFACE CTL PRESSURE (FILTER TO TEE STA 298)		1
-14	AN804-6	.TEE -		1
	AN960D916	.WASHER -		1

FIGURE AND INDEX NUMBER	GROUP HYDRAULIC EQUIPMENT MAJOR ASSEMBLY PORT SIDE STA 298-363 ALTERNATE HYDRAULIC PART NUMBER	1234567 NOMENCLATURE	CODE	UNITS PER ASSY
210 -	AN924-6D	•NUT -		1
-15	172-58822-951	•LINE ASSY - ALTERNATE SURFACE CTL PRESSURE (TEE STA 298 TO CHECK VALVE REAR SW)	001-210	1
-16	13A-71814-81	•LINE ASSY - ALTERNATE SURFACE CTL PRESSURE (TEE STA 298 TO SWITCH RESTRICTOR)	211-	1
-17	1V7-2-30	•VALVE ASSY - HYDRAULIC 2-WAY RESTR (NAA) (FOR BREAKDOWN SEE EO 15-71BB/4)		1
	AN919-6	•REDUCER -	001-210	2
	AN919-6	•REDUCER -	211-	1
	AN6290-4	•GASKET -	001-210	2
	AN6290-4	•GASKET -	211-	1
	AN6290-6	•GASKET -	001-210	2
-18	172-58624-809	•SWITCH ASSY - ALTERNATE SURFACE CONTROL PRESSURE (PORT SIDE)	001-210	1
	172-58624-817	•SWITCH ASSY - ALTERNATE SURFACE CONTROL PRESSURE (PORT SIDE)	211-	1
	90100-1	••SWITCH - (HRM) (HYDRAULIC PRESSURE)	001-210	1
		OR		
	29100-1	••SWITCH - HYDRAULIC PRESSURE (HRM)	001-210	
		OR		
	4000-16	••SWITCH - HYDRAULIC PRESSURE (FBK)	001-210	
	90100-4	••SWITCH - (HRM) (HYDRAULIC PRESSURE)	211-	1
		OR		
	50002-3	••SWITCH - (CDP) (PRESSURE)	211-	
		OR		
	31100-3	••SWITCH - HYDRAULIC PRESSURE (HDA)	211-	
		OR		
	5000-26	••SWITCH - HYDRAULIC PRESSURE (FBK)	211-	
	AN784-6	••TEE -	001-210	1
	AN919-6	••REDUCER -	211-	1
	AN6290-6	••GASKET -		1
	AN6291-6	••RING -	001-210	1
	AN6289-6	••NUT -	001-210	1
	AN3-17A	•BOLT -	001-210	1
	AN3-17A	•BOLT -		1
	2L7-2	•LUG - SAFETY (NAA)	211-	1
-19	172-58821-11	•LINE ASSY - EMERGENCY POWER CONTROL PRESS• (REAR SWITCH TO ELBOW AT FWD SWITCH)	001-210	1
-20	172-58624-803	•SWITCH ASSY - ALTERNATE SURFACE CONTROL PRESSURE (PORT SIDE)	001-030	1
	172-58624-815	•SWITCH ASSY - ALTERNATE SURFACE CONTROL PRESSURE (PORT SIDE)	031-210	1
	5000-26	••SWITCH - HYDRAULIC PRESSURE (FBK) (AS PER EO 05-5E-6A/87)	001-030	1
	90100-4	••SWITCH - (HRM) (HYDRAULIC PRESSURE)	031-210	1
		OR		
	50002-3	••SWITCH - (CDP) (PRESSURE)	031-210	
		OR		
	31100-3	••SWITCH - HYDRAULIC PRESSURE (HDA)	031-210	
		OR		
	3000-26	••SWITCH - HYDRAULIC PRESSURE (FBK)	031-210	
		OR		
	5000-26	••SWITCH - HYDRAULIC PRESSURE (FBK)	031-210	
	AN833-6	••ELBOW -	001-210	1
	AN6290-6	••GASKET -	001-210	1
	AN6291-6	••RING -	001-210	1
	AN6289-6	••NUT -	001-210	1
	AN3-17A	•BOLT -	001-210	2
	2L7-2	•LUG - SAFETY (NAA)	001-210	1
-21	172-58821-35	•LINE ASSY - EMERGENCY POWER CONTROL STAB• PRESSURE (SOLENOID TO ELBOW STA 327)		1

FIGURE AND INDEX NUMBER	GROUP HYDRAULIC EQUIPMENT MAJOR ASSEMBLY PORT SIDE STA 298-363 ALTERNATE HYDRAULIC PART NUMBER	1234567 NOMENCLATURE	CODE	UNITS PER ASSY
210 -22	AN837-6	•ELBOW -		1
	AN960D916	•WASHER -		1
	AN924-6D	•NUT -		1
-23	172-58821-37	•LINE ASSY - EMERGENCY POWER CONTROL PRESS• (ELBOW STA 327 TO UNION STA 350)		1
	AN742D8C	•CLAMP -		3
	AN520-10R8	•SCREW -		2
	AN365-1032	•NUT -		2
-24	AN832-6	•UNION -		1
	AN960D916	•WASHER -		1
	AN924-6D	•NUT -		1
-25	170-58814-61	•LINE ASSY - EMERGENCY POWER CONTROL PRESS• (UNION INBOARD STA 350 TO FLOW RGLR)		1
-26	AN815-6	•UNION -		1
-27	172-58821-55	•LINE ASSY - EMERGENCY POWER CONTROL RETURN (UNION STA 298 TO 3-WAY VALVE)	001-100	1
-28	172-58823-27	•LINE ASSY - EMERGENCY SURFACE CTL RETURN (RESTRICTOR TO 3-WAY VALVE)	101-210	1
	13A-71814-77	•LINE ASSY - ALTERNATE SURFACE CTL RETURN (RESTRICTOR TO 3-WAY VALVE)	211-370	1
	13A-71814-1077	•LINE ASSY - ALTERNATE SURFACE CTL RETURN (RESTRICTOR TO 3-WAY VALVE) (AS PER EO 05-5E-6B/13)	371-	1
-29	1V7-8-30	•VALVE ASSY - HYDRAULIC 2-WAY RESTR (NAA) (FOR BREAKDOWN SEE EO 15-718B/4)	101-	1
	AN6290-4	•GASKET -	101-	2
	AN919-6D	•REDUCER -	101-370	2
	AN919-6	•REDUCER - (AS PER EO 05-5E-6B/13)	371-	2
	AN742D15C	•CLAMP -	101-	1
	AN520-10R10	•SCREW -	101-	1
	AN365-1032	•NUT -	101-	1
-30	172-58823-37	•LINE ASSY - ALTERNATE SURFACE CTL RETURN (UNION STA 298 TO RESTRICTOR)	101-210	1
	13A-71814-79	•LINE ASSY - ALTERNATE SURFACE CTL RETURN (UNION STA 298 TO RESTRICTOR)	211-370	1
	13A-71814-1079	•LINE ASSY - ALTERNATE SURFACE CTL RETURN (UNION STA 298 TO RESTRICTOR)	371-	1
-31	AN832-6	•UNION - (AS PER EO 05-5E-6B/13)	A36	1
	AN832-6D	•UNION -	211-370	1
	AN960D916	•WASHER -		1
	AN924-6D	•NUT -		1
-32	13A-71814-35	•LINE ASSY - ALTERNATE SURFACE CTL RETURN (FITTING STA 298 TO TEE STA 294)	001-210	1
	13A-71814-61	•LINE ASSY - ALTERNATE SURFACE CTL RETURN (FITTING STA 298 TO TEE STA 294)	211-370	1
	13A-71814-1061	•LINE ASSY - ALTERNATE SURFACE CTL RETURN (FITTING STA 298 TO TEE STA 294) (AS PER EO 05-5E-6B/13)	371-	1
-33	AN824-6	•TEE - (AS PER EO 05-5E-6B/13)	A36	1
	AN824-6D	•TEE -	211-370	1
-34	13A-71814-31	•LINE ASSY - ALTERNATE SURFACE CTL RETURN (FILTER STA 338 TO TEE STA 296)	001-210	1
	13A-71814-59	•LINE ASSY - ALTERNATE SURFACE CTL RETURN (FILTER STA 338 TO TEE STA 296) (AS PER EO 05-5E-6B/13)	211-370	1
	AN742D8C	•CLAMP -		6
	AN520-10R8	•SCREW -		3
	AN365-1032	•NUT -		3
-35	172-58821-59	•LINE ASSY - EMERGENCY POWER CONTROL RETURN (FILTER TO COMPENSATOR)	001-210	1

FIGURE AND INDEX NUMBER	GROUP HYDRAULIC EQUIPMENT MAJOR ASSEMBLY PORT SIDE STA 298-363 ALTERNATE HYDRAULIC PART NUMBER	1234567 NOMENCLATURE	CODE	UNITS PER ASSY
210 -	13A-71814-63	•LINE ASSY - ALTERNATE SURFACE CTL RETURN (FILTER TO COMPENSATOR)	211-370	1
	13A-71814-1063	•LINE ASSY - ALTERNATE SURFACE CTL RETURN (FILTER TO COMPENSATOR) (AS PER EO 05-5E-6B/13)	371-	1
	AN742D8C	•CLAMP -		1
	AN742D6C	•CLAMP -		1
	AN520-10R8	•SCREW -		1
	AN365-1032	•NUT -		1
-36	325-•625-6•000-S	•CLAMP - T-BOLT STAINLESS STEEL (MPC) (POWER CONTROL COMPENSATOR ATT)	001-300	2
	325-63-600-SH	•CLAMP - T-BOLT STAINLESS STEEL (MPC) (POWER CONTROL COMPENSATOR ATT)	301-	2
-37	172-58822-29	•LINE ASSY - EMERGENCY POWER CONTROL RETURN (COMPENSATOR TO SPEEDBRAKE WEB)	001-210	1
	13A-71814-65	•LINE ASSY - ALTERNATE SURFACE CTL RETURN (COMPENSATOR TO SPEEDBRAKE WEB)	211-370	1
	13A-71814-1065	•LINE ASSY - ALTERNATE SURFACE CTL RETURN (COMPENSATOR TO SPEEDBRAKE WEB)	371-	1
-38	AN833-6	•ELBOW - (AS PER EO 05-5E-6B/13)	A36	1
	AN833-6D	•ELBOW -	211-370	1
	AN960D916	•WASHER -		1
	AN924-6D	•NUT -		1
-39	172-58821-57	•LINE ASSY - EMERGENCY POWER CONTROL RETURN (RESERVOIR TO ELBOW)	001-210	1
	13A-71814-67	•LINE ASSY - ALTERNATE SURFACE CTL RETURN (ELBOW TO RESERVOIR)	211-370	1
	13A-71814-1067	•LINE ASSY - ALTERNATE SURFACE CTL RETURN (ELBOW TO RESERVOIR)	371-	1
-40	325-625-375-S	•CLAMP - T-BOLT STAINLESS STEEL (MPC) (EMY POWER CONTROL RESERVOIR ATT)	001-300	2
	325-63-375-SH	•CLAMP - T-BOLT STAINLESS STEEL (MPC) (EMY POWER CONTROL RESERVOIR ATT)	301-	2
-41	172-58823-19	•LINE ASSY - EMERGENCY SURFACE CONTROL PUMP SUCTION (UNION STA298 TO RESERVOIR)		1
-42	AN832-8	•UNION -		1
	AN960D1216	•WASHER -		1
	AN924-8D	•NUT -		1
-43	172-58822-25	•LINE ASSY - EMERGENCY POWER CONTROL DRAIN (SIGHT GAUGE TO UNION STA 298)	001-210	1
	13A-71814-69	•LINE ASSY - ALTERNATE SURFACE CTL DRAIN (SIGHT GAUGE TO UNION STA 298)	211-	1
	AN742D8C	•CLAMP -		4
	AN520-10R8	•SCREW -		2
	AN365-1032	•NUT -		2
-44	AN832-6	•UNION -		1
	AN832-6D	•UNION -	001-210	1
	AN960D916	•WASHER -	211-	1
	AN924-6D	•NUT -		1
-45	AN824-6	•TEE - (AS PER EO 05-5E-6B/13)	A36	1
	AN824-6D	•TEE -	211-370	1
-46	13A-71814-13	•LINE ASSY - ALTERNATE SURFACE CTL RETURN (TEE STA 296 TO TEE STA 340)	001-210	1
	13A-71814-53	•LINE ASSY - ALTERNATE SURFACE CTL RETURN (TEE STA 296 TO TEE STA 340)	211-370	1
	13A-71814-1053	•LINE ASSY - ALTERNATE SURFACE CTL RETURN (TEE STA 296 TO TEE STA 340) (AS PER EO 05-5E-6B/13)	371-	1
-47	AN783-6	•TEE - (AS PER EO 05-5E-6B/13)	A36	1
	AN783-6D	•TEE -	211-370	1

FIGURE AND INDEX NUMBER	GROUP HYDRAULIC EQUIPMENT MAJOR ASSEMBLY PORT SIDE STA 298-363 ALTERNATE HYDRAULIC PART NUMBER	1234567 NOMENCLATURE	CODE	UNITS PER ASSY
210 -	AN960D916	•WASHER -		1
	AN924-6D	•NUT -		1
	AN6290-6	•GASKET -		3
-48	AN6249-6	•VALVE - 3000-PSI HYDRAULIC CHECK (PORT)		1
-49	NAS424-6	•COUPLING -		1
-50	38390	•FILTER - (PUR) (HYDRAULIC OIL) (PORT SIDE)		1
-51	172-58821-61	•LINE ASSY - EMERGENCY POWER CONTROL RETURN (FILTER & CV TO DISCONNECT STA 335)	001-210	1
	13A-71814-75	•LINE ASSY - ALTERNATE SURFACE CTL RETURN (DISCONNECT STA 335 TO CV & FILTER)	211-370	1
	13A-71814-1075	•LINE ASSY - ALTERNATE SURFACE CTL RETURN (DISCONNECT STA 335 TO CV & FILTER) (AS PER EO 05-5E-6B/13)	371-	1
	AN742D8C	•CLAMP -		1
	AN520-10R8	•SCREW -		1
	AN365-1032	•NUT -		1
	AN815-6	•UNION -		1
	AN6289-6	•NUT -		1
	AN927-6	•ELBOW -		1
	AN6290-6	•GASKET -		2
	AN6291-6	•RING -		1
-52	155-S11-6	•COUPLING HALF - HOSE SELF-SEALING (AQC) (WITH DUST-CAP & CHAIN) (PORT SIDE)		1
	AN3-4A	•BOLT - (COUPLING TO BRACKET ATTACHING)		3
	AN365-1032	•NUT -		3
	AN520-10R8	•SCREW - (CAP CHAIN ATTACHING)		1
	AN365-1032	•NUT -		1
-53	172-58821-39	•LINE ASSY - EMERGENCY POWER CONTROL STAB• RET (TEE STA 339 TO UNION STA 350)	001-210	1
	13A-71814-73	•LINE ASSY - ALTERNATE SURFACE CONTROL STABILIZER RETURN (UNION STA 350 TO TEE STA 339)	211-370	1
	13A-71814-1073	•LINE ASSY - ALTERNATE SURFACE CONTROL STABILIZER RETURN (UNION STA 350 TO TEE STA 339) (AS PER EO 05-5E-6B/13)	371-	1
-54	AN832-6	•UNION - (AS PER EO 05-5E-6B/13)	A36	1
	AN832-6D	•UNION -	211-370	1
	AN960D916	•WASHER -		1
	AN924-6D	•NUT -		1
-55	170-58814-19	•LINE ASSY - EMERGENCY POWER CONTROL RETURN (UNION STA 350 OUTBD TO FLOW RGLR)	001-210	1
	13A-71814-71	•LINE ASSY - ALTERNATE SURFACE CONTROL RETURN (UNION STA 350 OUTBOARD TO UNION STA 360)	211-370	1
	13A-71814-1071	•LINE ASSY - ALTERNATE SURFACE CONTROL RETURN (UNION STA 350 OUTBD TO UNION STA 360) (AS PER EO 05-5E-6B/13)	371-	1
	AN742D8C	•CLAMP -		2
	AN520-10R8	•SCREW -		1
	AN365-1032	•NUT -		1
-56	AN815-6	•UNION -		1
-57	170-58799-67	LINE ASSY - EMERGENCY POWER CONTROL PRESS• (SEE FIG• 212)		REF
-58	170-58799-65	LINE ASSY - EMERGENCY POWER CONTROL RETURN (SEE FIG• 212)		REF
-59	CROSS REFERENCE	LINE ASSY - (SEE FIG• 209)		REF

(CONTINUED SEE FIG• 211)

FIGURE AND INDEX NUMBER	GROUP HYDRAULIC EQUIPMENT MAJOR ASSEMBLY REAR FUSELAGE STARBOARD SIDE ALTERNATE HYDRAULIC PART NUMBER	1234567 NOMENCLATURE	CODE	UNITS PER ASSY
211 -	AN3-17A	•BOLT - (PRESSURE SWITCH ATTACHING)		2
	2L7-2	•LUG - SAFETY (NAA)		1
-13	172-58821-23	•LINE ASSY - EMERGENCY POWER CONTROL PRESS. (FORWARD SW TO REAR SW STBD SIDE)	001-210	1
-14	172-58624-804	•SWITCH ASSY - ALTERNATE SURFACE CONTROL PRESSURE (STARBOARD SIDE)	001-030	1
	172-58624-816	•SWITCH ASSY - ALTERNATE SURFACE CONTROL PRESSURE (STARBOARD SIDE)	031-210	1
	5000-26	••SWITCH - HYDRAULIC PRESSURE (FBK) (AS PER EO 05-5E-6A/87)	001-030	1
	90100-4	••SWITCH - (HRM) (HYDRAULIC PRESSURE)	031-210	1
	50002-3	OR ••SWITCH - (CDP) (PRESSURE)	031-210	
	31100-3	OR ••SWITCH - HYDRAULIC PRESSURE (HDA)	031-210	
	3000-26	OR ••SWITCH ASSY - HYDRAULIC PRESSURE (FBK)	031-210	
	5000-26	OR ••SWITCH - HYDRAULIC PRESSURE (FBK)	031-210	
	AN833-6	••TEE -	001-210	1
	AN6290-6	••GASKET -	001-210	1
	AN6291-6	••RING -	001-210	1
	AN6289-6	••NUT -	001-210	1
	AN3-17A	•BOLT - (PRESSURE SWITCH ATTACHING)	001-210	2
	2L7-2	•LUG - SAFETY (NAA)	001-210	1
-15	172-58643-3	•VALVE ASSY - HYDRAULIC ACCUM AIR (STBD)		1
	161-58117	••FITTING - HYDRAULIC ACCUM AIR VALVE MOUNT		1
	AN6287-1	••VALVE - 3/4 HEXAGON HIGH PRESSURE AIR		1
	AN6290-4	••RING -		1
	AN815-4	••UNION -		1
	AN3-13A	•BOLT - (VALVE TO ANGLE ATTACHING)		2
	AN365-1032	•NUT -		2
-16	172-58823-33	•LINE ASSY - ALTERNATE SURFACE CONTROL ACCUMULATOR AIR-PRESSURE (FILTER TO TEE IN LOWER ACCUMULATOR STBD SIDE)	001-030	1
	13A-71825-7	•LINE ASSY - ALTERNATE SURFACE CONTROL ACCUMULATOR AIR-PRESSURE (FILTER TO TEE ON ACCUMULATOR)	031-	1
-17	172-58823-31	•LINE ASSY - ALTERNATE SURFACE CONTROL PRESSURE ACCUMULATOR AIR (FORWARD GUAGE TO TEE IN LOWER ACCUMULATOR)	031-	1
-18	172-58626-3	•GAUGE ASSY - HYDRAULIC EMERGENCY POWER CONTROL ACCUMULATOR AIR (FORWARD)		1
	AN5771-7A	••GAUGE - SINGLE 1-7/8 DIAL PRESSURE		1
	AN5771T7A	OR ••GUAGE - SINGLE 1-7/8 DIAL PRESSURE		1
	AN833-4	••ELBOW -		1
	AN6290-4	••GASKET -		1
	AN6291-4	••RING -		1
	AN6289-4	••NUT -		1
	AN392-21	•PIN - (GAUGE TO BRACKET ATTACHING)		4
	2W1R16-12-62	•WASHER - PLAIN (NAA)		8
	2WL-13-12-40	•WASHER - PLAIN (NAA)		8
	AN381-2-6	•COTTER-PIN -		4
-19	172-58204	•COVER ASSY - HYDRAULIC EMERGENCY POWER CONTROL ACCUMULATOR GAUGE FORWARD		1
	172-58204-3	••COVER - HYDRAULIC EMERGENCY POWER CONTROL ACCUMULATOR AIR GAUGE		1
	172-58204-5	••RING - HYDRAULIC EMERGENCY POWER CONTROL ACCUMULATOR AIR GAUGE COVER		1

FIGURE AND INDEX NUMBER	GROUP HYDRAULIC EQUIPMENT MAJOR ASSEMBLY REAR FUSELAGE STARBOARD SIDE ALTERNATE HYDRAULIC		CODE	UNITS PER ASSY
	PART NUMBER	1234567 NOMENCLATURE		
211 -	172-58205	••WINDOW - HYDRAULIC AIR GAUGE COVER		1
	165-58159-5	••NAME-PLATE - HYDRAULIC SURFACE CONTROL ACCUMULATOR AIR FITTING		1
	AN515-8R10	••SCREW - (WINDOW & RING TO COVER ATT)		7
	AN960D8L	••WASHER -		7
	AN365-832	••NUT -		7
	AN3-3A	•BOLT - (COVER ATTACHING)		6
-20	13A-71825-3	•LINE ASSY - ALTERNATE SURFACE CTL PRESSURE (TEE ON ACCUMULATOR TO TEE STA 298) (AS PER EO 05-5E-6A/47)		1
-21	13A-71814-11	•LINE ASSY - ALTERNATE SURFACE CTL RETURN (UNION STA 298 STARBOARD SIDE TO TEE STA 295 PORT SIDE)	001-210	1
	13A-71814-51	•LINE ASSY - ALTERNATE SURFACE CTL RETURN (UNION STA 298 STARBOARD SIDE TO TEE STA 295 PORT SIDE)	211-370	1
	13A-71814-1051	•LINE ASSY - ALTERNATE SURFACE CTL RETURN (UNION STA 298 STARBOARD SIDE TO TEE STA 295 PORT SIDE) (AS PER EO 05-5E-6B/13)	371-	1
-22	AN832-6	•UNION - (AS PER EO 05-5E-6B/13)	A36	1
	AN832-6D	•UNION -	211-370	1
	AN960D916	•WASHER -		1
	AN924-6D	•NUT -		1
-23	172-58821-51	•LINE ASSY - EMERGENCY POWER CONTROL RETURN (UNION STA 298 TO TEE STA 321 STBD)	001-210	1
	13A-71825-15	•LINE ASSY - ALTERNATE SURFACE CTL RETURN (TEE STA 381 TO UNION STA 298)	211-370	1
	13A-71825-1015	•LINE ASSY - ALTERNATE SURFACE CTL RETURN (TEE STA 381 TO UNION STA 298) (AS PER EO 05-5E-6B/13)	371-	1
-24	AN824-6	•TEE - (AS PER EO 05-5E-6B/13)	A36	1
	AN824-6D	•TEE -	211-370	1
-25	172-58822-49	•LINE ASSY - EMERGENCY POWER CONTROL RETURN (TEE STA 321 TO RELIEF-VALVE STBD)	001-210	1
	13A-71825-13	•LINE ASSY - ALTERNATE SURFACE CTL RETURN (TEE STA 321 TO RELIEF-VALVE STBD)	211-370	1
	13A-71825-1013	•LINE ASSY - ALTERNATE SURFACE CTL RETURN (TEE STA 321 STARBOARD SIDE TO RV) (AS PER EO 05-5E-6B/13)	371-	1
-26	172-58821-49	•LINE ASSY - EMERGENCY POWER CONTROL RETURN (RELIEF-VALVE TO LOWER ACCUMULATOR)	001-210	1
	13A-71825-11	•LINE ASSY - ALTERNATE SURFACE CTL RETURN (TEE STA 321 TO ACCUMULATOR ELBOW STARBOARD SIDE)	211-370	1
	13A-71825-1011	•LINE ASSY - ALTERNATE SURFACE CTL RETURN (ACCUMULATOR ELBOW TO TEE STA 321 STARBOARD SIDE) (AS PER EO 05-5E-6B/13)	371-	1
-27	AN742D6C	•CLAMP - (AS PER EO 05-5E-6A/47)		1
	AN742D8C	•CLAMP -		1
	AN520-10R10	•SCREW -		1
	AN365-1032	•NUT -		1
-28	13A-71825-5	•LINE ASSY - ALTERNATE SURFACE CTL RETURN (ELBOW ON ACCUM TO ELBOW STA 298) (AS PER EO 05-5E-6A/47)	001-210	1
	13A-71825-9	•LINE ASSY - ALTERNATE SURFACE CTL RETURN (ELBOW ON ACCUM TO ELBOW STA 298)	211-370	1
	13A-71825-1009	•LINE ASSY - ALTERNATE SURFACE CTL RETURN (ELBOW ON ACCUM TO ELBOW STA 298) (AS PER EO 05-5E-6B/13)	371-	1

FIGURE AND INDEX NUMBER	GROUP HYDRAULIC EQUIPMENT MAJOR ASSEMBLY REAR FUSELAGE STARBOARD SIDE ALTERNATE HYDRAULIC PART NUMBER	1234567 NOMENCLATURE	CODE	UNITS PER ASSY
211 -	AN742D8C	•CLAMP - (AS PER EO 05-5E-6A/47)		2
	AN520-10R10	•SCREW -		1
	AN365-1032	•NUT -		1
-29	AN833-6	•ELBOW - (AS PER EO 05-5E-6B/13)	A36	1
	AN833-6D	•ELBOW -	211-370	1
	AN960D916	•WASHER -		2
	AN924-6D	•NUT -		1
-30	13A-71814-9	•LINE ASSY - ALTERNATE SURFACE CTL RETURN (TEE STA 296 PORT SIDE TO ELBOW STA 298 STBD SIDE)	001-210	1
	13A-71814-49	•LINE ASSY - ALTERNATE SURFACE CTL RETURN (TEE STA 296 TO ELBOW STA 298 STBD)	211-370	1
	13A-71814-1049	•LINE ASSY - ALTERNATE SURFACE CTL RETURN (TEE STA 296 TO ELBOW STA 298 STBD) (AS PER EO 05-5E-6B/13)	371-	1
-31	13A-71122	•CLAMP ASSY - HYDRAULIC LINE BOTTOM FRAME STA 298		2
	AN3-12A	•BOLT - (CLAMP ASSEMBLING)		4
	AN960D10L	•WASHER -		4
	AN365-1032	•NUT -		4
-32	13A-71814-29	LINE ASSY - ALTERNATE SURFACE CTL PRESSURE (SEE FIG. 209)		REF
-33	13A-71814-35	LINE ASSY - ALTERNATE SURFACE CTL RETURN (SEE FIG. 210)		REF
-34	13A-71814-7	LINE ASSY - ALTERNATE SURFACE CTL RETURN (SEE FIG. 209)		REF

-000-

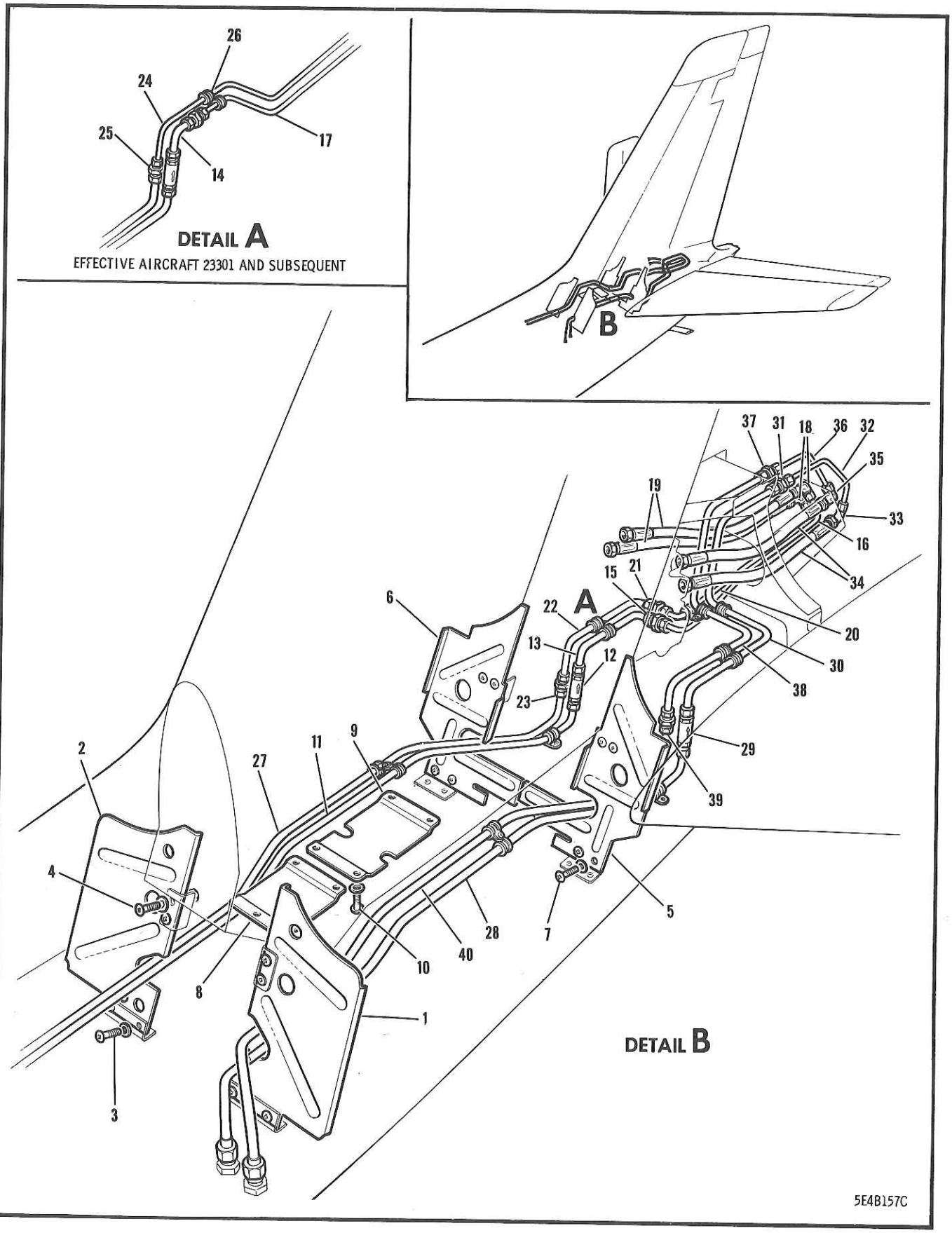

FIGURE 212 EMPENNAGE HYDRAULIC EQUIPMENT

FIGURE AND INDEX NUMBER	GROUP HYDRAULIC EQUIPMENT MAJOR ASSEMBLY EMPENNAGE HYDRAULIC EQUIPMENT PART NUMBER	1234567 NOMENCLATURE	CODE	UNITS PER ASSY
212 -	176-52032	SURFACE CONTROLS INSTL - REAR FUSELAGE (SEE SECTION 7)		REF
- 1	170-52294-1	•SHIELD ASSY - HORIZONTAL STAB• CONTROL FORWARD VERTICAL BEAM PORT SIDE		1
- 2	170-52294-2	•SHIELD ASSY - HORIZONTAL STAB• CONTROL FORWARD VERTICAL BEAM STARBOARD SIDE		1
- 3	AN515-8R8	•SCREW - (SHIELD LOWER ATTACHING)		4
- 4	AN515-8R7	•SCREW - (SHIELD UPPER ATTACHING)		4
	AN960D8	•WASHER -		4
	AN364-832	•NUT -		4
- 5	170-52297-1	•SHIELD - HORIZONTAL STABILIZER CONTROL REAR VERTICAL BEAM PORT SIDE		1
- 6	170-52297-2	•SHIELD - HORIZONTAL STABILIZER CONTROL REAR VERTICAL BEAM STARBOARD SIDE		1
- 7	AN515-8R8	•SCREW -		8
- 8	170-52295	•SHIELD - HORIZONTAL STABILIZER CONTROL AT VERTICAL STABILIZER RIB FORWARD		1
- 9	170-52296	•SHIELD - HORIZONTAL STABILIZER CONTROL AT VERTICAL STABILIZER RIB REAR		1
-10	AN515-8R8	•SCREW - (SHIELD ATTACHING)		7
	AN960D8	•WASHER -		7
-11	170-58799-63	•LINE ASSY - POWER CONTROL PRESSURE CV STA 389 TO UNION STA 362		1
-12	AN6249-6	•VALVE - 3000-PSI HYDRAULIC CHECK (STA 388)		1
-13	13A-71824-13	•LINE ASSY - NORMAL SURFACE CONTROL PRESS• CV STA 388 TO REDUCER STA 404 (AS PER EO 05-5E-6A/11)	001-300	1
-14	13A-71824-21	•LINE ASSY - NORMAL SUR CTL PRESSURE CV STA 388 TO REDUCER STA 404	301-	1
	AN742D6C	•CLAMP -	001-300	2
	AN742D4C	•CLAMP -	301-	2
	AN520-10R8	•SCREW -		1
	AN365-1032	•NUT -		1
-15	AN919-6	•REDUCER - (AS PER EO 05-5E-6A/11)	001-300	1
-16	13A-71824-15	•LINE ASSY - NORMAL SUR CONTROL PRESSURE REDUCER STA 404 TO ELBOW STA 408 (AS PER EO 05-5E-6A/11)	001-300	1
-17	13A-71824-23	•LINE ASSY - NORMAL SUR CONTROL PRESSURE REDUCER STA 404 TO ELBOW STA 408	301-	1
-18	AN833-4	•ELBOW - (AS PER EO 05-5E-6A/11)		2
	AN960D716	•WASHER - (AS PER EO 05-5E-6A/11)		2
	AN924-4	•NUT - (AS PER EO 05-5E-6A/11)		2
-19	3H3-4-0124	•HOSE ASSY - PLASTIC COVERED (NAA) (AS PER EO 05-5E-6A/51)	101-	2
-20	13A-71824-19	•LINE ASSY - NORMAL SURFACE CONTROL RETURN ELBOW STA 408 TO REDUCER STA 396 (AS PER EO 05-5E-6A/11)	001-300	1
-21	AN919-6	•REDUCER - (STA 396)(AS PER EO 05-5E-6A/11)	001-300	1
-22	13A-71824-17	•LINE ASSY - NORMAL CONTROL SURFACE RETURN REDUCER STA 396 TO UNION STA 388 (AS PER EO 05-5E-6A/11)	001-300	1
-23	AN815-6	•UNION - (STA 388) (AS PER EO 05-5E-6A/11)	001-300	1
-24	13A-71824-25	•LINE ASSY - NORMAL CONTROL SURFACE RETURN ELBOW STA 408 TO REDUCER STA 388	301-	1
-25	AN919-6D	•REDUCER - (STA 388)	301-	1
-26	AN742D4C	•CLAMP -	301-	4

FIGURE AND INDEX NUMBER	GROUP HYDRAULIC EQUIPMENT MAJOR ASSEMBLY EMPENNAGE HYDRAULIC EQUIPMENT PART NUMBER	1234567 NOMENCLATURE	CODE	UNITS PER ASSY
212 -27	170-58799-61	•LINE ASSY - POWER CONTROL RETURN UNION TO UNION STA 355-388		1
-28	170-58799-67	•LINE ASSY - EMERGENCY POWER CTL PRESSURE FROM CV STA 388 TO UNION STA 354		1
-29	AN6249-6	•VALVE - 3000-PSI HYDRAULIC CHECK		1
-30	13A-71814-39	•LINE ASSY - ALTERNATE SURFACE CTL PRESSURE FROM REDUCER STA 404 TO CHECK VALVE STA 388 (AS PER EO 05-5E-6A/11)		1
-31	AN919-6	•REDUCER - (STA 404)(AS PER EO 05-5E-6A/11)		1
-32	13A-71814-41	•LINE ASSY - ALTERNATE SURFACE CONTROL PRESSURE REDUCER STA 404 TO ELBOW STA 408 (AS PER EO 05-5E-6A/11)		1
-33	AN837-4	•ELBOW - (PRESSURE) (AS PER EO 05-5E-6A/11)		1
-34	3H3-4-0130	•HOSE ASSY - PLASTIC COVERED (NAA) (AS PER EO 05-5E-6A/11)	001-100	2
	MS28741-4-0130	OR •HOSE ASSY - DETACHABLE END FITTING M/P		
	3H3-4-0124	•HOSE ASSY - PLASTIC COVERED (NAA)	101-	2
-35	AN833-4	•ELBOW - (RETURN) (AS PER EO 05-5E-6A/11)		1
	AN960D716	•WASHER - (AS PER EO 05-5E-6A/11)		2
	AN924-4	•NUT - (AS PER EO 05-5E-6A/11)		2
-36	13A-71814-45	•LINE ASSY - ALTERNATE SURFACE CONTROL RETURN REDUCER STA 404 TO ELBOW STA 408 (AS PER EO 05-5E-6A/11)		1
-37	AN919-6	•REDUCER - (STA 404)(AS PER EO 05-5E-6A/11)		1
-38	13A-71814-43	•LINE ASSY - ALTERNATE SURFACE CONTROL RET UNION STA 387 TO REDUCER STA 404 (AS PER EO 05-5E-6A/11)		1
-39	AN815-6	•UNION -		1
-40	170-58799-65	•LINE ASSY - EMERGENCY POWER CONTROL RETURN FROM UNION STA 387 TO UNION STA 360		1
	AN742D8C	•CLAMP -	001-300	30
	AN742D8C	•CLAMP -	301-	26
	AN520-10R8	•SCREW -		20
	AN365-1032	•NUT -		20

-000-

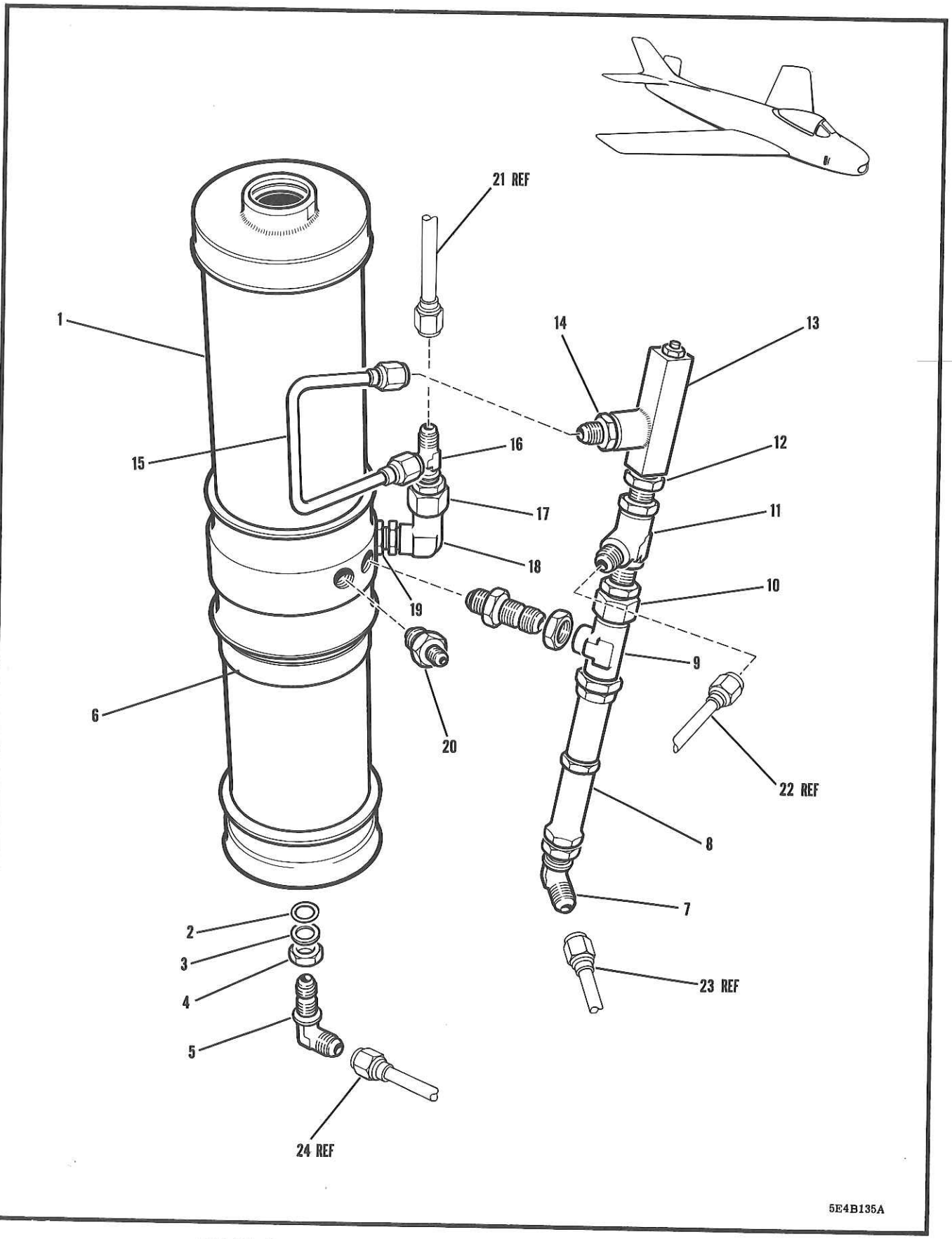

FIGURE 213 NOSE GEAR ALTERNATE EXTENSION ACCUMULATOR

FIGURE AND INDEX NUMBER	GROUP HYDRAULIC EQUIPMENT MAJOR ASSEMBLY NOSE GEAR ALTERNATE EXTENSION ACCUMULATOR PART NUMBER	1234567 NOMENCLATURE	CODE	UNITS PER ASSY
213 -	172-58640-5	ACCUMULATOR ASSY - HYDRAULIC EMY NOSE GEAR EXTENSION (SEE FIG. 191)		1
- 1	177-58047-800	•ACCUMULATOR ASSY - HYDRAULIC 60-CU/IN SELF-DISPLACING (SEE FIG. 225)		REF
- 2	AN6290-4	•GASKET -		1
- 3	AN6291-4	•RING -		1
- 4	AN6289-4	•NUT -		1
- 5	AN833-4D	•ELBOW -		1
- 6	170-58259-7	•NAME-PLATE - HYDRAULIC ACCUMULATOR		1
	AN520-10R10	•SCREW -		1
	AN960D10	•WASHER -		1
	AN365-1032	•NUT -		1
- 7	AN833-4D	•ELBOW -		1
	AN6289-4	•NUT -		1
	AN6291-4	•RING -		1
	AN6290-4	•GASKET -		1
- 8	1V7-20-30	•VALVE ASSY - HYD 2-WAY RESTRICTOR (NAA) (FOR BREAKDOWN SEE EO 15-71BB-4)		1
	AN6290-4	•GASKET -		1
	AN919-6D	•REDUCER -		1
	AN6290-6	•GASKET -		1
	AN6289-6	•NUT -		1
- 9	AN926-6D	•TEE -		1
	AN6290-6	•GASKET -		1
	AN6291-6	•RING -		1
	AN832-6D	•UNION -		1
	AN6290-6	•GASKET -		2
	AN6289-6	•NUT -		1
-10	AN893-2	•BUSHING -		1
	AN6290-4	•GASKET -		1
	AN6291-4	•RING -		1
	AN6289-4	•NUT -		1
-11	AN784D4	•TEE -		1
	AN6290-4	•GASKET -		1
	AN6291-4	•RING -		1
	AN6289-4	•NUT -		1
-12	AN832-4D	•UNION -		1
	AN6290-4	•GASKET -		1
-13	AN6245B4	•RELIEF-VALVE - HYDRAULIC THERMAL EXPANSION		1
	AN6290-4	•GASKET -		1
-14	AN815-4D	•UNION -		1
-15	172-58807-65	•LINE ASSY - UTILITY SYSTEM RETURN (RV TO EMERGENCY NOSE GEAR ACCUMULATOR TEE)		1
-16	AN804D4	•TEE -		1
	AN6290-4	•GASKET -		1
	AN6291-4	•RING -		1
	AN6289-4	•NUT -		1
-17	AN893-2D	•BUSHING -		1
-18	AN927-6D	•ELBOW -		1
	AN6289-6	•NUT -		1
	AN6290-6	•GASKET -		1
	AN6291-6	•RING -		1
-19	AN832-6D	•UNION -		1
	AN6290-6	•GASKET -		2
-20	AN919-6D	•REDUCER -		1
-21	172-58807-21	LINE ASSY - UTILITY SYSTEM RETURN (SEE FIG. 191)		REF
-22	191-58803-15	LINE ASSY - UTILITY SYSTEM PRESSURE (SEE FIG. 191)		REF
-23	191-58803-17	LINE ASSY - UTILITY SYS PRESSURE (SEE FIG. 191)		REF

FIGURE AND INDEX NUMBER	GROUP HYDRAULIC EQUIPMENT MAJOR ASSEMBLY NOSE GEAR ALTERNATE EXTENSION ACCUMULATOR		CODE	UNITS PER ASSY
	PART NUMBER	1234567 NOMENCLATURE		
213 -24	191-58803-19	LINE ASSY - EMERGENCY NOSE GEAR ACCUMULATOR AIR-PRESSURE (SEE FIG. 191)		REF
		-000-		

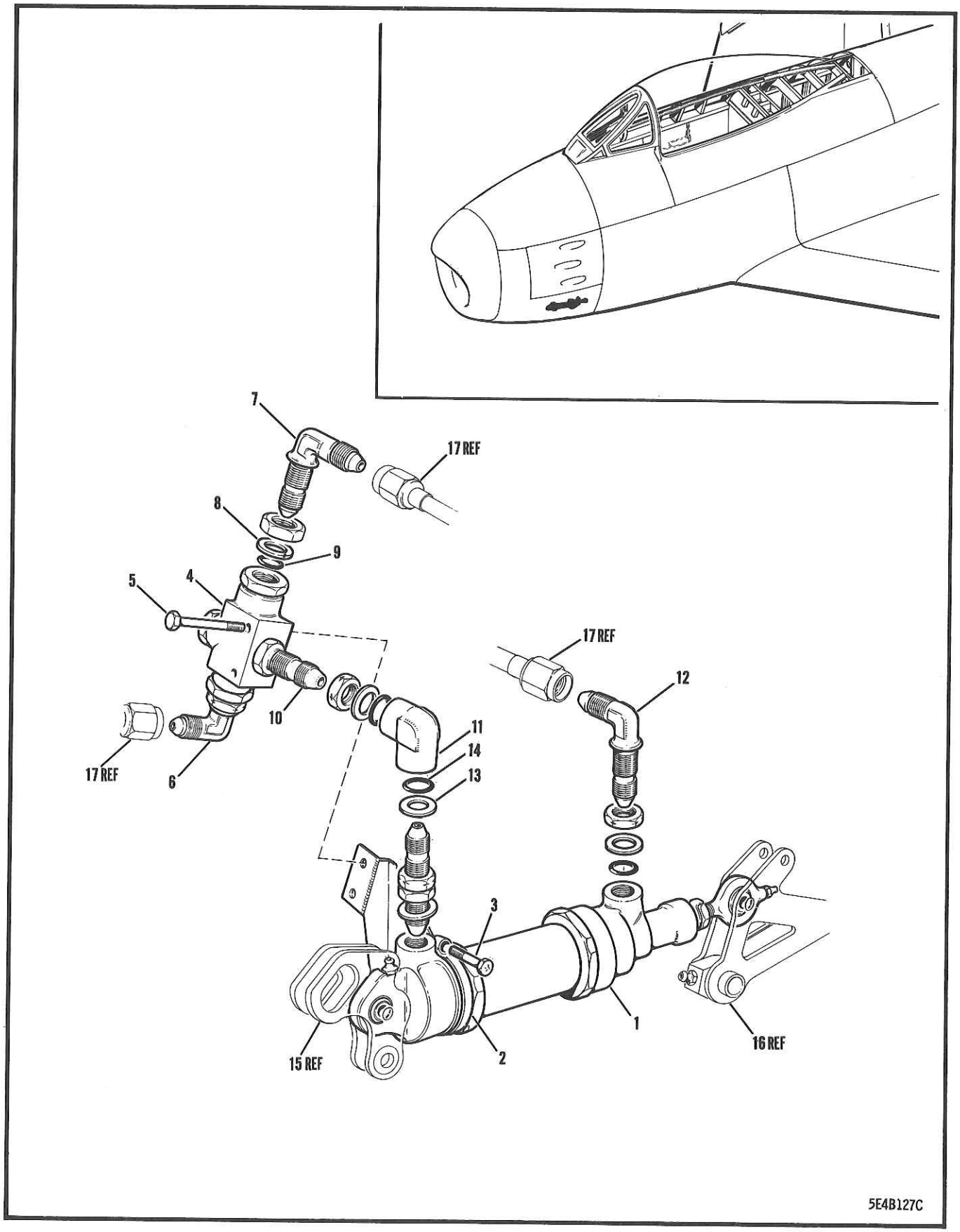

FIGURE 214 NOSE GEAR ACTUATING CYLINDER

FIGURE AND INDEX NUMBER	GROUP HYDRAULIC EQUIPMENT MAJOR ASSEMBLY NOSE GEAR ACTUATING CYLINDER PART NUMBER	1234567 NOMENCLATURE	CODE	UNITS PER ASSY
214 -	151-58630-10	CYLINDER ASSY - HYDRAULIC NOSE GEAR OPR (SEE FIG. 188)		1
- 1	151-58030	•CYLINDER ASSY - HYDRAULIC NOSE GEAR ACTE (FOR BREAKDOWN SEE EO 15-71BD-2)		1
- 2	151-58409	•BRACKET ASSY - HYD NOSE GEAR SHUTTLE VALVE		1
- 3	AN3-10A AN364-1032	•BOLT - (BRACKET TO CYLINDER RETAINING) •NUT -		1 1
- 4	140-58016-3	•VALVE ASSY - HYDRAULIC SHUTTLE (FOR BREAKDOWN SEE EO 15-71BB-4)		2
- 5	AN3-13A AN364-1032	•BOLT - (VALVE TO BRACKET ATTACHING) •NUT -		2 1 1
- 6	AN837-4	•ELBOW -		2
- 7	AN833-4D AN6289D4	•ELBOW - •NUT -		2 4
- 8	AN6291-4	•RING -		2
- 9	AN6290-4	•GASKET -		1
-10	AN832-4D	•UNION -		1
-11	AN927-4D	•ELBOW -		3
-12	AN833-4D AN6289D4	•ELBOW - •NUT -		3 4
-13	AN6291-4	•RING -		REF
-14	AN6290-4	•GASKET -		REF
-15	151-34506	BELL-CRANK ASSY - NOSE LDG/GR RETRACT CYL ACTE (SEE SECTION 4)		REF
-16	151-34145	BELL-CRANK ASSY - NOSE LDG/GR DRAG BRACE RETR (SEE SECTION 4)		REF
-17	CROSS REFERENCE	HOSE ASSY - (SEE FIG. 188)		
		-000-		

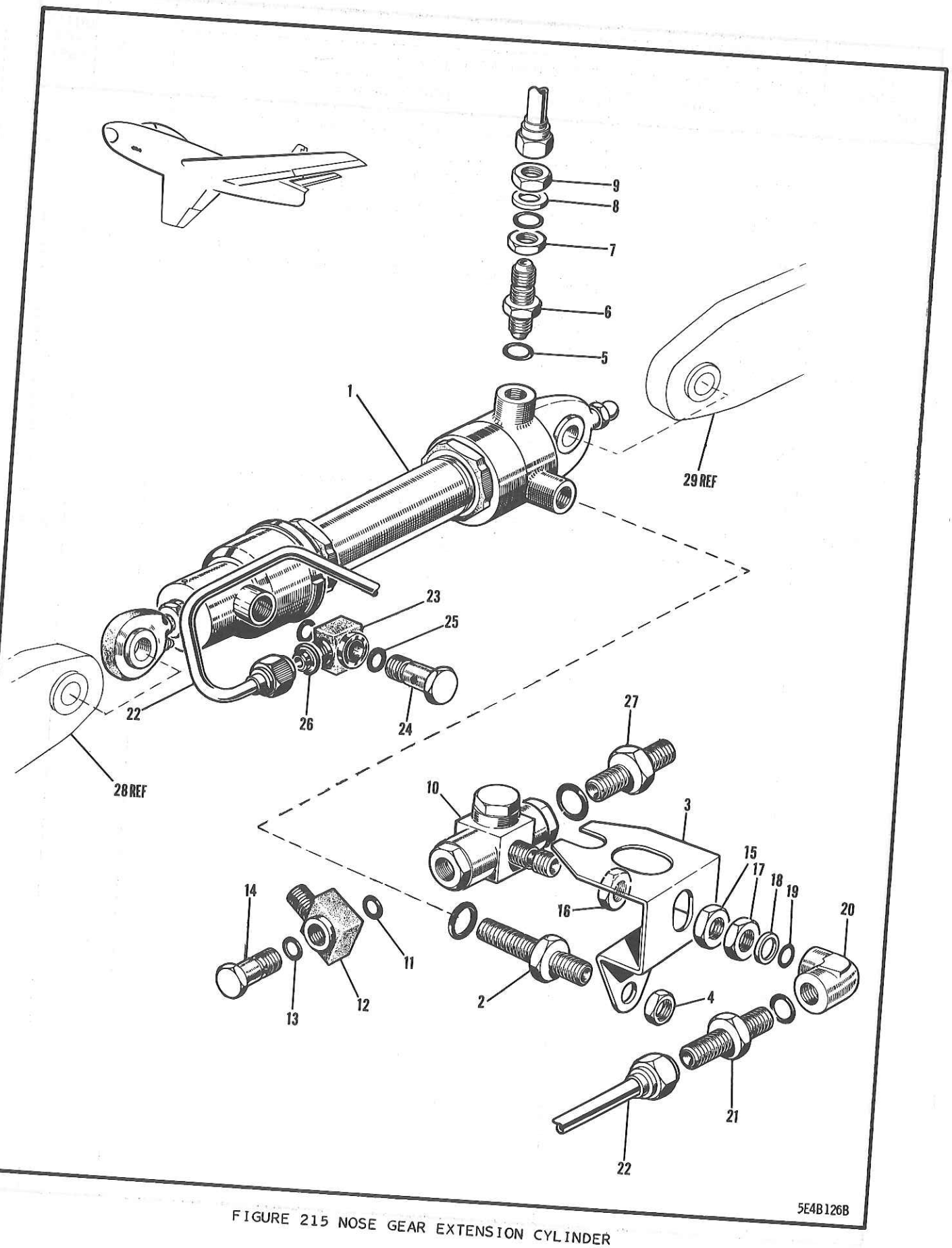

FIGURE 215 NOSE GEAR EXTENSION CYLINDER

GROUP HYDRAULIC EQUIPMENT

MAJOR ASSEMBLY NOSE GEAR EXTENSION CYLINDER

FIGURE AND INDEX NUMBER	PART NUMBER	1234567 NOMENCLATURE	CODE	UNITS PER ASSY
215 -	151-58633-9	CYLINDER ASSY - HYDRAULIC NOSE GEAR EXTN (SEE FIG. 188)		1
- 1	151-58033-5	•CYLINDER ASSY - HYDRAULIC NOSE GEAR EXTN (FOR BREAKDOWN SEE EO 15-71BD-2)		1
- 2	151-58539	•PLUG - HYDRAULIC LDG/GR EXTENSION CYLINDER		1
	AN6227B6	•PACKING -		1
- 3	151-58520	•BRACKET ASSY - HYDRAULIC NOSE GEAR EXTN CYLINDER SHUTTLE VALVE SUPPORT		1
- 4	AN364-624	•NUT -		1
- 5	AN6290-4	•GASKET -		1
- 6	AN832-4	•UNION -		1
- 7	140-58560	•JAM-NUT - HYDRAULIC SPECIAL THIN BULKHEAD		1
- 8	AN960D716	•WASHER -		1
- 9	AN924-4D	•NUT -		1
-10	151-58017-3	•VALVE ASSY - HYDRAULIC SHUTTLE (FOR BREAKDOWN SEE EO 15-71BB-4)		1
-11	AN6290-4	•GASKET -		1
-12	151-58524	•ELBOW - HYDRAULIC UNIVERSAL 90-DEG		1
-13	AN6227B6	•PACKING -		1
-14	151-58525	•BOLT - HYDRAULIC UNIVERSAL FITTING		1
-15	1N5-4D	•NUT - BULKHEAD FITTING (NAA)		1
-16	140-58560	•JAM-NUT - HYDRAULIC SPECIAL THIN BULKHEAD		1
-17	AN6289-4	•NUT -		1
-18	AN6291-4	•RING -		2
-19	AN6290-4	•GASKET -		1
-20	AN927-4D	•ELBOW -		1
-21	AN815-4D	•UNION -		1
	AN6290-4	•GASKET -		1
-22	191-58801-7	•LINE ASSY - LANDING GR DOWN (SHUTTLE VALVE ON CYLINDER TO BANJO FTG ON CYL END)		1
-23	151-58524	•ELBOW - HYDRAULIC UNIVERSAL 90-DEG		1
-24	151-58525	•BOLT - HYDRAULIC UNIVERSAL FITTING		1
-25	AN6227B6	•PACKING -		1
-26	AN6290-4	•GASKET -		1
-27	AN815-4	•UNION -		REF
-28	165-34510	ARM - NOSE GEAR EXTN CYL TRUNNION ACTUATOR (SEE SECTION 4)		REF
-29	140-34522	FITTING ASSY - NOSE GEAR EXTN CYL ATTACHING (SEE SECTION 4)		

-000-

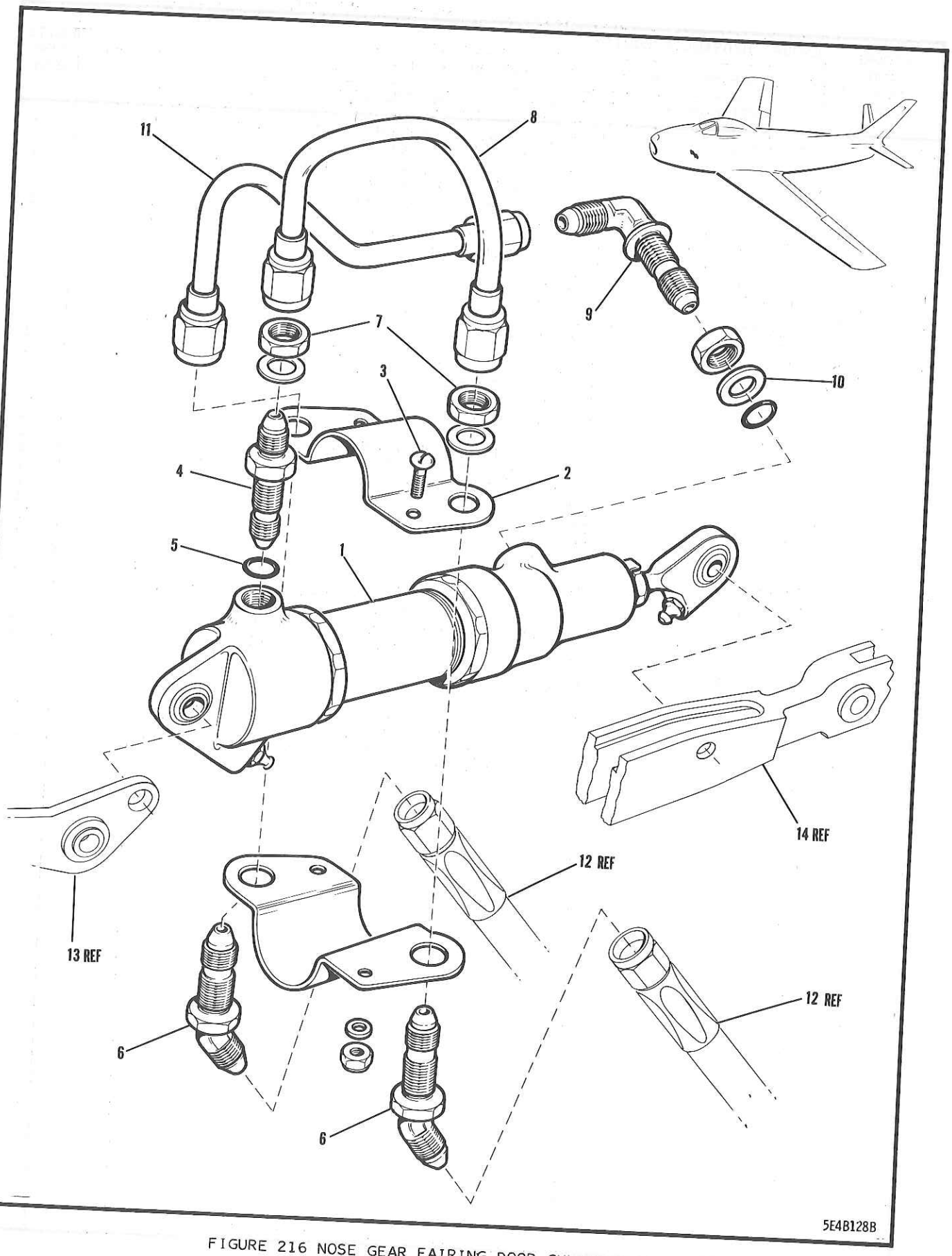

FIGURE 216 NOSE GEAR FAIRING DOOR CYLINDER

FIGURE AND INDEX NUMBER	GROUP HYDRAULIC EQUIPMENT MAJOR ASSEMBLY NOSE GEAR FAIRING DOOR CYLINDER PART NUMBER	1234567 NOMENCLATURE	CODE	UNITS PER ASSY
216 -	151-58645-3	CYLINDER ASSY - HYDRAULIC NOSE WHEEL FAIR. DOOR OPERATING (SEE FIG. 188)		1
- 1	140-58045	•CYLINDER ASSY - HYDRAULIC NOSE WHEEL FAIRING DOOR OPERATING (FOR BREAKDOWN SEE EO 15-71BD-2)		1
- 2	140-58460	•CLAMP ASSY - HYD NOSE GEAR DOOR CYL HOSE		1
	140-58460-3	••CLAMP - HYDRAULIC NOSE GEAR DOOR CYL HOSE		1
	140-58460-4	••CLAMP - HYDRAULIC NOSE GEAR DOOR CYL HOSE		2
- 3	AN520-10R8	•SCREW - (CLAMP TO CYLINDER RETAINING)		2
	AN960-10	•WASHER -		2
	AN365-1032	•NUT -		1
- 4	AN815-4D	•UNION -		1
- 5	AN6290-4	•GASKET -		2
- 6	AN837-4D	•ELBOW -		2
	AN960-716C	•WASHER -		2
- 7	AN924-4D	•NUT -		1
- 8	191-58801-3	•LINE ASSY - FAIRING DOOR OPEN (UNION FAIRING DOOR CYLINDER TO ELBOW)		1
- 9	AN837-4D	•ELBOW -		1
	AN6290-4	•GASKET -		1
-10	AN6291-4	•RING -		1
	AN6289D4	•NUT -		1
-11	191-58801-5	•LINE ASSY - FAIRING DOOR CLOSE (ELBOW FAIRING DOOR CYLINDER TO ELBOW)		REF
-12	MS28741-4-0120	HOSE ASSY - MEDIUM PRESS. DTCH END FITTING (SEE FIG. 188)		REF
-13	140-34545	BELL-CRANK ASSY - NOSE WHEEL DOOR HYDRAULIC CYLINDER ATTACHING (SEE SECTION 4)		REF
-14	140-34302-13	HINGE ASSY - NOSE GEAR WHEEL DOOR FORWARD (SEE SECTION 4)		

-000-

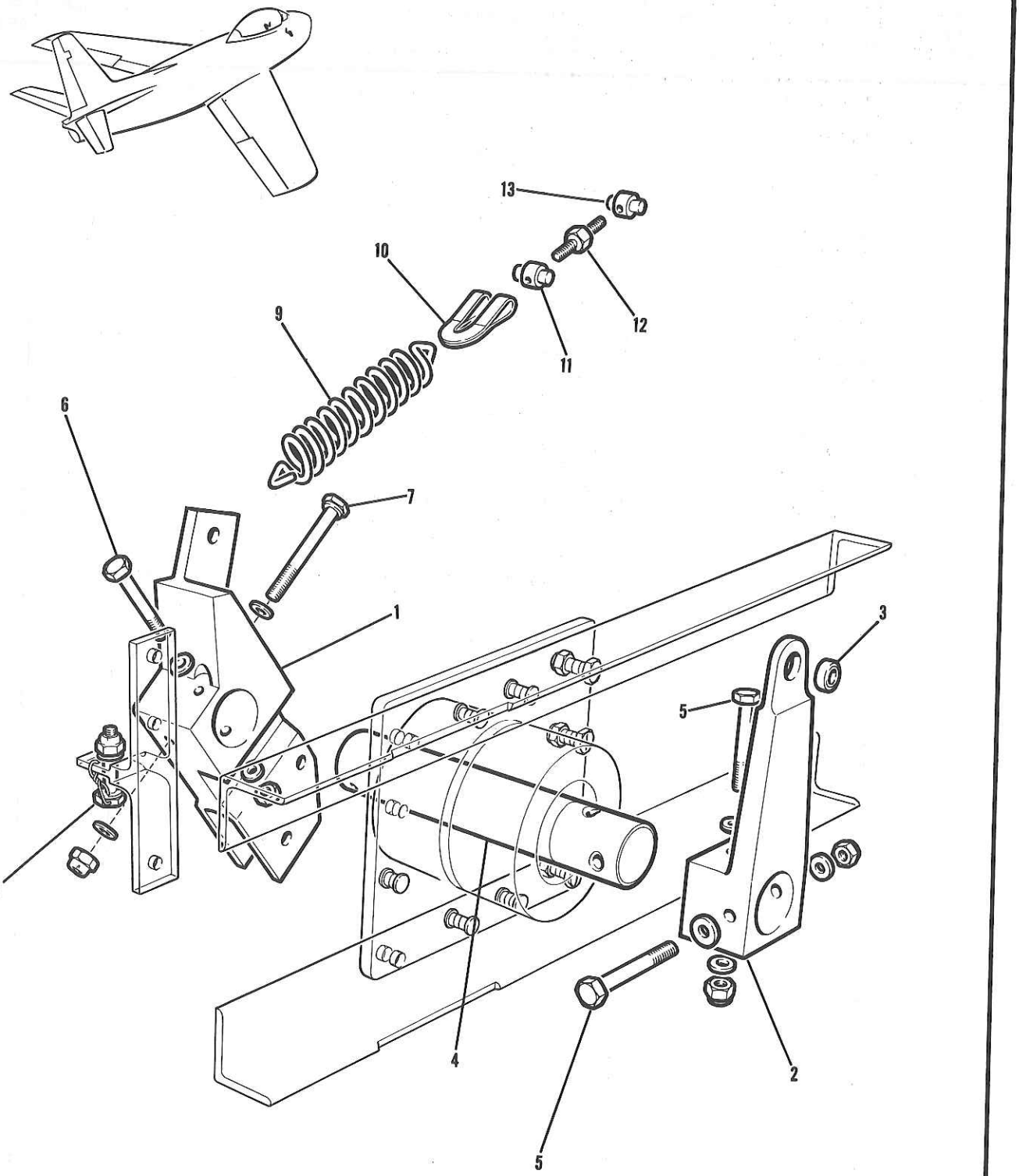

FIGURE 217 MASTER BRAKE CYLINDER BELL-CRANK

FIGURE AND INDEX NUMBER	GROUP HYDRAULIC EQUIPMENT MAJOR ASSEMBLY MASTER BRAKE CYLINDER BELL-CRANK PART NUMBER	1234567 NOMENCLATURE	CODE	UNITS PER ASSY
217 -	172-58059	HYDRAULIC EQUIP. INSTL - FUS STA 53 TO 135 (SEE FIG. 190)		REF
	161-58174-3	.BELL-CRANK ASSY - HYDRAULIC MASTER BRAKE CYLINDER (PORT)		1
	161-58174-4	.BELL-CRANK ASSY - HYDRAULIC MASTER BRAKE CYLINDER (STARBOARD)		1
- 1	161-58116-3	..BELL-CRANK - HYDRAULIC MASTER BRAKE CYL OUTBOARD (PORT)		1
	161-58116-4	..BELL-CRANK - HYDRAULIC MASTER BRAKE CYL OUTBOARD (STARBOARD)		1
	151-58318	..BELL-CRANK ASSY - HYDRAULIC MASTER BRAKE CYLINDER INBOARD		1
- 2	151-58318-3	...BELL-CRANK - HYDRAULIC MASTER BRAKE CYLINDER INBOARD		1
- 3	151-58346-3	...BUSHING - HYDRAULIC 3/16 BOLT PRESSED-IN		1
- 4	151-58319	..SHAFT - HYDRAULIC MASTER BRAKE TORQUE		1
- 5	AN174-12A	..BOLT -		2
- 6	AN174-14A	..BOLT -		1
- 7	AN174-17A	..BOLT -		1
	AN960-416	..WASHER -		6
	AN364-428	..NUT -		4
- 8	5B2-12DH	.BOLT - ADJUSTMENT (NAA)		2
	AN6227B12	.PACKING -		1
	AN364-428	.NUT -		2
- 9	161-58121	.SPRING - HYDRAULIC MASTER BRAKE CYL RETURN		2
-10	161-58122	.CLIP - HYDRAULIC BRAKE SPRING ADJUSTING		2
-11	NAS25-3KL	.TRUNNION -		2
-12	NAS27-3-18	.TURNBUCKLE -		2
-13	NAS25-3KR	.TRUNNION -		2
		(CONTINUED SEE FIG. 218)		

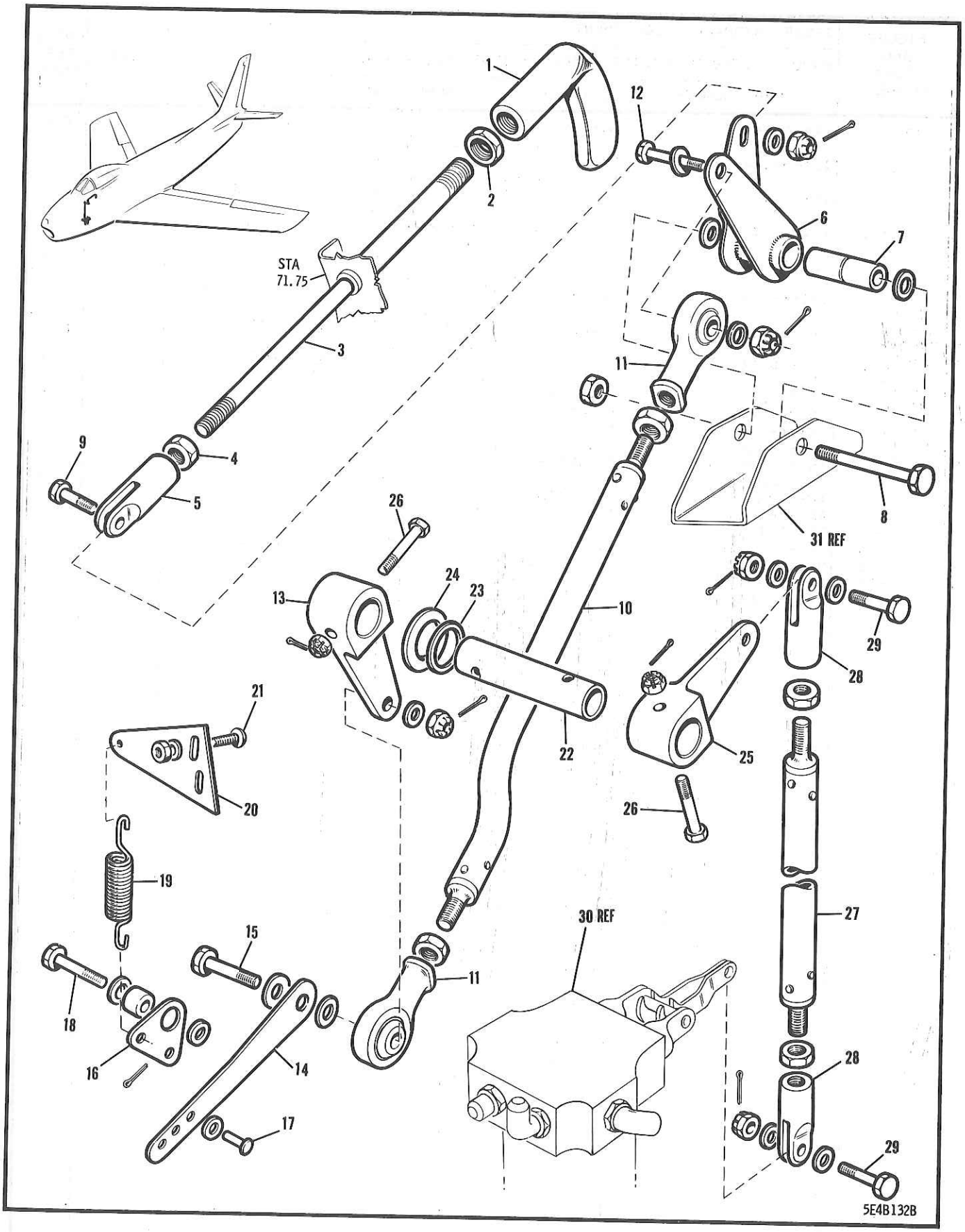

FIGURE 218 PARKING BRAKE VALVE CONTROL

FIGURE AND INDEX NUMBER	GROUP HYDRAULIC EQUIPMENT MAJOR ASSEMBLY PARKING BRAKE VALVE CONTROL PART NUMBER	1234567 NOMENCLATURE	CODE	UNITS PER ASSY
218 -	172-58059	HYDRAULIC EQUIP. INSTL - FUS STA 53 TO 135 (SEE FIG. 190)		REF
- 1	151-58270	.HANDLE - HYDRAULIC PARKING BRAKE CONTROL		1
- 2	AN341-516	.NUT -		1
- 3	151-58240	.ROD - HYDRAULIC PARKING BRAKE CONTROL UP.		1
- 4	AN341-416	.NUT -		1
- 5	151-58238	.CLEVIS - HYDRAULIC PARKING BRAKE CONTROL		1
- 6	151-58241	.BELL-CRANK ASSY - HYD PARKING BRAKE CTL		1
- 7	NAS74-3-015	.BUSHING -		1
- 8	AN3-13A	.BOLT -		1
	AN960-10L	.WASHER -		2
	AN365-1032	.NUT -		1
- 9	AN3-6	.BOLT -		1
	AN960-10L	.WASHER -		2
	AN310-3	.NUT -		1
	AN380-2-2	.PIN -		1
	151-58236	.ROD ASSY - HYD PARKING BRAKE CONTROL INBD		1
-10	151-58235	..ROD - HYDRAULIC PARKING BRAKE CONTROL LWR		1
-11	1R8P8-428	..ROD-END - THREADED (NAA)		2
	F34-14	..ROD-END - UNIBAL SPHERICAL BEARING (HEC)		2
	AN316-4R	..NUT -		2
-12	AN3-10A	.BOLT -		1
	AN960D10	.WASHER -		2
	NAS43DD-3-10	.SPACER -		1
	AN365-1032	.NUT -		1
-13	151-58230	.BELL-CRANK - HYD PARKING BRAKE VALVE INBD		1
-14	151-58501	.LINK - HYDRAULIC PARKING BRAKE RETURN		1
-15	AN3-11	.BOLT -		1
	AN960D10	.WASHER -		2
	AN310-3	.NUT -		1
	AN380-2-2	.PIN -		1
-16	151-58500	.BELL-CRANK - HYDRAULIC PARKING BRAKE RETURN SPRING		1
-17	AN392-9	.PIN -		1
	AN960D4	.WASHER -		1
	AN380-2-2	.PIN -		1
-18	5B17-7A	.BOLT - CORROSION-RESISTANT (10-32) (NAA) (AS PER EO 05-5E-6A/79)		2
	AN960D10	.WASHER -		1
	NAS43DD3-22	.SPACER - (AS PER EO 05-5E-6A/79)		1
	NAS43DD5-16	.SPACER - (AS PER EO 05-5E-6A/79)		1
-19	151-58499-950	.SPRING - HYDRAULIC PARKING BRAKE RETURN		1
-20	151-58497	.BRACKET - HYDRAULIC PARKING BRAKE RET SPG		1
-21	AN520-10R8	.SCREW -	001-100	2
	AN515-6R7	.SCREW -	101-	2
	AN960D10	.WASHER -	001-100	4
	2W18-6	.WASHER - PLAIN (NAA)	101-	4
	AN365-1032	.NUT -	001-100	2
	AN365-632	.NUT -	101-	2
-22	151-58231	.TUBE - HYD PARKING BRAKE VALVE OPR TORQUE		1
-23	AN6227B10	.PACKING -		1
-24	2W1B32-28-32	.WASHER - PLAIN (NAA)		1
-25	151-58229	.BELL-CRANK - HYD PARKING BRAKE VALVE OUTBD		1
-26	5B17-C6	.BOLT - CORROSION RESISTANT (10-32) (NAA)		2
	AN310-3	.NUT -		2
	AN380-2-2	.PIN -		2
	151-58242	.ROD ASSY - HYDRAULIC PARKING BRAKE VALVE OUTBOARD CONTROL		1
-27	151-58242-3	..ROD - HYD PARKING BRAKE VALVE OUTBD CTL		1
-28	151-58238	..CLEVIS - HYDRAULIC PARKING BRAKE CONTROL		2

FIGURE AND INDEX NUMBER	GROUP HYDRAULIC EQUIPMENT MAJOR ASSEMBLY PARKING BRAKE VALVE CONTROL PART NUMBER	1234567 NOMENCLATURE	CODE	UNITS PER ASSY
218 -	AN316-4R	••NUT -		2
-29	AN3-10	•BOLT -		2
	AN960-10L	•WASHER -		4
	AN310-3	•NUT -		2
	AN380-2-2	•PIN -		2
-30	151-58635-3	VALVE & COMPENSATOR ASSY - HYD PARKING COMPLETE (SEE FIG. 219)		REF
-31	151-58237	BRACKET - HYDRAULIC PARKING BRAKE CONTROL (SEE SECTION 3)		REF
		-000-		

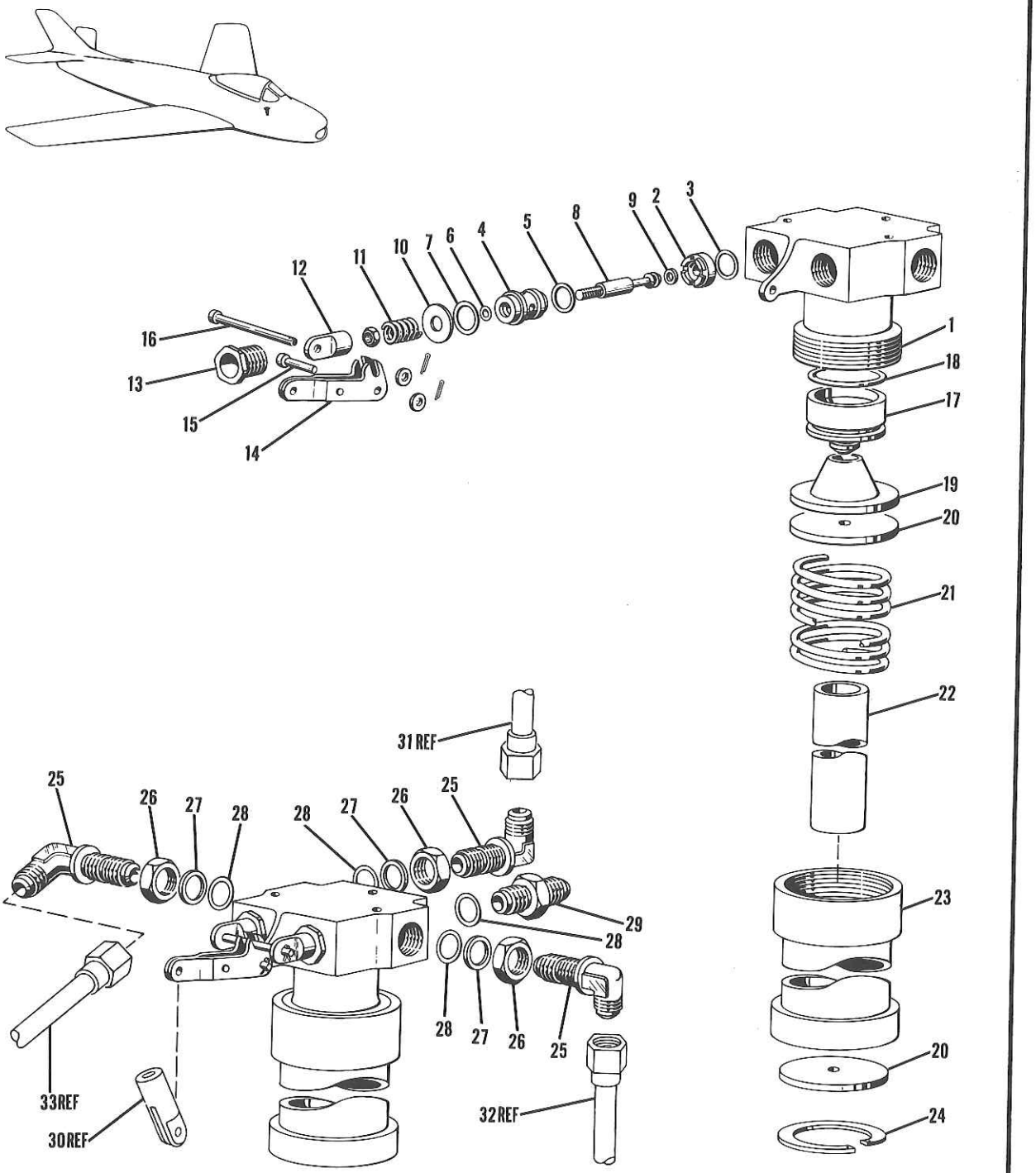

FIGURE 219 PARKING BRAKE COMPENSATOR VALVE

FIGURE AND INDEX NUMBER	GROUP HYDRAULIC EQUIPMENT MAJOR ASSEMBLY PARKING BRAKE COMPENSATOR VALVE PART NUMBER	1234567 NOMENCLATURE	CODE	UNITS PER ASSY
219 -	151-58635-3	VALVE & COMPENSATOR ASSY - HYD PARKING (SEE FIG. 190)		1
	151-58035-3	•VALVE ASSY - HYDRAULIC PARKING BRAKE		1
- 1	151-58408-3	••BODY - HYDRAULIC PARKING BRAKE VALVE		1
	13-71035	••NAME-PLATE - HYDRAULIC		1
	AN535-00-2	••SCREW - (NAME-PLATE ATTACHING)		2
- 2	161-58266	••SEAT - HYDRAULIC PARKING BRAKE VALVE PLG		2
- 3	AN6227B7	••PACKING -		2
- 4	161-58265	••RETAINER - HYD PARKING BRAKE VALVE SEAT		2
- 5	AN6227B9	••PACKING -		2
- 6	AN6227B3	••PACKING -		2
- 7	AN6227B11	••PACKING -		2
	161-58267	••PLUNGER ASSY - HYD PARKING BRAKE VALVE		2
- 8	161-58268	•••PLUNGER - HYDRAULIC PARKING BRAKE VALVE		1
- 9	161-58267-3	•••SEAL - HYD PARKING BRAKE VALVE PLUNGER (MAKE FROM SPEC 479-70(PLI))		1
-10	140-58228	••WASHER - HYDRAULIC PARKING BRAKE VALVE		2
-11	10S1	••SPRING - COMPRESSION (NAA)		2
	AN340DD8	••NUT -		2
-12	140-58235	••END - HYDRAULIC PARKING BRAKE VALVE PLG		2
-13	140-58230	••PLUG - HYDRAULIC PARKING BRAKE VALVE		2
-14	151-58233	••BELL-CRANK ASSY - HYDRAULIC PARKING BRAKE VALVE CONTROL		2
-15	AN393-11	••PIN -		1
-16	AN393-45	••PIN -		1
	AN960D10L	••WASHER -		2
	AN380-2-1	••COTTER-PIN -		2
-17	140-58261	••PISTON - HYDRAULIC PARKING BRAKE VALVE COMPENSATOR MPI		1
-18	AN6227B19	••PACKING -		1
-19	140-58263	••SPACER - HYD PARKING BRAKE VALVE COMPTR		1
-20	140-58262	••RETAINER - HYD PARKING BRAKE VALVE COMPTR		2
-21	D103	••SPRING - DIE (CSC)		1
-22	140-58450	••SPACER - HYDRAULIC PARKING BRAKE VALVE		1
-23	140-58260	••BARREL - HYD PARKING BRAKE VALVE COMPTR		1
-24	NAS50-175	••RING -		1
-25	AN833-4D	•ELBOW -		3
-26	AN6289D4	•NUT -		3
-27	AN6291-4	•RING -		3
-28	AN6290-4	•GASKET -		4
-29	AN815-4D	•UNION -		1
-30	151-58238	CLEVIS - HYDRAULIC PARKING BRAKE CONTROL (SEE FIG. 218)		REF
-31	170-58805-61	LINE ASSY - STARBOARD BRAKE PRESSURE (SEE FIG. 190)		REF
-32	170-58804-35	LINE ASSY - STARBOARD BRAKE PRESSURE (SEE FIG. 190)		REF
-33	172-58818-55	LINE ASSY - PORT BRAKE PRESSURE (SEE FIG. 190)		REF

-000-

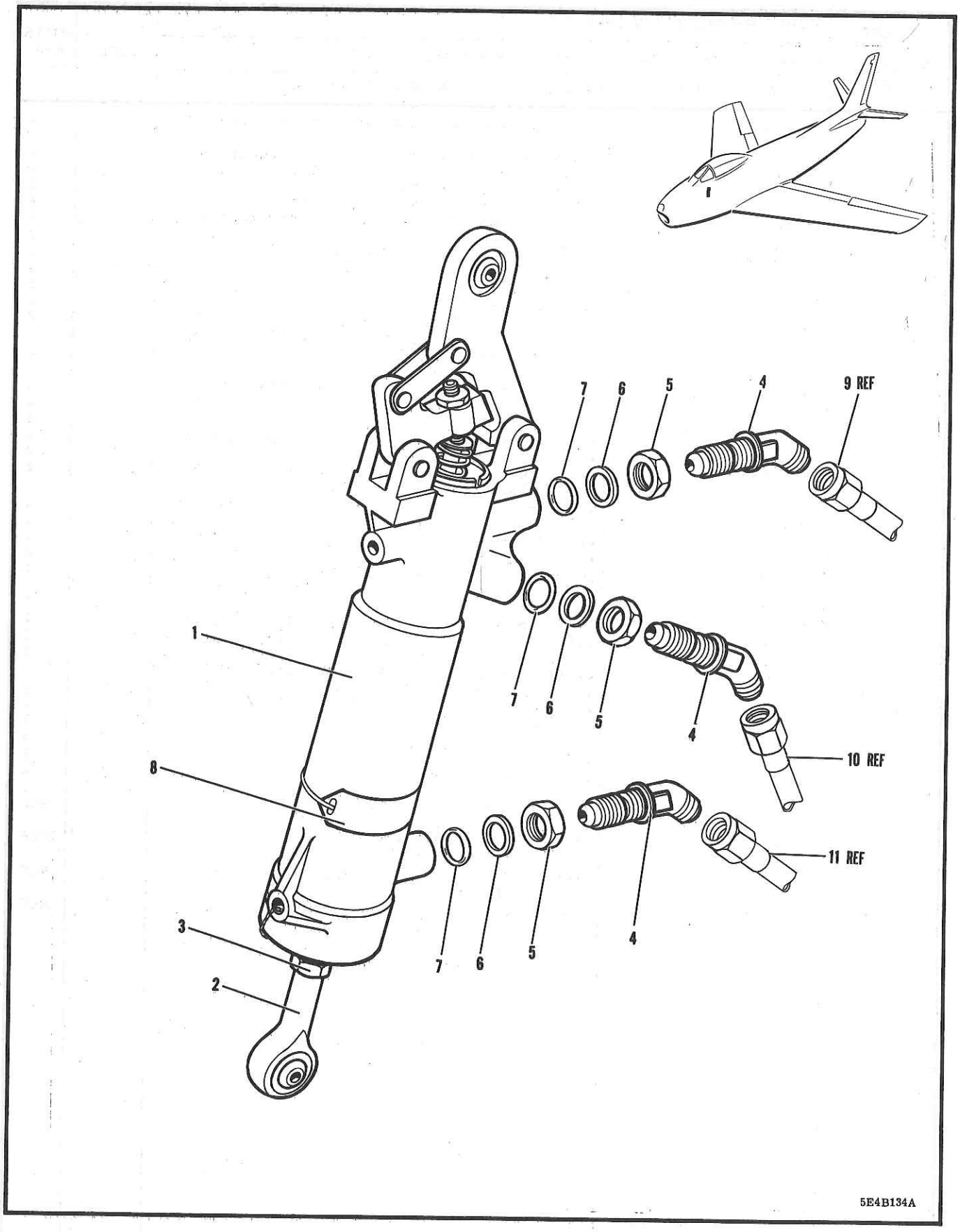

FIGURE 220 MASTER BRAKE CYLINDER

FIGURE AND INDEX NUMBER	GROUP HYDRAULIC EQUIPMENT MAJOR ASSEMBLY MASTER BRAKE CYLINDER PART NUMBER	1234567 NOMENCLATURE	CODE	UNITS PER ASSY
220 -	172-58650-10	CYLINDER ASSY - HYD MASTER BRAKE (COMPLETE) (SEE FIG. 190 & 191)		2
- 1	311706	•CYLINDER ASSY - POWER BOOST MASTER BRAKE (GLP) (FOR BRKDN SEE EO 15-45GA-4)		1
- 2	F45-19	•ROD-END - UNIBAL SPHERICAL BEARING (HEC)		1
	2W11A5	•LOCK-WASHER - TAB (NAA)		1
- 3	AN316-5R	•NUT -		1
- 4	AN837-4D	•ELBOW -		3
- 5	AN6289-4	•NUT -		3
- 6	AN6291-4	•RING -		3
- 7	AN6290-4	•GASKET -		3
- 8	13-71035	•NAME-PLATE - HYDRAULIC		1
- 9	3H3-4-0280	HOSE ASSY - PLASTIC COVERED (NAA) (BRAKE RETURN) (SEE FIG. 190)		REF
-10	3H3-4-0140	HOSE ASSY - PLASTIC COVERED (NAA) (UTILITY PRESSURE) (SEE FIG. 190)		REF
-11	3H3-4-0150	HOSE ASSY - PLASTIC COVERED (NAA) (BRAKE PRESSURE) (SEE FIG. 190)		REF
		-000-		

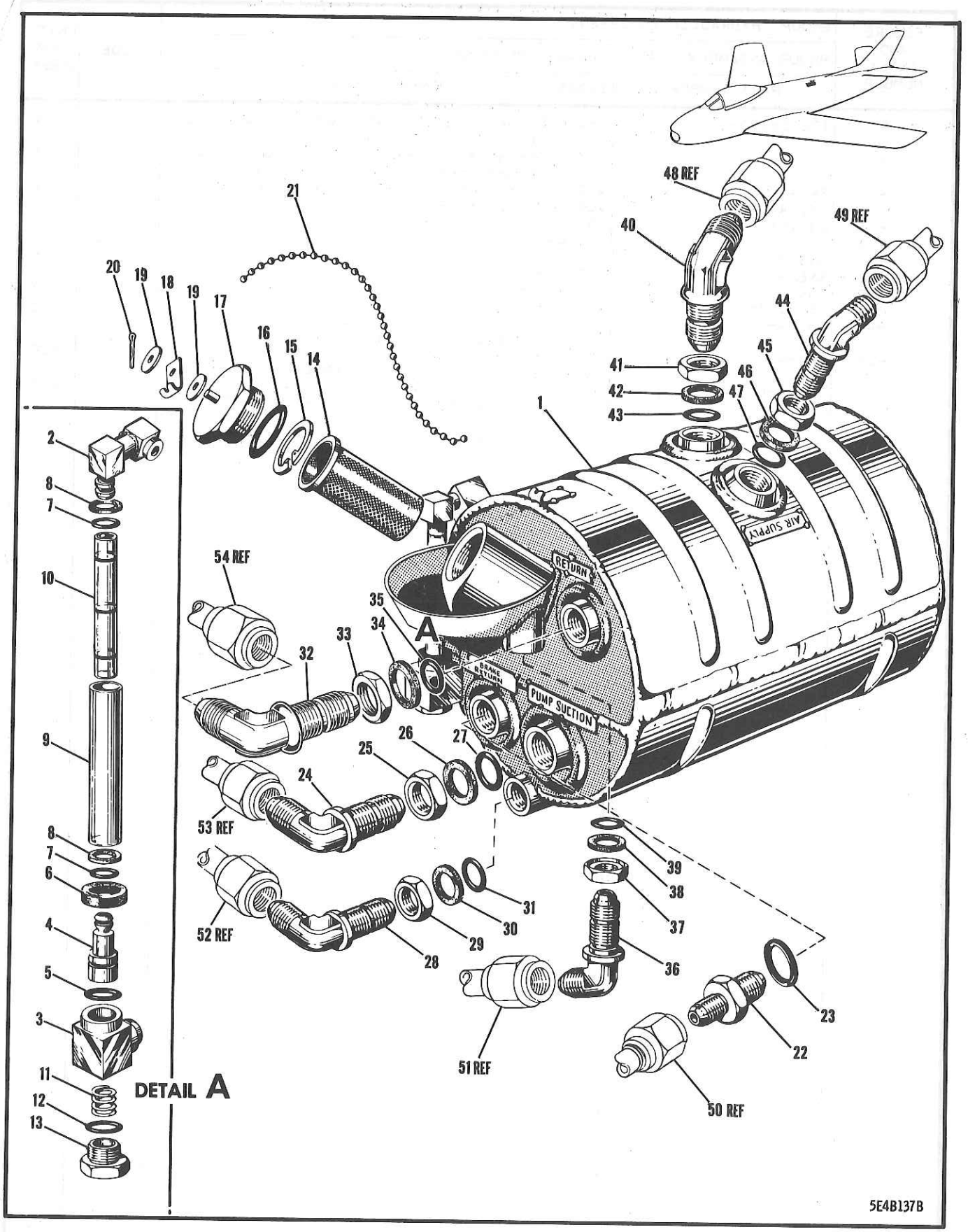

FIGURE 221 UTILITY SYSTEM RESERVOIR

FIGURE AND INDEX NUMBER	GROUP HYDRAULIC EQUIPMENT MAJOR ASSEMBLY UTILITY SYSTEM RESERVOIR PART NUMBER	1234567 NOMENCLATURE	CODE	UNITS PER ASSY
221 -	170-58651-7	RESERVOIR ASSY - HYDRAULIC UTILITY SYSTEM (COMPLETE) (SEE FIG. 193)	001-100	1
	170-58651-807	RESERVOIR ASSY - HYD UTILITY SYS (COMPLETE)	101-	1
	170-58051-3	.RESERVOIR ASSY - HYDRAULIC SYSTEM	001-100	1
	170-58051-803	.RESERVOIR ASSY - HYDRAULIC SYSTEM	101-300	1
	170-58051-5	.RESERVOIR ASSY - HYDRAULIC SYSTEM	301-	1
- 1	170-58202-3	..SHELL ASSY - HYD UTILITY SYSTEM RESERVOIR		1
- 2	170-58239	...FITTING ASSY - HYD RSRVR SIGHT GAUGE UP.		1
- 3	170-58240	...FITTING - HYDRAULIC RSRVR SIGHT GA BOT.		1
- 4	170-58241	..RETAINER - HYDRAULIC RSRVR SIGHT GA GLASS		1
- 5	AN6227B7	..PACKING -		1
- 6	2W1R-29-28-250	..WASHER - PLAIN (NAA)		1
- 7	AN6227B3	..PACKING -		2
- 8	2W1SR-16-16-62	..WASHER - PLAIN (NAA)		2
- 9	170-58247	..SHIELD - HYDRAULIC UTILITY RSRVR SIGHT GA		1
-10	170-58237	..GLASS - HYDRAULIC UTILITY RSRVR SIGHT GA	001-100	1
	170-58237-800	..GLASS - HYDRAULIC UTILITY RSRVR SIGHT GA	101-300	1
	170-58237-3	..GLASS - HYDRAULIC UTILITY RSRVR SIGHT GA	301-	1
-11	161-58827	..SPRING - COMPRESSION		1
-12	AN6290-8	..GASKET -		1
-13	AN814-8D	..PLUG & BLEEDER -		1
	13-71035	..NAME-PLATE - HYDRAULIC		1
	AN535-00-2	..SCREW - (NAME-PLATE ATTACHING)		2
-14	151-58194	..STRAINER ASSY - HYD SYSTEM RSRVR FILLER		1
-15	NAS50-137	..RING -		1
-16	AN6227B26	..PACKING -		1
	161-58258	..CAP ASSY - HYDRAULIC SYSTEM RESERVOIR		1
-17	161-58257	...PLUG - HYDRAULIC SYSTEM RESERVOIR		1
-18	161-58258-3	...CLIP - HYDRAULIC SYSTEM RESERVOIR BALL CHAIN ATTACHING		1
-19	2W1-10-14-40	...WASHER - PLAIN (NAA)		2
-20	AN380-1-1	...COTTER-PIN -		1
-21	9C1-1-5	...CHAIN - BEAD (NAA)		1
-22	AN919-12D	.REDUCER -		1
-23	AN6290-8	.GASKET -		1
-24	AN833-12D	.ELBOW -		1
-25	AN6289D12	.NUT -		1
-26	AN6291-12	.RING -		1
-27	AN6290-12	.GASKET -		1
-28	AN833-6D	.ELBOW -		1
-29	AN6289D6	.NUT -		1
-30	AN6291-6	.RING -		1
-31	AN6290-6	.GASKET -		1
-32	AN837-8D	.ELBOW -		1
-33	AN6289D8	.NUT -		1
-34	AN6291-8	.RING -		1
-35	AN6290-8	.GASKET -		1
-36	AN837-4D	.ELBOW -		1
-37	AN6289D4	.NUT -		1
-38	AN6291-4	.RING -		1
-39	AN6290-4	.GASKET -		1
-40	AN833-6D	.ELBOW -		1
-41	AN6289D6	.NUT -		1
-42	AN6291-6	.RING -		1
-43	AN6290-6	.GASKET -		1
-44	AN833-4D	.ELBOW -		1
-45	AN6289D4	.NUT -		1
-46	AN6291-4	.RING -		1
-47	AN6290-4	.GASKET -		1
-48	13A-71820-35	LINE ASSY - UTILITY RESERVOIR VENT (SEE FIG. 193)		REF

FIGURE AND INDEX NUMBER	GROUP HYDRAULIC EQUIPMENT MAJOR ASSEMBLY UTILITY SYSTEM RESERVOIR PART NUMBER	1234567 NOMENCLATURE	CODE	UNITS PER ASSY
221 -49	13A-71820-33	LINE ASSY - UTILITY RSRVR AIR-PRESSURE (SEE FIG. 193)		REF
-50	13A-71826-13	LINE ASSY - BRAKE RETURN & PUMP DRAIN (SEE FIG. 193)		REF
-51	13A-71826-5	LINE ASSY - UTILITY PUMP CASE DRAIN (SEE FIG. 193)		REF
-52	13A-71826-15	LINE ASSY - RESERVOIR DRAIN (SEE FIG. 193)		REF
-53	13A-71820-3	LINE ASSY - UTILITY SUCTION (SEE FIG. 196)		REF
-54	172-58810-15	LINE ASSY - UTILITY RETURN (SEE FIG. 193)		REF
		-000-		

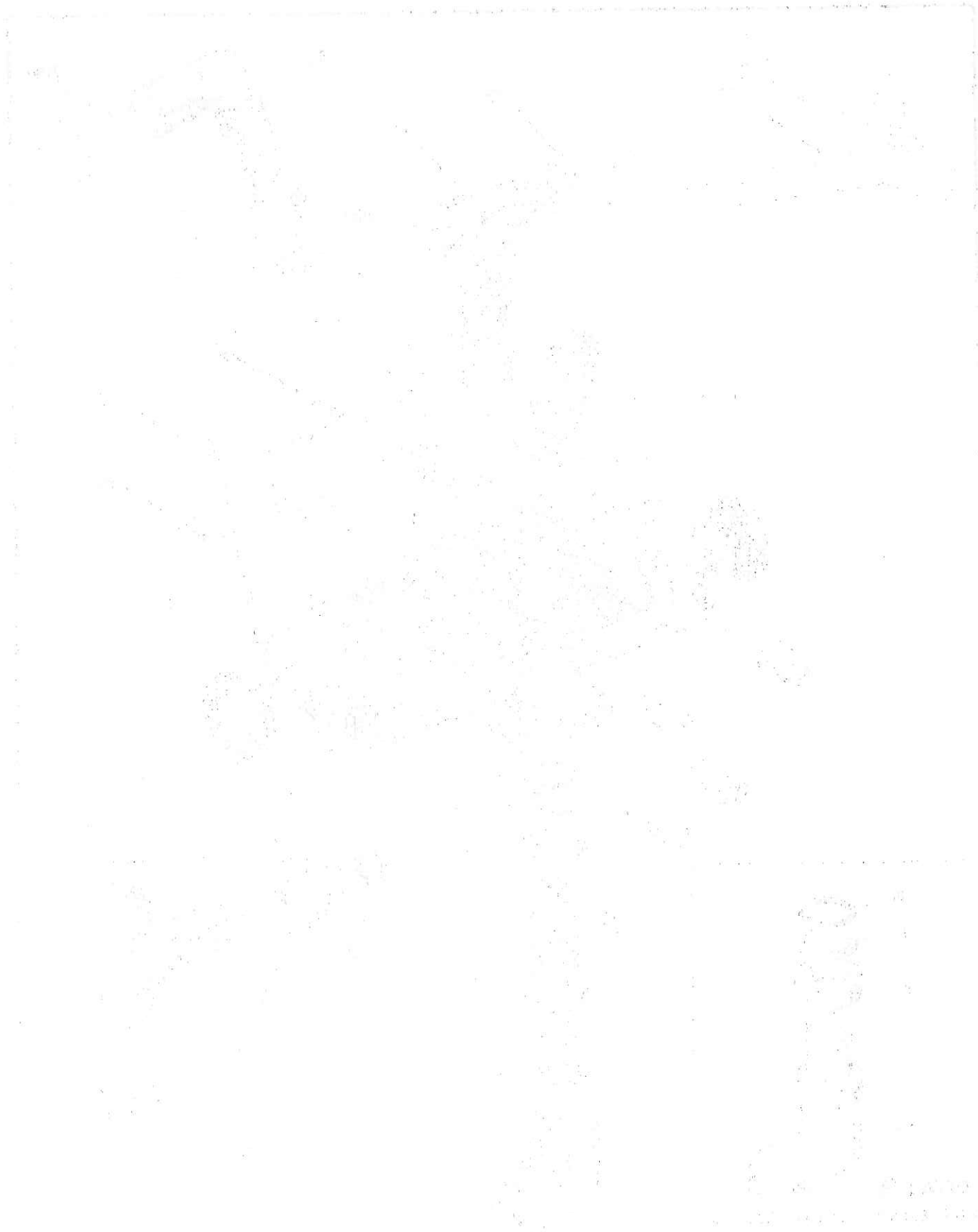

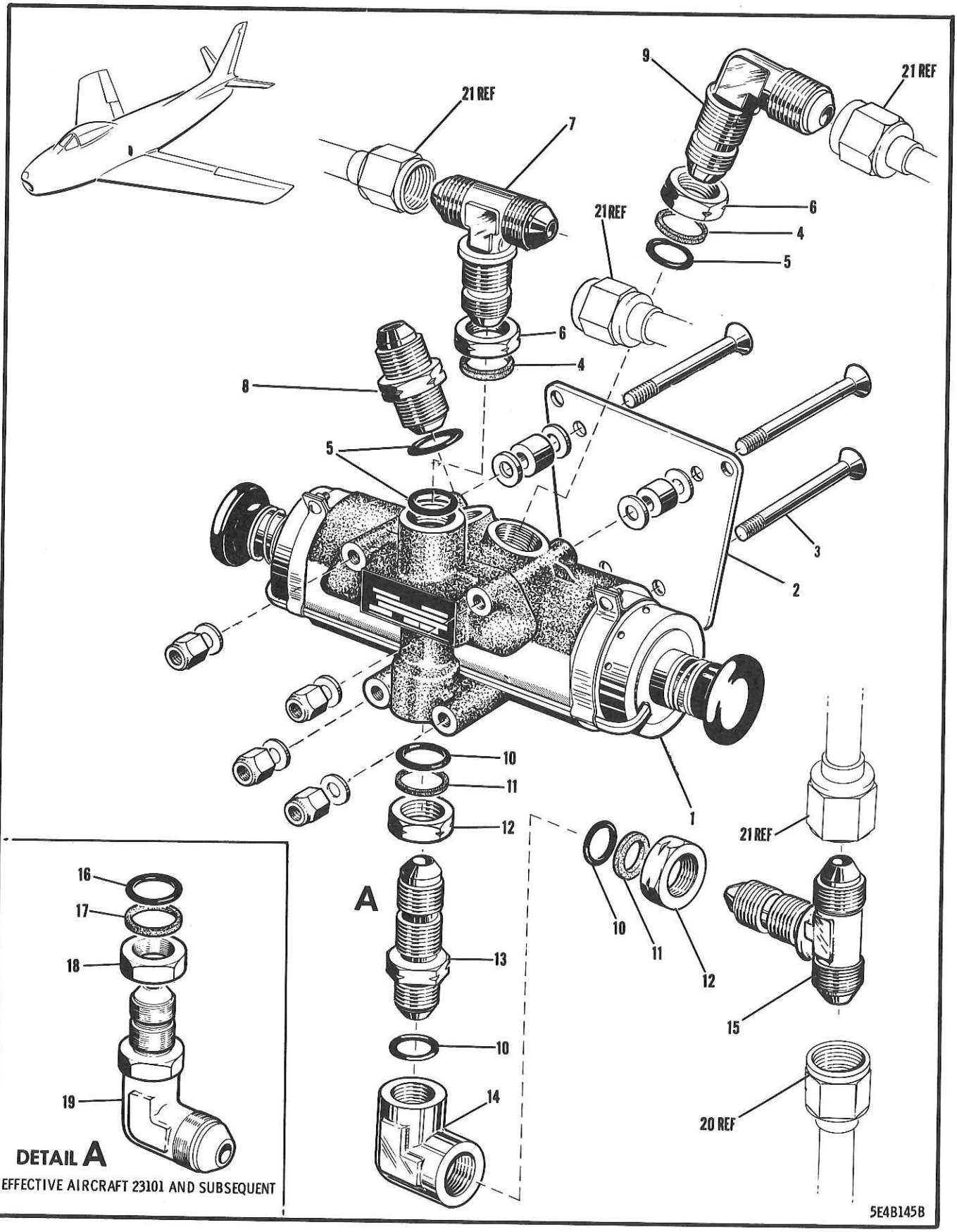

FIGURE 222 SPEEDBRAKE SELECTOR VALVE

FIGURE AND INDEX NUMBER	GROUP HYDRAULIC EQUIPMENT MAJOR ASSEMBLY SPEEDBRAKE SELECTOR VALVE PART NUMBER	1234567 NOMENCLATURE	CODE	UNITS PER ASSY
222 -	13A-71301	VALVE ASSY - HYDRAULIC SPEEDBRAKE SELECTOR (SEE FIG. 195)	001-100	1
	13A-71301-3	VALVE ASSY - HYDRAULIC SPEEDBRAKE SELECTOR	101-	1
- 1	9600	.VALVE ASSY - ELECTRIC SELECTOR (WHC)		1
- 2	13A-71114	.PLATE - HYDRAULIC SPEEDBRAKE SELECTOR VAL		1
- 3	NAS334-34	.BOLT -		4
	NAS43DD-4-26	.SPACER -		4
	AN960-416	.WASHER -		12
	AN365-428	.NUT -		4
- 4	AN6291-8	.RING -		2
- 5	AN6290-8	.GASKET -		3
- 6	AN6289D8	.NUT -		2
- 7	AN834-8D	.TEE -		1
- 8	AN815-8D	.UNION -		1
- 9	AN833-8D	.ELBOW -		1
-10	AN6290-8	.GASKET -	001-100	3
-11	AN6291-8	.RING -	001-100	2
-12	AN6289D8	.NUT -	001-100	2
-13	AN832-8	.UNION -	001-100	1
-14	AN939-8	.ELBOW -	001-100	1
-15	AN834-8D	.TEE -	001-100	1
-16	AN6290-8	.GASKET -	101-	1
-17	AN6291-8	.RING -	101-	1
-18	AN6289D8	.NUT -	101-	1
-19	AN833-8D	.ELBOW -	101-	1
-20	13A-71830-15	LINE ASSY - UTILITY PRESSURE (SEE FIG. 196)		REF
-21	CROSS REFERENCE	LINE ASSY - (SEE FIG. 195)		REF

-000-

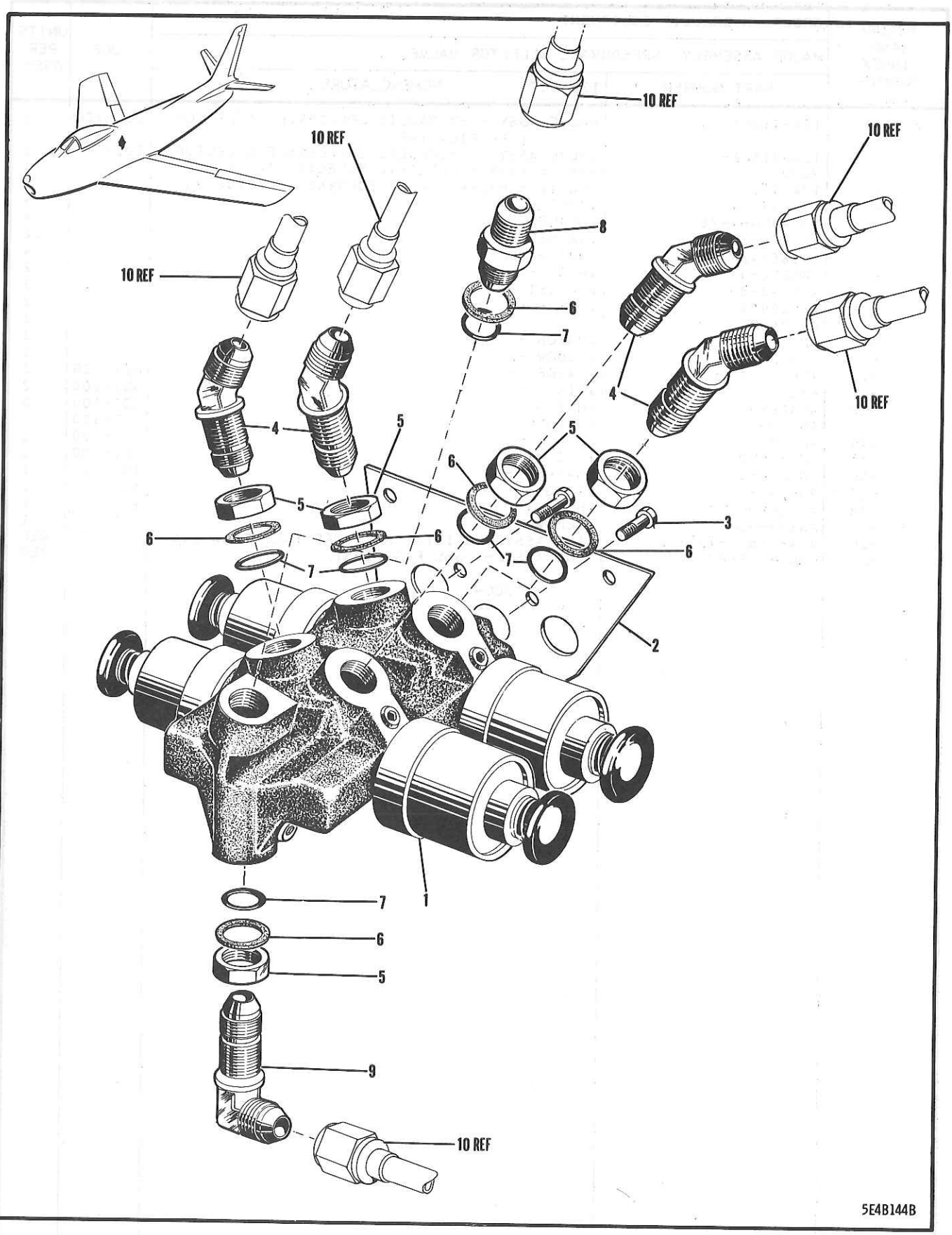

FIGURE 223 MAIN GEAR FAIRING DOOR SELECTOR VALVE

FIGURE AND INDEX NUMBER	GROUP HYDRAULIC EQUIPMENT MAJOR ASSEMBLY MAIN GEAR FAIRING DOOR SELECTOR VALVE PART NUMBER	1234567 NOMENCLATURE	CODE	UNITS PER ASSY
223 -	13A-71406-3	VALVE ASSY - HYDRAULIC LANDING GEAR & FAIR. DOOR SELECTOR (SEE FIG. 197)		1
- 1	11060-1	•VALVE ASSY - SOLENOID OPR SELECTOR (MAR)		1
		OR		
	12120	•VALVE ASSY - SOLENOID OPR 6-WAY (MAR) (SUPPLIED WITH 13A-71226 BASE-PLATE & 11363 BOLT (MAR) 4 REQ)		
- 2	13A-71226	•BASE-PLATE - HYDRAULIC ALTERNATE GEAR & FAIRING DOOR SELECTOR VALVE		1
- 3	11363	•BOLT - (MAR) (HYDRAULIC VALVE BASE)		4
- 4	AN837-6D	•ELBOW -		4
- 5	AN6289-6	•NUT -		5
- 6	AN6291-6	•RING -		6
- 7	AN6290-6	•GASKET -		6
- 8	AN815-6D	•UNION -		1
- 9	AN833-6D	•ELBOW -		1
-10	CROSS REFERENCE	LINE ASSY - (SEE FIG. 197)		REF
		-000-		

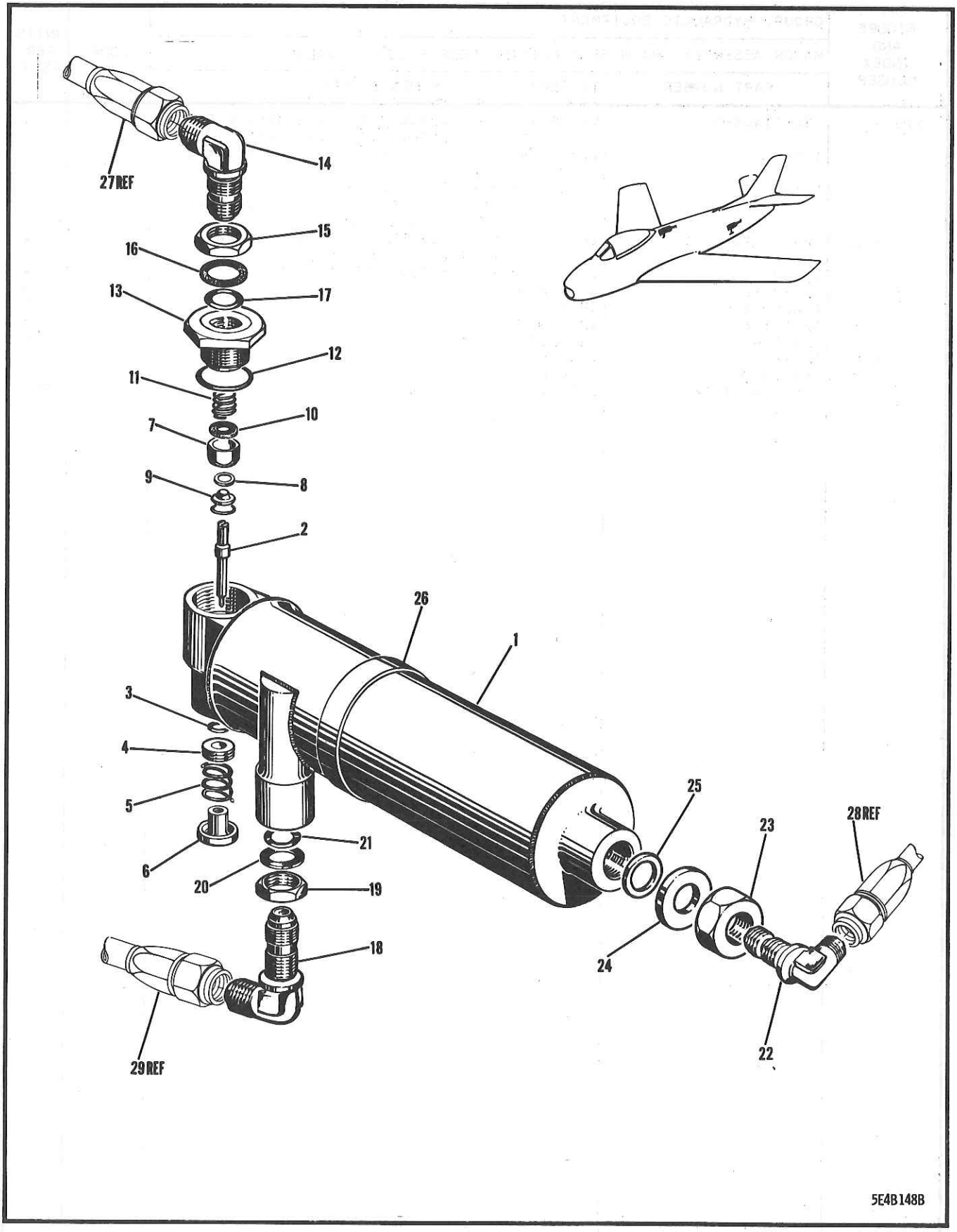

FIGURE 224 NORMAL HYDRAULIC RESERVOIR

FIGURE AND INDEX NUMBER	GROUP HYDRAULIC EQUIPMENT MAJOR ASSEMBLY NORMAL HYDRAULIC RESERVOIR PART NUMBER	1234567 NOMENCLATURE	CODE	UNITS PER ASSY
224 -	13A-71405	RESERVOIR ASSY - HYDRAULIC SURFACE CONTROL (COMPLETE) (SEE FIG. 198)		1
	172-58038-3	.RESERVOIR ASSY - HYDRAULIC SUR CTL		1
- 1	172-58137	..SHELL ASSY - HYDRAULIC PWR/CTL RESERVOIR		1
- 2	165-58153	..PLUNGER - HYDRAULIC POWER CONTROL RESERVOIR VALVE OPERATING		1
- 3	AN6227B5	..PACKING -		1
- 4	165-58155	..BUSHING - HYDRAULIC SURFACE CONTROL RESERVOIR VALVE PLUNGER		1
- 5	142-52434	..SPRING - HYDRAULIC POWER CONTROL RESERVOIR VALVE PLUNGER		1
- 6	165-58154	..BUTTON - HYDRAULIC POWER CONTROL RESERVOIR VALVE PLUNGER		1
	165-58479	..POPPET ASSY - HYDRAULIC SURFACE CONTROL RESERVOIR VALVE		1
- 7	165-58367	...POPPET - HYDRAULIC POWER CONTROL RESERVOIR VALVE		1
- 8	165-58476	...GASKET - HYDRAULIC POWER CONTROL RESERVOIR POPPET		1
- 9	165-58368	...RETAINER - HYDRAULIC POWER CONTROL RESERVOIR VALVE SEAL		1
-10	AN960C516L	..WASHER -		AR
-11	165-58475	..SPRING - COMPRESSION		1
-12	AN6290-12	..GASKET -		1
-13	165-58156	..BUSHING -		1
-14	AN833-6D	.ELBOW -		1
-15	AN6289-6	.NUT -		1
-16	AN6291-6	.RING -		1
-17	AN6290-6	.GASKET -		1
-18	AN833-8D	.ELBOW -		1
-19	AN6289D8	.NUT -		1
-20	AN6291-8	.RING -		1
-21	AN6290-8	.GASKET -		1
-22	AN833-12D	.ELBOW -		1
-23	AN6289D12	.NUT -		1
-24	AN6291-12	.RING -		1
-25	AN6290-12	.GASKET -		1
-26	172-58146	.NAME-PLATE - HYDRAULIC NORMAL SURFACE CONTROL RESERVOIR		1
	AN520-10R10	.SCREW - (NAME-PLATE ATTACHING)		1
	AN960D10L	.WASHER -		1
	AN365-1032	.NUT -		1
-27	13A-71821-13	LINE ASSY - NORMAL SURFACE CONTROL (SEE FIG. 198)		REF
-28	13A-71821-3	LINE ASSY - NORMAL SURFACE CONTROL SUCTION (SEE FIG. 198)		REF
-29	13A-71831-11	LINE ASSY - NORMAL SURFACE CONTROL RETURN (SEE FIG. 198)		REF

-000-

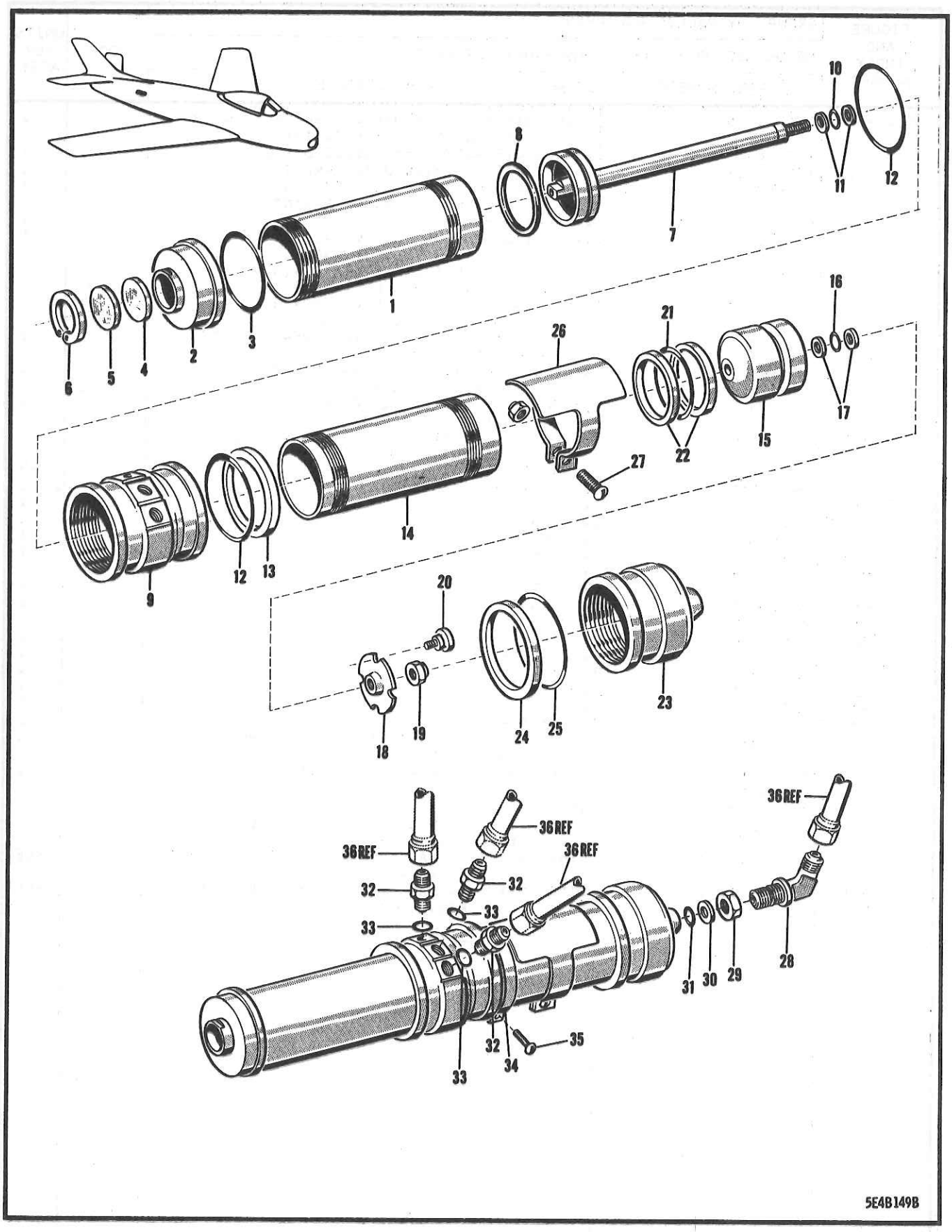

FIGURE 225 NORMAL SURFACE CONTROL ACCUMULATOR

FIGURE AND INDEX NUMBER	GROUP HYDRAULIC EQUIPMENT MAJOR ASSEMBLY NORMAL SURFACE CONTROL ACCUMULATOR PART NUMBER	1234567 NOMENCLATURE	CODE	UNITS PER ASSY
225 -	13A-71305	ACCUMULATOR ASSY - NORMAL SURFACE CONTROL HYD (COMPLETE) (SEE FIG. 198)		1
	177-58047-800	•ACCUMULATOR ASSY - 60-CU/IN SELF-DISPLACING HYDRAULIC (SEE FIG. 213 & 239)		1
- 1	165-58118	••CYLINDER - 60-CU/IN ACCUMULATOR RETURN		1
- 2	165-58376	••CAP - ACCUMULATOR		1
- 3	AN6230B13	••GASKET -		1
- 4	165-58375	••FILTER - ACCUMULATOR		1
- 5	165-58112	••SCREEN ASSY - ACCUMULATOR		1
- 6	NAS50-118	••RING -		1
- 7	165-58405-800	••ROD ASSY - ACCUMULATOR		1
- 8	AN6227B37	••PACKING -		1
- 9	165-58115	••HEAD ASSY - ACCUMULATOR		1
-10	AN6227B10	••PACKING -		1
-11	165-58474	••RING - HYDRAULIC DELTA BACK-UP		2
-12	AN6230B14	••GASKET -		2
-13	5R14-14	••RING - SPIRAL BACK-UP (NAA)		1
		OR		
	MS28783-14	••RING - TEFLON BACK-UP		
-14	165-58117	••CYLINDER - 60-CU/IN SELF-DISPLACING HYDRAULIC ACCUMULATOR PRESSURE		1
-15	165-58403	••PISTON - 60-CU/IN SELF-DISPLACING HYDRAULIC ACCUMULATOR		1
-16	AN6227B10	••PACKING -		1
-17	AN6246-10	••RING -		2
-18	165-58404	••RETAINER - ACCUMULATOR O-RING		1
-19	AN363-720	••NUT -		1
-20	165-58410	••SCREW - RETAINER		4
-21	AN6227B37	••PACKING -		1
-22	5R16-37	••RING - SPIRAL BACK-UP (NAA).		2
-23	165-58372-5	••END - 60-CU/IN HYDRAULIC ACCUM CYLINDER		1
-24	5R14-14	••RING - SPIRAL BACK-UP (NAA)		1
		OR		
	MS28783-14	••RING - TEFLON BACK-UP		
-25	AN6230B14	••GASKET -		1
-26	13-71083-800	••NAME-PLATE - HYDRAULIC ACCUMULATOR		1
-27	AN515-8R12	••SCREW - (NAME-PLATE ATTACHING)		1
	2W1AL12-18-64	••WASHER - PLAIN (NAA)		1
	AN365-832	••NUT -		1
-28	AN833-4D	•ELBOW -		1
-29	AN6289-4	•NUT -		1
-30	AN6291-4	•RING -		1
-31	AN6290-4	•GASKET -		1
-32	AN919-12D	•REDUCER -		3
-33	AN6290-6	•GASKET -		3
-34	170-58259-3	•NAME-PLATE - HYDRAULIC ACCUMULATOR		1
-35	AN520-10R10	•SCREW - (NAME-PLATE ATTACHING)		1
	AN960D10	•WASHER -		1
	AN365-1032	•NUT -		1
-36	CROSS REFERENCE	LINE ASSY - NORMAL SURFACE CONTROL (SEE FIG. 198)		REF

-000-

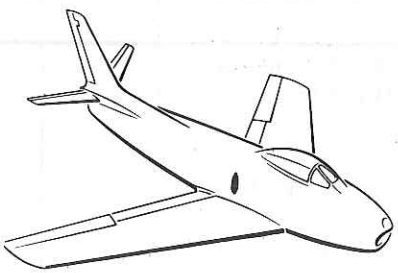

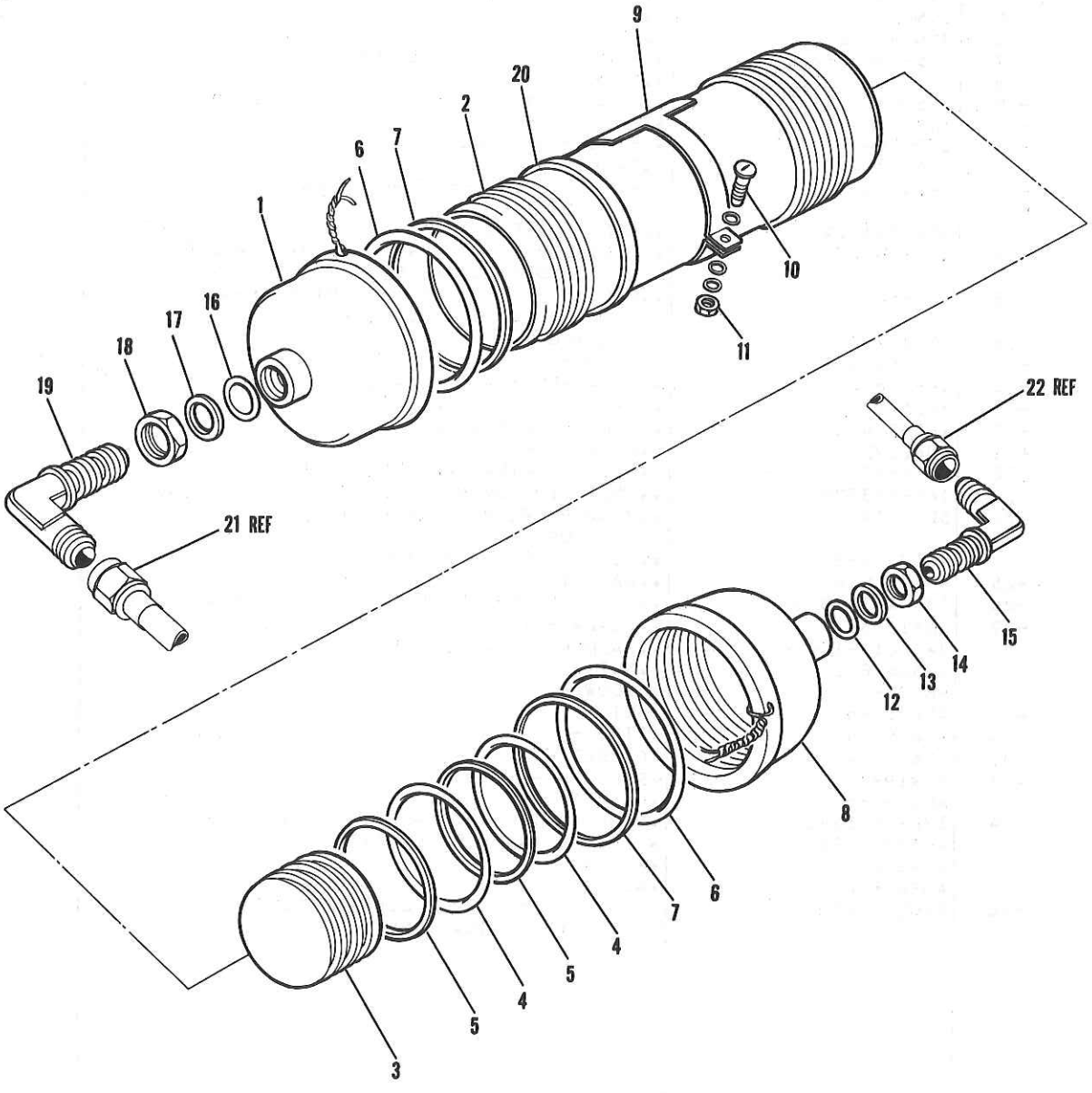

FIGURE 226 UTILITY SYSTEM 200 CUBIC INCH ACCUMULATOR

FIGURE AND INDEX NUMBER	GROUP HYDRAULIC EQUIPMENT MAJOR ASSEMBLY UTILITY SYSTEM 200-CU/IN ACCUMULATOR PART NUMBER	1234567 NOMENCLATURE	CODE	UNITS PER ASSY
226 -	13A-71404	ACCUMULATOR ASSY - HYDRAULIC 200-CU/IN (SEE FIG. 196)	001-100	1
	161-58095	•ACCUMULATOR ASSY - HYDRAULIC 200-CU/IN	001-100	1
- 1	161-58236-5	••END - HYDRAULIC 200-CU/IN ACCUM CYLINDER	001-100	1
- 2	161-58234	••CYLINDER - HYDRAULIC 200-CU/IN ACCUM	001-100	1
- 3	161-58235	••PISTON - HYDRAULIC 200-CU/IN ACCUMULATOR	001-100	1
- 4	AN6227B49	••PACKING -	001-100	2
- 5	AN6246-49	••RING -	001-100	2
- 6	AN6230B26	••GASKET -	001-100	2
- 7	AN6244-26	••RING -	001-100	2
- 8	161-58236-3	••END - HYDRAULIC 200-CU/IN ACCUM CYLINDER	001-100	1
- 9	13-71033	••NAME-PLATE - HYDRAULIC ACCUMULATOR	001-100	1
-10	AN515-8R10	••SCREW -	001-100	1
	2W1AL10-16-64	••WASHER - PLAIN (NAA)	001-100	3
-11	AN365-832	••NUT -	001-100	1
-12	AN6290-4	•GASKET -	001-100	1
-13	AN6291-4	•RING -	001-100	1
-14	AN6289D4	•NUT -	001-100	1
-15	AN833-4D	•ELBOW -	001-100	1
-16	AN6290-8	•GASKET -	001-100	1
-17	AN6291-8	•RING -	001-100	1
-18	AN6289-8	•NUT -	001-100	1
-19	13A-71407	•FITTING - ACCUMULATOR FLUID END BHD ELBOW	001-100	1
-20	13A-71408	•NAME-PLATE - HYDRAULIC UTILITY SYSTEM CASE DRAIN DISCONNECT SUPPORT	001-100	1
	AN520-10R10	•SCREW -	001-100	1
	AN960D10	•WASHER -	001-100	3
	AN365-1032	•NUT -	001-100	1
-21	13A-71830-15	LINE ASSY - UTILITY PRESSURE (SEE FIG. 196)		REF
-22	13A-71830-59	LINE ASSY - ACCUMULATOR AIR-PRESSURE (SEE FIG. 196)		REF

-000-

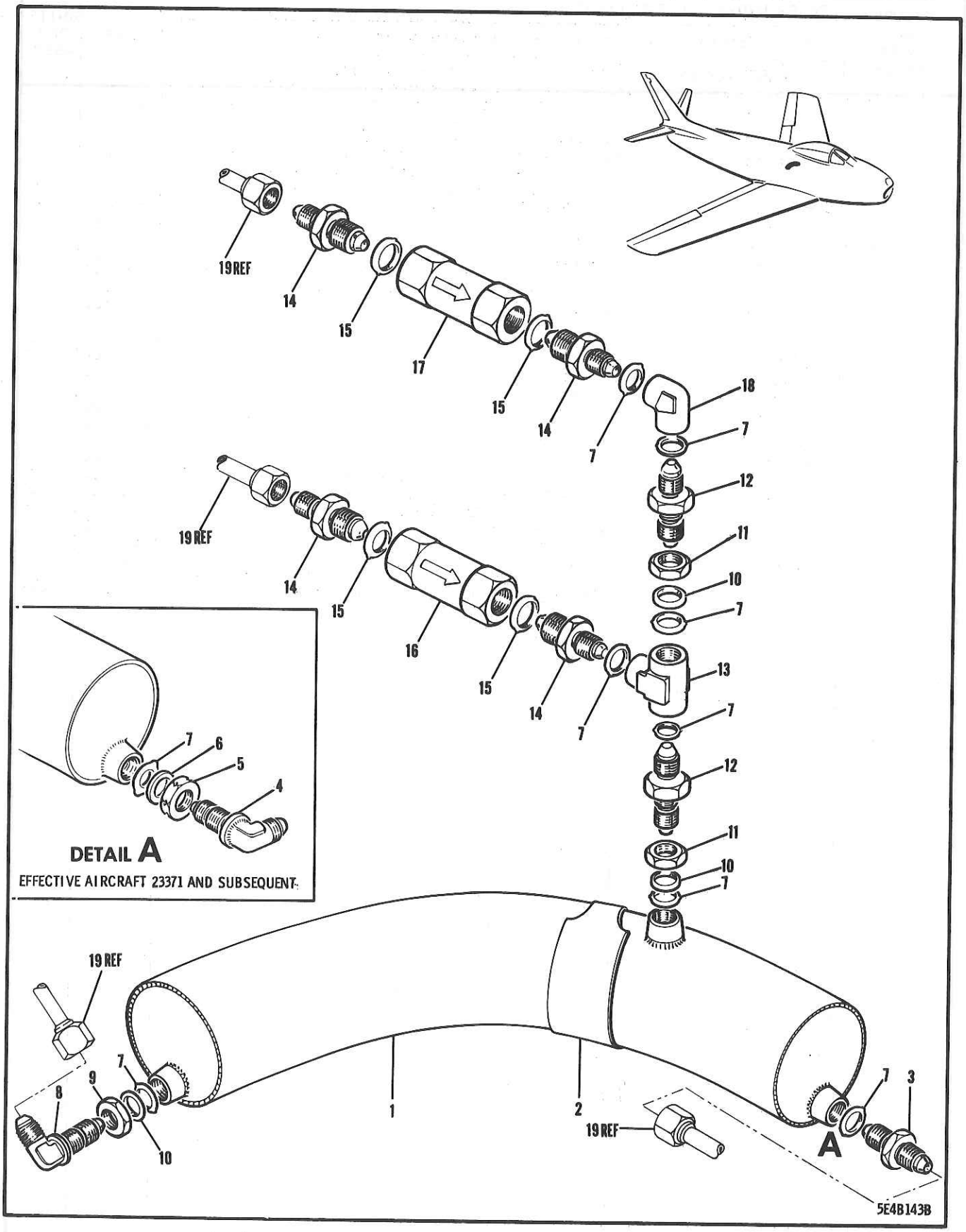

FIGURE 227 AIR-PRESSURE ACCUMULATOR

FIGURE AND INDEX NUMBER	GROUP HYDRAULIC EQUIPMENT MAJOR ASSEMBLY AIR-PRESSURE ACCUMULATOR PART NUMBER	1234567 NOMENCLATURE	CODE	UNITS PER ASSY
227 -	170-58650-950	RESERVOIR ASSY - HYDRAULIC AIR STORAGE (SEE FIG. 196)	001-370	1
	170-58650-952	RESERVOIR ASSY - HYDRAULIC AIR STORAGE	371-	1
- 1	170-58050	.RESERVOIR ASSY - HYDRAULIC AIR STORAGE UT		1
- 2	13-71034	..NAME-PLATE - HYD AIR STORAGE RSRVR ASSY		1
- 3	AN815-4D	.UNION -	001-370	1
- 4	AN833-4D	.ELBOW -	371-	1
- 5	AN6289-4	.NUT -	371-	1
- 6	AN6291-4	.RING -	371-	1
- 7	AN6290-4	.GASKET -		8
- 8	AN833-4D	.ELBOW -		1
- 9	AN6289D4	.NUT -		1
-10	AN6291-4	.RING -		3
-11	AN6289-4	.NUT -		2
-12	AN832-4D	.UNION -		2
-13	AN926-4D	.TEE -		1
-14	AN919-6D	.REDUCER -		4
-15	AN6290-6	.GASKET -		4
-16	4-2050-77	.CHECK-VALVE - (PAC) (HYDRAULIC)		1
-17	311826-1	.REGULATOR - (GLP)		1
-18	AN928-4D	.ELBOW -		1
-19	CROSS REFERENCE	LINE ASSY - (SEE FIG. 196)		REF

-000-

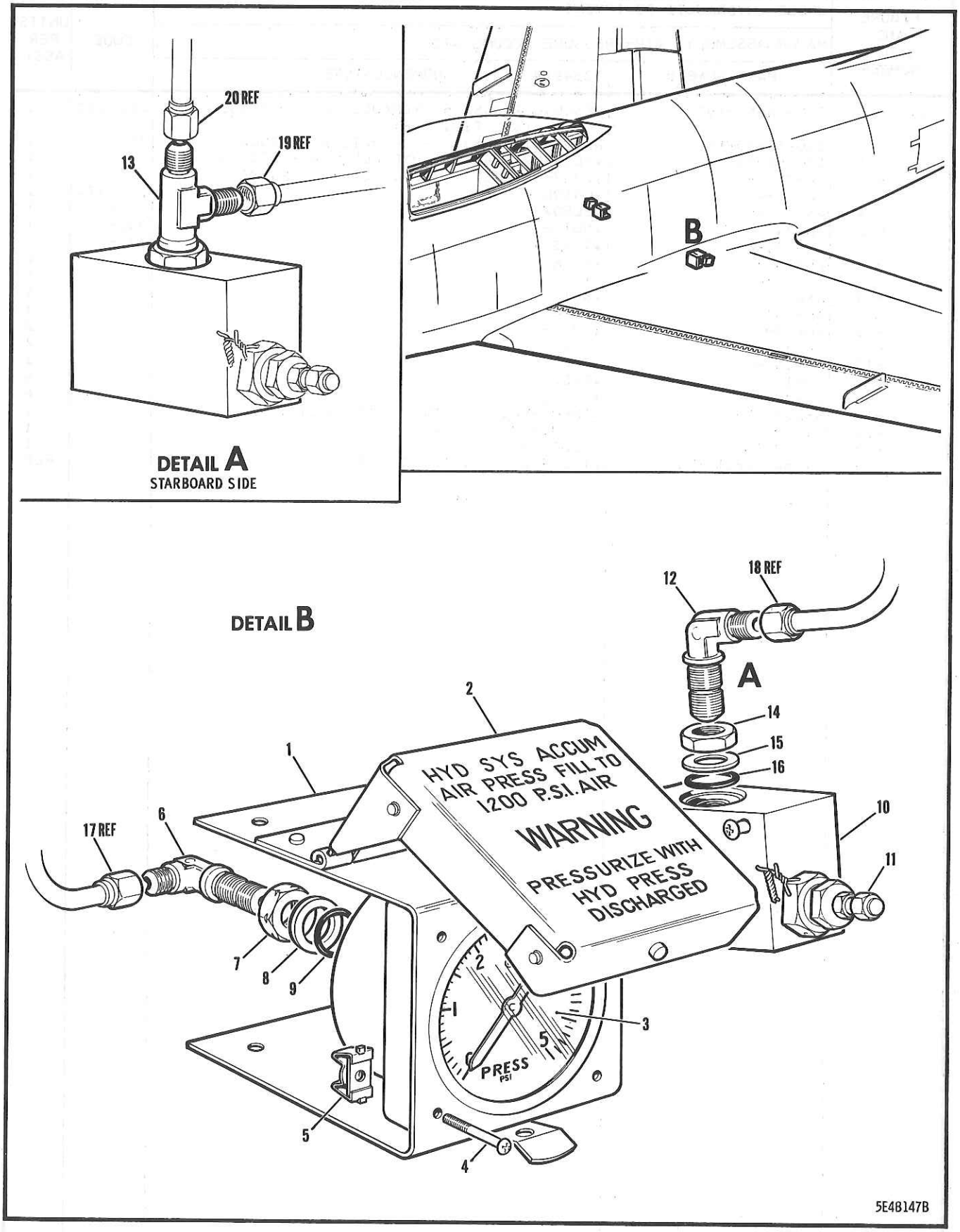

FIGURE 228 ACCUMULATOR AIR-PRESSURE GAUGE & VALVE

FIGURE AND INDEX NUMBER	GROUP HYDRAULIC EQUIPMENT MAJOR ASSEMBLY ACCESS AIR-PRESSURE GAUGE & VALVE PART NUMBER	1234567 NOMENCLATURE	CODE	UNITS PER ASSY
228 -	170-58639-903	GAUGE ASSY - HYDRAULIC ACCUMULATOR A/PRESS COMPLETE STA 205 CANTED PORT SIDE (SEE FIG. 198)		1
	170-58639-901	GAUGE ASSY - HYDRAULIC ACCUMULATOR A/PRESS COMPLETE STA 205 CANTED STBD SIDE (SEE FIG. 196)	001-100	1
	170-58173-11	.BRACKET ASSY - HYDRAULIC ACCUM A/PRESS GAUGE FUS STA 205 CANTED PORT SIDE		1
	170-58173-7	.BRACKET ASSY - HYDRAULIC ACCUM A/PRESS GAUGE FUS STA 205 CANTED STBD SIDE	001-100	1
- 1	170-58255	..BRACKET ASSY - HYDRAULIC ACCUMULATOR A/PRESS GAUGE FUS STA 205 CANTED		1
	170-58253	...SPRING - HYDRAULIC AIR GAUGE COVER FLAT		1
- 2	170-58248-15	..COVER ASSY - HYDRAULIC ACCUMULATOR AIR-PRESSURE BRACKET PORT SIDE		1
	170-58248-5	..COVER ASSY - HYDRAULIC ACCUMULATOR AIR-PRESSURE BRACKET STARBOARD SIDE	001-100	1
- 3	AN5771T7A	.GAUGE - SINGLE 1-7/8 DIAL PRESS. (G.F.E.)		1
- 4	AN515-6R12	.SCREW - (GAUGE TO BRACKET ATTACHING)		4
- 5	A6939-632-375	.SPEED-NUT - CAGE TYPE (TIN) (FRT INST MTG)		4
- 6	AN833-4D	.ELBOW -		1
- 7	AN6289-4	.NUT -		1
- 8	AN6291-4	.RING -		1
- 9	AN6290-4	.GASKET -		1
	170-58643-801	VALVE ASSY - HYDRAULIC ACCUM AIR MOUNT PORT SIDE (COMPLETE) (SEE FIG. 198)		1
	170-58643-802	VALVE ASSY - HYDRAULIC ACCUM AIR MOUNT STBD SIDE (COMPLETE) (SEE FIG. 196)	001-100	1
-10	161-58117	.FITTING - HYDRAULIC ACCUM AIR VALVE MOUNT		1
-11	AN6287-1	.VALVE - 3/4-IN. HEXAGON AIR HIGH PRESSURE		1
-12	AN833-4D	.ELBOW -		1
-13	AN804D4	.TEE -		1
-14	AN6289-4	.NUT -		1
-15	AN6291-4	.RING -		1
-16	AN6290-4	.GASKET -		1
-17	191-58812-31	LINE ASSY - AIR-PRESSURE (SEE FIG. 198)		REF
-18	191-58811-7	LINE ASSY - AIR-PRESSURE (SEE FIG. 198)		REF
-19	191-58809-27	LINE ASSY - ACCUMULATOR AIR-PRESSURE (SEE FIG. 196)		REF
-20	191-58809-29	LINE ASSY - ACCUMULATOR AIR-PRESSURE (SEE FIG. 196)		REF

-000-

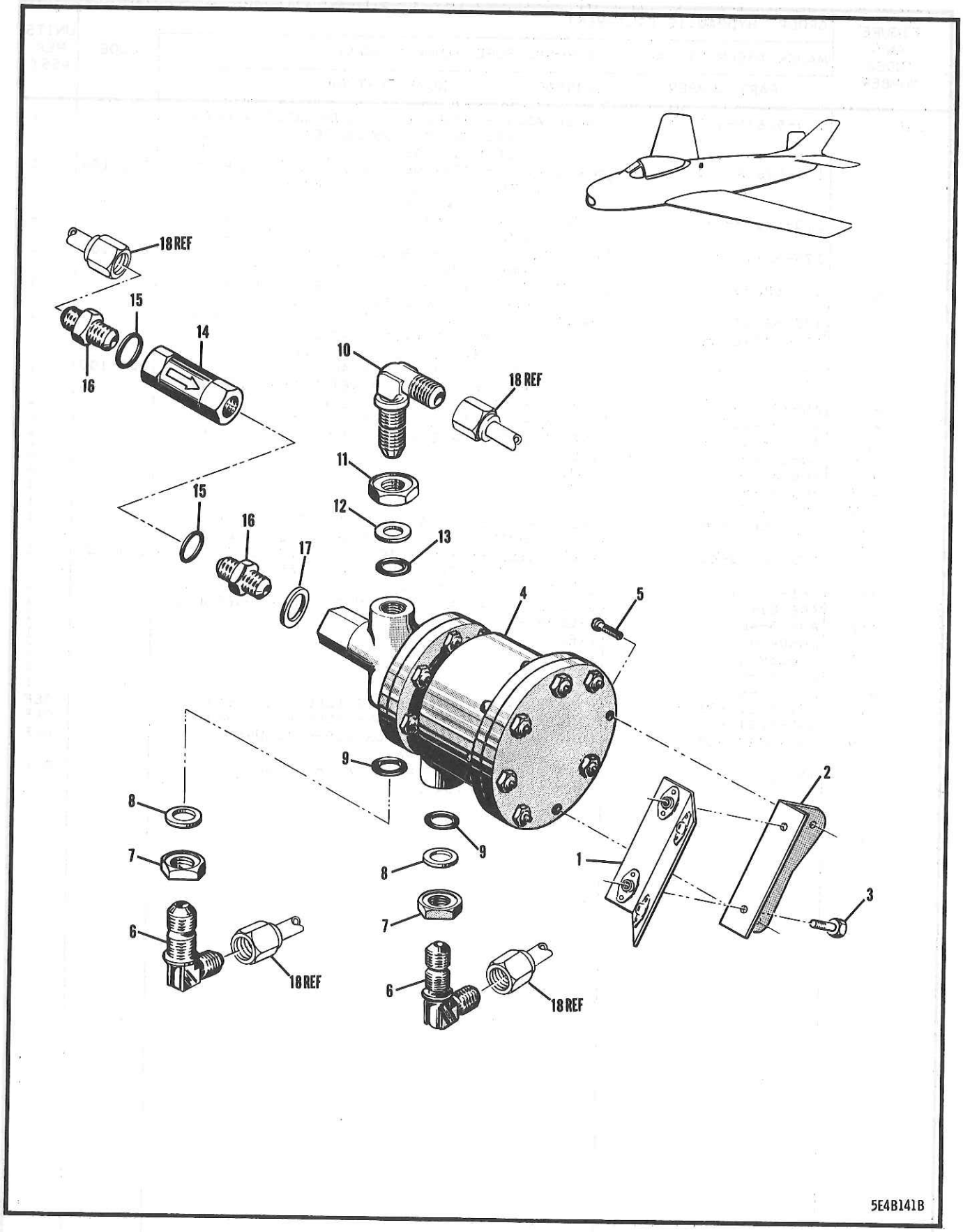

FIGURE 229 UTILITY RESERVOIR REGULATOR

FIGURE AND INDEX NUMBER	GROUP HYDRAULIC EQUIPMENT MAJOR ASSEMBLY UTILITY RESERVOIR REGULATOR PART NUMBER	1234567 NOMENCLATURE	CODE	UNITS PER ASSY
229 -	13A-71403	REGULATOR ASSY - HYDRAULIC UTILITY RSRVR (SEE FIG. 196)		1
- 1	13A-71224	•SUPPORT ASSY - HYDRAULIC REGULATOR (UPPER)		1
- 2	13A-71223	•SUPPORT - HYDRAULIC REGULATOR (UPPER)		1
- 3	AN3-4A	•BOLT -		2
	AN960PD10L	•WASHER -		2
	AN365-1032	•NUT -		2
- 4	312022-1	•REGULATOR - HYD RSRVR AIR-PRESSURE (GLP)	001-100	1
	312022-2	•REGULATOR - HYD RSRVR AIR-PRESSURE (GLP)	101-	1
- 5	AN503-8-12	•SCREW - (REGULATOR TO SUPPORT ATTACHING)		2
	2W1AL-12-24-156	•WASHER - PLAIN (NAA)		2
- 6	AN833-6D	•ELBOW -		2
- 7	AN6289-6	•NUT -		2
- 8	AN6290-6	•GASKET -		2
- 9	AN6291-6	•RING -		2
-10	AN833-4D	•ELBOW -		1
-11	AN6289-4	•NUT -		1
-12	AN6290-4	•GASKET -		1
-13	AN6291-4	•RING -		1
-14	4-2050-77	•CHECK-VALVE - (PAC) (HYDRAULIC)		1
-15	AN6290-6	•GASKET -		2
-16	AN919-6D	•REDUCER -		2
-17	AN6290-4	•GASKET -		1
-18	CROSS REFERENCE	LINE ASSY - (SEE FIG. 196)		REF
		-000-		

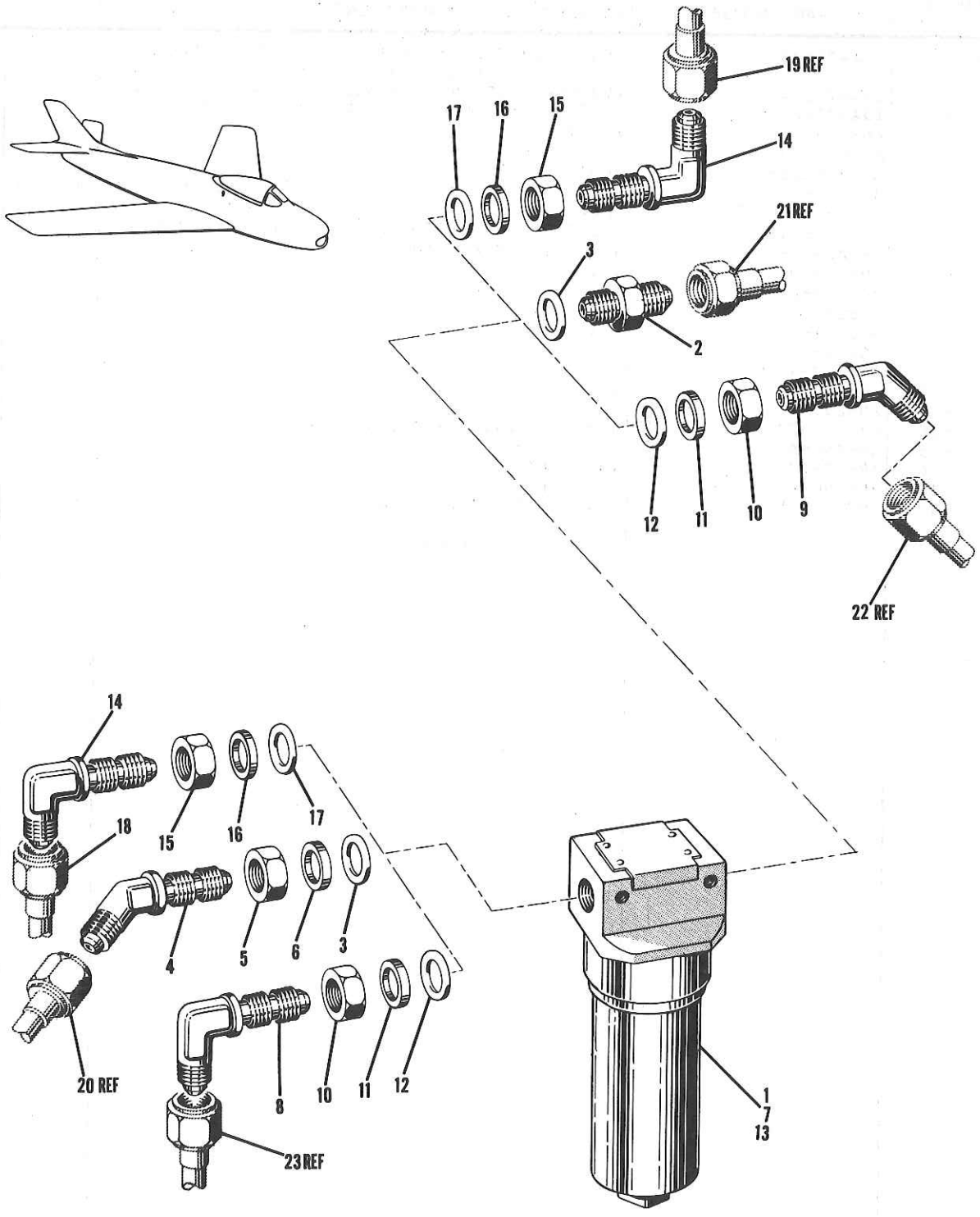

FIGURE 230 SURFACE CONTROLS HYDRAULIC FILTERS

Figure and Index Number	Part	1 2 3 4 5 6 7 Nomenclature	Units per Assy	Usage on Code
	Group HYDRAULIC EQUIPMENT			
	Major Assembly SURFACE CONTROLS HYDRAULIC FILTERS			
230 -	13A-71304	Filter Assy - Hydraulic Alternate Surface CTL 6-Tube Size (See Figure 199)	001-370	1
	13A-71304-800	Filter Assy - Hydraulic Alternate Surface Control 6-Tube Size (As Per EO 05-5E-6B/13)	371-	1
-1	MS28720-6	Filter - 3000-psi Hydraulic Line Type		1
-2	AN815-6D	Union -	001-370	1
	AN815-6	Union - (As Per EO 05-5E-6B/13)	371-	1
-3	AN6290-6	Gasket -		2
-4	AN837-6D	Elbow -	001-370	1
	AN837-6	Elbow - (As Per EO 05-5E-6B/13)	371-	1
-5	AN6289D6	Nut -		1
-6	AN6291-6	Ring -		1
	13A-71307	Filter Assy - Hydraulic Normal Sur Control Return (Complete) (See Figure 198)	001-370	1
	13A-71307-3	Filter Assy - Hydraulic Normal Surface CTL Return (Complete)	371-	1
-7	AN6234-3	Filter Assy - Hydraulic Replaceable Element Line Type (Purolator 30018 - Skinner 28090D)		1
	AN6235-3A	Element Assy (Purolator 6655567 - Skinner 28025D)		1
	AN6230-4	Packing - Bowl "O"-ring (Purolator 30323 - Skinner 28415)		1
	AN6244-4	Ring - Bowl Back Up (Skinner 565965)		1
	32152	Ring - Bowl Back Up (Purolator)		1
-8	AN833-8D	Elbow -		1
-9	AN837-8D	Elbow -		1
-10	AN6289D8	Nut -		2
-11	AN6291-8	Ring -		2
-12	AN6290-8	Gasket -		2
	172-58630	Filter Assy - Hydraulic Emergency Pwr/CTL (Complete) (See Figure 210)		1
-13	AN6234-2	Filter - Hyd Replaceable Element Line Type		1
-14	AN833-6	Elbow -		2
-15	AN6289-6	Nut -		2
-16	AN6291-6	Ring -		2
-17	AN6290-6	Gasket -		2
-18	172-58821-59	Line Assy - Emergency Power Control Return (See Figure 210)		REF
-19	13A-71814-31	Line Assy - Alternate Sur Control Return (See Figure 210)		REF
-20	13A-71811-5	Line Assy - Normal Surface Control Return (See Figure 198)		REF
-21	13A-71831-11	Line Assy - Normal Surface Control Return (See Figure 198)		REF
-22	13A-71812-5	Line Assy - Alternate Surface CTL Pressure (See Figure 199)		REF
-23	13A-71812-7	Line Assy - Alternate Surface CTL Pressure (See Figure 199)		REF

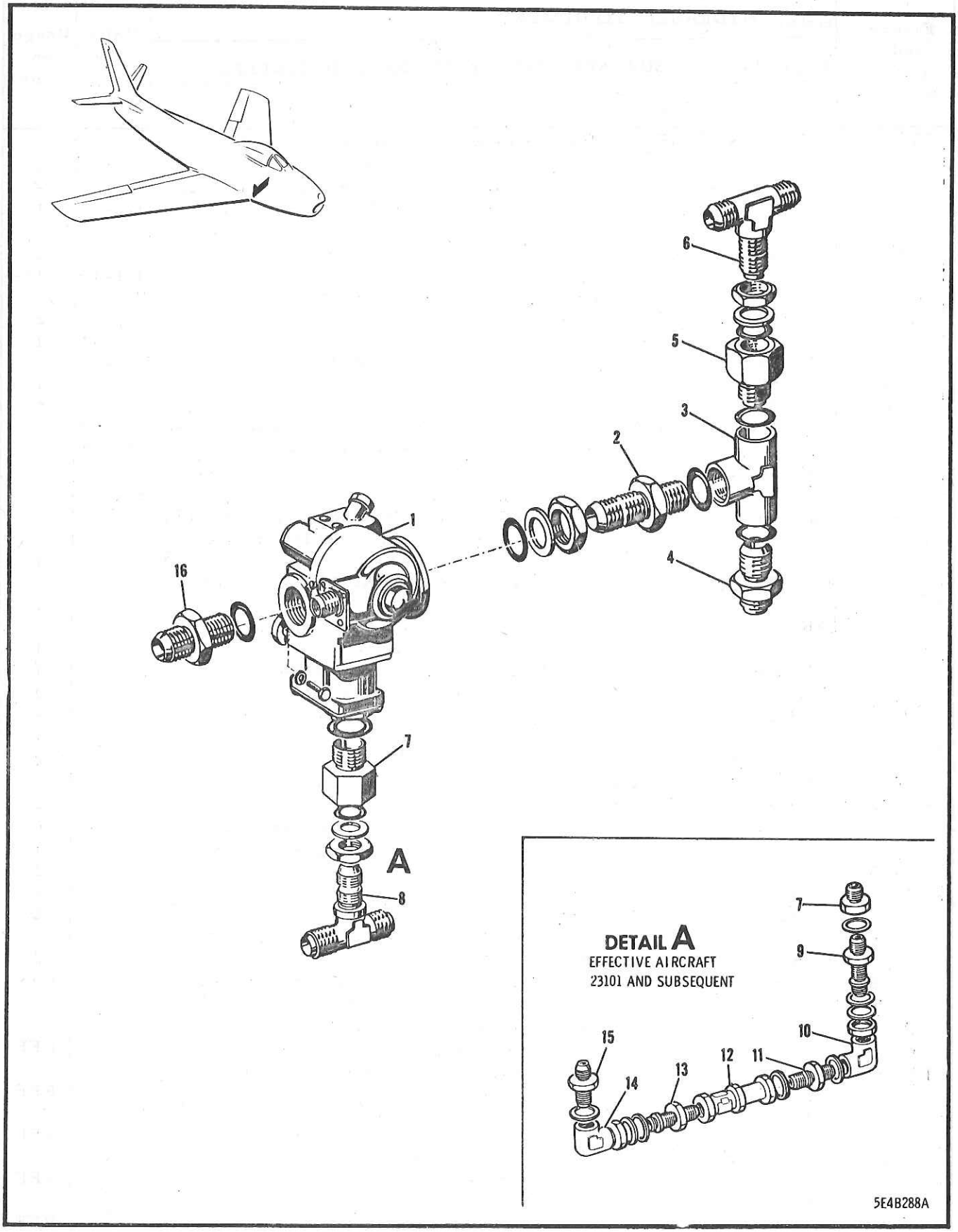

FIGURE 231 SURFACE CONTROLS NORMAL HYDRAULIC BY-PASS VALVE

FIGURE AND INDEX NUMBER	GROUP HYDRAULIC EQUIPMENT MAJOR ASSEMBLY SURFACE CONTROLS NORMAL HYDRAULIC BY-PASS VALVE PART NUMBER	1234567 NOMENCLATURE	CODE	UNITS PER ASSY
231 -	13A-71309	VALVE ASSY - NORMAL SURFACE CONTROL BY-PASS (SEE FIG. 200)	001-100	1
	13A-71309-3	VALVE ASSY - NORMAL SURFACE CONTROL BY-PASS	101-370	1
	13A-71309-803	VALVE ASSY - NORMAL SURFACE CONTROL BY-PASS (AS PER EO 05-5E-6B/13)	371-	1
- 1	13-1010	•VALVE - HYD SOL PILOT OPR 3-WAY 2-POSN SELECTOR (PII)		1
		OR		
	25342-4	•VALVE - SOLENOID PILOT OPR 3-WAY 2-POSN SELECTOR (WTR)		
		OR		
	1371-549065	•VALVE - (PII)	211-	
- 2	AN832-8D	•UNION -		1
	AN6289-8D	•NUT -		1
	AN6291-8	•RING -		1
	AN6290-8	•GASKET -		1
- 3	AN938-8D	•TEE -		1
	AN6290-8	•GASKET -		3
- 4	AN919-12D	•REDUCER -	001-370	1
	AN919-12	•REDUCER -	371-	1
- 5	AN893-12D	•BUSHING -		1
- 6	AN834-6D	•TEE -	001-370	1
	AN834-6	•TEE -	371-	1
	AN6290-6	•GASKET -		1
	AN6291-6	•RING -		1
	AN6289-6	•NUT -		1
- 7	AN893-12D	•BUSHING -		1
	AN6290-8	•GASKET -		1
	AN6290-6	•GASKET -		1
	AN6291-6	•RING -		1
	AN6289-6	•NUT -	001-100	1
- 8	AN834-6D	•TEE -	001-100	1
- 9	AN832-6D	•UNION -	101-	1
	AN6290-6	•GASKET -	101-	1
	AN6289D6	•NUT -	101-	1
-10	AN939-6D	•ELBOW -	101-	1
	AN6290-6	•GASKET -	101-	1
-11	AN919-6D	•REDUCER -	101-	1
	AN6290-4	•GASKET -	101-	1
-12	1V7-8-30	•VALVE ASSY - HYDRAULIC 2-WAY RESTR (NAA) (FOR BREAKDOWN SEE EO 15-71BB-4)	101-	1
	AN6290-4	•GASKET -	101-	1
-13	AN832-4D	•UNION -	101-	1
	AN6290-4	•GASKET -	101-	1
	AN6291-4	•RING -	101-	1
	AN6289D4	•NUT -	101-	1
-14	AN939-4D	•ELBOW -	101-	1
	AN6290-4	•GASKET -	101-	1
-15	AN919-6D	•REDUCER -	101-370	1
	AN919-6	•REDUCER -	371-	1
	AN6290-8	•GASKET -		1
-16	AN815-8D	•UNION -		1

-000-

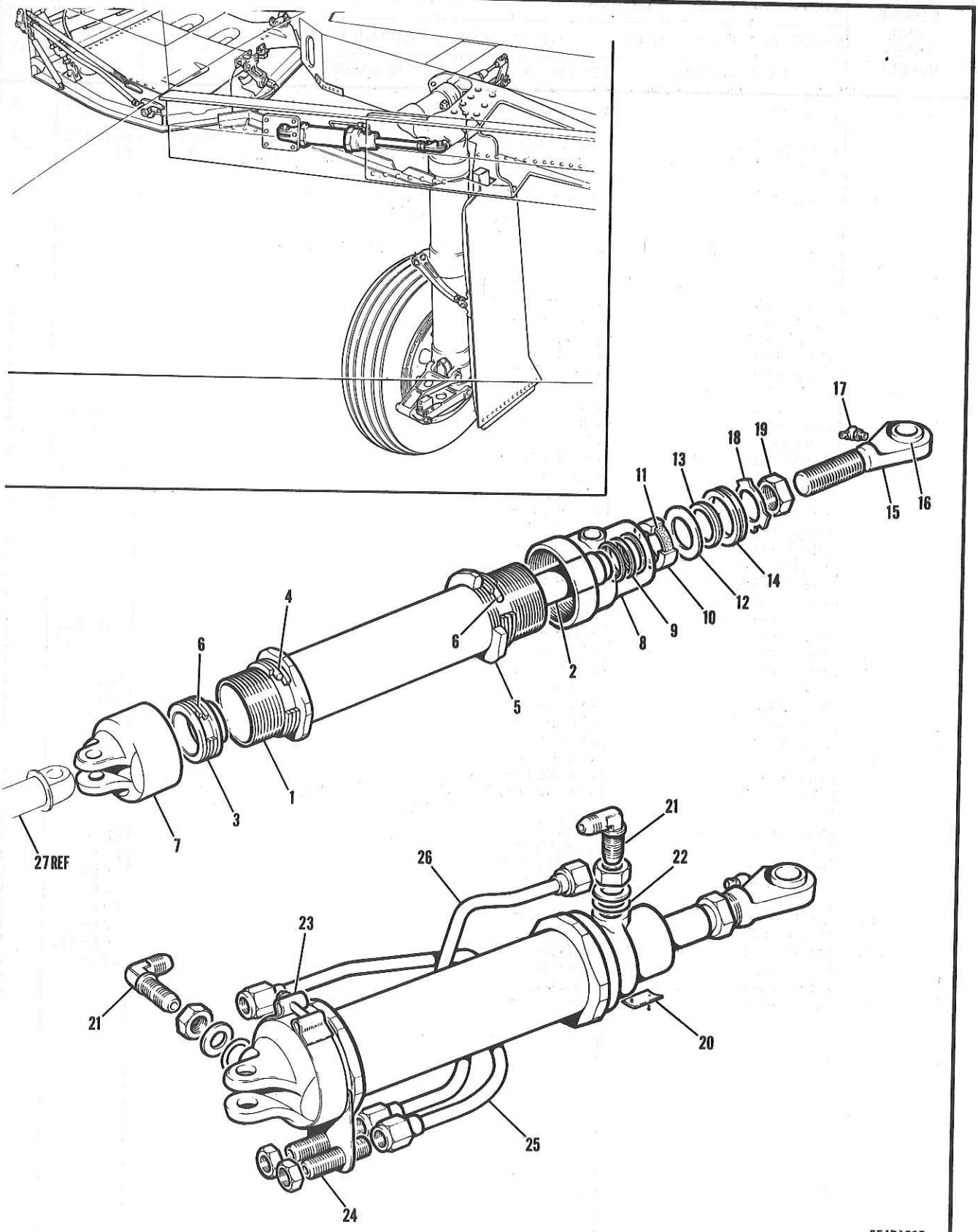

FIGURE 232 MAIN LANDING GEAR OPERATING CYLINDER

FIGURE AND INDEX NUMBER	GROUP HYDRAULIC EQUIPMENT MAJOR ASSEMBLY MAIN LANDING GEAR OPERATING CYLINDER PART NUMBER	1234567 NOMENCLATURE	CODE	UNITS PER ASSY
232 -	151-58627-3	CYLINDER ASSY - M/LDG/GR HYDRAULIC OPR PORT WING (SEE FIG. 201)		1
	151-58627-4	CYLINDER ASSY - M/LDG/GR HYDRAULIC OPR STARBOARD WING (SEE FIG. 201)		1
	151-58027-801	.CYLINDER ASSY - MAIN LANDING GEAR HYDRAULIC OPERATING PORT WING		1
	151-58027-802	.CYLINDER ASSY - MAIN LANDING GEAR HYDRAULIC OPERATING STARBOARD WING		1
- 1	151-58175	..CYLINDER - M/LDG/GR HYDRAULIC OPERATING		1
	151-58178-800	..PISTON ASSY - HYD WING FLAP ACTUATING CYL (MAIN LANDING GEAR)		1
- 2	151-58177-800	...ROD - M/LDG/GR HYDRAULIC OPR CYLINDER		1
- 3	151-58176	...PISTON - M/LDG/GR HYDRAULIC OPR CYLINDER		1
- 4	AN6227B20	..PACKING -		1
	AN6246-20	..RING -		2
- 5	130-58228	..LOCK-NUT - HYDRAULIC ACTUATING CYLINDER		2
- 6	AN6227B27	..PACKING -		2
	AN6246-27	..RING -		4
- 7	151-58154-3	..HEAD - M/LDG/GR HYDRAULIC OPERATING CYL		1
- 8	151-58468-3	..END - M/LDG/GR HYDRAULIC OPERATING CYL		1
- 9	AN6227B12	..PACKING -		1
	AN6246-12	..RING -		2
-10	7R3-12D	..RETAINER - O-RING (NAA)		1
-11	AN6232C2-3/8	..FELT -		1
-12	2W1ALP41-33-64	..WASHER - PLAIN (NAA)		1
-13	AN6231-3	..SCRAPER -		1
-14	7R2-12D	..RETAINER - GLAND (NAA)		1
-15	151-58180	..ROD-END ASSY - MAIN LANDING GEAR HYDRAULIC OPERATING CYLINDER		1
-16	4B20B7-005	...BUSHING - PRESS-FIT FLANGED (NAA)		2
-17	NAS2-201A	..FITTING -		1
-18	2W11A8	..LOCK-WASHER - TAB (NAA)		1
-19	AN316-8R	..NUT -		1
-20	13-71035	..NAME-PLATE - HYDRAULIC (M/LDG/GR OPR CYL)		1
	AN535-00-2	..SCREW - (NAME-PLATE ATTACHING)		2
-21	AN833-4D	.ELBOW -		2
	AN6289-4	.NUT -		2
	AN6291-4	.RING -		2
-22	AN6290-4	.GASKET -		2
-23	151-58166-801	.CLAMP ASSY - MAIN LANDING GEAR HYDRAULIC OPERATING CYLINDER PORT WING		1
	151-58166-802	.CLAMP ASSY - MAIN LANDING GEAR HYDRAULIC OPERATING CYLINDER STARBOARD WING		1
	321-625-2250-S	..CLAMP - T-BOLT (MPC)	001-300	1
	321-63-225-SH	..CLAMP - T-BOLT (MPC)	301-	1
	151-58166-3	..CLIP - M/LDG/GR HYDRAULIC OPERATING CYLINDER CLAMP		1
-24	AN832-4D	.UNION -		2
	AN960-716	.WASHER -		2
	AN924-4D	.NUT -		2
-25	191-58807-71	.LINE ASSY - LANDING GEAR DOWN FLEX. HOSE TO CYLINDER (PORT)		1
	191-58807-73	.LINE ASSY - LANDING GEAR DOWN FLEX. HOSE TO CYLINDER (STBD)		1
-26	191-58807-75	.LINE ASSY - LANDING GEAR UP FLEX. HOSE TO CYLINDER (PORT)		1
	191-58807-77	.LINE ASSY - LANDING GEAR UP FLEX. HOSE TO CYLINDER (STBD)		1
-27	140-33504	PIN ASSY - M/LDG/GR RETRACTING CYLINDER MPI (SEE SECTION 4)		REF

-000-

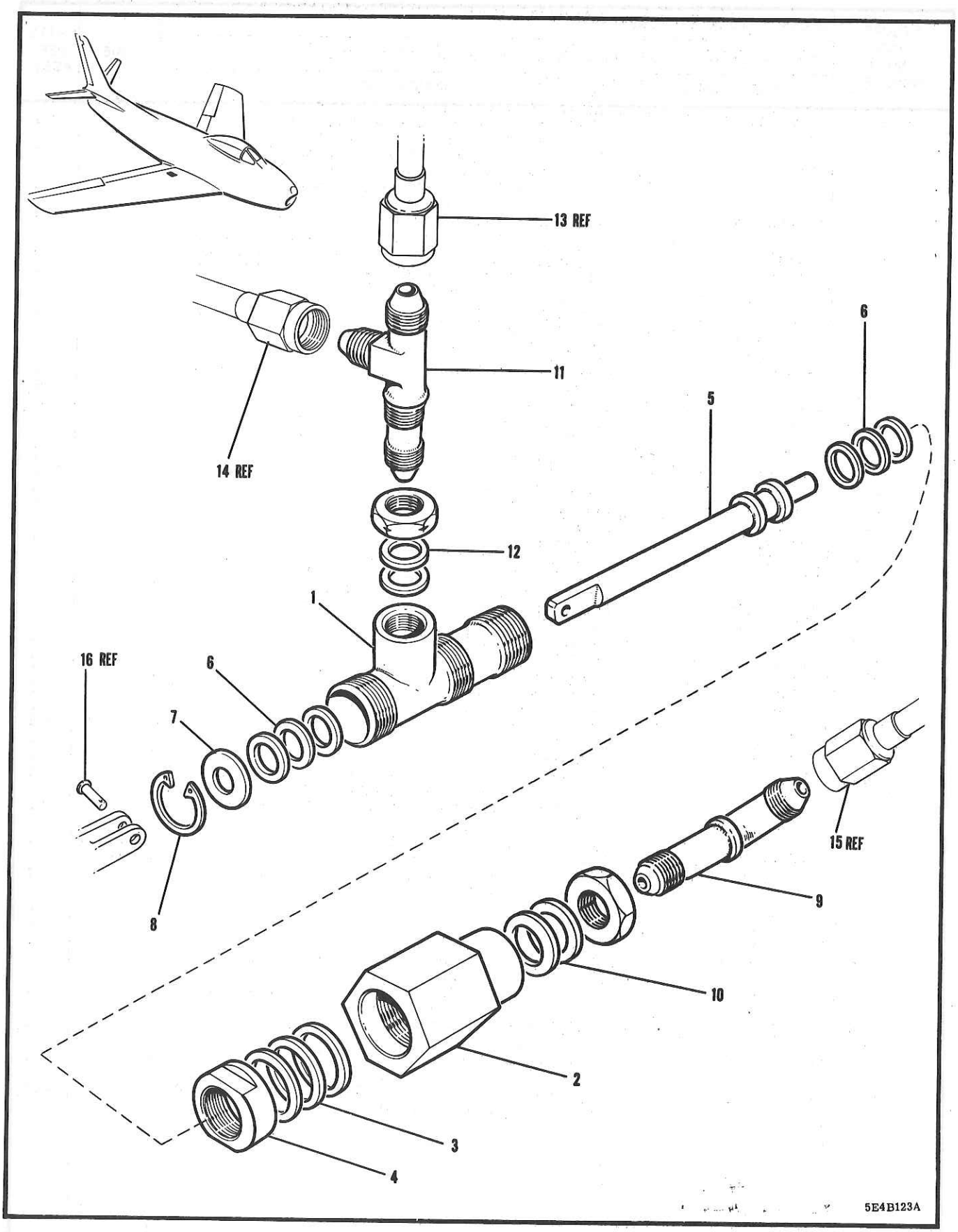

FIGURE 233 MAIN LANDING GEAR UPLOCK RELEASE CYLINDER

FIGURE AND INDEX NUMBER	GROUP HYDRAULIC EQUIPMENT MAJOR ASSEMBLY MAIN LANDING GEAR UPLOCK RELEASE CYLINDER PART NUMBER	1234567 NOMENCLATURE	CODE	UNITS PER ASSY
233 -	151-58629-1	CYLINDER ASSY - M/LDG/GR HYDRAULIC UPLOCK RELEASE PORT (SEE FIG. 201)	001-200	1
	151-58629-801	CYLINDER ASSY - M/LDG/GR HYDRAULIC UPLOCK RELEASE PORT	201-	1
	151-58629-2	CYLINDER ASSY - M/LDG/GR HYDRAULIC UPLOCK RELEASE STARBOARD (SEE FIG. 201)	001-200	1
	151-58629-802	CYLINDER ASSY - M/LDG/GR HYDRAULIC UPLOCK RELEASE STARBOARD	201-	1
	151-58029	•CYLINDER ASSY - MAIN LANDING GEAR HYDRAULIC UPLOCK RELEASE		1
- 1	151-58392-3	••BODY - M/LDG/GR HYDRAULIC UPLOCK REL CYL		1
- 2	151-58246	••HEAD - M/LDG/GR HYDRAULIC UPLOCK REL CYL		1
- 3	AN6227B15	••PACKING -		1
	AN6246-15	••RING -		2
- 4	117-58107	••LOCK-NUT - LDG/GR HYDRAULIC OPERATING CYLINDER (M/LDG/GR)		1
- 5	161-58259	••PISTON - M/LDG/GR HYD UPLOCK REL CYLINDER		1
- 6	AN6227B7	••PACKING -		2
	AN6246-7	••RING -		4
- 7	140-58173	••RETAINER - M/LDG/GR HYD UPLOCK REL CYL		1
- 8	NAS50-87	••RING -		1
	13-71035	••NAME-PLATE - HYDRAULIC (RELEASE CYLINDER)		1
	AN535-00-2	••SCREW - (NAME-PLATE ATTACHING)		2
- 9	AN837-4	•ELBOW -	001-200	1
	AN837-4D	•ELBOW -	201-	1
	AN6290-4	•GASKET -		1
-10	AN6291-4	•RING -		1
	AN6289D4	•NUT -		1
-11	AN804-4	•TEE -		1
	AN6290-4	•GASKET -		1
-12	AN6291-4	•RING -		1
	AN6289D4	•NUT -		1
-13	151-58809-55	LINE ASSY - LANDING GEAR DOWN(SEE FIG. 201)		REF
-14	172-58802-955	LINE ASSY - LANDING GEAR DOWN(SEE FIG. 201)		REF
-15	151-58831-41	LINE ASSY - LANDING GEAR UP (SEE FIG. 201)		REF
-16	151-33516	PIN - LANDING GEAR UPLOCK STRUT LATCH ACTUATOR LINK ATT (SEE FIG. 201)		REF

-000-

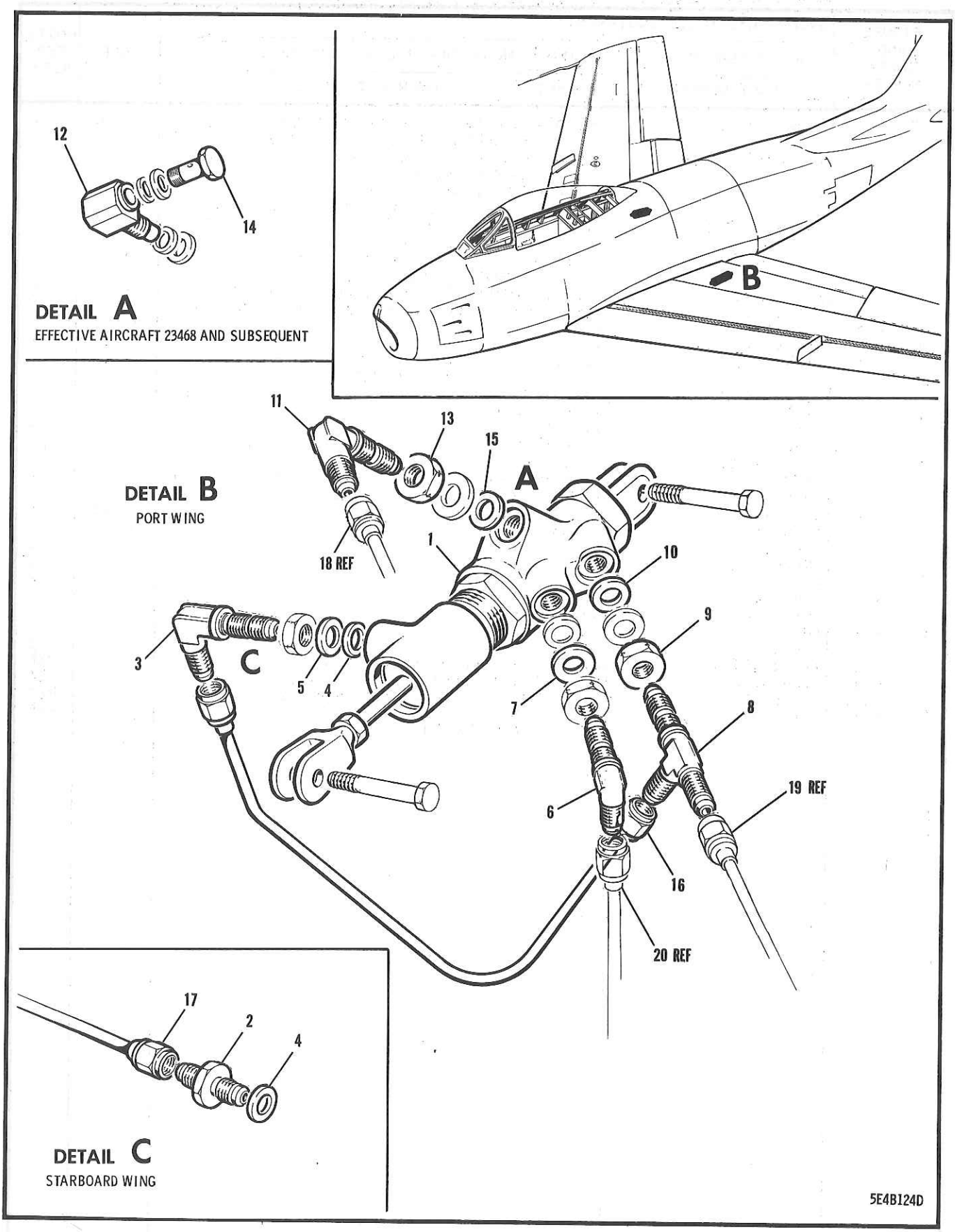

FIGURE 234 MAIN LANDING GEAR DOWNLOCK CYLINDER

FIGURE AND INDEX NUMBER	GROUP HYDRAULIC EQUIPMENT MAJOR ASSEMBLY MAIN LANDING GEAR DOWNLOCK CYLINDER PART NUMBER	1234567 NOMENCLATURE	CODE	UNITS PER ASSY
234 -	151-58628-5	CYLINDER ASSY - HYDRAULIC M/LDG/GR DOWNLOCK PORT WING (SEE FIG. 201)		1
	151-58628-8	CYLINDER ASSY - HYDRAULIC M/LDG/GR DOWNLOCK STARBOARD WING (SEE FIG. 201)	001-467	1
	151-58628-970	CYLINDER ASSY - HYDRAULIC M/LDG/GR DOWNLOCK STARBOARD WING	468-530	1
	151-58628-980	CYLINDER ASSY - HYDRAULIC M/LDG/GR DOWNLOCK STARBOARD WING	531-	1
- 1	151-58028-1	•CYLINDER ASSY - HYD M/LDG/GR DOWNLOCK PORT WING (FOR BRKDN SEE EO 15-71BD-2)		1
	151-58028-2	•CYLINDER ASSY - HYD M/LDG/GR DOWNLOCK STBD WING (FOR BRKDN SEE EO 15-71BD-2)		1
- 2	AN815-4D	•UNION - (STARBOARD WING)		1
- 3	AN833-4D	•ELBOW - (PORT WING)		1
- 4	AN6290-4	•GASKET -		1
- 5	AN6291-4	•RING - (PORT WING)		1
	AN6289D4	•NUT - (PORT WING)		1
- 6	AN837-4	•ELBOW -		1
- 7	AN6290-4	•GASKET -		1
	AN6291-4	•RING -		1
	AN6289-4	•NUT -		1
- 8	AN804-4	•TEE -		1
- 9	AN6289-4	•NUT -		1
	AN6291-4	•RING -		1
-10	AN6290-4	•GASKET -		1
-11	AN833-4	•ELBOW -	001-467	1
-12	151-58524	•ELBOW - HYDRAULIC UNIVERSAL 90-DEG	468-530	1
	151-58524-950	•ELBOW - HYDRAULIC UNIVERSAL 90-DEG	531-	1
-13	AN6289-4	•NUT -	001-467	1
-14	151-58525	•BOLT - HYDRAULIC UNIVERSAL FITTING	468-530	1
	151-58525-950	•BOLT - HYDRAULIC UNIVERSAL FITTING	531-	1
	AN6291-4	•RING -	001-467	1
	AN6227B6	•PACKING -	468-	1
-15	AN6290-4	•GASKET -	001-467	1
	AN6227B7	•PACKING -	468-	1
-16	191-58807-79	•LINE ASSY - LANDING GEAR UP TEE ON LOCK TO UNION DWNLK CYLINDER (PORT)		1
-17	191-58807-81	•LINE ASSY - LANDING GEAR UP DWNLK TEE TO UNION DWNLK CYLINDER (STARBOARD)		1
-18	170-58801-57	LINE ASSY - LANDING GEAR UP (SEE FIG. 201)		REF
-19	151-58831-31	LINE ASSY - LANDING GEAR UP (SEE FIG. 201)		REF
-20	170-58801-59	LINE ASSY - LANDING GEAR DOWN (SEE FIG.201)		REF

-000-

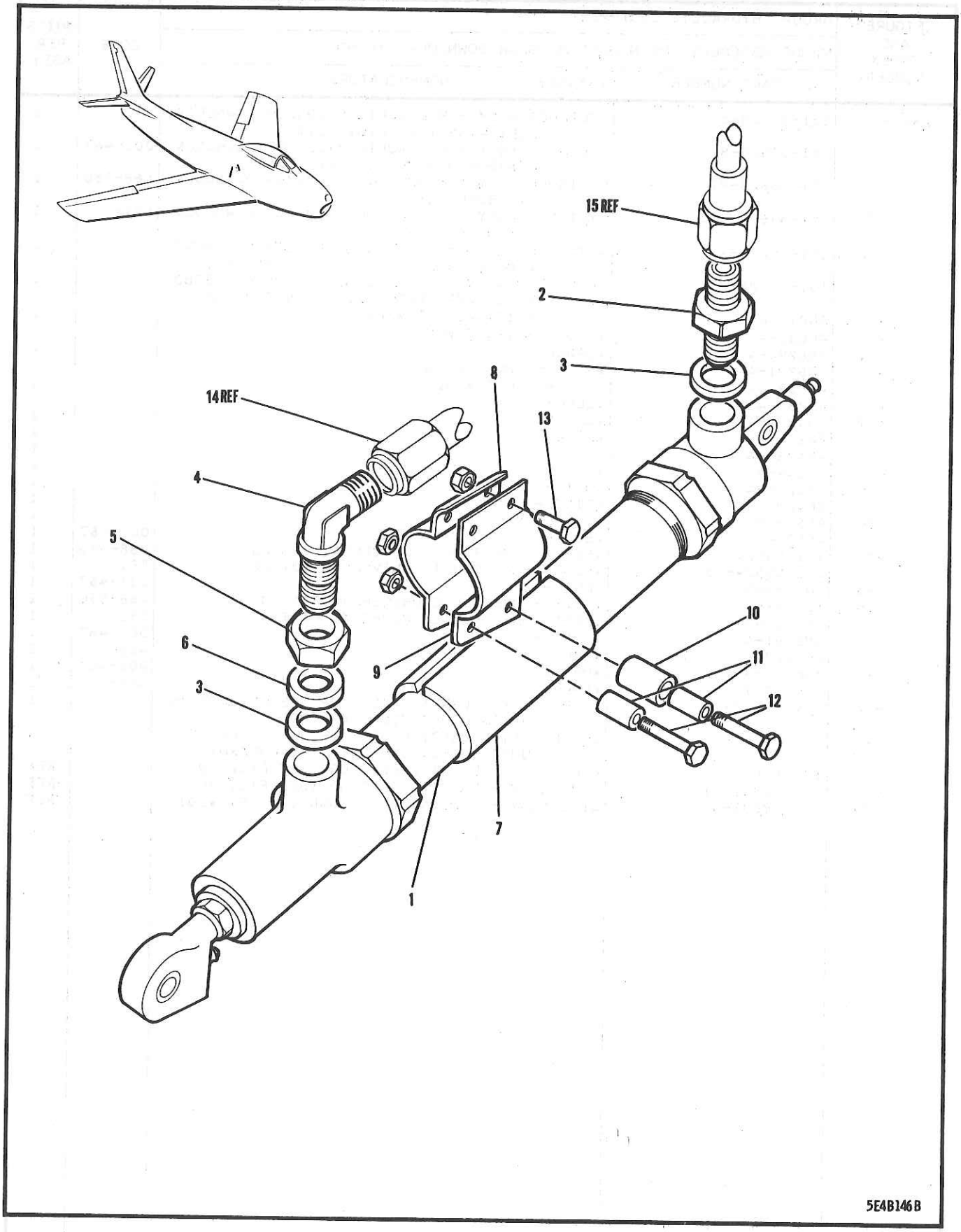

FIGURE 235 MAIN LANDING GEAR FAIRING DOOR CYLINDER

FIGURE AND INDEX NUMBER	GROUP HYDRAULIC EQUIPMENT MAJOR ASSEMBLY MAIN LANDING GEAR FAIRING DOOR CYLINDER PART NUMBER	1234567 NOMENCLATURE	CODE	UNITS PER ASSY
235 -	151-58641-7	CYLINDER ASSY - M/LDG/GR FAIRING DOOR HYD (COMPL) (SEE FIG. 195 & 197)		2
- 1	140-58041-10	•CYLINDER ASSY - M/LDG/GR FAIR. DOOR OPR (FOR BREAKDOWN SEE EO 15-71BD-2)		1
- 2	AN815-4D	•UNION -		1
- 3	AN6290-4	•GASKET -		2
- 4	AN833-4D	•ELBOW -		1
- 5	AN6289D4	•NUT -		1
- 6	AN6291-4	•RING -		1
- 7	151-58641-3	•PACKING - M/LDG/GR FAIRING DOOR HYDRAULIC CYLINDER SHEET		1
- 8	140-33554-3	•CLAMP - WHEEL DOOR LOCK TORQUE SHAFT BELL-CRANK SAFETY		1
- 9	140-33554-5	•CLAMP - WHEEL DOOR LOCK TORQUE SHAFT BELL-CRANK SAFETY		1
-10	140-33555	•ROLLER - WHEEL DOOR LOCK TORQUE SHAFT BELL-CRANK SAFETY		1
-11	4S3-10-23	•SPACER - BOLT (NAA)		2
-12	AN3-10A	•BOLT - (CLAMP TO CYLINDER ATTACHING)	001-100	2
	AN3-11A	•BOLT - (CLAMP TO CYLINDER ATTACHING)	101-	2
	AN364-1032	•NUT -		2
-13	AN3-5A	•BOLT - (CLAMP TO CYLINDER ATTACHING)		2
	AN365-1032	•NUT -		2
-14	3H3-4-0140	HOSE ASSY - (FAIRING DOOR CLOSE) (SEE FIG. 195 & 197)		REF
-15	3H3-4-0120	HOSE ASSY - (FAIRING DOOR OPEN) (SEE FIG. 195 & 197)		REF

-000-

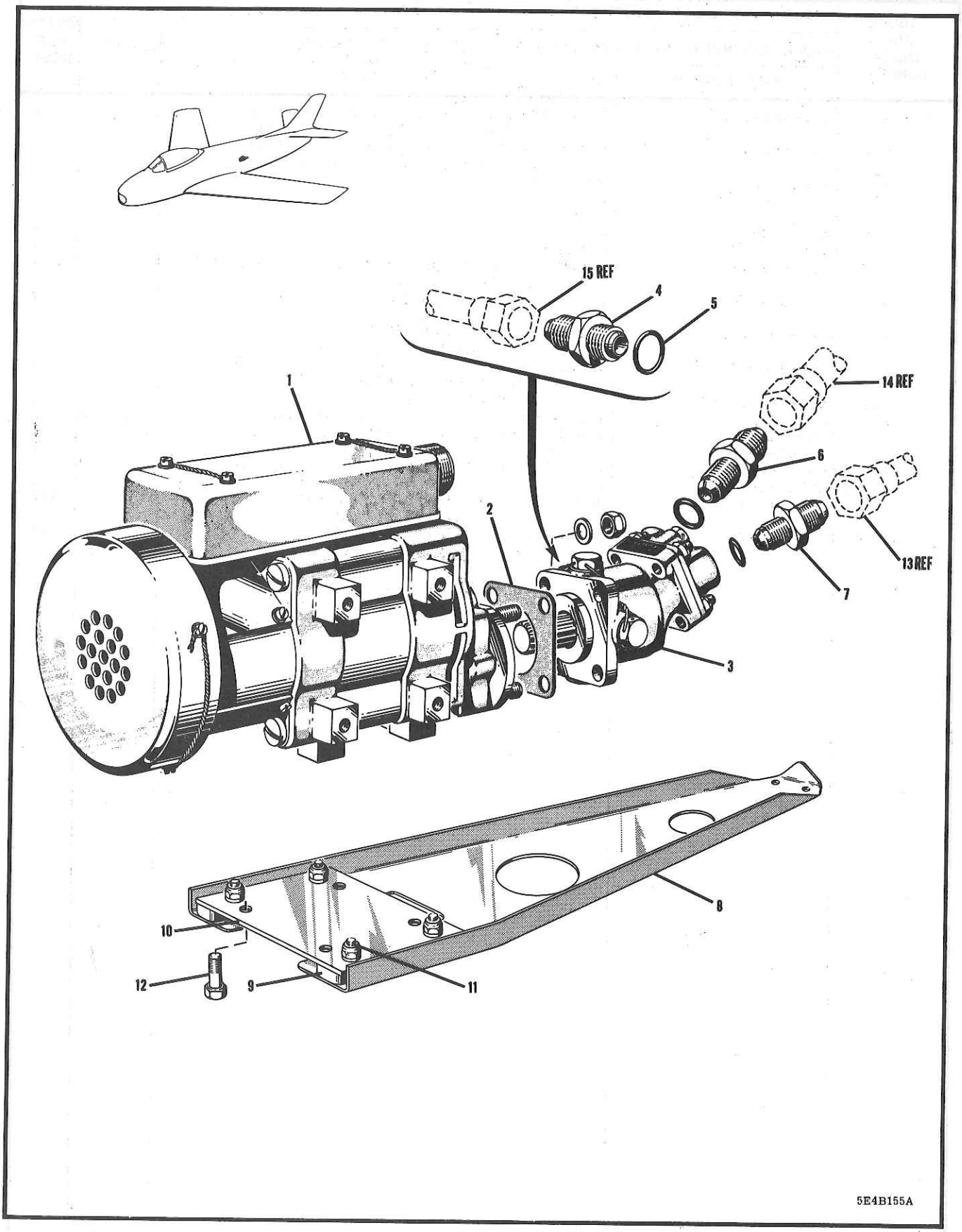

FIGURE 236 ALTERNATE POWER CONTROL PUMP

FIGURE AND INDEX NUMBER	GROUP HYDRAULIC EQUIPMENT MAJOR ASSEMBLY ALTERNATE POWER CONTROL PUMP PART NUMBER	1234567 NOMENCLATURE	CODE	UNITS PER ASSY
236 -	172-58601-805	PUMP ASSY - HYDRAULIC EMERGENCY PWR/CTL (SEE FIG. 209)(AS PER EO 05-5E-6A/84)	A35	1
	172-58601-807	PUMP ASSY - HYDRAULIC EMERGENCY PWR/CTL	597-616	1
	165-58050-803	.PUMP ASSY - HYDRAULIC EMY MOTOR-DRIVEN	A35	1
	165-58050-3	.PUMP ASSY - HYDRAULIC EMY MOTOR-DRIVEN	597-616	1
- 1	D1000	..MOTOR - (HCO) (HYDRAULIC PUMP) (FOR BREAKDOWN SEE EO 40-25PA-4) OR		1
	D1940	..MOTOR - (HCO)		1
- 2	AN4045-1	..GASKET -		1
- 3	PF24-3906-20BCE-4	..PUMP - PISTON TYPE CONSTANT DISPLACEMENT HYDRAULIC (VII)	A35	1
	PF24-3906-20BCE-2	..PUMP - PISTON TYPE CONSTANT DISPLACEMENT HYDRAULIC (VII)	597-616	1
	AN960D416	..WASHER -		4
	AN365-428	..NUT -		4
- 4	AN815-3	.UNION -		1
- 5	AN6290-3	.GASKET -		1
- 6	AN919-11	.REDUCER -		1
- 7	AN919-7	.REDUCER -		1
	AN6290-5	.GASKET -		2
	172-58134	.PAN ASSY - HYDRAULIC EMERGENCY PWR/CTL PUMP REMOVABLE		1
- 8	172-58134-3	..PAN - HYDRAULIC EMERGENCY PWR/CTL PUMP		1
- 9	172-58134-5	..SPACER - PUMP PAN		2
-10	172-58134-7	..PLATE - PUMP PAN		1
-11	AN509-10R14	..SCREW -		4
	AN960D10L	..WASHER -		8
	AN365-1032	..NUT -		4
-12	AN3H4A	.BOLT - (PUMP TO PAN ATTACHING)		4
-13	13A-71814-27	LINE ASSY - ALTERNATE SURFACE CTL PRESSURE (SEE FIG. 209)		REF
-14	13A-71814-23	LINE ASSY - ALTERNATE SURFACE CTL SUCTION (SEE FIG. 209)		REF
-15	13A-71814-33	LINE ASSY - ALTERNATE SURFACE CTL PRESSURE (SEE FIG. 209)		REF

-000-

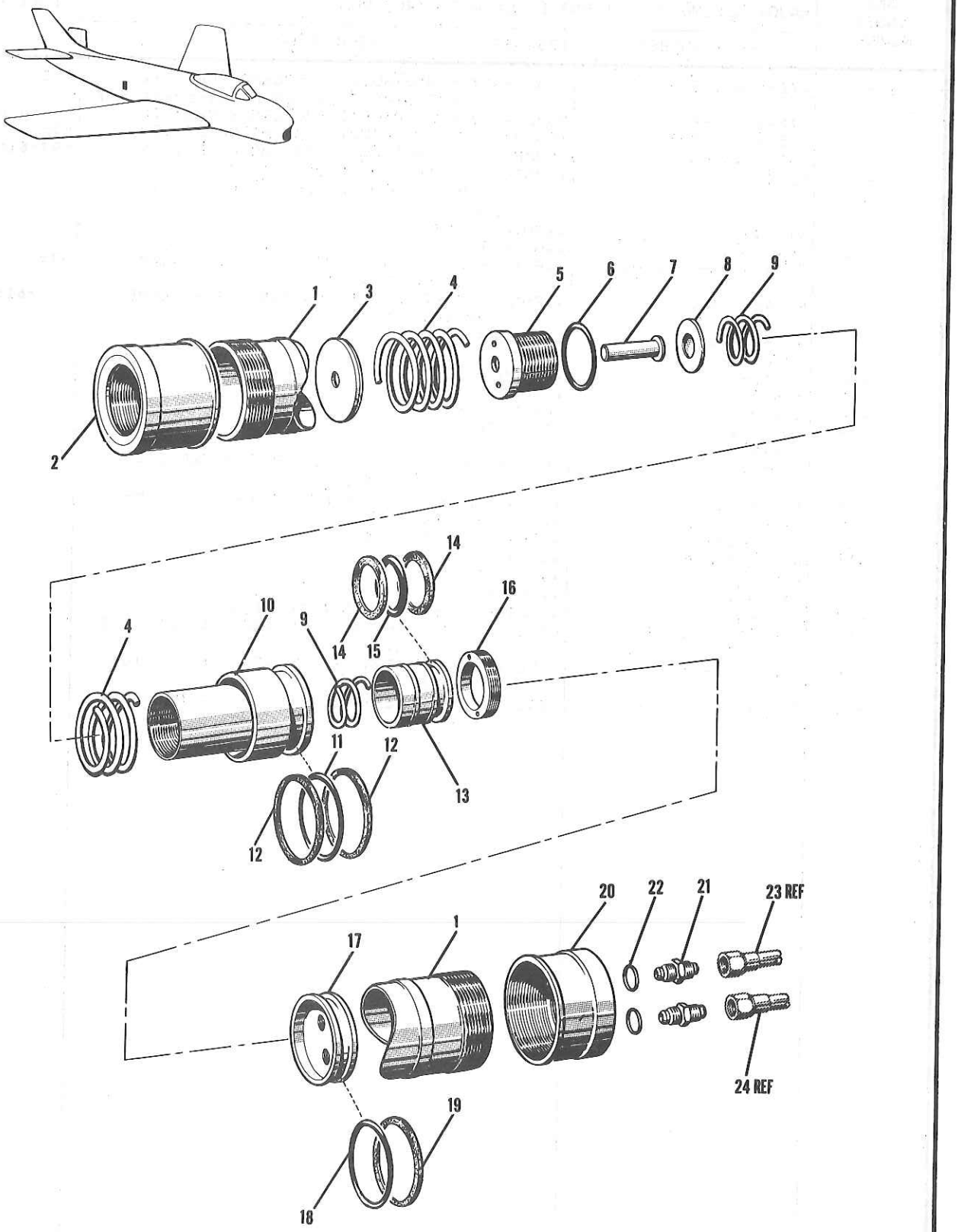

FIGURE 237 POWER CONTROL COMPENSATOR

FIGURE AND INDEX NUMBER	GROUP	HYDRAULIC EQUIPMENT	CODE	UNITS PER ASSY
	MAJOR ASSEMBLY	POWER CONTROL COMPENSATOR		
	PART NUMBER	1234567 NOMENCLATURE		
237 -	172-58610	COMPENSATOR ASSY - HYD PWR/CTL (COMPLETE) (SEE FIG. 208 & 210)		2
	170-58010-3	.CYLINDER ASSY - COMPENSATOR HYDRAULIC POWER CONTROL (COMPLETE)		1
- 1	170-58269	..CYLINDER - HYDRAULIC POWER CONTROL COMPTR		1
- 2	170-58274-5	..CAP - HYDRAULIC POWER CONTROL COMPENSATOR		1
- 3	170-58273	..PLATE - HYDRAULIC PWR/CTL COMPTR SPRING		1
- 4	170-58278	..SPRING - COMPRESSION		1
- 5	170-58270	..RETAINER - HYDRAULIC PWR/CTL COMPTR SPG		1
- 6	AN6230B9	..GASKET -		1
- 7	170-58272-900	..PIN - HYDRAULIC POWER CONTROL COMPTR IND		1
- 8	170-58271	..PLATE - HYDRAULIC PWR/CTL COMPTR IND		1
- 9	170-58279	..SPRING - COMPRESSION		1
-10	170-58275	..PISTON - HYDRAULIC FLT/CTL COMPTR MAIN		1
-11	AN6227B48	..PACKING -		1
-12	5R12-48	..RING - HYDRAULIC SPIRAL BACK-UP (NAA)		2
-13	170-58277	..PISTON - HYDRAULIC PWR/CTL COMPTR SURGE		1
-14	5R12-35	..RING - HYDRAULIC SPIRAL BACK-UP (NAA)		2
-15	AN6227B35	..PACKING -		1
-16	170-58280	..RETAINER - HYDRAULIC POWER CONTROL COMPENSATOR SURGE PISTON		1
-17	170-58276	..RETAINER - HYDRAULIC POWER CONTROL COMPENSATOR MAIN PISTON		1
-18	AN6246-48	..RING -		1
-19	AN6227B48	..PACKING -		1
-20	170-58274-3	..CAP - HYDRAULIC POWER CONTROL COMPENSATOR		1
	13-71035	..NAME-PLATE - HYDRAULIC		1
	AN535-00-2	..SCREW - (NAME-PLATE ATTACHING)		2
-21	AN815-6	.UNION -		2
-22	AN6290-6	.GASKET -		2
-23	172-58822-31	LINE ASSY - NORMAL POWER CONTROL RETURN (SEE FIG. 208)		REF
-24	172-58821-71	LINE ASSY - NORMAL POWER CONTROL STAB. RET (SEE FIG. 208)		REF

-000-

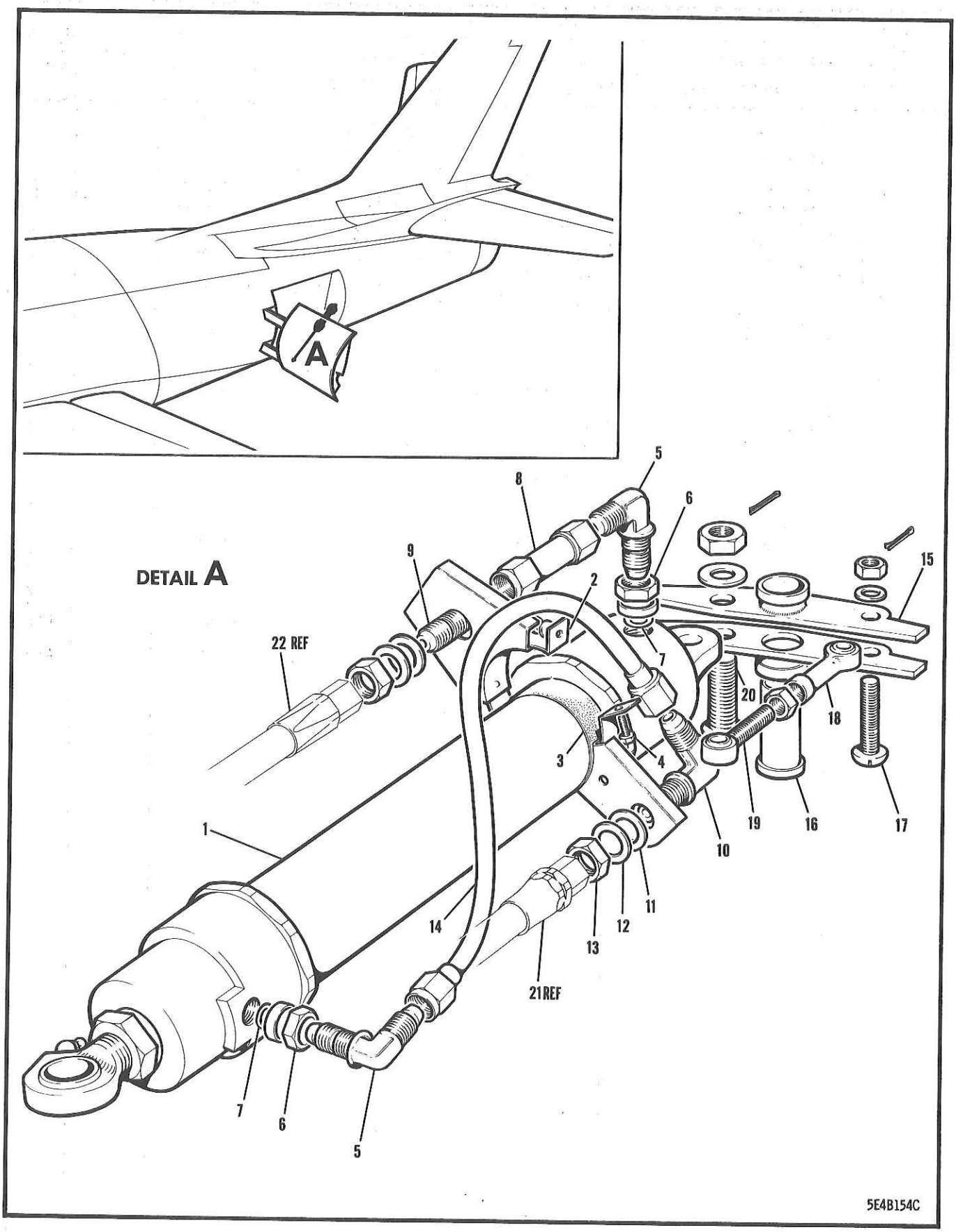

FIGURE 238 SPEEDBRAKE OPERATING CYLINDER

FIGURE AND INDEX NUMBER	GROUP: HYDRAULIC EQUIPMENT MAJOR ASSEMBLY: SPEEDBRAKE OPERATING CYLINDER PART NUMBER	1234567 NOMENCLATURE	CODE	UNITS PER ASSY
238 -	151-58644-1	CYLINDER ASSY - HYDRAULIC SPEEDBRAKE OPR COMPLETE PORT (SEE FIG. 207)	001-100	1
	151-58644-11	CYLINDER ASSY - HYDRAULIC SPEEDBRAKE OPR COMPLETE PORT	101-	1
	151-58644-9	CYLINDER ASSY - HYDRAULIC SPEEDBRAKE OPR COMPLETE STARBOARD (SEE FIG. 207)	001-100	1
	151-58644-12	CYLINDER ASSY - HYDRAULIC SPEEDBRAKE OPR COMPLETE STARBOARD	101-	1
- 1	151-58044-1	•CYLINDER ASSY - HYDRAULIC SPEEDBRAKE PORT (FOR BREAKDOWN SEE EO 15-71BD-4)		1
	151-58044-2	•CYLINDER ASSY - HYDRAULIC SPEEDBRAKE STBD (FOR BREAKDOWN SEE EO 15-71BD-4)		1
- 2	172-58182-1	•CLAMP ASSY - HYD SPEEDBRAKE CYL LINE PORT	101-	1
	172-58182-2	•CLAMP ASSY - HYD SPEEDBRAKE CYL LINE STBD	101-	1
- 3	151-58644-5	•PACKING - HYDRAULIC SPEEDBRAKE OPR CYL SYNTHETIC STRIP		1
- 4	AN4-5A	•BOLT - (CLAMP TO CYLINDER ATTACHING)		1
	AN960D416	•WASHER -		1
	AN365-428	•NUT -		1
- 5	AN833-6	•ELBOW -		2
- 6	AN6289-6	•NUT -		2
	AN6291-6	•RING -		2
- 7	AN6290-6	•GASKET -		2
- 8		•DELETED -		
- 9		•DELETED -		
-10	AN833-6	•ELBOW -		1
-11	AN960D916	•WASHER -		2
-12	AN960D916L	•WASHER -		2
-13	AN924-6D	•NUT -		2
-14	151-58828-15	•LINE ASSY - SPEEDBRAKE CLOSE (HOSE TO CYLINDER HEAD PORT)	001-100	1
	172-58823-39	•LINE ASSY - SPEEDBRAKE CLOSE (HOSE TO CYLINDER HEAD PORT)	101-	1
	172-58822-53	•LINE ASSY - SPEEDBRAKE CLOSE (HOSE TO CYLINDER HEAD STARBOARD)	001-100	1
	172-58823-45	•LINE ASSY - SPEEDBRAKE CLOSE (HOSE TO CYLINDER HEAD STBD)	101-	1
-15	140-39038-1	•BELL-CRANK ASSY - SPEEDBRAKE FUSELAGE ACTUATOR PORT MPI		1
	140-39038-2	•BELL-CRANK ASSY - SPEEDBRAKE FUSELAGE ACTUATOR STBD MPI		1
-16	4B16-RF10-27	••BEARING - SINTERED OIL IMPREGNATED (NAA)		2
-17	AN25-18	•BOLT - (ROD TO BELL-CRANK ATTACHING)		1
	AN960-516L	•WASHER -		4
	AN320-5	•NUT -		1
	AN380-2-3	•COTTER-PIN -		1
-18	HM-5	•ROD-END - UNIBAL SPHERICAL BEARING (HEC) OR		1
	HE-5	•ROD-END - SPHERICAL BEARING (KAH)		
-19	HF-5	•ROD-END - UNIBAL SPHERICAL BEARING (HEC)		1
	AN316-5R	•NUT -		1
-20	151-58208	•BOLT - HYDRAULIC SPEEDBRAKE CYLINDER MPI		1
	AN960-916L	•WASHER -		1
	AN320-9	•NUT -		1
	AN380-4-5	•COTTER-PIN -		1
-21	13A-71062-900	HOSE ASSY - SPEEDBRAKE CLOSE (SEE FIG. 207)		REF
-22	13A-71062-901	HOSE ASSY - SPEEDBRAKE OPEN (SEE FIG. 207)		REF
		-000-		

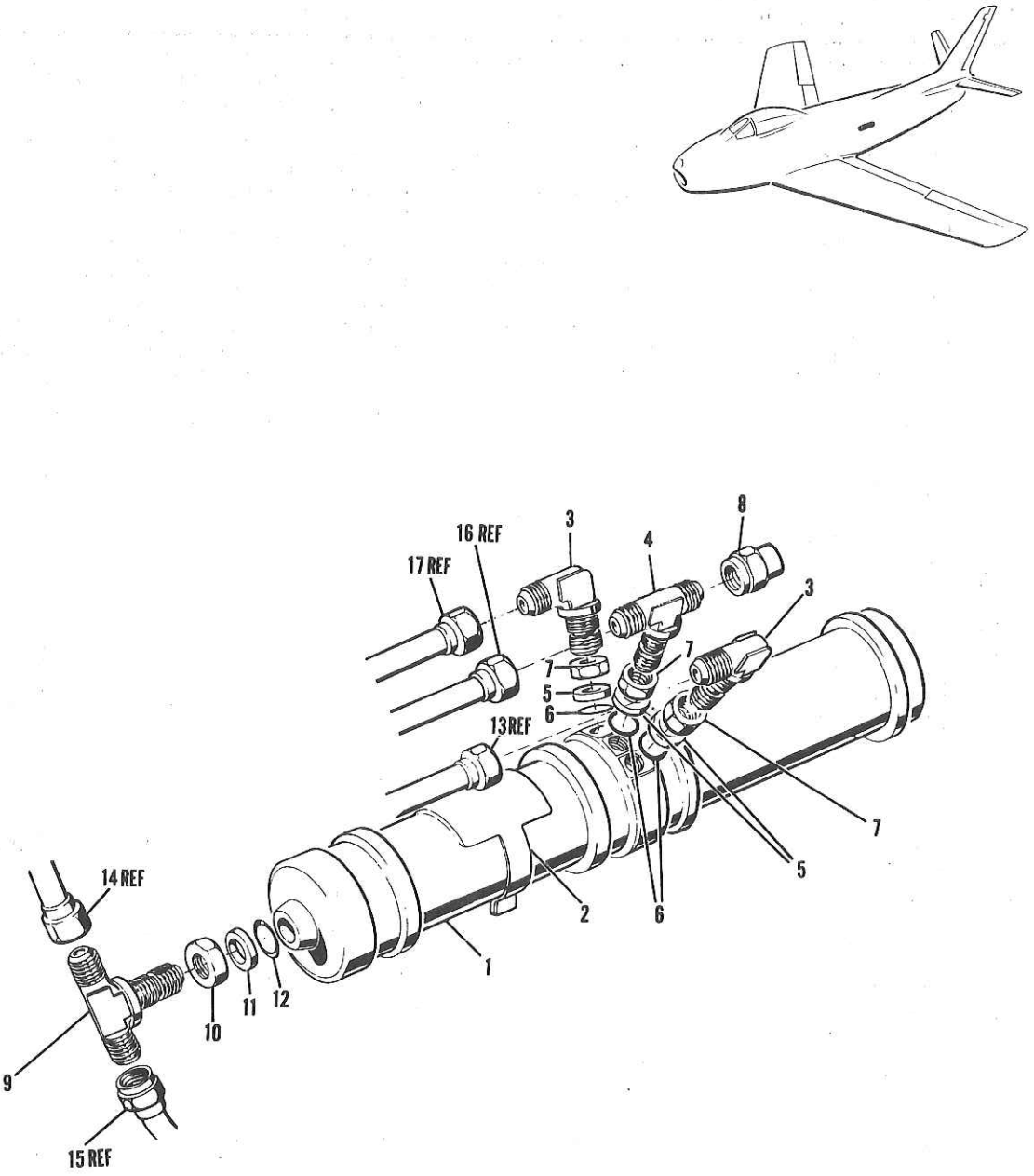

FIGURE 239 ALTERNATE POWER STARBOARD ACCUMULATOR

FIGURE AND INDEX NUMBER	GROUP HYDRAULIC EQUIPMENT MAJOR ASSEMBLY ALTERNATE POWER STARBOARD ACCUMULATOR PART NUMBER	1234567 NOMENCLATURE	CODE	UNITS PER ASSY
239 -	172-58627-15	ACCUMULATOR ASSY - HYDRAULIC ALTERNATE SUR CTL SELF-DISPLACING (LOWER) (STARBOARD SIDE) (SEE FIG. 211)		1
- 1	177-58047-800	•ACCUMULATOR ASSY - HYDRAULIC 60-CU/IN SELF-DISPLACING (SEE FIG. 225)		REF
- 2	170-58259-5	•NAME-PLATE - HYDRAULIC ACCUMULATOR		1
	AN520-10R10	•SCREW - (NAME-PLATE ATTACHING)		1
	AN960D10L	•WASHER -		1
	AN365-1032	•NUT -		1
- 3	AN833-6	•ELBOW -		2
- 4	AN834-6	•TEE -		1
- 5	AN6291-6	•RING -		3
- 6	AN6290-6	•GASKET -		3
- 7	AN6289-6	•NUT -		3
- 8	AN929-6	•CAP -		1
- 9	AN834-4	•TEE -		1
-10	AN6289-4	•NUT -		1
-11	AN6291-4	•RING -		1
-12	AN6290-4	•GASKET -		1
-13	172-58821-49	LINE ASSY - EMERGENCY POWER CONTROL RETURN (SEE FIG. 211)		REF
-14	172-58823-33	LINE ASSY - ALTERNATE SUR CTL AIR-PRESSURE (SEE FIG. 211)		REF
-15	172-58823-31	LINE ASSY - ALTERNATE SUR CTL AIR-PRESSURE (SEE FIG. 211)		REF
-16	13A-71825-3	LINE ASSY - ALTERNATE SURFACE CTL PRESSURE (SEE FIG. 211)		REF
-17	13A-71825-5	LINE ASSY - ALTERNATE SURFACE CTL PRESSURE (SEE FIG. 211)		REF

-000-

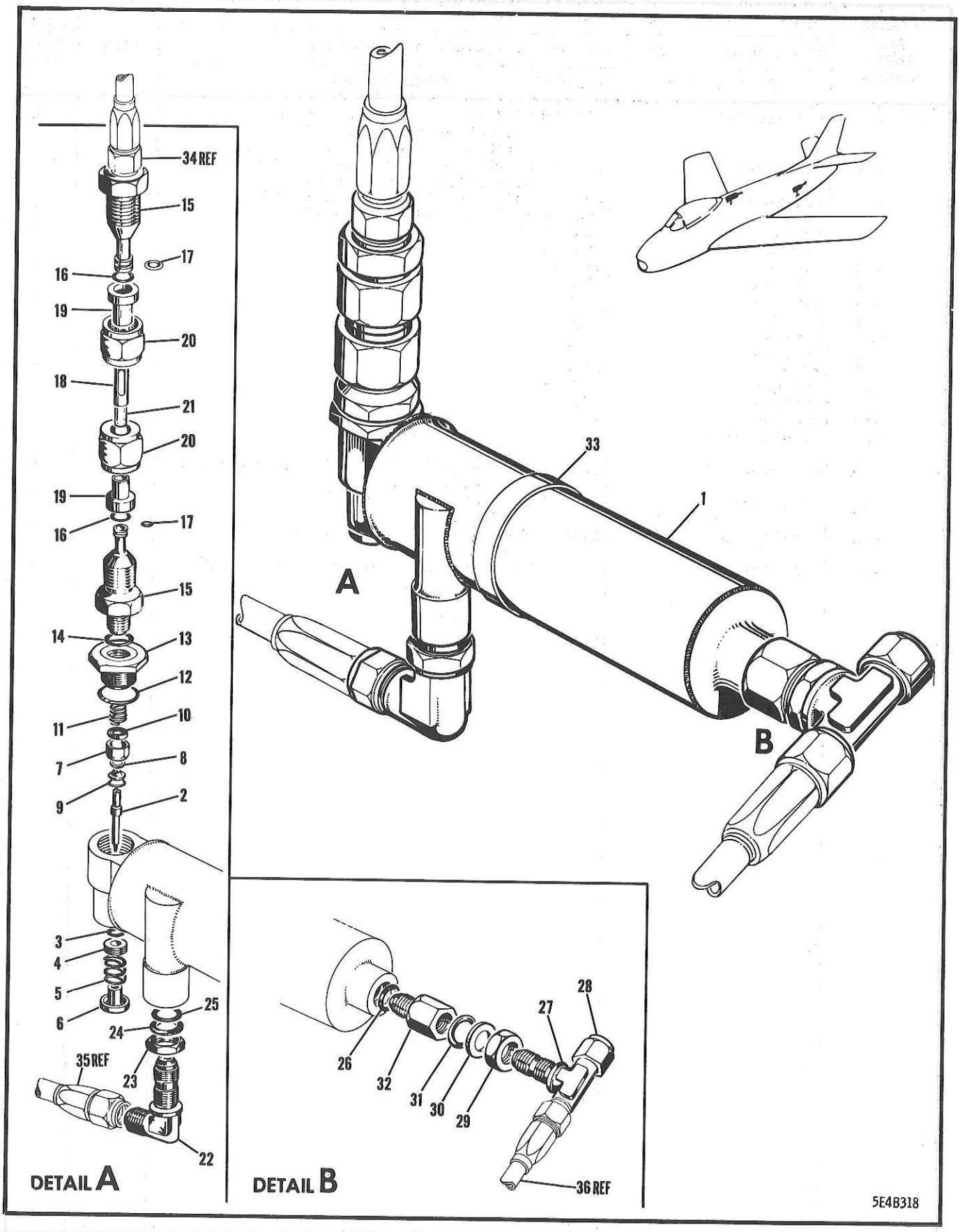

FIGURE 240 ALTERNATE HYDRAULIC RESERVOIR

FIGURE AND INDEX NUMBER	GROUP HYDRAULIC EQUIPMENT MAJOR ASSEMBLY ALTERNATE HYDRAULIC RESERVOIR PART NUMBER	1234567 NOMENCLATURE	CODE	UNITS PER ASSY
240 -	172-58629-3	RESERVOIR ASSY - HYDRAULIC EMERGENCY POWER CONTROL (COMPLETE) (SEE FIG. 210)		1
	165-58061-7	•RESERVOIR ASSY - HYDRAULIC PWR CONTROL		1
- 1	165-58147-3	••SHELL ASSY - HYDRAULIC POWER CTL RSRVR		1
- 2	165-58153	••PLUNGER - HYDRAULIC POWER CONTROL RESERVOIR VALVE OPERATING		1
- 3	AN6227B5	••PACKING -		1
- 4	165-58155	••BUSHING - HYDRAULIC SURFACE CONTROL RESERVOIR VALVE PLUNGER		1
- 5	142-52434	••SPRING - HYDRAULIC POWER CONTROL RESERVOIR VALVE PLUNGER		1
- 6	165-58154	••BUTTON - HYDRAULIC POWER CONTROL RESERVOIR VALVE PLUNGER		1
	165-58479	••POPPET ASSY - HYDRAULIC SURFACE CONTROL RESERVOIR VALVE		1
- 7	165-58367	•••POPPET - HYDRAULIC POWER CTL RSRVR VALVE		1
- 8	165-58476	•••GASKET - HYDRAULIC POWER CONTROL RESERVOIR POPPET		1
- 9	165-58368	•••RETAINER - HYDRAULIC POWER CONTROL RESERVOIR VALVE SEAL		1
-10	AN960C516L	••WASHER -		AR
-11	165-58475	••SPRING - COMPRESSION		1
-12	AN6290-12	••GASKET -		1
-13	165-58156	••BUSHING -		1
-14	AN6290-6	•GASKET -		1
	165-58300-3	•GAUGE ASSY - HYDRAULIC POWER CONTROL AIR-PURGE SIGHT		1
-15	165-58321-3	••FITTING - HYDRAULIC POWER CONTROL AIR-PURGE SIGHT GAUGE		2
-16	AN6227B3	••PACKING -		2
-17	2W1R16-16-62	••WASHER - PLAIN (NAA)		2
	165-58322	••TUBE ASSY - HYDRAULIC POWER CONTROL AIR-PURGE SIGHT GAUGE		1
-18	165-58322-3	•••TUBE - HYDRAULIC PWR/CTL AIR-PURGE SIGHT		1
-19	AN819-10	•••SLEEVE -		2
-20	AN818-10	•••NUT -		2
-21	165-58325	••TUBE - HYDRAULIC SUR CTL AIR-PURGE SIGHT		1
-22	AN833-6	•ELBOW -		1
-23	AN6289-6	•NUT -		1
-24	AN6291-6	•RING -		1
-25	AN6290-6	•GASKET -		1
-26	AN6290-12	•GASKET -		1
-27	AN834-8D	•TEE -		1
-28	AN929-8	•CAP -		1
-29	AN6289D8	•NUT -		1
-30	AN6291-8	•RING -		1
-31	AN6290-8	•GASKET -		1
-32	AN893-16D	•BUSHING -		1
-33	172-58189	•NAME-PLATE - HYDRAULIC EMERGENCY POWER CONTROL RESERVOIR		1
	AN520-10R10	•SCREW - (NAME-PLATE ATTACHING)		1
	AN960D10L	•WASHER -		1
	AN365-1032	•NUT -		1
-34	172-58822-25	LINE ASSY - EMERGENCY POWER CONTROL DRAIN (SEE FIG. 210)		REF
-35	172-58821-57	LINE ASSY - EMERGENCY POWER CONTROL RETURN (SEE FIG. 210)		REF
-36	172-58823-19	LINE ASSY - EMERGENCY SUR CTL PUMP SUCTION (SEE FIG. 210)		REF
		-000-		

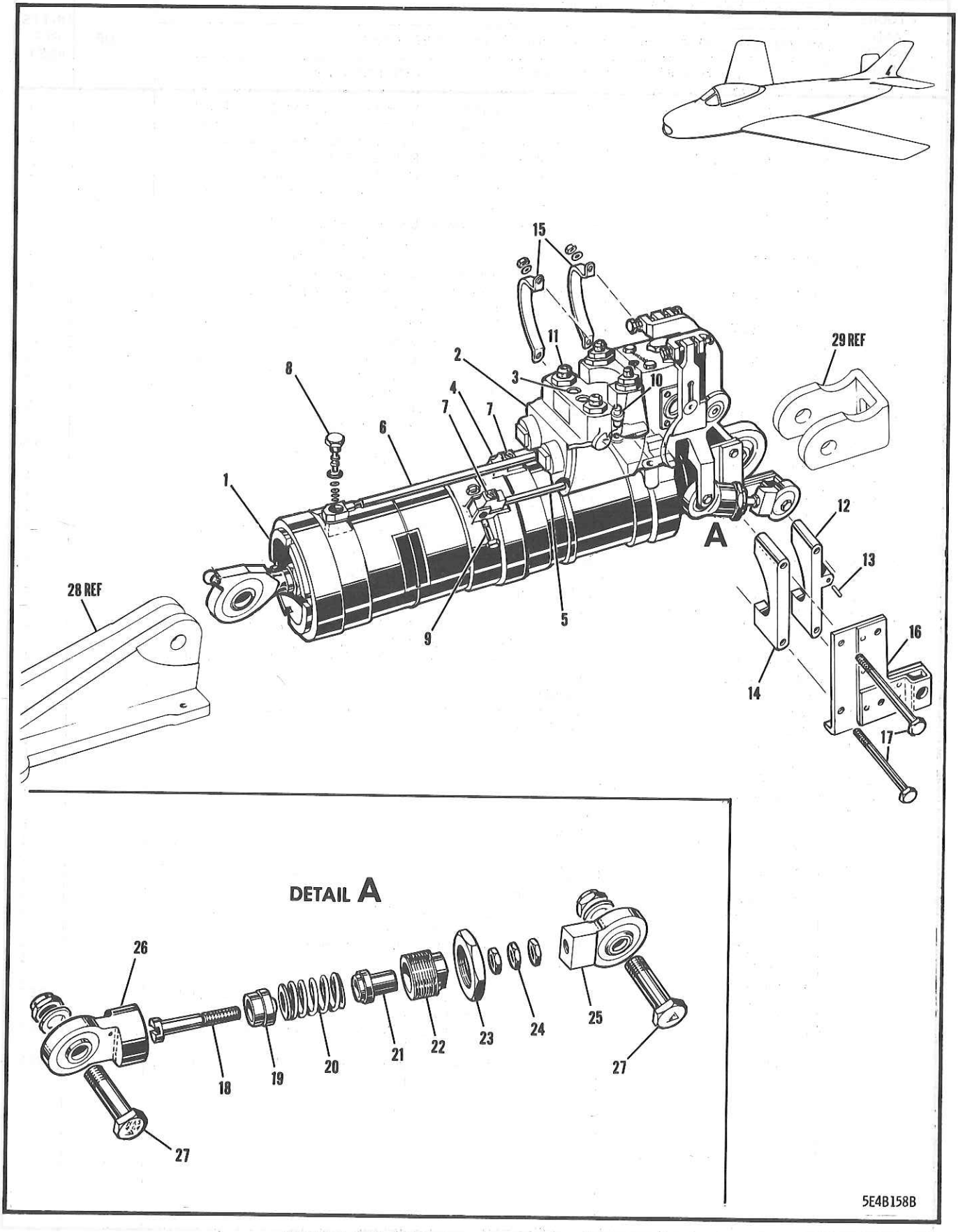

FIGURE 241 STABILIZER CONTROL ACTUATOR

FIGURE AND INDEX NUMBER	GROUP HYDRAULIC EQUIPMENT MAJOR ASSEMBLY STABILIZER CONTROL ACTUATOR PART NUMBER	1234567 NOMENCLATURE	CODE	UNITS PER ASSY
241 -	176-58706-151	CYLINDER ASSY - HYDRAULIC STABILIZER ACTE (SEE SECTION 2)	001-610	1
	176-58706-930	CYLINDER ASSY - HYDRAULIC STABILIZER ACTE	611-688	1
	176-58706-851	CYLINDER ASSY - HYDRAULIC STABILIZER ACTE	689-719	1
	176-58706-853	CYLINDER ASSY - HYDRAULIC STABILIZER ACTE	720-	1
	176-58706-931	SPARE PART ASSY - FOR 176-58706-151 & -930 & -851 & -853		
- 1	176-58706-13	•CYLINDER ASSY - HYDRAULIC STABILIZER ACTE (SEE FIG. 242)		REF
- 2	172-58707-3	•VALVE ASSY - HYDRAULIC STAB. SURFACE CTL (SEE FIG. 243)		REF
- 3	AN174H37A	•BOLT - MPI (VALVE TO CYLINDER ATTACHING)		2
- 4	176-58766-13	•MANIFOLD ASSY - HYDRAULIC CYL FLUID TRANS	A38	1
	165-58766-9	•MANIFOLD - HYDRAULIC	611-688	1
- 5	176-58766-15	•MANIFOLD ASSY - HYDRAULIC CYL FLUID TRANS	A38	1
	165-58766-11	•MANIFOLD - HYDRAULIC	611-688	1
- 6	176-58743	•MANIFOLD ASSY - HYDRAULIC CYL FLUID TRANS	A38	1
	170-58766	•TUBE ASSY - HYDRAULIC STABILIZER CYLINDER FLUID TRANSFER	611-688	1
- 7	176-58765	•FITTING - HYDRAULIC CYL FLUID TRANS MANF OR	A38	2
	NAS144DH12	•BOLT -		2
- 8	176-58742	•BOLT - HYDRAULIC CYL FLUID TRANSFER MANF	A38	1
	NAS144DH17	•BOLT -	611-688	3
	AN6246-4	•RING -	001-370	4
	5R12-4	•RING - TEFLON BACK-UP (NAA)	D13	4
	AN6227B4	•PACKING -		2
	AN6227B4	•PACKING -	A38	4
	AN6290-5	•PACKING -		4
	AN6290-5	•PACKING -	A38	2
	AN6246-6	•RING -	001-370	3
	5R12-6	•RING - TEFLON BACK-UP (NAA)	371-	2
	5R12-6	•RING - TEFLON BACK-UP (NAA)	A38	1
	AN6227B6	•PACKING -		2
	AN6227B6	•PACKING -	A38	1
	AN6227B10	•PACKING -	A38	1
	AN6246-5	•RING -	611-688	3
	AN6227B5	•PACKING -	611-688	3
	AN6227B11	•PACKING -	611-688	3
- 9	NAS464-4A-10	•BOLT - (MANIFOLD FITTING TO CYLINDER ATT)	001-200	2
	NAS464-4A-15	•BOLT - (MANIFOLD FITTING TO CYLINDER ATT)	201-	2
	AN365-428	•NUT -	001-200	2
	AN364-428	•NUT -	201-	2
-10	165-58768	•CONNECTOR - HYDRAULIC		1
	AN6246-6	•RING -	001-370	2
	5R12-6	•RING - TEFLON BACK-UP (NAA)	371-	2
	AN6227B6	•PACKING -		2
-11	AN919-6	•REDUCER -		4
	AN6290-6	•GASKET -		4
-12	176-58730	•BLOCK ASSY - HYDRAULIC STABILIZER VALVE CENTRING BUNGEE		1
-13	176-58726	••PIN - HYDRAULIC STABILIZER VALVE CENTRING BUNGEE BLOCK		1
-14	176-58730-3	•BLOCK - STABILIZER VALVE CENTRING BUNGEE		1
-15	172-58729	•CLAMP - HYDRAULIC STABILIZER VALVE CENTRING BUNGEE		2
-16	172-58740	•BRACKET ASSY - HYDRAULIC STABILIZER VALVE CENTRING BUNGEE		1
-17	AN3-15A	•BOLT - (BRACKET & BLOCK TO CLAMP ATT)		2
	AN3-16A	•BOLT - (BRACKET & BLOCK TO CLAMP ATT)		2

FIGURE AND INDEX NUMBER	GROUP HYDRAULIC EQUIPMENT MAJOR ASSEMBLY STABILIZER CONTROL ACTUATOR PART NUMBER	1234567 NOMENCLATURE	CODE	UNITS PER ASSY
241 -	NAS43DD-4-34	•SPACER -		1
	AN960D10	•WASHER -		4
	AN365-1032	•NUT -		4
	170-587100-7	•BUNGEE ASSY - POWER CONTROL VALVE CENTRING		1
-18	170-587138	••SHAFT - HYDRAULIC POWER CONTROL VALVE CENTRING BUNGEE		1
-19	170-587136	••PISTON - HYDRAULIC POWER CONTROL VALVE CENTRING BUNGEE		1
-20	170-587140	••SPRING - COMPRESSION		1
-21	170-587137	••HEAD - HYDRAULIC POWER CONTROL VALVE CENTRING BUNGEE		1
-22	170-587135	••BARREL - HYDRAULIC POWER CONTROL VALVE CENTRING BUNGEE		1
-23	170-587134	••NUT - HYDRAULIC PWR/CTL VALVE CTR BUNGEE		1
-24	AN316-4R	••NUT -		3
-25	170-587132	••ROD-END ASSY - HYDRAULIC POWER CONTROL VALVE CENTRING BUNGEE		1
	AN200KS4	•••BEARING -		1
-26	170-587133	••HEAD ASSY - HYDRAULIC POWER CONTROL VALVE CENTRING BUNGEE		1
	AN200KS4	•••BEARING -		1
-27	NAS464-4A9	•BOLT - (BUNGEE TO LEVER ATTACHING)		2
	AN960D416	•WASHER -		2
	AN365-428	•NUT -		2
-28	170-23416-7	FITTING ASSY - HORIZONTAL STABILIZER ACTE UPPER ATTACHING (SEE SECTION 2)		REF
-29	170-58786	GUIDE - HORIZONTAL STABILIZER CYLINDER MPI (SEE SECTION 2)		REF

-000-

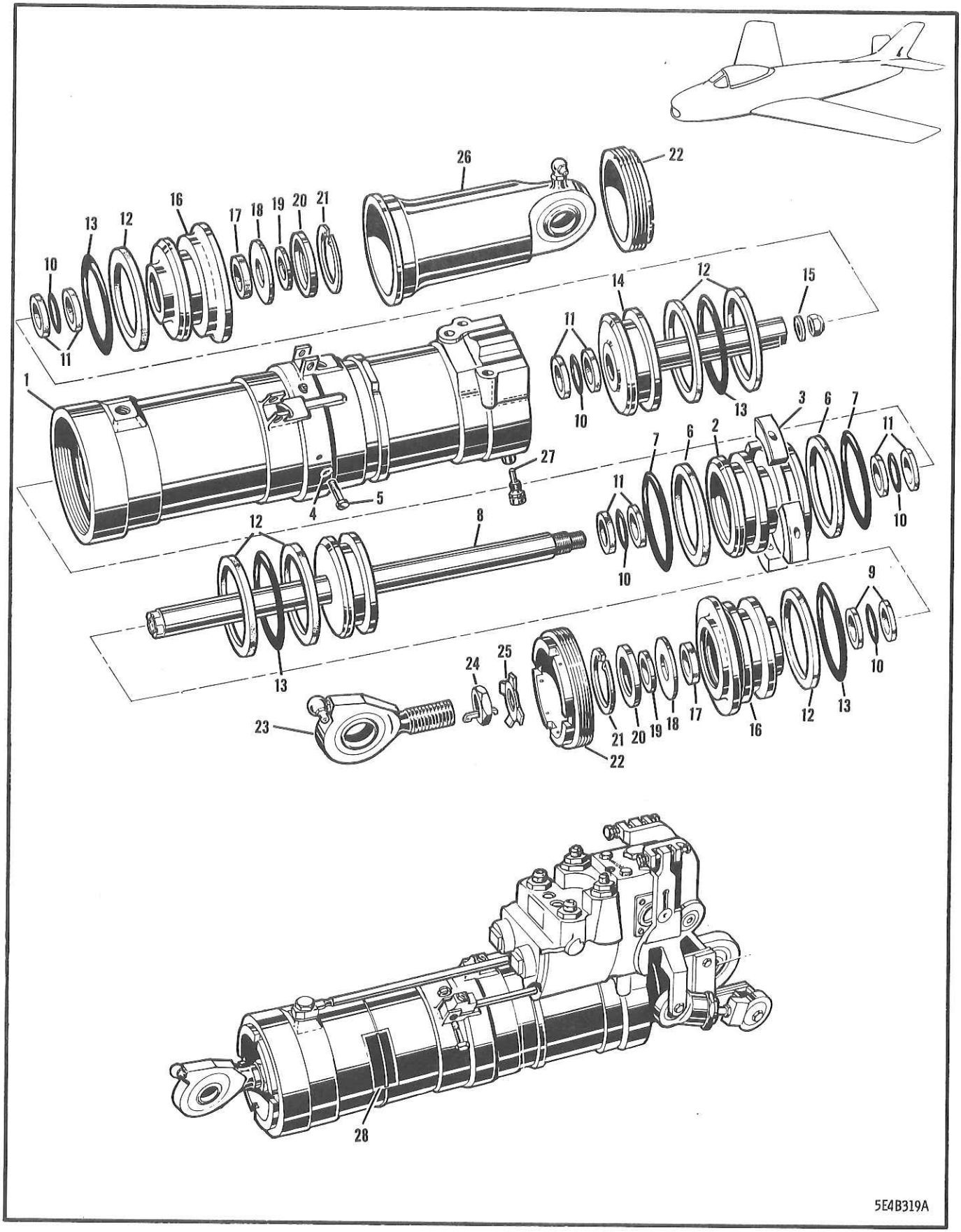

FIGURE 242 STABILIZER CONTROL ACTUATOR CYLINDER

ADVANCE REVISION

Serial #17 dated 13 Jun 61
(Sheet 1 of 3)

The sheets of this Advance Revision are to be inserted in the EO as follows:

Sheet 1 facing page 1022
Sheet 2 facing page 1022
Sheet 3 facing page 1022

FIGURE and INDEX NUMBER	GROUP Stabilizer Control Actuating Cylinder MAJOR ASSEMBLY PART NUMBER	1 2 3 4 5 6 7	NOMENCLATURE	Units Per Assy	Usage on Code
242B-1	172-58751-805		Rod-end assembly hydraulic stabilizer cylinder upper	1	
-2	1N7-12A		Check-nut	1	
-3	S1390-4		Key	1	
-4	S1391-12		Collar	1	
-5	30B-1843		Locking wire	1	
-6	170-58763-800		Rod hydraulic horizontal stabilizer actuating piston-rod	1	

ISSUED ON AUTHORITY OF THE CHIEF OF THE AIR STAFF

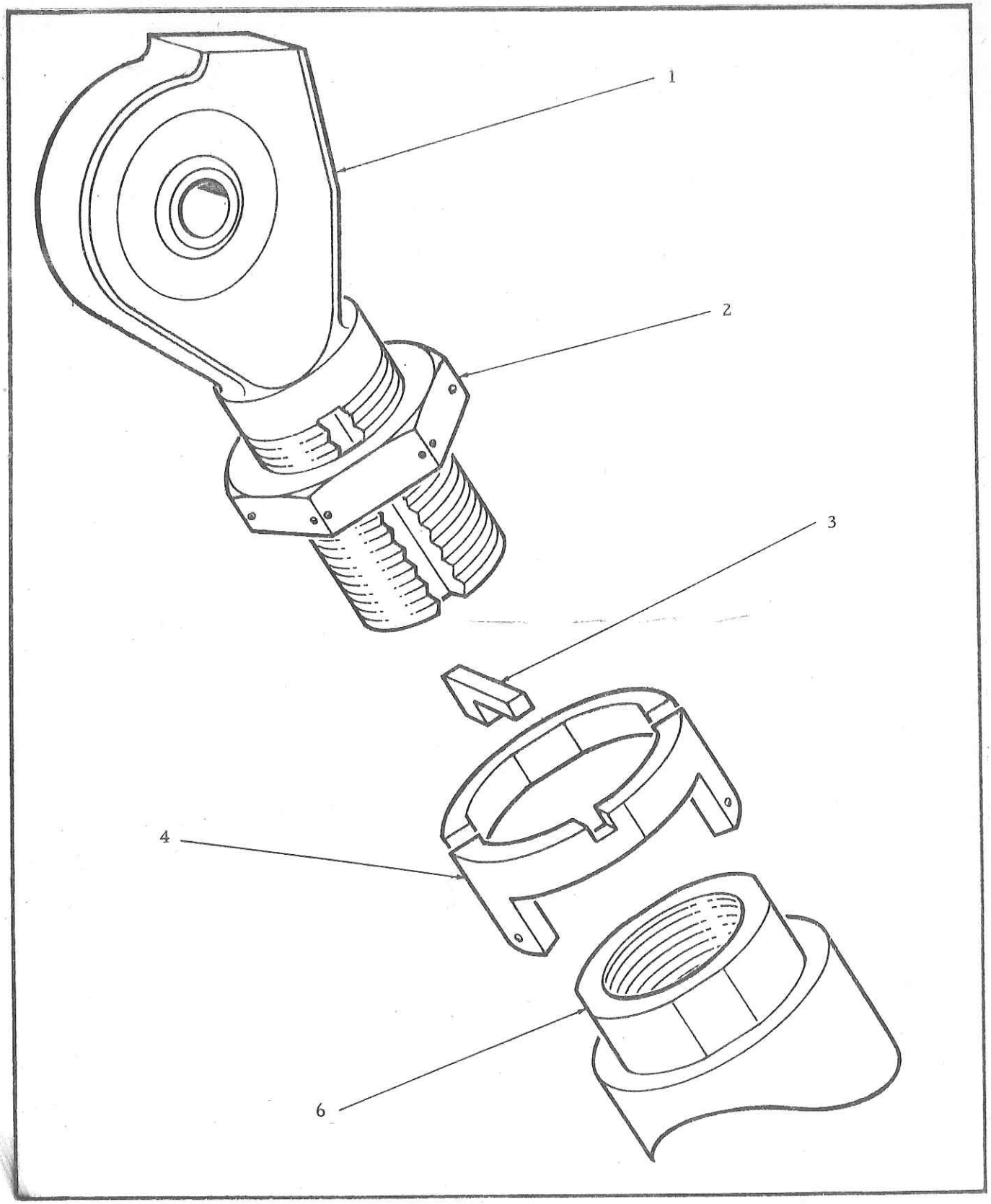

Figure 242 A Locking Device Rod End Assembly Horizontal Stabilizer Actuator



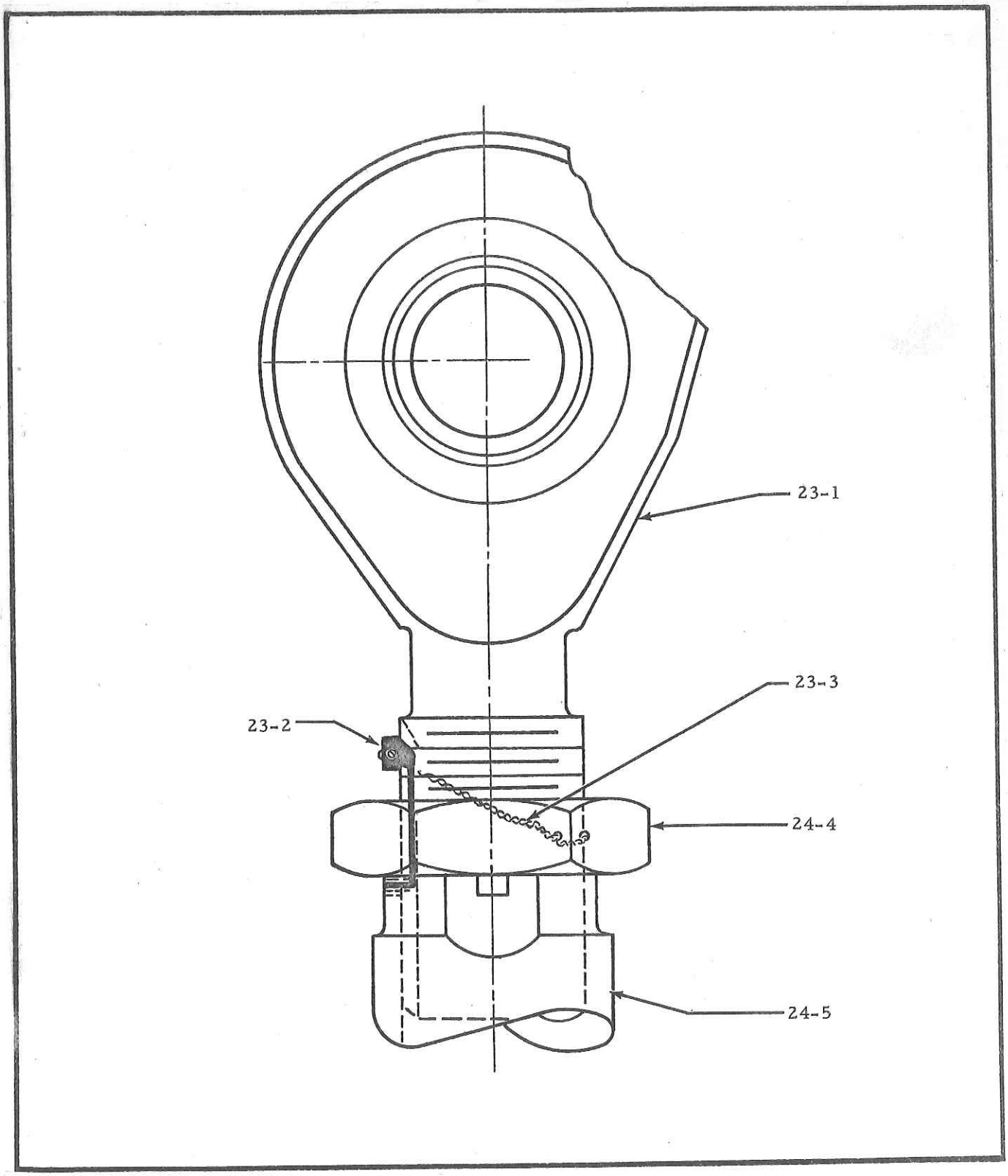

Figure 242B Locking Device Rod End Assembly Horizontal Stabilizer Actuator

ISSUED ON AUTHORITY OF THE CHIEF OF THE AIR STAFF

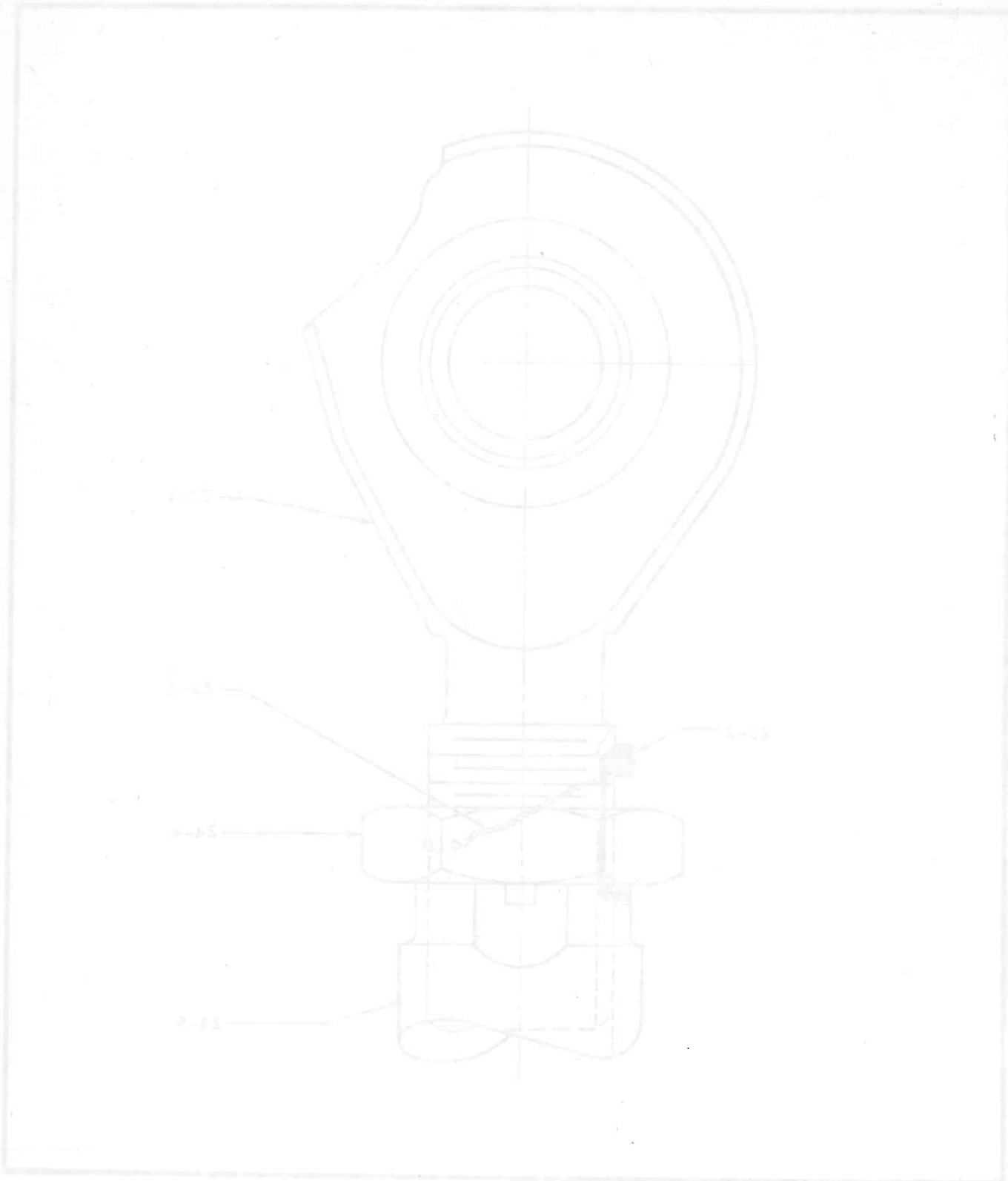

EO 05-5E-4
16 Jan 59

ROYAL CANADIAN AIR FORCE

ADVANCE REVISION

Serial #16 dated 24 Mar 61
(Sheet 1 of 1)

The sheet of this Advance Revision is to be inserted in the EO as follows:-

Sheet 1 facing page 1023

Figure 242

Delete Item 25	2W11A12	Lockwasher Tab	001-719

ISSUED ON AUTHORITY OF THE CHIEF OF THE AIR STAFF

FIGURE AND INDEX NUMBER	GROUP HYDRAULIC EQUIPMENT MAJOR ASSEMBLY STABILIZER CONTROL ACTUATOR CYLINDER PART NUMBER	1234567 NOMENCLATURE	CODE	UNITS PER ASSY
242 -	176-58706-13	CYLINDER ASSY - HYDRAULIC STABILIZER ACTE (SEE FIG. 241)	A38	1
	176-58706-913	CYLINDER ASSY - HYDRAULIC STABILIZER ACTE	611-688	1
	176-58706-11	.BARREL ASSY - STABILIZER ACTUATOR		1
- 1	170-58780-5	..BARREL - HYDRAULIC HORIZONTAL STABILIZER POWER CONTROL CYLINDER	A38	1
	170-58765	..BARREL - HYDRAULIC HORIZONTAL STABILIZER POWER CONTROL CYLINDER	611-688	1
- 2	170-58762	..DIVIDER - HYDRAULIC STABILIZER CYLINDER		1
- 3	170-58752	..KEY - HYDRAULIC STABILIZER CYL DIVIDER		4
- 4	AN960-10	..WASHER -		4
- 5	AN502-10-10	.SCREW - (KEY TO BARREL ATTACHING)		4
- 6	AN6246-32	.RING -	001-370	2
	176-58745	.RING - HYDRAULIC SPIRAL BACK-UP	371-	2
- 7	AN6227B32	.PACKING -		2
- 8	170-58763	.ROD - HYDRAULIC HORIZONTAL STABILIZER ACTUATING CYLINDER	001-719	1
	170-58763-800	.ROD - HYDRAULIC HORIZONTAL STABILIZER ACTUATING CYLINDER	720-	1
- 9	AN6246-19	.RING -	001-370	2
	5R12-19	.RING - TEFLON BACK-UP (NAA)	371-	2
-10	AN6227B19	.PACKING -		5
-11	5R12-19	.RING - TEFLON BACK-UP (NAA)		8
-12	AN6246-32	.RING -	001-370	6
	176-58745	.RING - HYDRAULIC SPIRAL BACK-UP	371-	6
-13	AN6227B32	.PACKING -		4
-14	170-58764	.PISTON - HYDRAULIC STABILIZER CYLINDER		1
-15	170-58756	.WASHER - HYDRAULIC STABILIZER CYLINDER		1
	AN363C524	.NUT -		1
-16	170-58755	.HEAD - HYDRAULIC STABILIZER ACTE CYLINDER		1
-17	2W12-19	.WASHER - FELT (NAA)		2
-18	2W1ALP65-46-40	.WASHER - PLAIN (NAA)		2
-19	AN6231A9	.SCRAPER -		2
-20	7R4-19D	.RETAINER - WIPER RING (NAA)		2
-21	NAS50-145	.RING -		2
-22	170-58753	.RETAINER - HYDRAULIC STABILIZER CYL HEAD		2
-23	172-58751-5	.ROD-END ASSY - HYDRAULIC STAB. CYL UPPER	001-719	1
		OR		
	172-58751	.ROD-END ASSY - HYDRAULIC STAB. CYL UPPER	001-719	
	172-58751-805	.ROD-END ASSY - HYDRAULIC STAB. CYL UPPER	720-	1
	HSBG10SA	..BEARING - (HLF)		1
	AN944-301	..FITTING -		1
-24	1N7-12	.CHECK-NUT - (NAA)	001-719	1
	1N7-12A	.CHECK-NUT - (NAA)	720-	1
-25	2W11A12	.LOCK-WASHER - TAB (NAA)	001-719	1
	NAS559-4	.LOCK -	720-	1
-26	172-58754-5	.END ASSY - HYDRAULIC STAB. CYLINDER LOWER		1
		OR		
	170-58754	.END ASSY - HYDRAULIC STAB. CYLINDER LOWER		
	HSBG10SA	..BEARING - (HLF)		1
	AN944-301	..FITTING -		1
-27	170-58798	.LOCK-SCREW - HYDRAULIC STABILIZER ACTE CYL		1
-28	13-71035	.NAME-PLATE - HYDRAULIC (LOCKWIRED TO BRL)		1
		-000-		

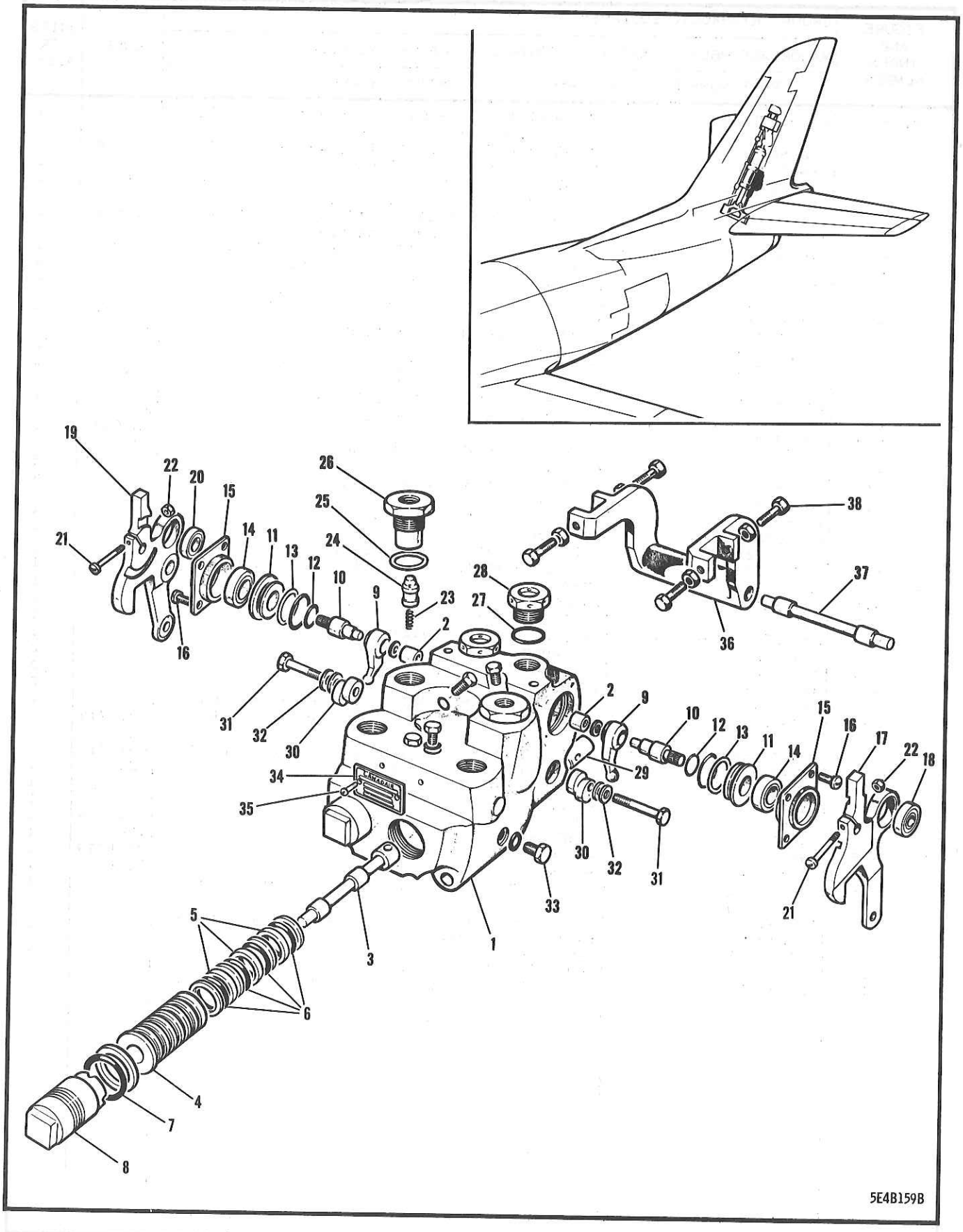

FIGURE 243 STABILIZER CONTROL VALVE

FIGURE AND INDEX NUMBER	GROUP HYDRAULIC EQUIPMENT MAJOR ASSEMBLY STABILIZER CONTROL VALVE PART NUMBER	1234567 NOMENCLATURE	CODE	UNITS PER ASSY
243 -	172-58707-3	VALVE ASSY - HYDRAULIC STABILIZER SUR CTL (SEE FIG. 241)	001-610	1
	172-58707-803	VALVE ASSY - HYDRAULIC STABILIZER SUR CTL	611-	1
	165-58776-9	.BODY ASSY - HYDRAULIC STAB. PWR/CTL VALVE		1
- 1	165-58776-7	..BODY ASSY - HYDRAULIC STABILIZER POWER CONTROL VALVE (MAKE FROM 165-58776)		1
- 2	4B19S6-011	..BUSHING - PRESS-FIT PLAIN (NAA)		2
	170-587122-3	.SLEEVE ASSY - HYDRAULIC POWER CTL NOTCHED .050 TRAVEL VALVE		2
- 3	170-587121-3	..SPOOL - HYDRAULIC POWER CONTROL NOTCHED .030 TRAVEL VALVE		1
- 4	165-587179	..SLEEVE - HYDRAULIC POWER CONTROL VALVE		1
- 5	165-587227	..FILTER - HYDRAULIC POWER CONTROL VALVE		3
- 6	AN6227B14	.PACKING -		8
	AN6246-14	.RING -	001-200	8
	5R12-14	.RING - TEFLON BACK-UP (NAA)	201-	8
- 7	AN6227B19	.PACKING -		2
	AN6246-19	.RING -		2
- 8	165-58770	.CAP - HYDRAULIC VALVE SLEEVE RETAINING		2
	2W1LB24-20-16	.WASHER - PLAIN (NAA)		AR
	165-58782-7	.LEVER ASSY - HYDRAULIC STABILIZER POWER CONTROL VALVE		2
- 9	165-58782-5	..ARM - HYDRAULIC STABILIZER POWER CONTROL VALVE LEVER		1
-10	165-58782-3	..SHAFT - HYDRAULIC STAB. POWER CTL VALVE		1
-11	165-587195	.SEAL - HYDRAULIC HOR/STAB POWER CONTROL VALVE SHAFT		2
-12	AN6227B12	.PACKING -		2
-13	AN6227B17	.PACKING -		2
	AN6246-17	.RING -	001-200	2
	5R12-17	.RING - TEFLON BACK-UP (NAA)	201-	2
	170-58779-9	.BEARING ASSY - HYDRAULIC HOR STABILIZER POWER CONTROL VALVE		2
-14	AN201KP8A	..BEARING -		1
-15	170-58779-7	..CAGE - HYDRAULIC HORIZONTAL STAB. POWER CONTROL VALVE BEARING		1
-16	AN502-10-8	.SCREW - (BEARING CAGE TO VALVE BODY ATT)		8
-17	172-58727	.LEVER ASSY - HYDRAULIC HOR/STAB SURFACE CONTROL VALVE LH		1
-18	AN200KS4	..BEARING -		1
-19	172-58733	.LEVER ASSY - HYDRAULIC HOR/STAB SURFACE CONTROL VALVE RH		1
-20	AN200KS3L	..BEARING -		1
	AN200KS4	..BEARING -		1
-21	AN502-10-18	.SCREW - (LEVER TO SHAFT ATTACHING)	001-020	2
	13-92040	.BOLT - HORIZONTAL STABILIZER VALVE LEVER	021-	2
-22	AN365-1032	.NUT -		2
-23	165-58775	.SPRING - COMPRESSION		2
-24	165-58733	.POPPET - HYDRAULIC INTEGRAL CHECK VALVE		2
-25	AN6290-10	.GASKET -		2
-26	172-58732	.CAGE - HYDRAULIC CHECK VALVE		2
-27	AN6290-8	.GASKET -		2
-28	AN814-8D	.PLUG & BLEEDER -		2
-29	165-58785-3	.TRUNNION - HYDRAULIC STAB. POWER CTL VALVE ADJUSTABLE STOP		2
-30	165-58784	.STOP - HYDRAULIC STABILIZER POWER CONTROL VALVE ADJUSTABLE		2
-31	AN4H10A	.BOLT - (STOP ATTACHING)		2
-32	172-58739	.WASHER - HYDRAULIC STABILIZER POWER CTL VALVE TAB		2

FIGURE AND INDEX NUMBER	GROUP HYDRAULIC EQUIPMENT MAJOR ASSEMBLY STABILIZER CONTROL VALVE PART NUMBER	1234567 NOMENCLATURE	CODE	UNITS PER ASSY
243 -	2W1AL16-14-32	•WASHER - PLAIN (NAA)		2
-33	1P6S	•PLUG - HYDRAULIC (NAA)		9
	AN6227B2	•PACKING -		9
-34	13-71035	•NAME-PLATE - HYDRAULIC		1
-35	AN535-00-2	•SCREW - (NAME-PLATE TO VALVE BODY ATT)		2
	172-58736	•TORQUE BAR ASSY - HYDRAULIC HORIZONTAL SUR CONTROL VALVE		1
-36	172-58734	••TORQUE BAR - HYDRAULIC HORIZONTAL SURFACE CONTROL VALVE		1
-37	172-58735	••SHAFT - HYDRAULIC HOR SURFACE CTL VALVE		1
-38	NAS428H4-7	•BOLT - (TORQUE BAR ADJUSTING)		4
	AN316-4	•NUT -		4

-000-

SECTION 12

FUEL SYSTEM

TABLE OF CONTENTS

FIGURE	TITLE	PAGE
244	CENTRE WING FUEL SYSTEM	1028
245	CENTRE WING FUEL CELL	1032
246	CENTRE WING INTERCONNECTING SYSTEM	1036
247	OUTER WING FUEL SYSTEM	1038
248	OUTER WING FUEL CELLS	1042
249	FUSELAGE FORWARD FUEL CELL	1046
250	FUSELAGE REAR FUEL CELL	1050
251	FUSELAGE FUEL CELL LINERS	1052
252	FUSELAGE FORWARD TANK FUEL SYSTEM	1054
253	FUSELAGE REAR TANK FUEL SYSTEM	1058
254	REAR FUEL CELL FILLER NECK	1062
255	FORWARD TO OUTER FUEL CELL VENT	1064
256	FUEL SHUT-OFF VALVE	1066
257	FUSELAGE SECTION DROP TANK FUEL & PRESSURE	1068
258	LEADING EDGE FUEL & PRESSURE EQUIPMENT (EFFECTIVE AIRCRAFT 23001 TO 23370 INCL)	1072
259	LEADING EDGE FUEL & PRESSURE EQUIPMENT (EFFECTIVE AIRCRAFT 23371 & SUBS)	1078
260	DROP FUEL TANK RELIEF-VALVE	1082
261	DROP FUEL TANK JETTISON MECHANISM (FUSELAGE) (EFFECTIVE AIRCRAFT 23001 TO 23210 INCL)	1084
262	DROP FUEL TANK JETTISON MECHANISM (WING) (EFFECTIVE AIRCRAFT 23001 TO 23210 INCL)	1088
263	DROP FUEL TANK RELEASE MECHANISM	1092
264	100-GALLON DROP FUEL TANK EQUIPMENT	1096
265	100-GALLON DROP FUEL TANK	1100
266	FORWARD SECTION 100-GALLON DROP FUEL TANK	1106
267	167-GALLON DROP FUEL TANK EQUIPMENT	1108
268	167-GALLON DROP FUEL TANK	1112

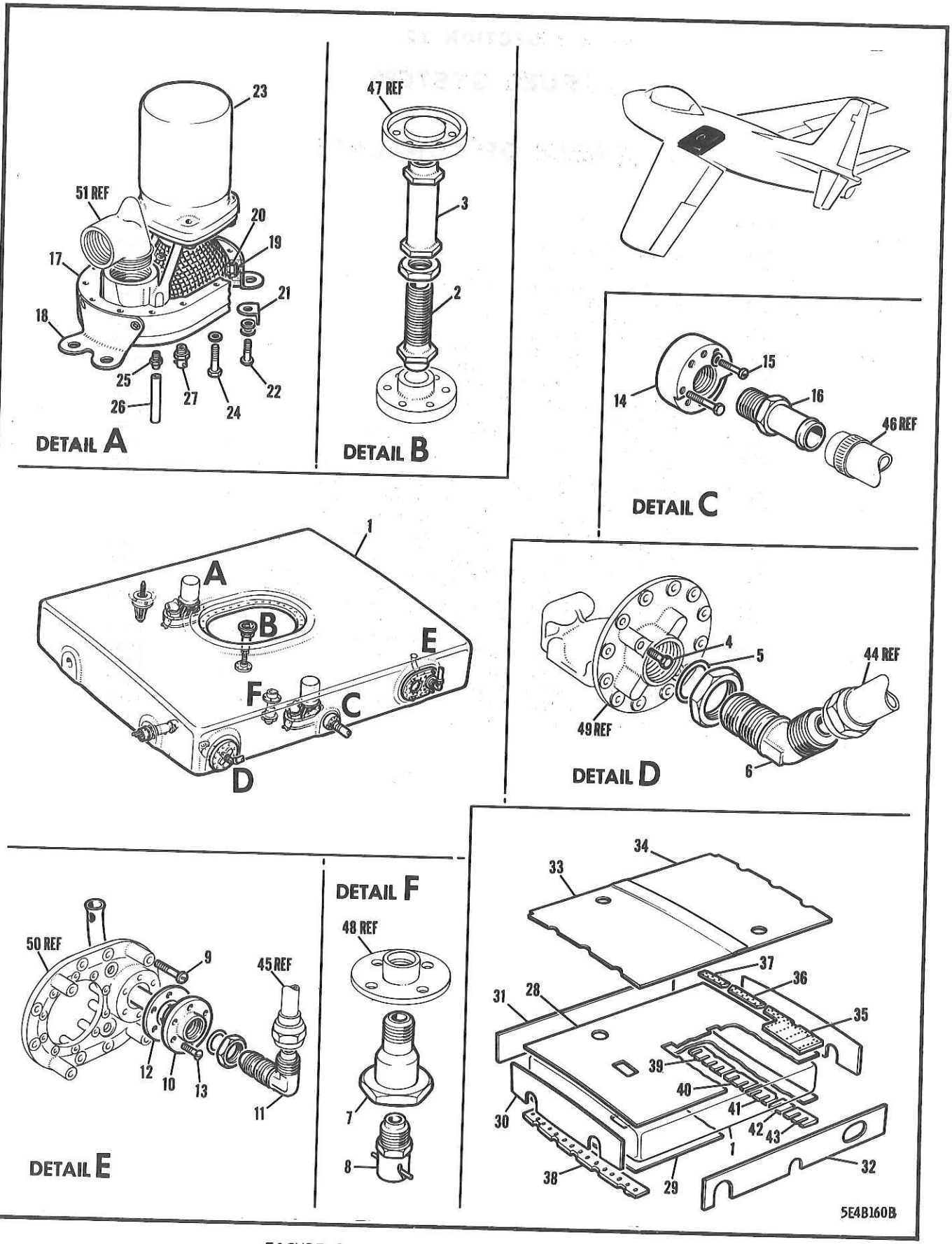

FIGURE 244 CENTRE WING FUEL SYSTEM

FIGURE AND INDEX NUMBER	GROUP FUEL SYSTEM MAJOR ASSEMBLY CENTRE WING FUEL SYSTEM PART NUMBER	1234567 NOMENCLATURE	CODE	UNITS PER ASSY
244 -	172-48013	FUEL SYSTEM INSTL - CENTRE WING (SEE SECTION 1)		NP
- 1	172-48022	•CELL ASSY - CENTRE WING FUEL (SEE FIG. 245)		REF
	151-13046	•TUBE ASSY - W/CTR/SECT FUEL CELL COMPR		1
- 2	151-13045	••TUBE - FUEL CELL COMPRESSION LOWER		1
	AN364-1414	••NUT -		1
- 3	151-13044	••TUBE - FUEL CELL COMPRESSION UPPER		1
- 4	AN4H4	•BOLT -		2
- 5	AF934-116	•PACKING - O-RING GASOLINE OR KEROSENE	001-100	1
	MS29513-128	•PACKING - O-RING HYDROCARBON FUEL RES	101-	1
	AN924-20D	•NUT -		1
- 6	AN837-20D	•ELBOW -		1
- 7	151-48129-11	•ADAPTER - FUEL CELL SUMP DRAIN EXTENSION		1
- 8	CCA-4900	•VALVE - DRAIN (CAD)		1
- 9	AN502-416-24	•SCREW - (DOOR TO CELL ATTACHING)		4
	172-48184	•ADAPTER ASSY - FUEL CELL VENT LINE		1
-10	172-48183	••ADAPTER ASSY - FUEL CELL VENT LINE		1
	AF934-14	••PACKING - O-RING GASOLINE OR KEROSENE	001-100	1
	MS29512-10	••GASKET - FUEL RESISTANT STRAIGHT THREAD TUBE FITTING BOSS	101-	1
	AN924-10D	••NUT -		1
-11	AN833-10D	••ELBOW -		1
-12	172-48010	•GASKET - FUEL CELL VENT LINE ADAPTER		1
-13	AN502-10-8	•SCREW -		6
-14	140-48042	•ADAPTER - REAR FUS TO CTR/W TRANSFER LINE		1
	AN4H13	•BOLT - (ADAPTER TO CELL ATTACHING)		6
-15	AN501-10-10	•SCREW - (ADAPTER TO CELL ATTACHING)		2
	AN960D10L	•WASHER -		2
-16	AN840-16	•ADAPTER -		1
	151-48181	•ADAPTER ASSY - CTR/W FUEL CELL BSTR PUMP		2
-17	151-48064-11	••ADAPTER - FUEL CELL BOOSTER PUMP		1
-18	151-48179	••BRACKET - BOOSTER PUMP ADAPTER SUPPORT		2
	AN509-8-11	••SCREW - (BRACKET TO ADAPTER ATTACHING)		4
-19	AF934-2	••PACKING - O-RING GASOLINE OR KEROSENE		4
	2W1AL11-14-64	••WASHER - PLAIN (NAA)		4
-20	NAS43DD-3-8	••SPACER -		4
	AN365-832	••NUT -		4
-21	2C16-3	•CLIP - CONDUIT (NAA) (FORWARD ADAPTER)		2
	2W1AL14-20-40	•WASHER - PLAIN (NAA) (FWD ADAPTER)		4
	2W1AL14-16-40	•WASHER - PLAIN (NAA) (REAR ADAPTER)		4
-22	NAS221-12	•SCREW -		8
-23	TF31400-3	•PUMP ASSY - BOOSTER (WITH TF12907-1 & TF13542 GASKETS) (TPI)		2
	AN76A43	•BOLT - (REPLACES AN76A45 SUPLD WITH PUMP)		2
	10B1-6-4-3	•JUMPER - (NAA)		2
	AN960-416L	•WASHER - (REAR PUMP)		12
-24	AN74-14	•BOLT -		24
-25	AN840-4	•ADAPTER -		2
-26	140-48804-7	•LINE - SEAL DRAIN (FORWARD BOOSTER PUMP)		1
	140-48804-5	•LINE - SEAL DRAIN (REAR BOOSTER PUMP)		1
-27	CCA-4850	•VALVE - SELF-LOCKING HYDRAULIC DRAIN (CAD)		2
	151-48019	•LINER INSTL - CENTRE WING FUEL CELL		NP
-28	151-48011-801	••LINER ASSY - CENTRE WING FUEL CELL UPPER	611-	1
-29	151-48012-111	••LINER ASSY - CENTRE WING FUEL CELL LOWER		1
-30	151-48015	••LINER - CENTRE WING FUEL CELL OUTBOARD		2
-31	151-48016	••LINER - CENTRE WING FUEL CELL FORWARD		1
-32	151-48017	••LINER - CENTRE WING FUEL CELL REAR		1
-33	151-48042-3	•LINER - FORWARD FUS FUEL CELL UPPER LH		1
-34	151-48042-4	•LINER - FORWARD FUS FUEL CELL UPPER RH		1

FIGURE AND INDEX NUMBER	GROUP FUEL SYSTEM MAJOR ASSEMBLY CENTRE WING FUEL SYSTEM PART NUMBER	1234567 NOMENCLATURE	CODE	UNITS PER ASSY
244 -35	151-48100-3	•BLOCK - FORWARD FUS FUEL CELL LWR SUR SUP•		2
-36	151-48100-5	•BLOCK - FORWARD FUS FUEL CELL LWR SUR SUP•		2
-37	151-48100-7	•BLOCK - FORWARD FUS FUEL CELL LWR SUR SUP•		2
-38	151-48127	•BLOCK - CTR/W OUTBOARD LOWER SUPPORT LH		1
-39	151-48128-3	•BLOCK - CTR/W OUTBOARD LOWER SUPPORT RH		1
-40	151-48128-5	•BLOCK - CTR/W OUTBOARD LOWER SUPPORT RH		1
-41	151-48128-7	•BLOCK - CTR/W OUTBOARD LOWER SUPPORT RH		1
-42	151-48128-9	•BLOCK - CTR/W OUTBOARD LOWER SUPPORT RH		1
-43	151-48128-11	•BLOCK - CTR/W OUTBOARD LOWER SUPPORT RH		1
	SS-48143	•BUTTON - STANDARD TYPE PLUG (UCF)		4
-44	172-48874	LINE ASSY - FUEL (SEE FIG• 253)		REF
-45	172-48861	LINE ASSY - FUEL (SEE FIG• 252)		REF
-46	172-48831-135	LINE - FUEL (SEE FIG• 253)		REF
-47	151-13017	FITTING - FUEL CELL SUPPORT (SEE FIG• 245)		REF
-48	151-48122	ADAPTER - FUEL CELL SUMP DRAIN (SEE FIG• 245)		REF
-49	172-48029	BODY ASSY - (SUCTION FEED VALVE) (SEE FIG• 245)		REF
-50	140-48022-11	DOOR - FUEL CELL REAR ACCESS (SEE FIG• 245)		REF
-51	151-48025	ADAPTER - FUEL BOOSTER PUMP OUTLET (SEE FIG• 245)		REF

-000-

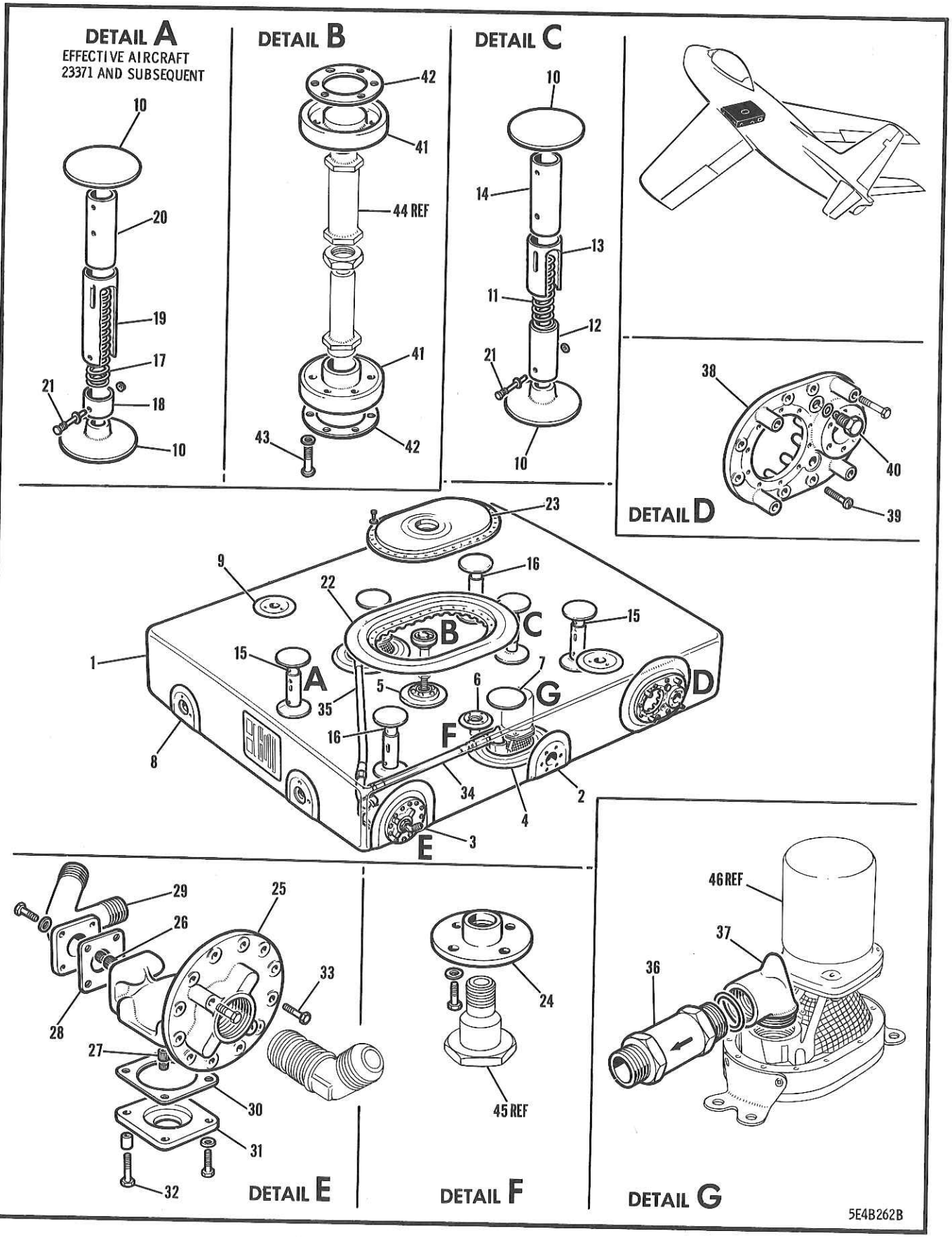

FIGURE 245 CENTRE WING FUEL CELL

FIGURE AND INDEX NUMBER	GROUP FUEL SYSTEM MAJOR ASSEMBLY CENTRE WING FUEL CELL PART NUMBER	1234567 NOMENCLATURE	CODE	UNITS PER ASSY
245 -	172-48022	CELL ASSY - CENTRE WING FUEL (SEE FIG. 244)		1
	151-48002-501	•CELL ASSY - CENTRE WING FUEL		1
- 1	151-48002-3	••CELL - 61 IMP.(73.2 U.S.) GAL CTR/W FUEL		1
- 2	AN4127-2	••FITTING -		1
- 3	AN4127-7	••FITTING -		3
- 4	AN4135-1	••FITTING -		1
- 5	AN4130-23	••FITTING -		1
- 6	AN4130-1	••FITTING -		2
- 7	151-48002-6	••PAD - BOOSTER PUMP		4
- 8	151-48002-7	••FITTING - INTERCONNECTOR LINE		2
- 9	151-48002-8	••FITTING - INTERCONNECTOR LINE		10
-10	151-48002-11	••FITTING - FUEL CELL POST	001-370	5
-11	151-48177-7	••SPRING - FUEL CELL SUPPORT POST	001-370	5
-12	151-48002-17	••POST - FUEL CELL LOWER SUPPORT	001-370	5
-13	151-48002-16	••GUIDE - FUEL CELL POST	001-370	1
-14	151-48002-20	••POST - FUEL CELL UPPER	001-370	2
-15	151-48002-18	••POST - FUEL CELL UPPER	001-370	2
-16	151-48002-19	••POST - FUEL CELL UPPER SUPPORT	371-	5
-17	172-48112-5	••SPRING - COMPRESSION	371-	5
-18	151-48002-27	••POST - FUEL CELL LOWER SUPPORT	371-	5
-19	151-48002-31	••GUIDE - FUEL CELL POST	371-	5
-20	151-48002-29	••POST - FUEL CELL UPPER SUPPORT		15
-21	FCA-16623	••PIN ASSY - (USR) (SUPPORT POST)		1
-22	151-48002-5	••FITTING - FUEL CELL ACCESS DOOR		1
-23	151-48002-9	••DOOR ASSY - FUEL CELL ACCESS		36
	AN4H4A	••BOLT - (DOOR TO CELL ATTACHING)		36
	AN960-416L	••WASHER -		2
	151-48002-25	••DECALCOMANIA - CENTRE WING FUEL CELL		1
-24	151-48122	•ADAPTER - FUEL CELL SUMP DRAIN		4
	AN4H4A	•BOLT - (ADAPTER TO CELL ATTACHING)		4
	AN960D416	•WASHER -		1
	172-48028	•VALVE ASSY - CTR/W FUEL CELL SUCTION FEED		1
-25	172-48029	••BODY ASSY - SUCTION FEED VALVE XRI		4
-26	RD206SH-6.5L	•••INSERT - LOCKED-IN (ROS)		4
	RL28SB-8	•••LOCK-RING - STANDARD (ROS)		4
-27	RD205SH-5.5L	•••INSERT - LOCKED-IN (ROS)		4
	RL24SB-7	•••LOCK-RING - STANDARD (ROS)		1
-28	172-48025	••GASKET - SUCTION FEED VALVE FITTING		1
-29	172-48027	••FITTING - SUCTION FEED VALVE		4
	AN4-5A	••BOLT - (FITTING TO BODY ATTACHING)		4
	AN960D416L	••WASHER -		1
-30	172-48026	••GASKET - SUCTION FEED VALVE		1
-31	5-8800	••VALVE ASSY - SUCTION FEED (SWE) (SPEC DWG 172-948011 (NAA)) OR		
	10-2750-79	••VALVE ASSY - SUCTION FEED (PAC) (SPEC DWG 172-948011 (NAA))		
-32	AN3-7A	••BOLT - (VALVE TO BODY ATTACHING)		2
	4S3-D10-12	••SPACER - BOLT (NAA)		2
	AN3-4A	••BOLT - (VALVE TO BODY ATTACHING)		2
	AN960D10L	••WASHER -		2
-33	AN4H4A	•BOLT - (VALVE TO CELL ATTACHING)		12
-34	AN6264-16D11-7/8	•HOSE ASSY - DETACHABLE END SWIVEL FITTING		1
-35	AN6264-16D23	•HOSE ASSY - DETACHABLE END SWIVEL FITTING		1
-36	1-1045-76	•VALVE - SWING CHECK (PAC) (FUEL BSTR PUMP) OR		2
	K-1339-16-1	•VALVE - SWING CHECK (KCO) (FUEL BSTR PUMP)		
	MS29512-16	•GASKET - FUEL RESISTANT STRAIGHT THD TUBE FITTING BOSS		2
-37	151-48025	•ADAPTER - FUEL BOOSTER PUMP OUTLET		2

FIGURE AND INDEX NUMBER	GROUP FUEL SYSTEM MAJOR ASSEMBLY CENTRE WING FUEL CELL PART NUMBER	1234567 NOMENCLATURE	CODE	UNITS PER ASSY
245 -38	140-48022-11	•DOOR - FUEL CELL REAR ACCESS		1
-39	AN502-416-10	•SCREW - (DOOR TO CELL ATTACHING)		8
-40	151-51088	•PLUG ASSY - FUEL LEVEL TRANSMITTER ACCESS		1
	AN814-2	••PLUG -		1
	151-51088-3	••WIRE - FUEL LEVEL XMTR ACCESS PLUG		1
	MS29512-2	•GASKET - FUEL RESISTANT STRAIGHT THD TUBE FITTING BOSS		1
-41	151-13017	•FITTING - FUEL CELL SUPPORT		2
-42	172-48030	•RING - FUEL CELL SUPPORT FITTING		2
-43	NAS222-9	•SCREW - (RING TO FITTING ATTACHING)		12
	AN935-416	•WASHER -		12
-44	151-13044	TUBE - W/CTR/SECT FUEL CELL COMPRESSION UP. (SEE FIG. 244)		REF
-45	151-48129-11	ADAPTER - CTR/W FUEL CELL SUMP DRAIN EXTN (SEE FIG. 244)		REF
-46	TF31400-3	PUMP ASSY - SUBMERGED BSTR (SEE FIG. 244)		REF
		-000-		

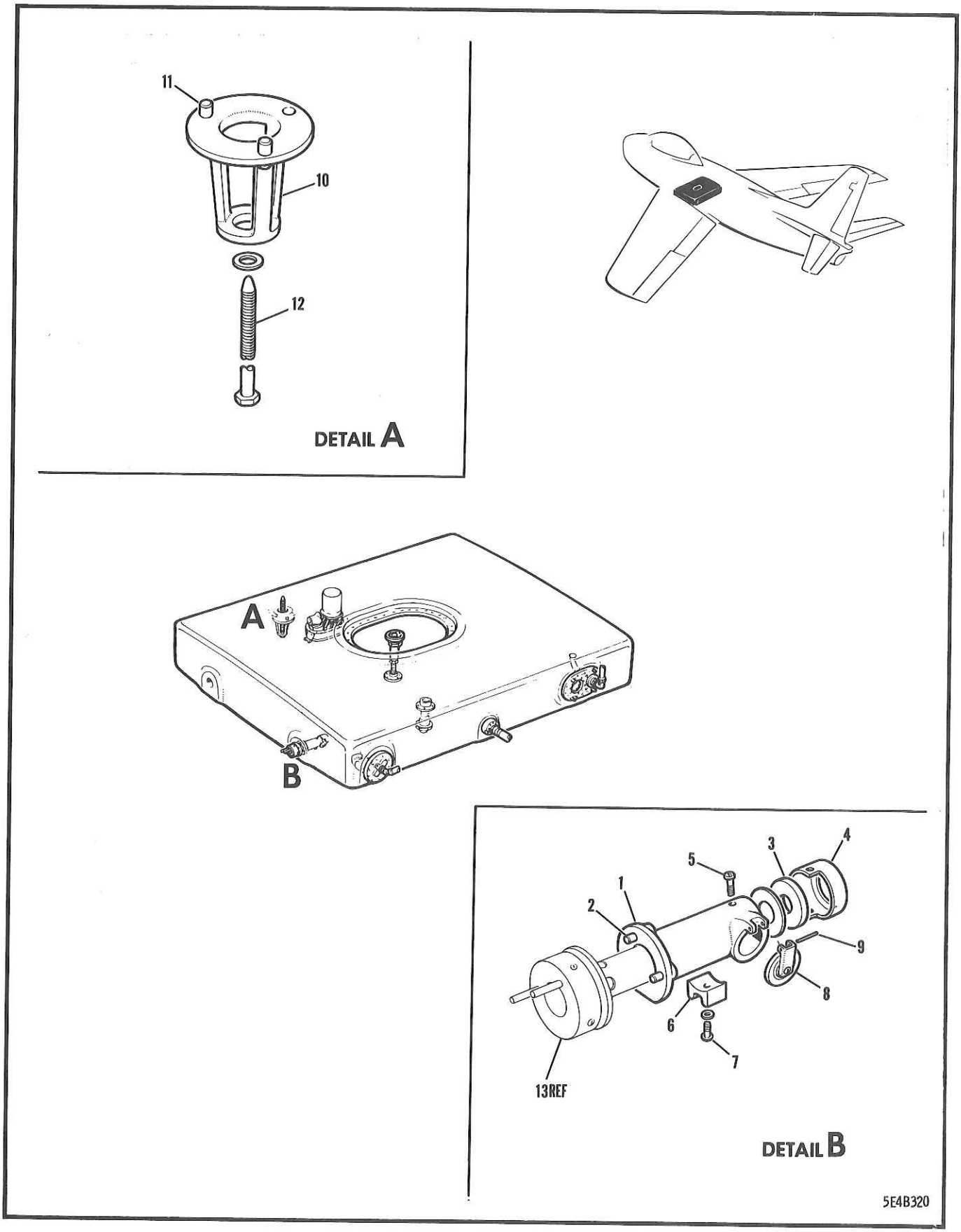

FIGURE 246 CENTRE WING INTERCONNECTING SYSTEM

FIGURE AND INDEX NUMBER	GROUP FUEL SYSTEM MAJOR ASSEMBLY CENTRE WING INTERCONNECTING SYSTEM PART NUMBER	1234567 NOMENCLATURE	CODE	UNITS PER ASSY
246 -	170-10001	WING INSTL - COMPLETE (SEE SECTION 1)		REF
	172-48107-1	•VALVE ASSY - FUEL CELL OUTER TO CTR/W INTERCONN CHECK (LH FORWARD RH REAR)	001-350	2
	172-48107-11	•VALVE ASSY - FUEL CELL OUTER TO CTR/W INTERCONN CHECK (LH FWD RH REAR)	351-	2
	172-48107-2	•VALVE ASSY - FUEL CELL OUTER TO CTR/W INTERCONN CHECK (LH REAR RH FORWARD)	001-350	2
	172-48107-12	•VALVE ASSY - FUEL CELL OUTER TO CTR/W INTERCONN CHECK (LH REAR RH FORWARD)	351-	2
- 1	151-48126-31	••BODY ASSY - OUTER TO CTR/W FUEL CELL INTERCONN CV (LH FORWARD RH REAR)		1
	151-48126-32	••BODY ASSY - OUTER TO CTR/W FUEL CELL INTERCONN CV (LH REAR RH FORWARD)		1
- 2	151-48109	•••STUD - FUEL CELL INTERCONN CHECK VALVE		2
	2W1V40-52-31	••WASHER - PLAIN (NAA)		1
- 3	172-48107-3	••WASHER - FUEL CELL OUTER TO CENTRE WING INTERCONNECTOR CHECK VALVE	001-350	1
	172-48107-7	••WASHER - FUEL CELL OUTER TO CENTRE WING INTERCONNECTOR CHECK VALVE	351-	1
- 4	151-48123	••RETAINER ASSY - OUTER TO CENTRE WING FUEL CELL INTERCONNECTOR WASHER		1
- 5	AN503-8-4	••SCREW - (RETAINER ATTACHING)		2
	AN960D8L	••WASHER -		2
- 6	172-48110	••SPACER - FUEL CELL OUTER TO CENTRE WING INTERCONNECTOR CHECK VALVE		1
- 7	AN503-8-8	••SCREW - (SPACER ATTACHING)		1
	AN960D8L	••WASHER -		1
- 8	5-2400	••FLAPPER ASSY - (SWE) (INTERCONN CV)(PORT)	001-350	1
	5-2500	••FLAPPER ASSY - (SWE) (INTERCONN CV)(PORT)	351-	1
	5-2500	••FLAPPER ASSY - (SWE) (INTERCONN CV)(STBD)		1
- 9	AN253-2-106	••PIN -		1
	AF934-6	•PACKING - O-RING GASOLINE OR KEROSENE	001-350	4
	MS29513-11	•PACKING - O-RING HYDROCARBON FUEL RES	351-	4
	AN960-516	•WASHER -	001-350	4
	191-48106	•WASHER - FUEL CELL OUTER TO CENTRE WING INTERCONNECTOR SWIVEL	351-	4
	2W18-516L	•WASHER - PLAIN (NAA)	351-	4
	22FS524	•NUT - SELF-LOCKING (SPS)	001-350	4
	AN365-524	•NUT -	351-	4
-10	151-48135-11	•SPIDER ASSY - FORWARD FUSELAGE TO CENTRE WING FUEL CELL INTERCONNECTOR		2
-11	151-48109	••STUD - CHECK VALVE		2
-12	151-48117	•BOLT - FORWARD FUSELAGE TO CENTRE WING FUEL CELL INTERCONNECTOR MPI	001-200	2
	191-48117	•STUD - FORWARD FUSELAGE TO CENTRE WING FUEL CELL INTERCONNECTOR MPI	201-	2
	2W1AL22-36-125	•WASHER - PLAIN (NAA)		2
	AN365-524	•NUT -	201-	2
-13	151-48113	RING ASSY - OUTER TO CENTRE WING FUEL CELL INTERCONNECTOR (SEE FIG. 248)		REF

-000-

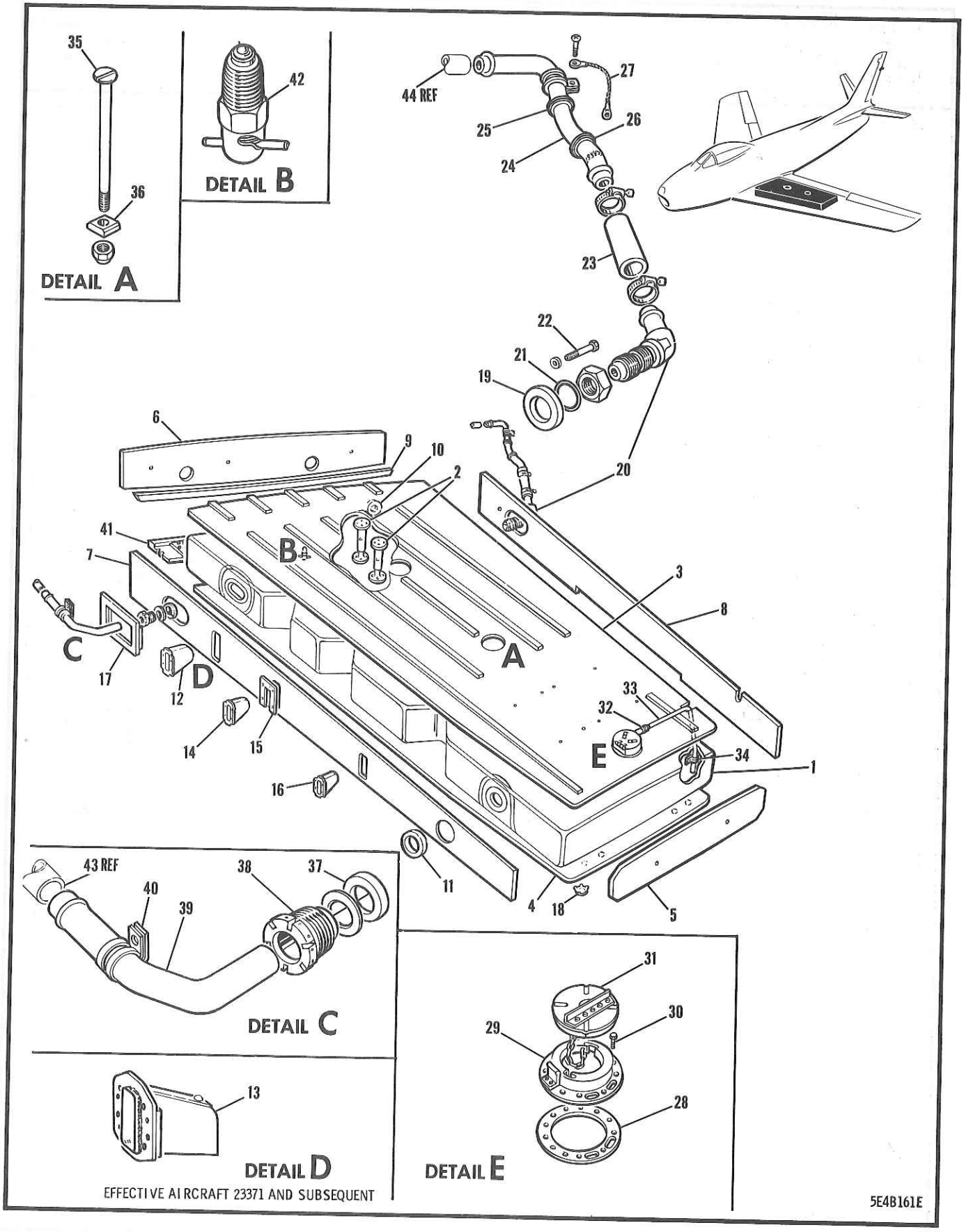

FIGURE 247 OUTER WING FUEL SYSTEM

FIGURE AND INDEX NUMBER	GROUP FUEL SYSTEM MAJOR ASSEMBLY OUTER WING FUEL SYSTEM PART NUMBER	1234567 NOMENCLATURE	CODE	UNITS PER ASSY
247 -	172-48014-51	FUEL SYSTEM EQUIP. INSTL - PORT OUTER WING (SEE SECTION 1)	001-370	NP
	172-48014-851	FUEL SYSTEM EQUIP. INSTL - PORT OUTER WING (AS PER EO 05-5E-6B/9)	371-	NP
	172-48014-52	FUEL SYSTEM EQUIP. INSTL - STBD OUTER WING (SEE SECTION 1)	001-370	NP
	172-48014-852	FUEL SYSTEM EQUIP. INSTL - STBD OUTER WING (AS PER EO 05-5E-6B/9)	371-	NP
	172-48202-101	.FUEL & PRESSURE EQUIP. INSTL - DROP TANK PORT WING (SEE FIG. 258)		REF
	13B-64010-1	.FUEL & PRESSURE EQUIP. INSTL - DROP TANK PORT WING (SEE FIG. 259)		REF
	172-48202-102	.FUEL & PRESSURE EQUIP. INSTL - DROP TANK STARBOARD WING (SEE FIG. 258)		REF
	13B-64010-2	.FUEL & PRESSURE EQUIP. INSTL - DROP TANK STARBOARD WING (SEE FIG. 259)		REF
- 1	172-48023-11	.CELL ASSY - PORT OUTER WING FUEL (SEE FIG. 248)		REF
	172-48023-12	.CELL ASSY - STARBOARD OUTER WING FUEL (SEE FIG. 248)		REF
- 2	172-48017	.SUPPORT ASSY - FUEL CELL WALL INTERNAL (INBOARD GAUGE)		2
	151-48018-1	.LINER INSTL - OUTER WING FUEL CELL (PORT SIDE)		NP
	151-48018-2	.LINER INSTL - OUTER WING FUEL CELL (STARBOARD SIDE)		NP
- 3	151-48008-1	..LINER ASSY - FUEL CELL UPPER (PORT SIDE)		1
	151-48008-2	..LINER ASSY - FUEL CELL UPPER (STBD SIDE)		1
- 4	151-48009-21	..LINER ASSY - FUEL CELL LOWER (PORT SIDE)		1
	151-48009-22	..LINER ASSY - FUEL CELL LOWER (STBD SIDE)		1
- 5	151-48005	..LINER - FUEL CELL OUTBOARD		1
- 6	151-48010	..LINER - FUEL CELL INBOARD		1
- 7	151-48006	..LINER - FUEL CELL FORWARD		1
	AN515-6-8	..SCREW -		1
	AN960-6L	..WASHER -		2
	AN365-632	..NUT -		1
- 8	151-48007	..LINER - FUEL CELL REAR		1
	AN515-6-14	..SCREW -		1
	AN515-6-14	..SCREW -	201-	2
	AN960-6L	..WASHER -		3
	AN365-632	..NUT -		1
	AN365-632	..NUT -	201-	2
	151-14013-1	.SEAL INSTL - PORT WING OUTBOARD PANEL	001-370	NP
	151-14013-801	.SEAL INSTL - PORT WING OUTBOARD PANEL (AS PER EO 05-5E-6B/9)	371-	NP
	151-14013-2	.SEAL INSTL - STARBOARD WING OUTBOARD PANEL	001-370	NP
	151-14013-802	.SEAL INSTL - STARBOARD WING OUTBOARD PANEL (AS PER EO 05-5E-6B/9)	371-	NP
- 9	151-48187	..SEAL - FUEL CELL & LOWER OUTBOARD SPLICE	001-530	1
	227-48187	..SEAL - FUEL CELL BAY LOWER BOLTING ANGLE FORWARD	531-	1
	227-48188	..SEAL - FUEL CELL BAY LOWER BOLTING ANGLE REAR	531-	1
-10	151-48192-11	..SEAL - FUEL TANK DRAIN		1
-11	151-48188	..SEAL ASSY - OUTBOARD LIQUIDOMETER FORWARD SPAR		1
-12	151-48190-961	..CUP - FUEL CELL SLAT TRACK SEAL	001-370	1
-13	202-14830-31	..CUP ASSY - LEADING EDGE SLAT TRACK SEAL (PORT WING)	371-	1
	202-14830-32	..CUP ASSY - LEADING EDGE SLAT TRACK SEAL (STARBOARD WING)	371-	1

FIGURE AND INDEX NUMBER	GROUP / MAJOR ASSEMBLY / PART NUMBER	FUEL SYSTEM / OUTER WING FUEL SYSTEM / 1234567 NOMENCLATURE	CODE	UNITS PER ASSY
247 -14	151-48190-963	••CUP - FUEL CELL SLAT TRACK SEAL	001-370	1
	202-14830-41	••CUP ASSY - LEADING EDGE SLAT TRACK SEAL (PORT WING)	371-	1
	202-14830-42	••CUP ASSY - LEADING EDGE SLAT TRACK SEAL (STARBOARD WING)	371-	1
-15	151-14013-953	••PLATE - SEAL FILLER (PORT WING)		1
	151-14013-954	••PLATE - SEAL FILLER (STARBOARD WING)		1
-16	151-48190-965	••CUP - FUEL CELL SLAT TRACK SEAL	001-370	1
	202-14830-51	••CUP ASSY - LEADING EDGE SLAT TRACK SEAL (PORT WING)	371-	1
	202-14830-52	••CUP ASSY - LEADING EDGE SLAT TRACK SEAL (STARBOARD WING)	371-	1
	172-48111	••SEAL - SLAT TRACK CUP		3
	AN960-10	••WASHER -		12
	AN960-10L	••WASHER -		AR
	AN365-1032	••NUT -		12
-17	151-48189	••SEAL ASSY - INBOARD TRANSMITTER		1
-18	SS-48143	••BUTTON - STANDARD TYPE PLUG (UCF)		8
-19	151-48185	••SEAL - FUEL CELL REAR VENT LINE		1
-20	AN839-16D	•ELBOW -		1
-21	MS29513-123	•PACKING - O-RING HYDROCARBON FUEL RES		1
	AN924-16D	•NUT -		1
	2W1AL17-34-64	•WASHER - PLAIN (NAA)		2
-22	AN4H12A	•BOLT -		2
-23	3H2-16-15	•HOSE - (NAA)		1
	AN737-46	•CLAMP -		2
-24	172-48810	•LINE ASSY - DIVE VENT (FUEL CELL TO WHEEL WELL PORT SIDE)		1
	172-48814-70	•LINE - DIVE VENT (FUEL CELL TO WHEEL WELL STARBOARD SIDE)		1
	AN742D16	•CLAMP -		1
-25	AN931-16-22	•GROMMET -		2
-26	AN931-16-22	•GROMMET - (STARBOARD WING)		1
-27	AN749-3-3	•JUMPER -		1
	AN515-8R8	•SCREW - (JUMPER ATTACHING)		1
	AN365-832	•NUT -		1
	AN520-10R8	•SCREW -		1
	AN365-1032	•NUT -		1
-28	117-48142-11	•GASKET - WING FUEL CELL FILLER ADAPTER		1
-29	170-48125	•ADAPTER ASSY - WING FUEL CELL FILLER CAP	001-660	1
	170-48125-11	•ADAPTER ASSY - WING FUEL CELL FILLER CAP	661-	1
-30	AN74-4	•BOLT - (ADAPTER ATTACHING)	001-660	12
	AN74-5	•BOLT - (ADAPTER ATTACHING)	661-	12
	AN960D416	•WASHER -		12
-31	151-48142-41	•CAP ASSY - FUEL CELL FILLER (CLEAN AS PER EO 05-5E-6A/279)		1
	AN416-1	•PIN -		1
-32	172-48814-59	•LINE - SCUPPER CUP DRAIN CONNECTOR	001-370	1
	172-48814-216	•LINE - SCUPPER CUP DRAIN CONNECTOR	371-	1
-33	172-48814-57	•LINE - FILLER CUP DRAIN (PORT WING)		1
	172-48814-58	•LINE - FILLER CUP DRAIN (STARBOARD WING)		1
-34	AN742D6C	•CLAMP -		1
	AN515-8R8	•SCREW -		1
-35	140-14222	•TIE-BOLT - TENSION		1
-36	140-14218	•PAD - LOWER SUPPORT		1
	AN365-624	•NUT -		1
	2W1-65-41-16	•WASHER - PLAIN (NAA)		1
-37	AF44A13841	•WASHER -		1
-38	151-48116	•GLAND-NUT - VENT LINE		1
	AN4H11A	•BOLT -		2
	AN960D416	•WASHER - (MAXIMUM 2)		AR
-39	172-48873	•LINE - CLIMB VENT (FUEL CELL TO HOSE PORT WING)		1

FIGURE AND INDEX NUMBER	GROUP FUEL SYSTEM MAJOR ASSEMBLY OUTER WING FUEL SYSTEM PART NUMBER	1234567 NOMENCLATURE	CODE	UNITS PER ASSY
247 -	172-48862	•LINE - CLIMB VENT (FUEL CELL TO HOSE STARBOARD WING)		1
-40	AN742D18CB	•CLAMP -	001-200	1
	AN742D18C	•CLAMP -	201-	1
	AN515-8R14	•SCREW -		1
	NAS43DD-3-24	•SPACER -		1
	AN365-832	•NUT -		1
-41	151-48180-1	•BLOCK - INBOARD LOWER SUPPORT (PORT WING)	001-530	1
	151-48180-801	•BLOCK - INBOARD LOWER SUPPORT (PORT WING)	531-	1
	151-48180-2	•BLOCK - INBOARD LOWER SUPPORT (STBD WING)	001-530	1
	151-48180-802	•BLOCK - INBOARD LOWER SUPPORT (STBD WING)	531-	1
-42	CCA-4900	•VALVE - DRAIN (CAD)		1
	172-48011	•CUP - SUMP DRAIN VALVE TIE-DOWN		1
-43	172-48831-303	LINE ASSY - FUEL (SEE FIG. 252)		REF
-44	172-48831-953	LINE ASSY - FUEL (SEE FIG. 252)		REF

-000-

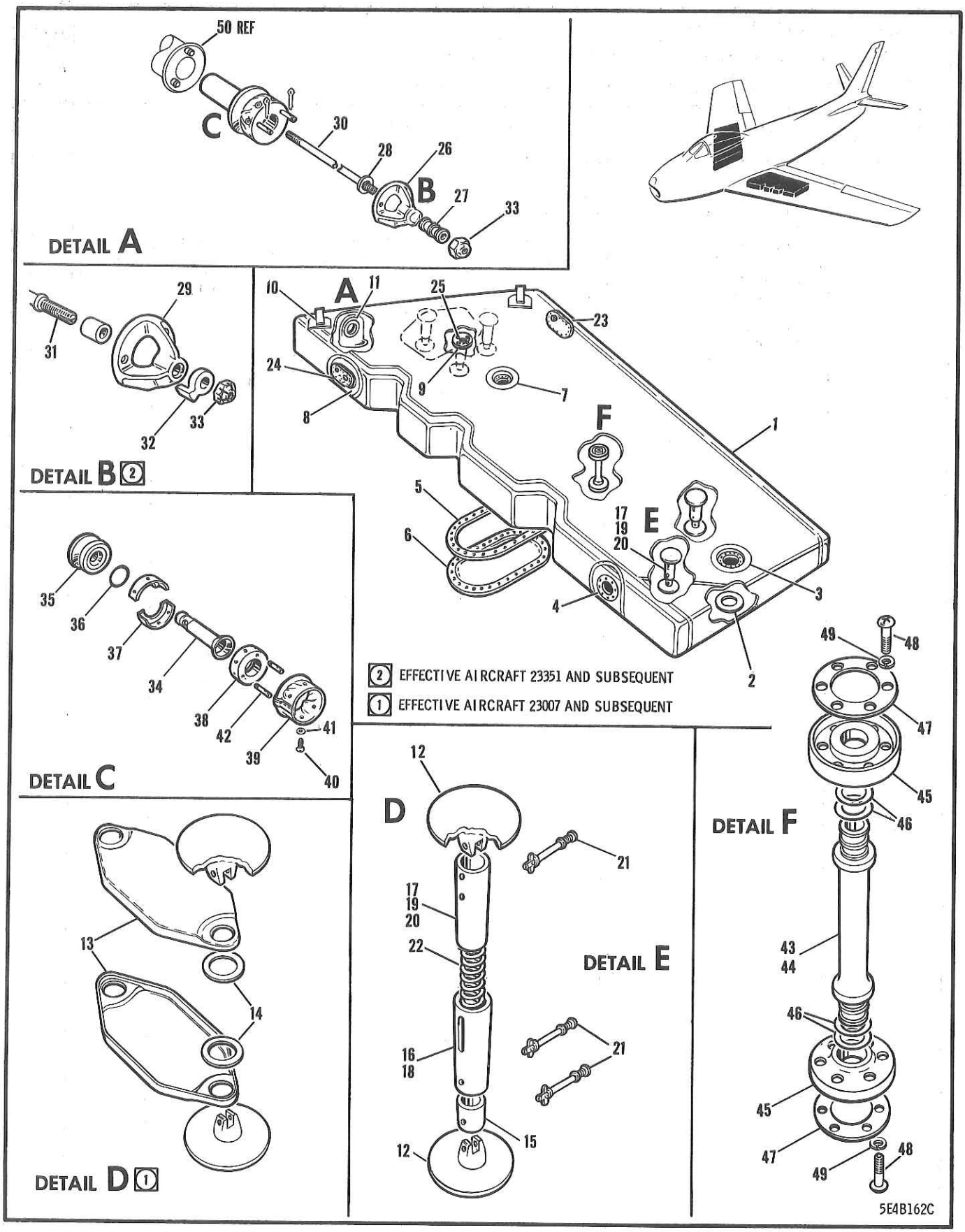

FIGURE 248 OUTER WING FUEL CELLS

FIGURE AND INDEX NUMBER	GROUP FUEL SYSTEM MAJOR ASSEMBLY OUTER WING FUEL CELLS PART NUMBER	1234567 NOMENCLATURE	CODE	UNITS PER ASSY
248 -	172-48023-11	CELL ASSY - OUTER WING FUEL (PORT SIDE) (SEE FIG. 247)	001-350	1
	172-48023-801	CELL ASSY - OUTER WING FUEL (PORT SIDE)	351-	1
	172-48023-12	CELL ASSY - OUTER WING FUEL (STBD SIDE) (SEE FIG. 247)	001-350	1
	172-48023-802	CELL ASSY - OUTER WING FUEL (STBD SIDE)	351-	1
	151-48003-701	•CELL ASSY - 56 IMP. (67.2 U.S.) GAL OUTER WING FUEL (PORT SIDE)	001-006	1
	151-48003-801	•CELL ASSY - 57 IMP. (68.4 U.S.) GAL OUTER WING FUEL (PORT SIDE)	007-	1
	151-48003-702	•CELL ASSY - 56 IMP. (67.2 U.S.) GAL OUTER WING FUEL (STARBOARD SIDE)	001-006	1
	151-48003-802	•CELL ASSY - 57 IMP. (68.4 U.S.) GAL OUTER WING FUEL (STARBOARD SIDE)	007-	1
- 1	151-48003-93	••CELL - 56 IMP. (67.2 U.S.) GAL OUTER WING FUEL (PORT SIDE)	001-006	1
		OR		
	169	••CELL - 56 IMP. (67.2 U.S.) GAL OUTER WING FUEL (PORT SIDE) (DOM)	001-006	
		OR		
	170	••CELL - 56 IMP. (67.2 U.S.) GAL OUTER WING FUEL (PORT SIDE) (DOM)	001-006	
	151-48003-103	••CELL - 57 IMP. (68.4 U.S.) GAL OUTER WING FUEL (PORT SIDE)	007-	1
		OR		
	170-21	••CELL - 57 IMP. (68.4 U.S.) GAL OUTER WING FUEL (PORT SIDE) (DOM)	007-	
	151-48003-94	••CELL - 56 IMP. (67.2 U.S.) GAL OUTER WING FUEL (STARBOARD SIDE)	001-006	1
		OR		
	169	••CELL - 56 IMP. (67.2 U.S.) GAL OUTER WING FUEL (STARBOARD SIDE) (DOM)	001-006	
		OR		
	170	••CELL - 56 IMP. (67.2 U.S.) GAL OUTER WING FUEL (STARBOARD SIDE) (DOM)	001-006	
	151-48003-104	••CELL - 57 IMP. (68.4 U.S.) GAL OUTER WING FUEL (STARBOARD SIDE)	007-	1
		OR		
	170-21	••CELL - 57 IMP. (68.4 U.S.) GAL OUTER WING FUEL (STARBOARD SIDE) (DOM)	007-	
				1
- 2	151-48003-35	••PAD - OUTER WING FUEL CELL		1
- 3	AN4130-27	••FITTING -		1
- 4	151-48003-19	••FITTING - OUTER WING FUEL CELL		1
- 5	151-48003-7	••FITTING - O/W FUEL CELL ACCESS DOOR		1
- 6	151-48003-8	••DOOR - OUTER WING FUEL CELL ACCESS		36
	AN4H4A	••BOLT - (DOOR TO TANK ATTACHING)		36
	AN960-416L	••WASHER -		4
- 7	AN4130-23	••FITTING -		2
- 8	AN4135-1	••FITTING -		1
- 9	AN4130-1	••FITTING -		2
-10	151-48003-12	••STRAP - OUTER WING FUEL CELL		1
	151-48003-23	••DECALCOMANIA - OUTER WING FUEL CELL	001-006	1
	151-48003-24	••DECALCOMANIA - OUTER WING FUEL CELL	007-	2
-11	151-48003-13	••FITTING - O/W FUEL CELL INTERCONNECTOR		8
-12	151-48003-14	••FITTING - O/W FUEL CELL SUPPORT POST		2
	151-48003-55	••SUPPORT - O/W FUEL CELL POST INBOARD	007-	2
-13	151-48003-57	••SUPPORT - O/W FUEL CELL POST OUTBOARD	007-	8
-14	151-48003-59	••WASHER - O/W FUEL CELL POST SUPPORT	007-	4
-15	151-48003-16	••POST - O/W FUEL CELL SUPPORT	001-006	4
	151-48003-37	••POST - O/W FUEL CELL SUPPORT	007-	

FIGURE AND INDEX NUMBER	GROUP FUEL SYSTEM MAJOR ASSEMBLY OUTER WING FUEL CELLS PART NUMBER	1234567 NOMENCLATURE	CODE	UNITS PER ASSY
248 -16	151-48003-18	••GUIDE - O/W FUEL CELL SUPPORT	001-006	2
	151-48003-43	••GUIDE - O/W FUEL CELL SUPPORT	007-	2
-17	151-48003-15	••POST - O/W FUEL CELL SUPPORT	001-006	2
-18	151-48003-20	••GUIDE - O/W FUEL CELL SUPPORT	001-006	2
	151-48003-45	••GUIDE - O/W FUEL CELL SUPPORT	007-	2
-19	151-48003-21	••POST - O/W FUEL CELL SUPPORT	001-006	1
	151-48003-39	••POST - O/W FUEL CELL SUPPORT	007-	2
-20	151-48003-22	••POST - O/W FUEL CELL SUPPORT	001-006	1
	151-48003-41	••POST - O/W FUEL CELL SUPPORT	007-	2
-21	FCA-16623	••PIN ASSY - (USR) (SUPPORT)		12
-22	172-48112-5	••SPRING - COMPRESSION	007-	2
	172-48112-3	••SPRING - COMPRESSION	007-	2
	151-48177-3	•SPRING - WING FUEL CELL SUPPORT POST	001-006	2
	151-48177-5	•SPRING - WING FUEL CELL SUPPORT POST	001-006	2
-23	172-48108	•ADAPTER - OUTER WING FUEL CELL DIVE VENT		1
	AN4H4A	•BOLT - (ADAPTER ATTACHING)		10
-24	151-48115-1	•ADAPTER - O/W FUEL CELL FORWARD VENT & GAUGE XRI (PORT SIDE)		1
	151-48115-2	•ADAPTER - O/W FUEL CELL FORWARD VENT & GAUGE XRI (STARBOARD SIDE)		1
	AN4H4A	•BOLT - (ADAPTER ATTACHING)		10
-25	151-48122	•ADAPTER - O/W FUEL CELL SUMP DRAIN		1
	AN4H4A	•BOLT - (ADAPTER ATTACHING)		4
	AN960D416	•WASHER -		4
	151-48112	•SPIDER ASSY - OUTER WING TO CENTRE WING FUEL CELL INTERCONNECTOR	001-350	2
	191-48112	•SPIDER ASSY - OUTER WING TO CENTRE WING FUEL CELL INTERCONNECTOR	351-	2
-26	151-48101	••SPIDER ASSY - OUTER WING TO CENTRE WING FUEL CELL INTERCONNECTOR	001-350	1
-27	RL33SB-9	•••LOCK-RING - STANDARD (ROS)	001-350	1
-28	RAD207SB-7.5	•••INSERT - COUNTERBORED LOCKED-IN (ROS)	001-350	1
-29	191-48101	••SPIDER - FUEL CELL INTERCONNECTOR	351-	1
-30	151-48105	••STUD - FUEL CELL INTERCONNECTOR MAIN	001-350	1
-31	191-48105	••STUD - FUEL CELL INTERCONNECTOR MAIN	351-	1
	NAS43DD-5-31	••SPACER -	351-	1
-32	191-48109	••NUT - FUEL CELL INTERCONN STUD SWIVEL	351-	1
-33	AN310-5	••NUT -		1
	AN380-2-2	••COTTER-PIN -		1
	151-48113	•RING ASSY - OUTER WING TO CENTRE WING FUEL CELL INTERCONNECTOR		2
-34	151-48176-3	••TUBE - FUEL CELL INTERCONNECTOR GUIDE		1
-35	151-48103	••RING - FUEL CELL INTERCONNECTOR ALIGNING		1
-36	AF934-140	••PACKING - O-RING GASOLINE OR KEROSENE	001-100	1
	MS29513-225	••PACKING - O-RING HYDROCARBON FUEL RES	101-	1
-37	151-48104	••SHELL - FUEL CELL INTERCONNECTOR RETAINER		2
-38	151-48102	••RING - FUEL CELL INTERCONNECTOR SEALING		1
-39	151-48118	••COVER ASSY - FUEL CELL INTERCONN DUST		1
-40	NAS200-440B4	••SCREW - (COVER TO RING ATTACHING)		6
-41	2W4-3	••WASHER - PLAIN (NAA)(UNDER HEAD)		6
-42	151-48108	••STUD - FUEL CELL INTERCONN SEALING RING		2
	AN380-2-2	•COTTER-PIN -		4
-43	140-14219-3	•TUBE - WOP FUEL CELL SUPPORT COMPRESSION	001-712	1
	227-14219-3	•TUBE - WOP FUEL CELL SUPPORT COMPRESSION	713-	1
-44	140-14219-5	•TUBE - WOP FUEL CELL SUPPORT COMPRESSION	001-712	1
	227-14219-5	•TUBE - WOP FUEL CELL SUPPORT COMPRESSION	713-	1
-45	151-14220	•FITTING - WOP FUEL CELL SUPPORT		4
-46	AF934-15	•PACKING - O-RING GASOLINE & KEROSENE	001-100	8
	MS29513-210	•PACKING - O-RING HYDROCARBON FUEL RES	101-	8
-47	172-48030	•RING - FUEL CELL SUPPORT FITTING WASHER		4

FIGURE AND INDEX NUMBER	GROUP FUEL SYSTEM MAJOR ASSEMBLY OUTER WING FUEL CELLS PART NUMBER	1234567 NOMENCLATURE	CODE	UNITS PER ASSY
248 -48	NAS222-9	•SCREW - (RING TO FITTING ATTACHING)		24
-49	AN935-416	•WASHER -		24
-50	172-48107-1	VALVE ASSY - FUEL CELL O/W TO CENTRE WING INTERCONN CHECK (SEE FIG. 246)		REF
		-000-		

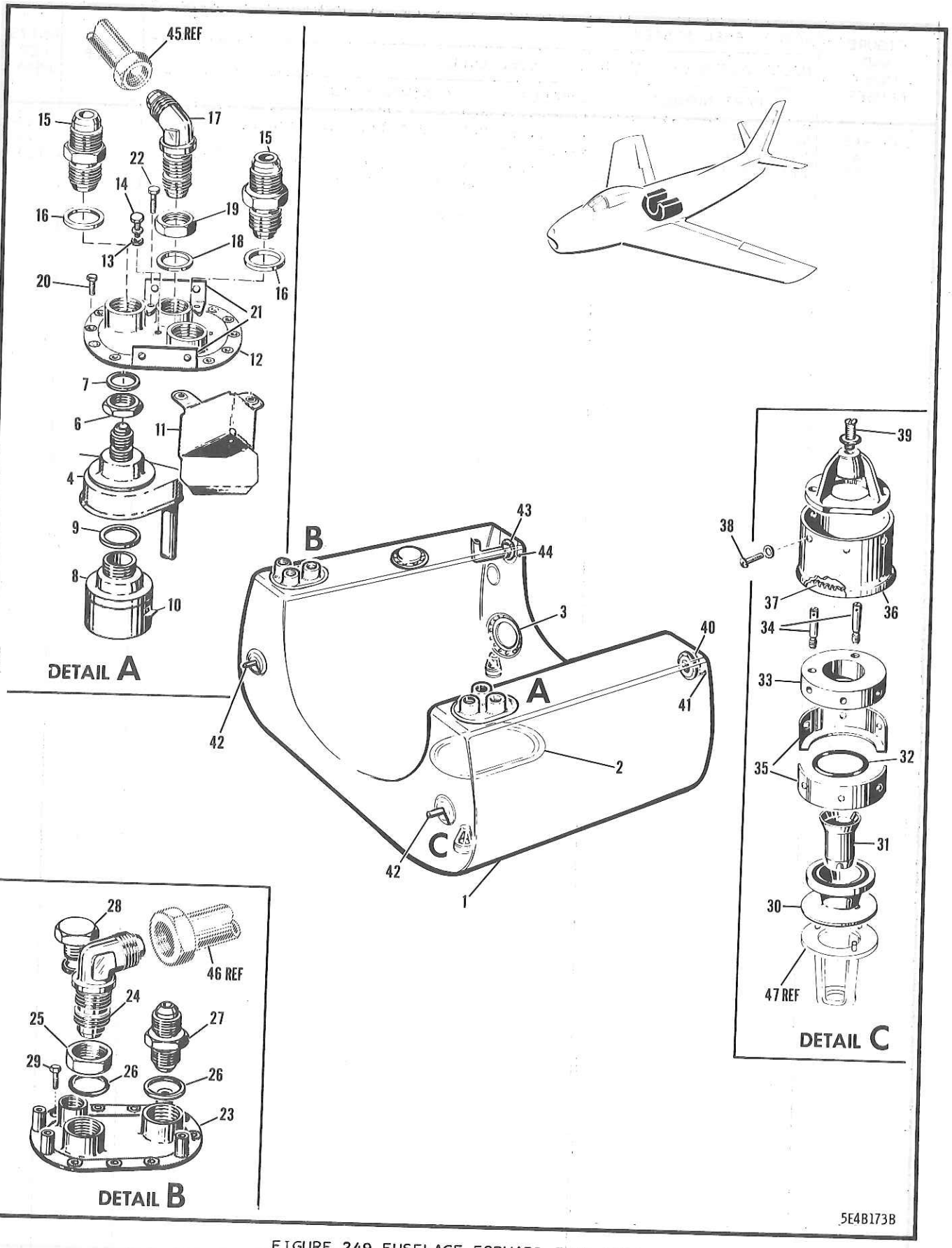

FIGURE 249 FUSELAGE FORWARD FUEL CELL

FIGURE AND INDEX NUMBER	GROUP FUEL SYSTEM MAJOR ASSEMBLY FUSELAGE FORWARD FUEL CELL PART NUMBER	1234567 NOMENCLATURE	CODE	UNITS PER ASSY
249 -	172-48052-11	CELL ASSY - FUSELAGE FORWARD FUEL COMPLETE (SEE FIG. 252)	001-661	1
	172-48052-801	CELL ASSY - FUSELAGE FORWARD FUEL COMPLETE	662-	1
	172-48032	•CELL ASSY - FUSELAGE FORWARD FUEL	001-661	1
	172-48032-801	•CELL ASSY - FUSELAGE FORWARD FUEL	662-	1
- 1	172-48032-3	••CELL - FUSELAGE FORWARD FUEL		1
- 2	172-48032-9	••DOOR - FUSELAGE FORWARD FUEL CELL		1
	AN4H4	••BOLT - (DOOR TO CELL ATTACHING)		36
		OR		
	AN74-3	••BOLT - (DOOR TO CELL ATTACHING)		36
	AN960-416L	••WASHER -		2
- 3	AN4134-1	••FITTING -		32
	AN4H4	••BOLT - (FITTING ATTACHING)		
		OR		
	AN74-3	••BOLT - (FITTING ATTACHING)		32
	AN960-416L	••WASHER -		1
	172-48032-10	••DECALCOMANIA - FUSELAGE FORWARD FUEL CELL		1
	172-48178	•ADAPTER ASSY - FUS FORWARD FUEL CELL VENT & FUEL LEVEL CTL VALVE (PORT SIDE)		
	134-48086	••COLLECTOR ASSY - FUEL LEVEL CONTROL VALVE		1
- 4	134-48084	•••COLLECTOR ASSY - FUEL LEVEL CTL VALVE		1
- 5	134-48085	•••ADAPTER - FUEL LEVEL VALVE		1
	134-48086-3	•••GASKET - FUEL LEVEL CONTROL VALVE		1
- 6	AN924-12D	••NUT -		1
- 7	AF934-107	••PACKING - O-RING GASOLINE OR KEROSENE	001-100	1
	MS29512-12	••GASKET - FUEL RESISTANT STRAIGHT THD TUBE FITTING BOSS	101-	1
- 8	K-1880-D	••VALVE - CONTROL (KCO) (FUEL LEVEL)		1
- 9	AF934-107	••PACKING - O-RING GASOLINE OR KEROSENE	001-100	1
	MS29512-12	••GASKET - FUEL RESISTANT STRAIGHT THD TUBE FITTING BOSS	101-	1
-10	2C16-4	••CLIP - CONDUIT (NAA)		1
-11	151-48209-950	••BAFFLE ASSY - DROP TANK LEVEL CONTROL VALVE FUEL		1
-12	172-48177	••ADAPTER - FUSELAGE FWD CELL FUEL LEVEL CONTROL VALVE & VENT (PORT SIDE)		1
-13	205-10	••LOCK-O-SEAL - AROMATIC FUEL (WFC)		2
	AN960D10L	••WASHER -		2
-14	AN3-5A	••BOLT -		2
-15	AN815-20D	••UNION -		2
-16	AF934-116	••PACKING - O-RING GASOLINE OR KEROSENE	001-100	2
	MS29512-20	••GASKET - FUEL RESISTANT STRAIGHT THD TUBE FITTING BOSS	101-	2
-17	AN837-16D	••ELBOW -		1
-18	AF934-111	••GASKET - O-RING GASOLINE OR KEROSENE	001-100	1
	MS29512-16	••GASKET - FUEL RESISTANT STRAIGHT THD TUBE FITTING BOSS	101-	1
-19	AN924-16D	••NUT -		1
-20	AN74-3	•BOLT - (ADAPTER ATTACHING)	001-200	12
	AN74-4	•BOLT - (ADAPTER ATTACHING)	201-	12
-21	172-48144	•SUPPORT - FUS FORWARD FUEL CELL LEVEL CTL VALVE OUTBOARD (PORT SIDE)		2
-22	AN4H5A	•BOLT -	001-370	4
	AN74-5	•BOLT -	371-	4
	151-48078-31	•ADAPTER ASSY - FUS FORWARD FUEL CELL VENT & FUEL LEVEL CTL VALVE (STBD SIDE)		1
-23	151-48077	••ADAPTER - FUS FORWARD FUEL CELL VENT & FUEL LEVEL CTL VALVE (X-RAY INSP)		1
-24	AN833-16D	••ELBOW -		1
-25	AN924-16D	••NUT -		1

FIGURE AND INDEX NUMBER	GROUP FUEL SYSTEM MAJOR ASSEMBLY FUSELAGE FORWARD FUEL CELL PART NUMBER	1234567 NOMENCLATURE	CODE	UNITS PER ASSY
249 -26	AF934-111	••PACKING - O-RING GASOLINE OR KEROSENE	001-100	2
	MS29512-16	••GASKET - FUEL RESISTANT STRAIGHT THD TUBE FITTING BOSS	101-	2
-27	AN815-16D	••UNION -		1
-28	AN814-12D	••PLUG -		1
	AF934-107	••PACKING -	001-746	1
	MS29512-12	••GASKET - FUEL RESISTANT STRAIGHT THD TUBE FITTING BOSS	001-100 101-746	1 1
-29	AN74-3	•BOLT - (ADAPTER TO CELL ATTACHING)	001-200	8
	AN74-4	•BOLT - (ADAPTER TO CELL ATTACHING)	201-	8
	151-48113-11	•RING ASSY - OUTER TO CENTRE WING FUEL CELL INTERCONNECTING		2
-30	151-48103	••RING - OUTER TO CTR/W FUEL CELL INTERCONN ALIGNING MPI		1
-31	151-48176-5	••TUBE - FUEL CELL INTERCONNECTING GUIDE		1
-32	AF934-140	••PACKING - O-RING GASOLINE OR KEROSENE	001-100	1
	MS29513-225	••PACKING - O-RING HYDROCARBON FUEL RES	101-	1
-33	151-48102	••RING - OUTER TO CENTRE WING FUEL CELL INTERCONN SEALING		1
-34	151-48108	••STUD - OUTER TO CTR/W FUEL CELL INTERCONN SEALING RING		2
-35	151-48104	••SHELL - OUTER TO CENTRE WING FUEL CELL INTERCONN RETAINER		2
	151-48118	••COVER ASSY - FUEL CELL INTERCONN DUST		1
-36	151-48118-3	•••COVER - FUEL CELL INTERCONNECTING DUST		1
-37	151-48119	•••SPRING - FUEL CELL INTERCONN DUST COVER		1
-38	NAS200-440B4	••SCREW - (RING TO COVER ATTACHING)		6
	2W4-3	••WASHER - PLAIN (NAA)		6
	AN380-2-2	•COTTER-PIN -		4
	151-48101-11	•SPIDER ASSY - OUTER TO CTR/W FUEL CELL INTERCONNECTING		2
-39	RAD207SB-7.5	••INSERT - COUNTERBORED LOCKED-IN (ROS)		1
	RL33SB-9	••LOCK-RING - STANDARD (ROS)		1
-40	172-48091	•ADAPTER - FUS FORWARD FUEL CELL CTR/W VENT		2
-41	AN74-3	•BOLT - (ADAPTER ATTACHING)	001-200	6
	AN74-4	•BOLT - (ADAPTER ATTACHING)	201-	6
-42	140-48098-3	•STUD - FUEL CELL HANGER		2
-43	172-48058	•ADAPTER ASSY - CENTRE WING TO FUS FORWARD FUEL CELL VENT		1
-44	AN74-3	•BOLT - (ADAPTER ATTACHING)	001-200	3
	AN74-4	•BOLT - (ADAPTER ATTACHING)	201-	3
-45	172-48854	LINE ASSY - FUEL (SEE FIG. 252)		REF
-46	172-48831-88	LINE ASSY - FUEL CELL VENT (SEE FIG. 252)		REF
-47	151-48135-11	SPIDER ASSY - FWD FUS TO CTR/W FUEL CELL INTERCONN (SEE FIG. 246)		REF

-000-

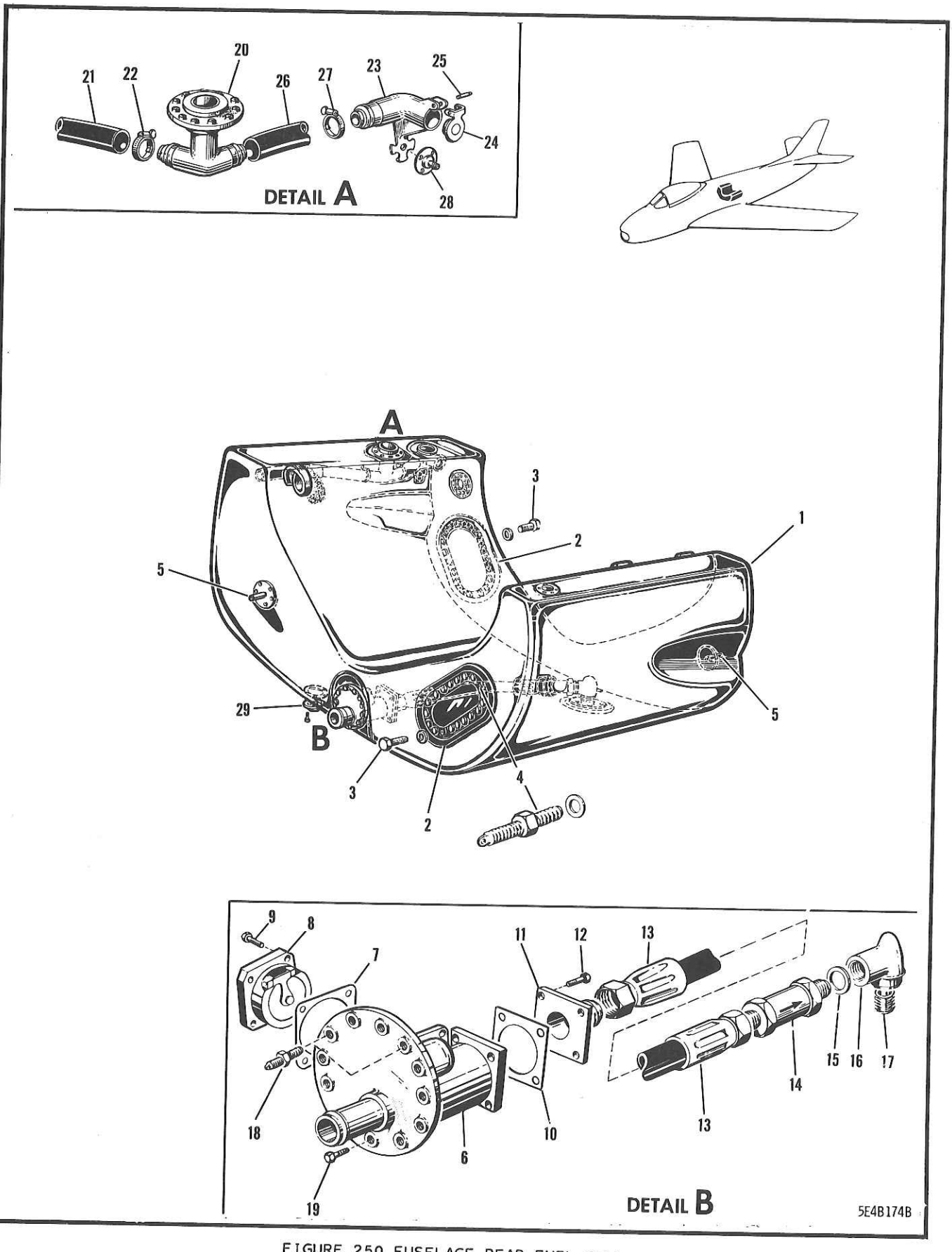

FIGURE 250 FUSELAGE REAR FUEL CELL

FIGURE AND INDEX NUMBER	GROUP FUEL SYSTEM MAJOR ASSEMBLY FUSELAGE REAR FUEL CELL PART NUMBER	1234567 NOMENCLATURE	CODE	UNITS PER ASSY
250 -	13A-64002	CELL ASSY - FUSELAGE REAR FUEL (SEE FIG. 253)		1
	13A-64003	•CELL ASSY - FUSELAGE REAR FUEL		1
- 1	13A-64003-3	••CELL - FUSELAGE REAR FUEL		2
- 2	AN4131-1	••FITTING -		44
- 3	AN74-3	••BOLT - (FITTING TO CELL ATTACHING)		44
	AN960-416L	••WASHER -		4
- 4	117-48289	•STUD - SELF-SEALING FUEL CELL		4
	AN960-416L	•WASHER -		2
- 5	140-48098-3	•STUD - FUSELAGE FUEL CELL HANGER		1
	151-48059-11	•INTERCONNECTOR & CHECK VALVE ASSY - CENTRE WING CELL TO FUSELAGE REAR CELL		1
- 6	140-48054	••BODY - FUSELAGE REAR CELL TO CTR/W CELL INTERCONNECTOR & CHECK VALVE		1
- 7	134-48082	••GASKET - AUXILIARY TO MAIN TANK INTERCONN CHECK VALVE ADAPTER		1
- 8	1111-518038	••ADAPTER ASSY - (PAC) (TANK INTERCONN CV)		1
- 9	AN502-10-8	••SCREW - (ADAPTER TO BODY ATTACHING)		4
-10	134-48081	••GASKET - AUXILIARY TO MAIN TANK INTERCONN CHECK VALVE NIPPLE		1
-11	152-48083	••ADAPTER - FUSELAGE REAR CELL TO CTR/W CELL INTERCONNECTOR & CHECK VALVE		1
-12	AN502-10-8	••SCREW - (ADAPTER TO BODY ATTACHING)		4
-13	AN6264-16D-17-1/4	•HOSE ASSY - DETACHABLE END SWIVEL TYPE FTG		1
-14	1-1045-76	•VALVE - SWING CHECK (PAC)		1
		OR		
	K1339-16-1	•VALVE - SWING CHECK (KCO)		
-15	MS29512-16	•GASKET - FUEL RES STR THD TUBE FTG BOSS		1
		OR		
	AF934-111	•GASKET - FUEL RES STR THD TUBE FTG BOSS		
-16	151-48025	•ADAPTER - FUEL BOOSTER PUMP OUTLET		1
-17	1185-6C-9/16	••INSERT - NATIONAL COARSE THREAD (HCL)		1
-18	151-48051	•STUD - FUSELAGE REAR FUEL CELL INTERCONN & CHECK VALVE TIE-DOWN		2
-19	AN4H4A	•BOLT - (INTERCONNECTOR TO CELL ATTACHING)		8
-20	13-64031	•ADAPTER ASSY - FUSELAGE REAR FUEL CELL INTERCONN VENT (XRI)		1
-21	3H2-16-70	•HOSE - (NAA)		1
-22	AN748-46	•CLAMP -		1
	AN4H4A	•BOLT -		4
	13A-64018	•VALVE ASSY - FUSELAGE REAR CELL VENT(STBD)		1
-23	13A-64019	••ADAPTER - FUSELAGE REAR CELL VENT (STBD)		1
-24	140-48059-8	••VALVE ASSY - FUSELAGE REAR CELL INTERCONN		1
-25	13A-64018-3	••PIN - FUEL CELL VENT VALVE		1
	AN310C4	•NUT -		1
	AN380C2-3	•COTTER-PIN -		1
-26	3H2-16-33	•HOSE - (NAA)		1
-27	AN748-46	•CLAMP -		2
-28	13A-64020	•ADAPTER - FUSELAGE REAR FUEL CELL VENT		1
	AN4H4A	•BOLT -		4
-29	151-48122	•ADAPTER - CENTRE WING FUEL CELL SUMP DRAIN		1
	AN4H4A	•BOLT - (ADAPTER CELL ATTACHING)		4

-000-

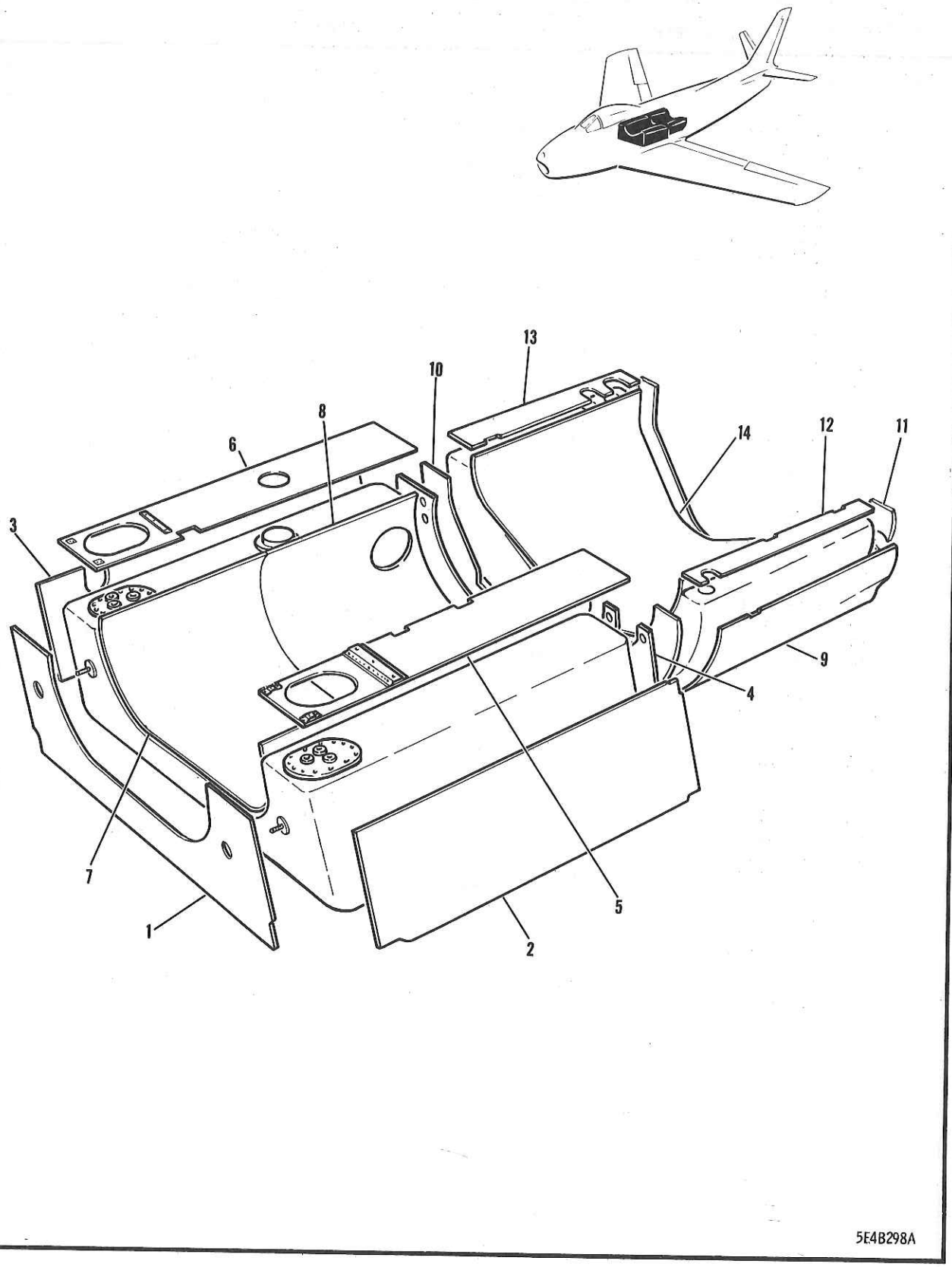

FIGURE 251 FUSELAGE FUEL CELL LINERS

FIGURE AND INDEX NUMBER	GROUP FUEL SYSTEM MAJOR ASSEMBLY FUSELAGE FUEL CELL LINERS PART NUMBER	1234567 NOMENCLATURE	CODE	UNITS PER ASSY
251 -	13A-64004	LINER INSTL - FUSELAGE FUEL CELL (SEE FIG. 252)		NP
- 1	151-48035	.LINER - FUSELAGE FORWARD FUEL CELL FORWARD		1
- 2	172-48047-1	.LINER - FUSELAGE FORWARD FUEL CELL SIDE LH		1
- 3	172-48047-2	.LINER - FUSELAGE FORWARD FUEL CELL SIDE RH		1
- 4	172-48139	.LINER ASSY - FUSELAGE FWD FUEL CELL REAR		1
	172-48136	..LINER - FUSELAGE FORWARD FUEL CELL REAR		1
- 5	172-48137	.LINER ASSY - FUSELAGE FWD FUEL CELL UP. LH		1
	151-48037-11	..LINER - FUSELAGE FORWARD FUEL CELL UP. LH		1
- 6	172-48138	.LINER ASSY - FUSELAGE FWD FUEL CELL UP. RH		1
	151-48038	..LINER - FUSELAGE FORWARD FUEL CELL UP. RH		1
- 7	151-48049	.LINER - FUSELAGE FWD FUEL CELL UPPER FWD		1
- 8	151-48039-11	.LINER - FUSELAGE FWD FUEL CELL UPPER REAR		1
- 9	13-64051	.LINER - FUSELAGE REAR FUEL CELL LOWER		1
		OR		
	13A-64051-800	.LINER - FUSELAGE REAR FUEL CELL LOWER		
-10	13A-64006-3	.LINER - FUSELAGE REAR FUEL CELL FORWARD LH		1
	13A-64006-5	.LINER - FUSELAGE REAR FUEL CELL FORWARD RH		1
-11	13A-64007-3	.LINER - FUSELAGE REAR FUEL CELL REAR LH		1
	13A-64007-5	.LINER - FUSELAGE REAR FUEL CELL REAR RH		1
-12	13-64048	.LINER - FUSELAGE REAR FUEL CELL UPPER LH		1
-13	13A-64008	.LINER - FUSELAGE REAR FUEL CELL UPPER RH		1
-14	13A-64005	.LINER - FUSELAGE REAR FUEL CELL UPPER		1
		-000-		

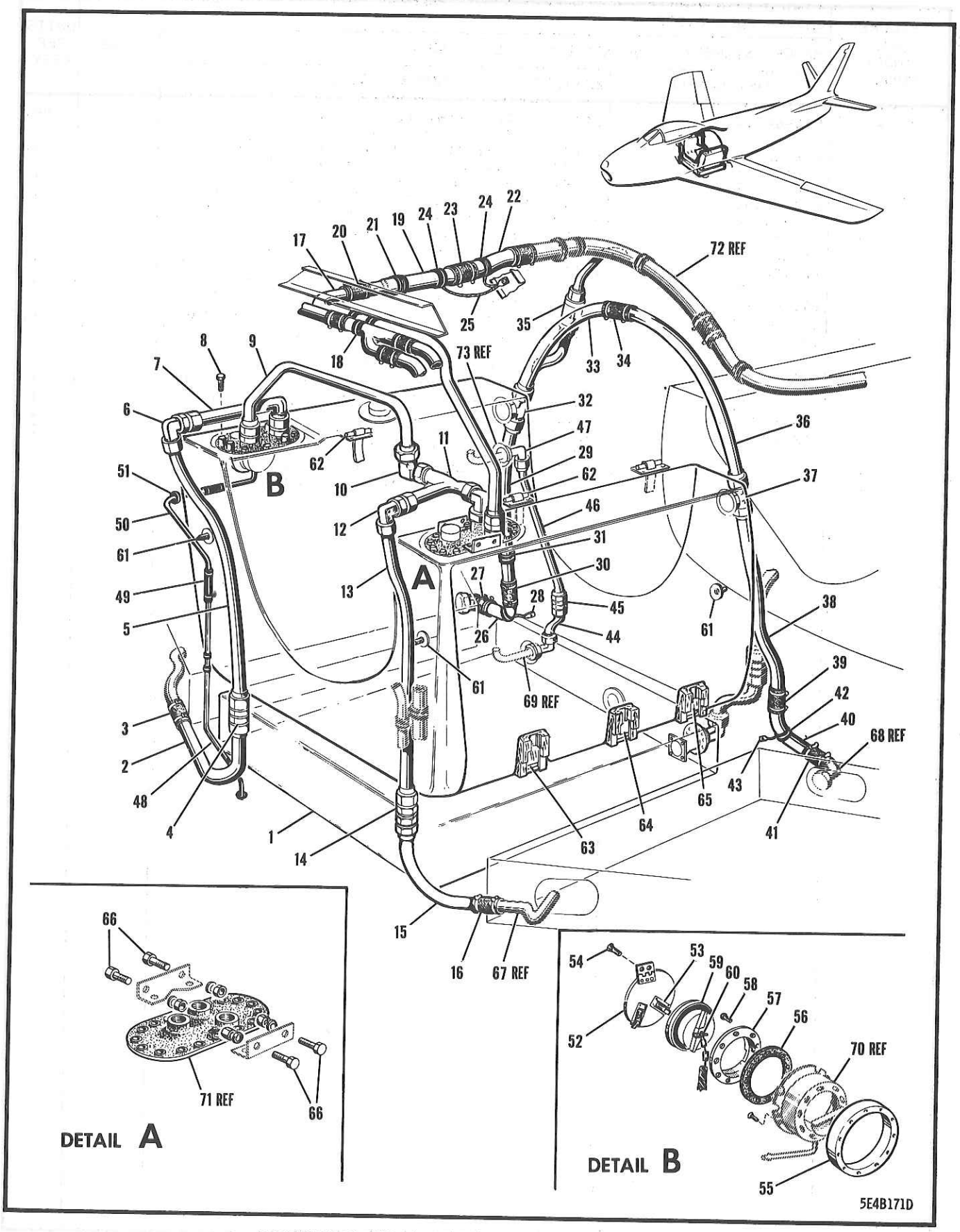

FIGURE 252 FUSELAGE FORWARD TANK FUEL SYSTEM

FIGURE AND INDEX NUMBER	GROUP FUEL SYSTEM MAJOR ASSEMBLY FUSELAGE FORWARD TANK FUEL SYSTEM PART NUMBER	1234567 NOMENCLATURE	CODE	UNITS PER ASSY
252 -	13A-64001	FUEL SYSTEM EQUIP. INSTL - FUSELAGE (SEE SECTION 5)		NP
	172-48203-51	•FUEL & PRESSURE EQUIP. INSTL - DROP TANK FUSELAGE (SEE FIG. 257)		REF
	13A-64004	•LINER INSTL - FUSELAGE FUEL CELL (SEE FIG. 251)		REF
- 1	172-48052-11	•CELL ASSY - FUSELAGE FORWARD FUEL (SEE FIG. 249)		REF
- 2	172-48831-304	•LINE ASSY - WING OUTER PANEL CELL TO FUS FORWARD CELL FORWARD INTERCONNECTING HOSE TO GUN-BAY FLOOR CLIMB VENT RH		1
- 3	3H2-16-15	•HOSE - (NAA)		1
	AN737TW46	•CLAMP -		2
- 4	AN832-16D	•UNION -		1
	2W1AL85-52-51	•WASHER - PLAIN (NAA)		1
	AN924-16D	•NUT -		1
- 5	172-48831-94	•LINE ASSY - WOP CELL TO FUS FWD CELL FWD INTERCONN BHD TO GUN-BAY FLOOR RH		1
- 6	AN833-16D	•ELBOW -		1
	AN960D2116	•WASHER -		1
	AN924-16D	•NUT -		1
- 7	172-48831-54	•LINE ASSY - WOP CELL TO FUS FWD CELL FWD INTERCONNECTING BHD TO CELL RH VENT		1
- 8	AN4H13A	•BOLT - (ADAPTER TO CELL ATTACHING)		4
	2W14	•WASHER - ECCENTRIC (NAA)		4
- 9	172-48831-88	•LINE ASSY - FUS FWD CELL CROSS-OVER VENT	001-210	1
	172-48831-959	•LINE ASSY - FUS FWD CELL CROSS-OVER VENT	211-	1
-10	AN821-16D	•ELBOW -		1
-11	172-48854	•LINE ASSY - OUTER WING FUEL CELL VENT FUS STA 126 TO FORWARD FUSELAGE CELL		1
-12	AN833-16D	•ELBOW -		1
	AN960D2116	•WASHER -		1
	AN924-16D	•NUT -		1
-13	172-48831-307	•LINE ASSY - WOP CELL TO FUS FWD CELL FWD INTERCONN BHD TO GUN-BAY FLOOR LH		1
-14	AN832-16D	•UNION -		1
	AN924-16D	•NUT -		1
-15	172-48831-303	•LINE ASSY - WING OUTER PANEL CELL TO FUS FORWARD CELL FORWARD INTERCONNECTING HOSE TO GUN-BAY FLOOR CLIMB VENT LH		1
-16	3H2-16-15	•HOSE - (NAA)		1
	AN737TW46	•CLAMP -		2
-17	172-48831-100	•LINE ASSY - FUSELAGE FORWARD CELL FUEL LEVEL CONTROL VALVE TO MAIN VENT		1
-18	AN742D22CB	•CLAMP -		3
	AN520-10R10	•SCREW -		1
	AN365-1032	•NUT -		1
	AN520-10R18	•SCREW -		1
	NAS43DD-3-32	•SPACER -	001-598	1
	13A-64001-25	•SPACER - FUSELAGE FORWARD FUEL TANK	599-	1
-19	172-48868	•LINE - FWD CELL MAIN FUEL VENT STA 135-155		1
-20	3H2-20-15	•HOSE - (NAA)		1
	AN737TW58	•CLAMP -		2
-21	AN742D26CB	•CLAMP -		1
	AN520-10R10	•SCREW -		1
	AN365-1032	•NUT -		1
-22	172-48831-185	•LINE - FWD CELL MAIN FUEL VENT STA 158-174		1
-23	3H2-24-15	•HOSE - (NAA)		1
	AN737TW66	•CLAMP -		2
-24	AN735D24	•CLAMP -		2

FIGURE AND INDEX NUMBER	GROUP FUEL SYSTEM MAJOR ASSEMBLY FUSELAGE FORWARD TANK FUEL SYSTEM PART NUMBER	1234567 NOMENCLATURE	CODE	UNITS PER ASSY
252 -25	AN749-3-6	•JUMPER -		2
	AN520-10R10	•SCREW -		2
	AN520-10R12	•SCREW -		1
	AN365-1032	•NUT -		3
-26	172-48831-951	•LINE - WING VENT TO FUSELAGE FORWARD CELL REAR VENT (STARBOARD SIDE)		1
-27	3H2-16-15	•HOSE - (NAA)		1
	AN737TW46	•CLAMP -		2
	AN742D18CB	•CLAMP -		1
-28	AN749-3-6	•JUMPER -		1
	AN515-8R8	•SCREW -		2
	AN365-832	•NUT -		2
-29	172-48831-98	•LINE ASSY - FUSELAGE FWD CELL DIVE VENT INLET TO WING OUTER PANEL CELL RH		1
-30	3H2-16-15	•HOSE - (NAA)		1
	AN737TW46	•CLAMP -		2
-31	AN931A16S22	•GROMMET -		1
-32	AN834-16D	•TEE -		1
	AF934-111	•PACKING - O-RING GASOLINE OR KEROSENE		1
	AN924-16D	•NUT -		1
	AN4H7A	•BOLT -		3
-33	13A-64075	•LINE ASSY - FUSELAGE FWD CELL DIVE VENT RH		1
-34	3H2-16-15	•HOSE - (NAA)		1
	AN737TW46	•CLAMP -		2
	AN735D16	•CLAMP -	101-	1
	AN520-10R8	•SCREW -	101-	1
-35	1-1045-76	•VALVE - SWING CHECK (PAC) OR		1
	K-1339-16-1	•VALVE - SWING CHECK (KCO)		
-36	13A-64028-5	•LINE ASSY - FUS FWD CELL DIVE VENT TEE TO FORWARD FUS CELL INLET (PORT SIDE)		1
-37	AN834-16D	•TEE -		1
	AF934-111	•PACKING - O-RING GASOLINE OR KEROSENE		1
	AN924-16D	•NUT -		1
	AN4H6A	•BOLT -		3
	AN960D416L	•WASHER -		3
-38	172-48831-97	•LINE ASSY - FUSELAGE FWD CELL DIVE VENT INLET TO WING OUTER PANEL CELL LH		1
-39	3H2-16-15	•HOSE - (NAA)		1
	AN737TW46	•CLAMP -		2
	AN931A16S22	•GROMMET -		1
-40	172-48831-953	•LINE - WING VENT TO FUSELAGE FORWARD CELL REAR VENT (PORT SIDE)		1
-41	3H2-16-15	•HOSE - (NAA)		1
	AN737TW46	•CLAMP -		2
-42	AN742D18CB	•CLAMP -		1
-43	AN749-3-6	•JUMPER -		1
	AN515-8R8	•SCREW -		2
	AN365-832	•NUT -		2
-44	172-48861	•LINE ASSY - CENTRE WING FUEL CELL TO FUS FORWARD CELL FILLER VENT LOWER		1
-45	AN832-12D	•UNION -		1
	AN960D1716	•WASHER -		1
	AN924-12D	•NUT -		1
-46	172-48831-31	•LINE ASSY - CENTRE WING CELL TO FUSELAGE FORWARD CELL FILLER VENT UPPER		1
-47	AN833-12D	•ELBOW -		1
	AF934-107	•PACKING - O-RING GASOLINE OR KEROSENE		1
	AN924-12D	•NUT -		1
	AN4H10A	•BOLT -		3

FIGURE AND INDEX NUMBER	GROUP FUEL SYSTEM MAJOR ASSEMBLY FUSELAGE FORWARD TANK FUEL SYSTEM PART NUMBER	1234567 NOMENCLATURE	CODE	UNITS PER ASSY
252 -	AN960D416	•WASHER -		3
-48	172-48831-131	•LINE - FUSELAGE FORWARD CELL FUEL FILLER SCUPPER CUP DRAIN TO OUTLET LOWER		1
	AN931-4S7	•GROMMET -		2
	AN742D6CB	•CLAMP -		1
	758-4	•CLIP - INTEGRALLY BONDED SINGLE-HOLE LUG TYPE SUPPORT (ADE)		1
	AN515-8R8	•SCREW -		3
	AN960-10L	•WASHER -		3
	AN365-832	•NUT -		3
-49	3H2L4-15	•HOSE - (NAA)		2
	AN737TW22	•CLAMP -		4
-50	172-48831-130	•LINE - FUSELAGE FORWARD CELL FUEL FILLER SCUPPER CUP DRAIN TO OUTLET UPPER		1
-51	AN931-4S7	•GROMMET -		1
	AN931B4-7	•GROMMET -		1
-52	151-48061-11	•DOOR ASSY - FUSELAGE FWD FUEL CELL FILLER		1
	151-48074	••HINGE ASSY - FUSELAGE FORWARD FUEL CELL FILLER DOOR		1
-53	H5000-2-091-218	••LATCH ASSY - FLUSH (HAS)		2
-54	AN509-10R11	•SCREW - (DOOR ATTACHING)		2
-55	13A-64001-17	•GASKET - (BETWEEN FILLER CUP & TANK) (AS PER EO 05-5E-6A/102)	001-578	AR
		OR		
	13A-64001-19	•GASKET - (BETWEEN FILLER CUP & TANK) (AS PER EO 05-5E-6A/102)	001-578	
-56	117-48142-11	•GASKET - WING FUEL CELL FILLER ADAPTER	001-578	1
	117-48142-11	•GASKET - WING FUEL CELL FILLER ADAPTER	579-	2
-57	170-48166-11	•ADAPTER ASSY - FUSELAGE FUEL FILLER CAP		1
-58	AN74-4	•BOLT -	001-578	12
	13A-64001-21	•SPACER - FORWARD FUEL CELL FILLER ADPT	579-	1
	13A-64001-23	•SPACER - FORWARD FUEL CELL FILLER ADPT	579-	1
	AN74-12	•BOLT -	579-	12
	AN74-7	•BOLT -	579-	12
-59	151-48142-51	•CAP ASSY - FUEL CELL FILLER (CLEAN AS PER EO 05-5E-6A/279)		1
-60	AN416-1	•PIN -		1
	172-48831-154	•LINE - FUEL CELL FILLER CAP RETAINER CHAIN		1
-61	2W14	•WASHER - ECCENTRIC (NAA)		3
	AN365-428	•NUT -		3
-62	117-48116	•TUBE - FUSELAGE FUEL CELL TIE-DOWN		3
-63	172-48097	•BLOCK - FWD FUEL CELL FRAME FILLER STA 145		2
-64	172-48098	•BLOCK - FWD FUEL CELL FRAME FILLER STA 156		2
-65	172-48099	•BLOCK - FWD FUEL CELL FRAME FILLER STA 167		2
-66	AN3-4A	•BOLT - (SUPPORT ATTACHING)		4
	AN960D10L	•WASHER -		4
	AN365-1032	•NUT -		4
-67	172-48873	LINE - CLIMB VENT (SEE FIG. 247)		REF
-68	172-48810	LINE ASSY - DIVE VENT (SEE FIG. 247)		REF
-69	172-48183	ADAPTER ASSY - VENT LINE (SEE FIG. 244)		REF
-70	151-48073-11	CUP ASSY - FUEL CELL FILLER (SEE SECTION 3)		REF
-71	172-48178	ADAPTER ASSY - LEVEL VALVE (SEE FIG. 249)		REF
-72	13A-64074	LINE ASSY - MAIN FUEL VENT (SEE FIG. 253)		REF
-73	172-48058	ADAPTER ASSY - FUEL CELL VENT (SEE FIG.249)		REF
		(CONTINUED SEE FIG. 253)		

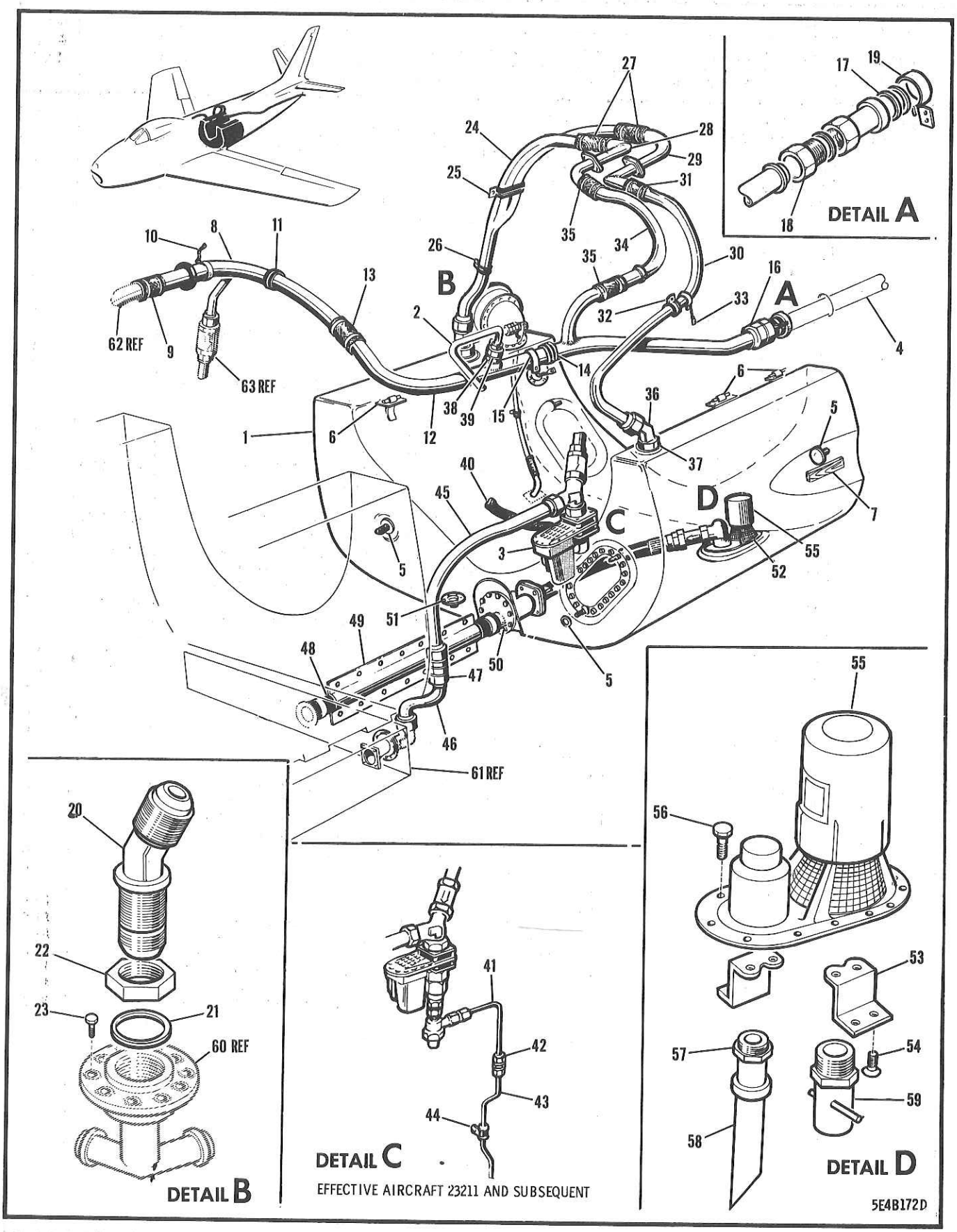

FIGURE 253 FUSELAGE REAR TANK FUEL SYSTEM

FIGURE AND INDEX NUMBER	GROUP FUEL SYSTEM MAJOR ASSEMBLY FUSELAGE REAR TANK FUEL SYSTEM PART NUMBER	1234567 NOMENCLATURE	CODE	UNITS PER ASSY
253 -	13A-64001	FUEL SYS EQUIP. INSTL - FUS (SEE FIG. 252)		REF
- 1	13A-64002	•CELL ASSY - FUSELAGE REAR FUEL COMPLETE (SEE FIG. 250)		REF
- 2	13A-64021	•DE-ICING SYSTEM EQUIP. INSTL - FUEL FILTER ALCOHOL (SEE SECTION 15)		REF
- 3	13A-64085	•VALVE INSTL - FUEL SHUT-OFF (SEE FIG. 256)		REF
- 4	13A-64030	•VENT INSTL - FUEL (REAR OF FUS STA 225) (SEE FIG. 255)		4
- 5	2W14	•WASHER - ECCENTRIC (NAA)		4
	AN365-428	•NUT -		3
- 6	117-48116	•TUBE - FUSELAGE FUEL CELL TIE-DOWN		2
- 7	151-48095	•BLOCK - FUS REAR FUEL CELL LONGN FILLER		1
- 8	13A-64074	•LINE ASSY - MAIN FUEL VENT FUS STA 170-190		1
- 9	3H2-24-15	•HOSE - (NAA)		2
	AN737TW66	•CLAMP -		1
	AN742-24C	•CLAMP -		1
	AN742D24	•CLAMP -		1
-10	AN749-3-3	•JUMPER -		3
	AN520-10R8	•SCREW -		1
	AN960-10L	•WASHER -		3
	AN365-1032	•NUT -		2
-11	AN931A24S28	•GROMMET -		1
-12	13A-64073	•LINE ASSY - MAIN FUEL VENT FUS STA 190-230	001-370	1
	13A-64073-801	•LINE ASSY - MAIN FUEL VENT FUS STA 190-230	371-	1
-13	3H2-24-15	•HOSE - (NAA)		1
	AN737TW66	•CLAMP -		2
-14	AN742D26CB	•CLAMP -		2
	AN742D24	•CLAMP -		1
-15	AN749-3-3	•JUMPER -		1
	AN520-10R8	•SCREW -		4
	AN365-1032	•NUT -		4
	13-64034	•FITTING ASSY - FUEL VENT JUNCTION SEALING		1
-16	13-64034-3	••FITTING - FUEL VENT JUNCTION SEALING		1
-17	AN6227B28	••PACKING -		3
-18	13-64035	•GLAND-NUT - FUEL VENT JUNCTION SEALING		1
-19	796-36	•CLIP - HEAVY DUTY MOUNTING LUG TYPE (ADE)		1
	AN520-10R8	•SCREW -		1
	AN365-1032	•NUT -		1
-20	13A-64117	•ELBOW - FUSELAGE REAR FUEL CELL VENT FTG		1
-21	AF934-11L	•PACKING - O-RING GASOLINE OR KEROSENE		1
-22	AN924-16D	•NUT -		1
-23	AN4H7A	•BOLT -		4
	AN960D416L	•WASHER -		4
-24	13A-64072	•LINE ASSY - FUSELAGE REAR FUEL CELL INTERCONNECTING VENT		1
	13A-64001-7	•CUSHION - VENT LINE CLIP		1
-25	13A-64001-3	•CLIP - VENT LINE SUPPORTING		1
	AN520-10R12	•SCREW -		2
	AN960-10	•WASHER -		2
-26	AN742D18CB	•CLAMP -		1
	AN520-10R8	•SCREW -		1
	AN365-1032	•NUT -		1
-27	3H2-16-15	•HOSE - (NAA)		2
	AN737TW46	•CLAMP -		4
-28	13A-64077	•LINE ASSY - REAR FUEL CELL INTERCONN VENT THROUGH FRAME STA 226 RH	001-100	1
	13A-64077-11	•LINE ASSY - REAR FUEL CELL INTERCONN VENT THROUGH FRAME STA 226 RH	101-	1
-29	13A-64078	•LINE ASSY - REAR FUEL CELL CROSS-OVER VENT THROUGH FRAME STA 226 LH		1

FIGURE AND INDEX NUMBER	GROUP FUEL SYSTEM MAJOR ASSEMBLY FUSELAGE REAR TANK FUEL SYSTEM PART NUMBER	1234567 NOMENCLATURE	CODE	UNITS PER ASSY
253 -	AN3-6A	•BOLT -		4
	AN960-10L	•WASHER -		4
	AN365-1032	•NUT -		4
-30	13A-64028-3	•LINE ASSY - FUSELAGE REAR FUEL CELL INTERCONNECTING VENT RH		1
-31	3H2-16-15	•HOSE - (NAA)		1
	AN737TW46	•CLAMP -		2
-32	AN742D18CB	•CLAMP -		1
	AN520-10R8	•SCREW -		1
	AN365-1032	•NUT -		1
	AN742D16	•CLAMP - (AS PER EO 05-5E-6A/64)		1
-33	AN749-3-4	•JUMPER - (AS PER EO 05-5E-6A/64)		1
	AN520-10R10	•SCREW - (AS PER EO 05-5E-6A/64)		1
	AN365-1032	•NUT - (AS PER EO 05-5E-6A/64)		2
-34	13A-64028-107	•LINE ASSY - FUSELAGE REAR FUEL CELL INTERCONNECTING RH VENT TO MAIN VENT	001-100	2
	13A-64028-111	•LINE ASSY - FUSELAGE REAR FUEL CELL INTERCONNECTING RH VENT TO MAIN VENT	101-	1
-35	3H2-16-15	•HOSE - (NAA)		1
	AN737TW46	•CLAMP -		2
	AN742D16	•CLAMP -		4
	AN520-10R8	•SCREW -		1
	AN365-1032	•NUT -		1
-36	AN837-16D	•ELBOW -		1
	AF934-11	•PACKING - O-RING GASOLINE OR KEROSENE		1
	AN924-16D	•NUT -		1
	140-48087	•GASKET - FUSELAGE FORWARD & REAR FUEL CELL VENT LINE ADAPTER		1
-37	151-48080	•ADAPTER - FUSELAGE REAR FUEL CELL INTERCONNECTING TO LH VENT		1
	AN4H4A	•BOLT -		6
-38	AN902-6	•GASKET -		1
-39	AN814-6DL	•PLUG & BLEEDER -	001-210	1
	MS29512-6	•GASKET - FUEL RES STRAIGHT THREAD TUBE FITTING BOSS	001-210 211-	1
	AN814-6D	•PLUG & BLEEDER -		1
-40	MS28741-20-0242	•HOSE ASSY - DETACHABLE END FITTING	211-	1
-41	13A-64023-24	•LINE ASSY - DE-ICING FUEL FLT (RV DRAIN)		1
-42	AN832-4D	•UNION -	211-	1
	AN960D716	•WASHER -	211-	1
	AN924-4D	•NUT -	211-	1
-43	13A-64023-18	•LINE ASSY - FUEL FILTER ALCOHOL DE-ICING (RV DRAIN FLOOR UNION TO OUTLET)	211- 211-	1 1
-44	758-4	•CLIP - INTEGRALLY BONDED SINGLE-HOLE LUG TYPE SUPPORT (ADE)	211-	1
	AN515-8R6	•SCREW -	211-	2
	AN365-832	•NUT -	211-	2
-45	172-48831-955	•LINE ASSY - WHEEL WELL WEB TO FUEL SOV	001-210	1
	172-48831-957	•LINE ASSY - WHEEL WELL WEB TO FUEL SOV	211-	1
-46	172-48874	•LINE ASSY - CENTRE WING FUEL CELL TO WHEEL WELL WEB FUEL SHUT-OFF VALVE		1
-47	AN832-20D	•UNION -		1
	AN924-20D	•NUT -		1
-48	172-48831-135	•LINE - FUSELAGE REAR FUEL CELL TO CENTRE WING CELL INTERCONNECTING FUEL		1
	AN737TW56	•CLAMP -		2
-49	13A-32204	•COVER - FUSELAGE STA 183-207 FUEL HOSE		1
	AN520-10R8	•SCREW -		14
-50	AN4H10A	•BOLT -		2
	2W14	•WASHER - ECCENTRIC (NAA)		4

FIGURE AND INDEX NUMBER	GROUP FUEL SYSTEM MAJOR ASSEMBLY FUSELAGE REAR TANK FUEL SYSTEM PART NUMBER	1234567 NOMENCLATURE	CODE	UNITS PER ASSY
253 -	AN365-428	•NUT -		2
-51	CCA-4900	•VALVE - DRAIN (CAD)		1
-52	151-48096	•BLOCK - FUSELAGE REAR FUEL CELL TRANSFER PUMP SUPPORT		1
-53	151-48076-1	•BRACKET ASSY - FUSELAGE REAR FUEL CELL BOOSTER PUMP LH		1
	151-48076-2	•BRACKET ASSY - FUSELAGE REAR FUEL CELL BOOSTER PUMP RH		1
-54	AN509-8R10	•SCREW -		4
	PK79XZ-8-8	•SCREW - PHILLIPS RECESSED TYPE Z SHEET METAL (PKC)		2
-55	TF31400-3	•PUMP ASSY - BOOSTER (WITH TF12907-1 GASKET) (TPI)		1
	AN76A43	•BOLT -		1
	10B1-6-4-4	•JUMPER - BONDING (NAA)		1
-56	AN74-5	•BOLT - (PUMP ATTACHING)		12
-57	AN840-4	•ADAPTER -		1
-58	140-48804-5	•LINE - CTR/W CELL BOOSTER PUMP SEAL DRAIN		1
-59	CCA-4850	•VALVE - SELF-LOCKING HYDRAULIC DRAIN (CAD)		1
-60	13-64031	ADAPTER ASSY - FUSELAGE REAR FUEL CELL INTERCONN VENT RH (SEE FIG. 250)		REF
-61	151-48002-3	CELL - CENTRE WING FUEL (SEE FIG. 245)		REF
-62	172-48831-185	LINE - MAIN FUEL VENT FUSELAGE FORWARD CELL STA 158-174 (SEE FIG. 252)		REF
-63	1-1045-76	VALVE - SWING CHECK (PAC) (SEE FIG. 252)		REF
		(CONTINUED SEE FIG. 254)		

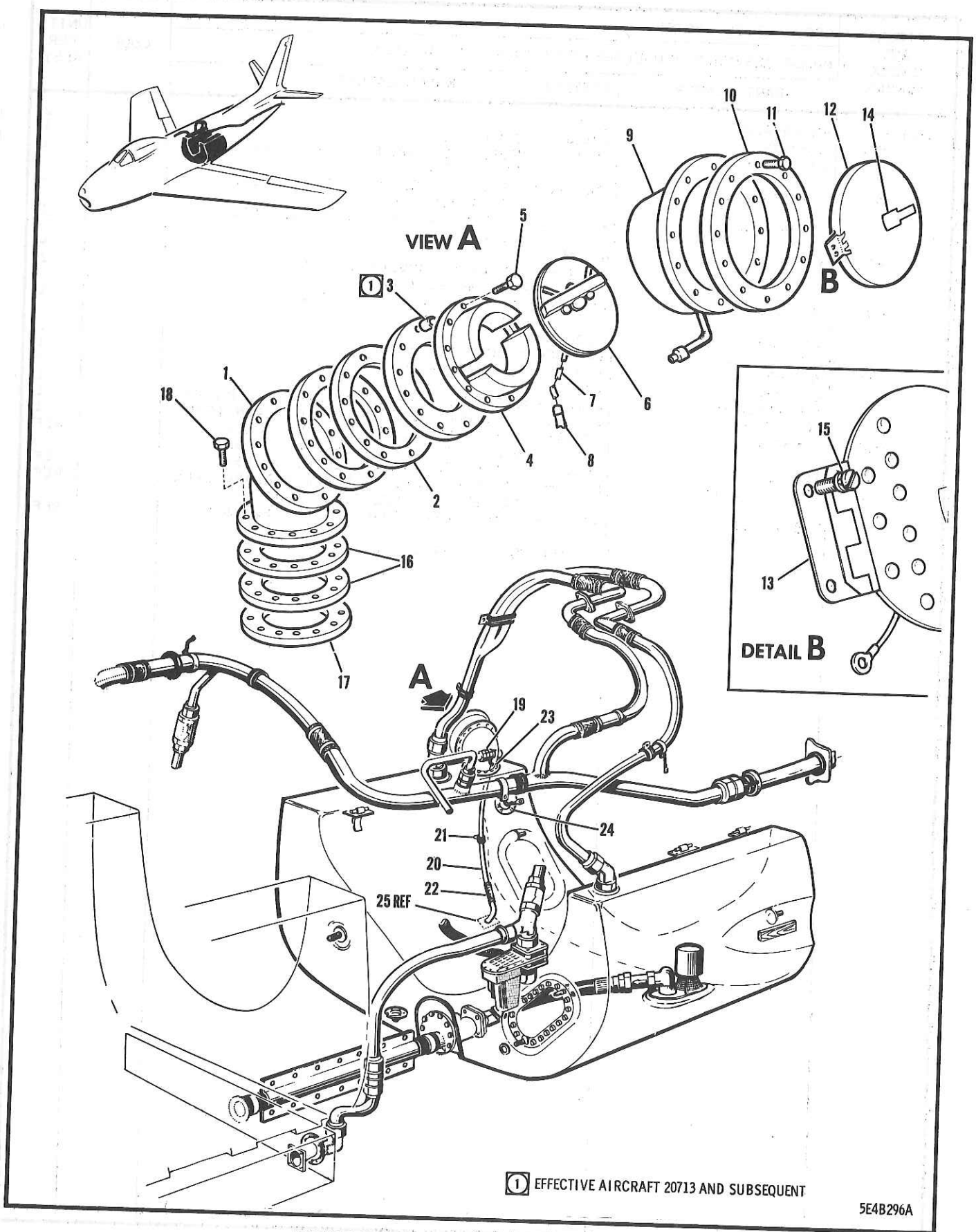

FIGURE 254 REAR FUEL CELL FILLER NECK

FIGURE AND INDEX NUMBER	GROUP	FUEL SYSTEM	CODE	UNITS PER ASSY
	MAJOR ASSEMBLY	REAR FUEL CELL FILLER NECK		
	PART NUMBER	1234567 NOMENCLATURE		
254 -	13A-64001	FUEL SYS EQUIP. INSTL - FUS (SEE FIG. 252)		REF
	13A-64009	.FILLER NECK ASSY - FUSELAGE REAR FUEL CELL	001-712	1
	13A-64009-805	.FILLER NECK ASSY - FUSELAGE REAR FUEL CELL	713-	1
- 1	13A-64010-1	..FILLER NECK ASSY - FUS REAR FUEL CELL		1
	13A-64013	..SEAL - FUS REAR FUEL CELL FILLER NECK	001-712	1
	13A-64013-3	..SEAL - FUS REAR FUEL CELL FILLER NECK	713-	1
- 2	13A-64014	..RING - FILLER NECK SEAL RETAINING	001-712	1
	13A-64014-3	..RING - FILLER NECK SEAL RETAINING	713-	1
	13A-64012	..GASKET - FUEL CELL FILLER ADPT (FUS REAR)		1
- 3	NAS43DD-4-8	..SPACER -	713-	12
- 4	13A-64011	..ADAPTER ASSY - FUSELAGE FUEL FILLER CAP		1
- 5	AN4-5A	..BOLT -	001-020	12
	NAS144-15	..BOLT -	021-	12
	151-48142-301	..CAP ASSY - FUEL CELL FILLER (CLEAN AS PER EO 05-5E-6A/279)		1
- 6	151-48142-33	...CAP - FILLER (MAKE FROM AF39B5435)		1
	151-48142-29	...ANGLE - FILLER CAP		1
- 7	AN416-2	..PIN -		1
- 8	170-48831-154	..TUBE - FUEL CELL FILLER CAP RETR CHAIN		1
- 9	13A-64015-1	.SCUPPER ASSY - FUSELAGE REAR FUEL CELL		1
-10	13A-64017	.GASKET - REAR FUEL CELL SCUPPER FUS SKIN		1
-11	AN509-10R10	.SCREW -		11
	13B-32032	.DOOR ASSY - FUSELAGE REAR FUEL CELL FILLER (AS PER EO 05-5E-6A/176)		1
-12	13B-32032-3	..DOOR - FUEL CELL FILLER		1
	13B-32032-5	..ANGLE - FUSELAGE REAR FUEL CELL FILLER DOOR REINFORCING		1
-13	13-64060-805	..HALF-HINGE - FILLER DOOR		1
	13B-32030	..HINGE-LINK - FUSELAGE REAR FUEL CELL FILLER DOOR		1
	13-64060-803	..HALF-HINGE - FILLER DOOR		1
	13-64060-7	..HINGE-PIN - FILLER DOOR		2
-14	H5000-072-125	..LATCH ASSY - FLUSH (HAS)		1
-15	AN509-10R11	.SCREW -		2
-16	140-48058	.GASKET - FUEL CELL FILLER NECK SHELF		2
-17	176-48101	.COLLAR ASSY - FUEL CELL FILLER FTG PROT		1
-18	AN4H12A	.BOLT -		8
-19	AN815-4D	.UNION -		1
-20	13A-64028-9	.LINE ASSY - REAR CELL FILLER NECK TO DRAIN NIPPLE (STBD SIDE)		1
-21	AN742D6CB	.CLAMP -		1
	AN515-8R8	.SCREW -		1
	AN365-832	.NUT -		1
-22	3H2L4-15	.HOSE - (NAA)		1
	AN737TW22	.CLAMP -		2
-23	AN931-4S7	.GROMMET -		1
-24	AN4H5A	.BOLT -		8
-25	151-48058	NIPPLE ASSY - FUS REAR FUEL CELL SCUPPER CUP DRAIN LINE (SEE SECTION 3)		REF

-000-

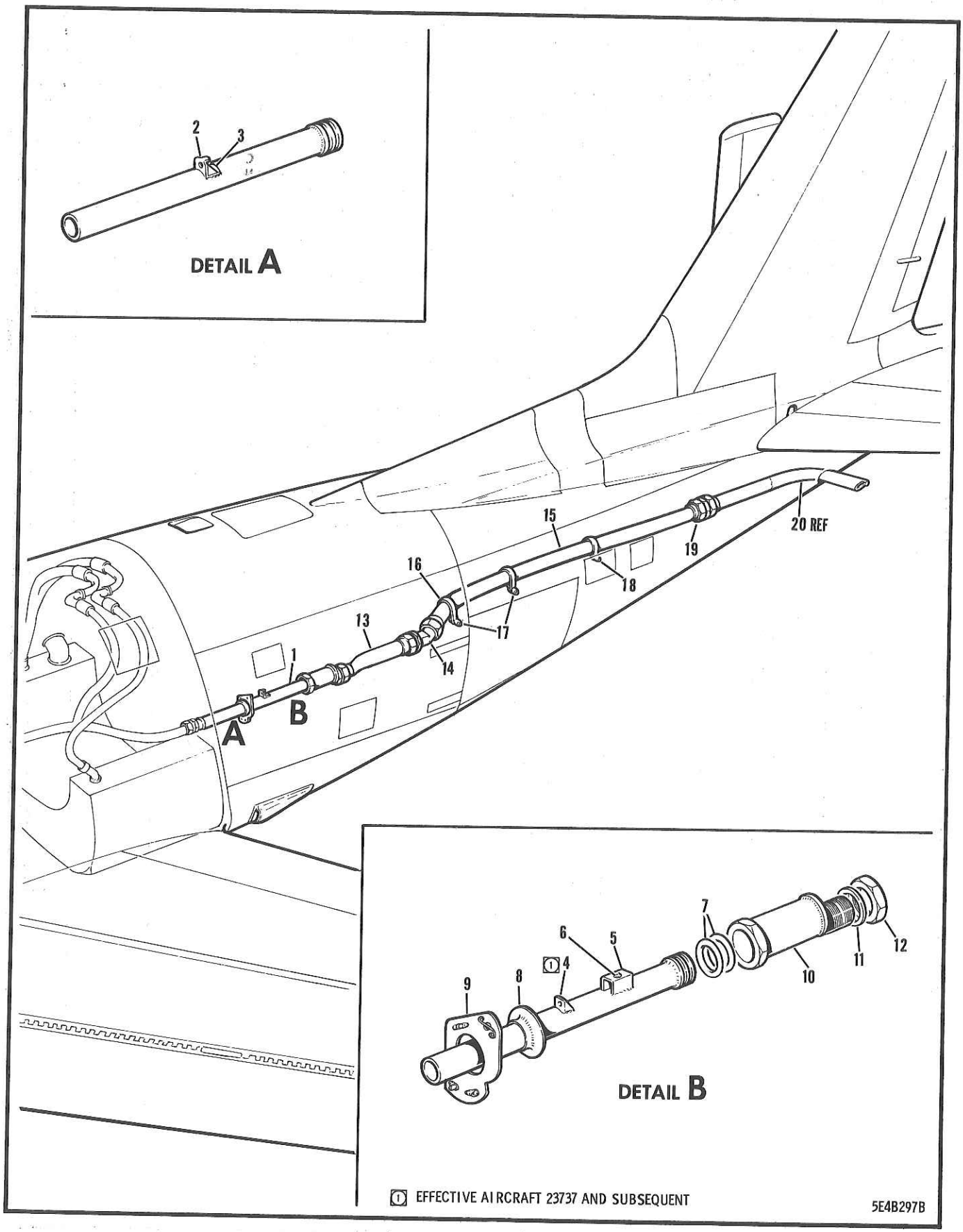

FIGURE 255 FORWARD TO OUTER FUEL CELL VENT

FIGURE AND INDEX NUMBER	GROUP FUEL SYSTEM MAJOR ASSEMBLY FORWARD TO OUTER CELL VENT PART NUMBER	1234567 NOMENCLATURE	CODE	UNITS PER ASSY
255 -	13A-64030	VENT INSTL - FUEL (REAR OF STA 225) (SEE FIG. 253)		NP
	13-64036-801	•LINE ASSY - MAIN FUEL VENT FORWARD FUS CELL TO OUTLET FOURTH SECTION (FUS STA 232-250)(AS PER EO 05-5E-6A/177)		1
- 1	13-64036-3	••TUBE - MAIN FUEL VENT FORWARD FUSELAGE CELL TO OUTLET FOURTH SECTION		1
- 2	13-64036-7	••CLIP - MAIN FUEL VENT FORWARD FUSELAGE CELL TO OUTLET FOURTH SECTION	001-736	1
- 3	K13-091-3	••STIFFENER - (AS PER EO 05-5E-6A/177)	001-736	1
- 4	13-64036-31	••CLIP - MAIN FUEL VENT FORWARD FUSELAGE CELL TO OUTLET FOURTH SECTION LINE	737-	1
	13-64036-100	••BRACKET ASSY - (FUEL VENT LINE LOCK) (AS PER EO 05-5E-6A/177)		1
- 5	13-64036-29	•••BRACKET - (FUEL VENT LINE LOCK)		1
- 6	214-16ND	•••RECEPTACLE - NARROW WIDTH DIMPLED RIVET HOLE (CFC)		1
- 7	AF934-29	••PACKING - O-RING GASOLINE OR KEROSENE		2
- 8	151-48088	•SEAL - FUEL VENT LINE FUSELAGE STA 245		1
- 9	13A-64039	•RETAINER ASSY - FUEL VENT LINE FUSELAGE STA 245 SEAL	001-736	1
	13A-64039-800	•RETAINER ASSY - FUEL VENT LINE FUSELAGE STA 245 SEAL	737-	1
	AN520-10R8	•SCREW -		2
	AN510-10R8	•SCREW -		1
-10	13-64038	•ADAPTER - FUEL VENT LINE FUS BREAK REAR		1
-11	AN960D3016	•WASHER -		1
-12	AN924-24D	•NUT -		1
-13	13A-64037	•LINE ASSY - MAIN FUEL VENT STA 263 TO 286		1
	AN819-24	••SLEEVE -		1
	AN818-24D	••NUT -		1
	AN819-32	••SLEEVE -		1
	AN818-32D	••NUT -		1
-14	AN837-32D	•ELBOW -		1
	AN924-32D	•NUT -		1
-15	13A-64030-9	•LINE ASSY - MAIN FUEL VENT STA 286 TO 367		3
-16	MS21919H32	•CLAMP - HIGH TEMP CUSHIONED SUP. LOOP TYPE (AS PER EO 05-5E-6A/193)		2
-17	NAS43DD-3-24	•SPACER - (STA 298 & 317)		1
-18	NAS43DD-3-48	•SPACER - (STA 340)		3
	AN520-10R16	•SCREW -		3
	AN363-1032	•NUT -		1
-19	AN815-32D	•UNION -		REF
-20	13A-64038	TUBE ASSY - FUEL VENT STREAMLINED (SEE SECTION 3)		

-000-

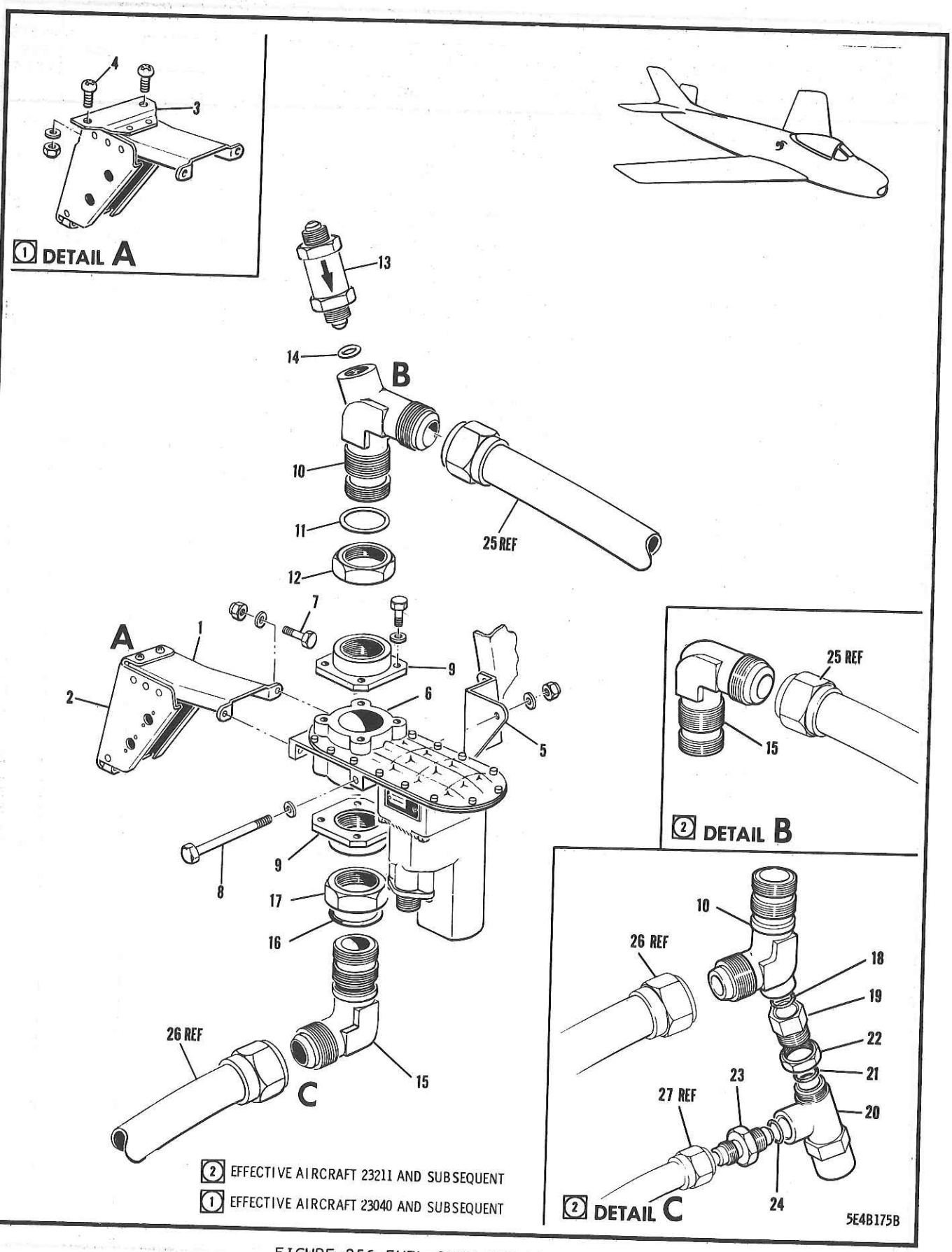

FIGURE 256 FUEL SHUT-OFF VALVE

FIGURE AND INDEX NUMBER	GROUP FUEL SYSTEM MAJOR ASSEMBLY FUEL SHUT-OFF VALVE PART NUMBER	1234567 NOMENCLATURE	CODE	UNITS PER ASSY
256 -	13A-64085	VALVE INSTL - FUEL SHUT-OFF (SEE FIG. 253)	001-210	NP
	13A-64085-801	VALVE INSTL - FUEL SHUT-OFF	211-	NP
	13A-64086	•BRACKET ASSY - FUEL SHUT-OFF VALVE		1
- 1	13A-64086-3	••CHANNEL - FUEL SHUT-OFF VALVE BRACKET		1
- 2	13A-64086-5	••BRACKET - FUEL SHUT-OFF VALVE		1
- 3	13A-64086-9	••PLATE - FUEL SHUT-OFF VALVE BRACKET	040-	1
	AN515-6R8	••SCREW -	001-039	3
	AN515-6R8	••SCREW -	040-	1
- 4	AN3-4	•BOLT - (BRACKET ATTACHING)	040-	2
	AN960D10	•WASHER -	040-	2
	AN365D1032	•NUT -	040-	2
- 5	13A-64085-3	•BRACKET - FUEL SHUT-OFF VALVE		1
	AN515-8R10	•SCREW - (BRACKET ATTACHING)		2
- 6	WE451-2D	•VALVE ASSY - MOTOR-ACTUATED SLIDE (WTR)		1
- 7	AN3-5A	•BOLT - (VALVE TO CHANNEL ATTACHING)	001-039	2
	AN4-5A	•BOLT - (VALVE TO CHANNEL ATTACHING)	040-	2
	AN960-10L	•WASHER -	001-039	2
	AN960-416L	•WASHER -	040-	2
	AN364-1032	•NUT -	001-039	2
	AN364-428	•NUT -	040-	2
- 8	13A-64085-7	•BOLT - HEXAGONAL (VALVE TO BRACKET ATT)	001-039	1
	AN174-37A	•BOLT - (VALVE TO BRACKET ATTACHING)	040-	1
	AN960D10L	•WASHER -	001-039	2
	AN960-416L	•WASHER -	040-	2
	AN364-1032	•NUT -	001-039	1
	AN364-428	•NUT -	040-	1
- 9	172-48072	•ADAPTER - FUEL SHUT-OFF VALVE INLET		2
	AN5H4A	•BOLT - (ADAPTER TO VALVE ATTACHING)		8
	AN960-516L	•WASHER -		8
-10	172-48164	•FITTING - FUEL & ALCOHOL FILTER INLET		1
-11	AF934-116	•PACKING - O-RING GASOLINE & KEROSENE		1
-12	AN924-20D	•NUT -		1
-13	11-344-75	•CHECK-VALVE - SWING (PAC)	001-210	1
-14	AF934-92	•PACKING - O-RING GASOLINE & KEROSENE	001-210	1
-15	13A-64087	•ELBOW - FUEL SHUT-OFF VALVE SPECIAL		1
-16	AF934-116	•PACKING - O-RING GASOLINE & KEROSENE		1
-17	AN924-20D	•NUT -		1
-18	AF934-92	•PACKING - O-RING GASOLINE & KEROSENE	211-	1
-19	AN893-3D	•REDUCER -	211-	1
-20	2-2850-76	•VALVE -	211-	1
-21	AF934-7	•PACKING - O-RING GASOLINE & KEROSENE	211-	1
-22	AN924-4D	•NUT -	211-	1
-23	13A-64027	•RESTRICTOR - FUEL FILTER ALC D/ICE PRESSURE SWITCH LINE	211-	1
-24	AF934-7	•PACKING - O-RING GASOLINE & KEROSENE		REF
-25	172-48831-955	LINE ASSY - FUEL SHUT-OFF VAL (SEE FIG.253)		REF
-26	MS28741-20-0242	HOSE ASSY - DETACHABLE END FITTING MEDIUM PRESSURE (SEE FIG. 253)		REF
-27	13A-64023-24	LINE ASSY - DE-ICING FUEL FLT (SEE FIG.253)		

-000-

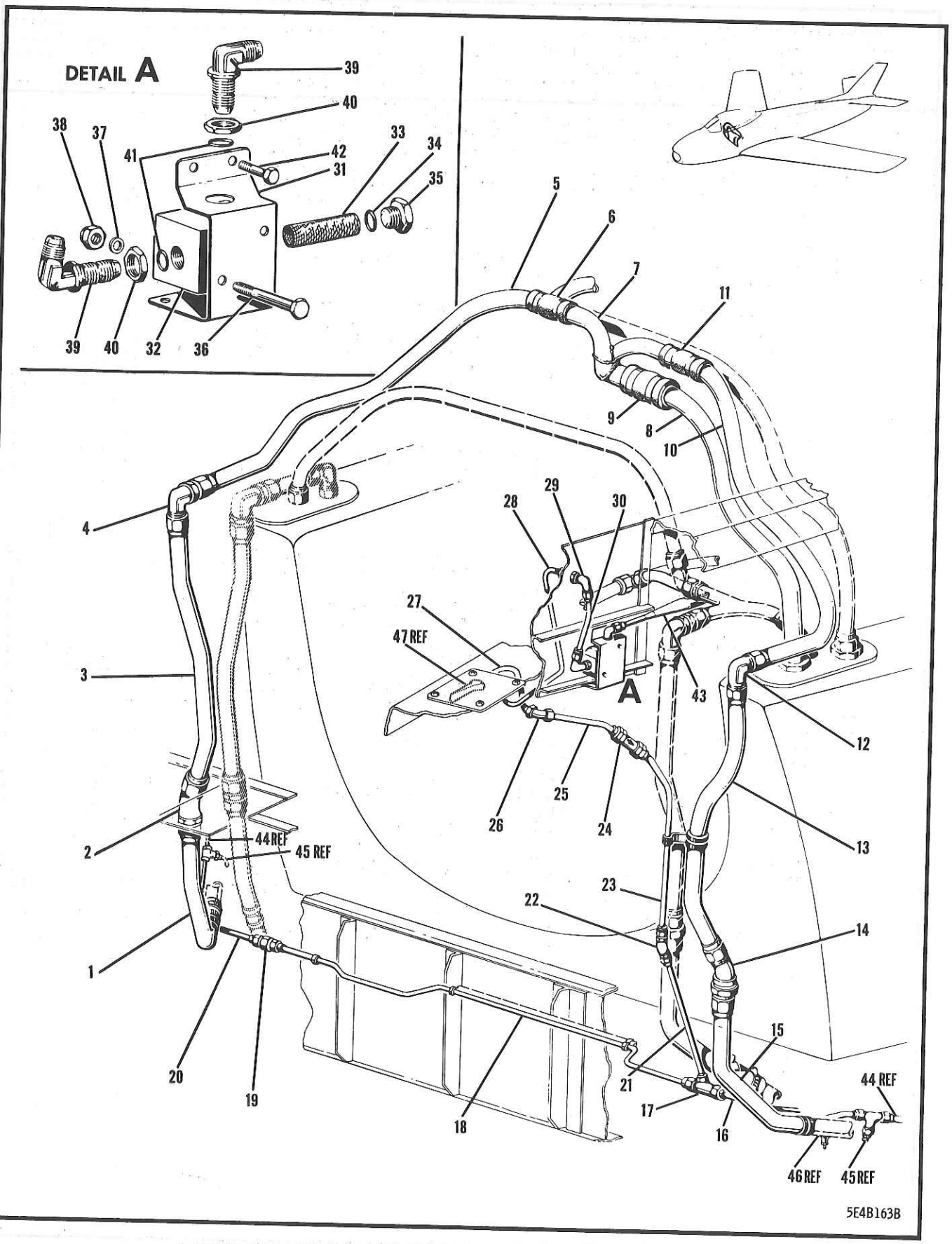

FIGURE 257 FUSELAGE SECTION DROP TANK FUEL & PRESSURE

FIGURE AND INDEX NUMBER	GROUP FUEL SYSTEM MAJOR ASSEMBLY FUSELAGE SECTION DROP TANK FUEL & PRESSURE PART NUMBER	1234567 NOMENCLATURE	CODE	UNITS PER ASSY
257 -	172-48203-51	FUEL & PRESSURE EQUIP. INSTL - DROP TANK FUSELAGE (SEE FIG. 252)		NP
- 1	172-48831-306	.LINE ASSY - DROP TANK TO FUSELAGE FWD CELL THIRD SECTION RH FUEL		1
- 2	AN837-20D	.ELBOW -		1
	AN960D2616	.WASHER -		1
	AN924-20D	.NUT -		1
- 3	172-48831-14	.LINE ASSY - DROP TANK TO FUSELAGE FWD CELL FOURTH SECTION RH FUEL		1
- 4	AN833-20D	.ELBOW -		1
	AN960D2616	.WASHER -		1
	AN924-20D	.NUT -		1
- 5	172-48831-89	.LINE ASSY - DROP TANK 4-WAY CV TO BHD RH		1
- 6	3H2-20-15	.HOSE - (NAA)		2
	AN737TW58	.CLAMP -		1
- 7	172-48872	.LINE ASSY - DROP FUEL TANK JUNCTION TEE		1
	AN749-3-6	..JUMPER -		1
	AN520-10R8	..SCREW -		1
	AN365-1032	..NUT -		1
- 8	172-48831-99	.LINE ASSY - DROP FUEL TANK LINE JCT TEE TO FUEL LEVEL CONTROL VALVE		1
- 9	3H2-20-15	.HOSE - (NAA)		2
	AN737TW58	.CLAMP -		1
-10	172-48831-15	.LINE ASSY - DROP TANK 4-WAY CV TO BHD LH		1
-11	3H2-20-15	.HOSE - (NAA)		2
	AN737TW58	.CLAMP -		1
-12	AN833-20D	.ELBOW -		1
	AN960D2616	.WASHER -		1
	AN924-20D	.NUT -		1
-13	172-48831-13	.LINE ASSY - DROP TANK TO FUSELAGE FWD CELL FOURTH SECTION LH FUEL		1
	AN742D8C	.CLAMP -		1
	AN742D22C	.CLAMP -		1
	AN515-8R7	.SCREW -		1
	AN365-832	.NUT -		1
-14	AN837-20D	.ELBOW -		1
	AN960D2616	.WASHER -		1
	AN924-20D	.NUT -		1
-15	172-48831-305	.LINE ASSY - DROP TANK TO FUSELAGE FWD CELL THIRD SECTION LH FUEL		1
-16	172-48831-9	.LINE ASSY - DROP TANK PRESSURE TEE TO TEE		1
	AN742D8C	.CLAMP -		1
	AN515-8R7	.SCREW -		1
-17	172-48212	.FITTING - DROP FUEL TANK A/PRESS LINE ORF		1
-18	172-48831-8	.LINE ASSY - DROP TANK PRESS. TEE TO ELBOW		1
	AN742D8	.CLAMP -		3
	AN742D8C	.CLAMP -		3
	AN515-8R7	.SCREW -		3
	AN365-832	.NUT -		3
-19	AN815-6D	.UNION -		1
-20	172-48831-10	.LINE ASSY - DROP TANK PRESS. ELBOW TO TEE		1
	AN742D8C	.CLAMP -		1
	AN515-8R7	.SCREW -		1
-21	172-48831-7	.LINE ASSY - DROP TANK PRESSURE GUN-BAY FLOOR ELBOW TO TEE		1
-22	AN837-6D	.ELBOW -		1
	AN960D916	.WASHER -		1
	AN924-6D	.NUT -		1
-23	172-48831-86	.LINE ASSY - CHECK VALVE TO GUN-BAY FLOOR DROP FUEL TANK AIR-PRESSURE		1

FIGURE AND INDEX NUMBER	GROUP FUEL SYSTEM MAJOR ASSEMBLY FUSELAGE SECTION DROP TANK FUEL & PRESSURE PART NUMBER	1234567 NOMENCLATURE	CODE	UNITS PER ASSY
257 -24	869A-6TT	•VALVE - FUEL CHECK (JPC)		1
-25	172-48831-85	•LINE ASSY - PRESSURE WEB ELBOW TO CV DROP FUEL TANK AIR-PRESSURE		1
-26	AN837-6D	•ELBOW -		1
	AN960D916	•WASHER -		2
	2W1V36-33-64	•WASHER - PLAIN (NAA)		1
	AN924-6D	•NUT -		1
-27	172-48831-5	•LINE ASSY - DROP TANK PRESSURE SOV TO PRESSURE WEB ELBOW		1
	8C7B8S-6-1/2	•COVER - (NAA)		1
-28	172-48831-4	•LINE ASSY - DROP TANK PRESSURE WEB ELBOW TO SHUT-OFF VALVE	340-	1
	8C7B8S-2-1/2	•COVER - (NAA)		1
-29	AN837-6D	•ELBOW -	340-	1
	AN960D916	•WASHER -		1
	AN924-6D	•NUT -		2
-30	172-48831-3	•LINE ASSY - DROP TANK PRESSURE RGLR TO PRESSURE WEB ELBOW		1
	172-48220	•FILTER ASSY - DROP FUEL TANK A/PRESS LINE		1
-31	172-48217	••BRACKET - DROP FUEL TANK A/PRESS LINE FLT		1
-32	172-48219	••BODY - DROP FUEL TANK A/PRESS LINE FILTER		1
-33	172-48218	••SCREEN - DROP FUEL TANK A/PRESS LINE FLT		1
-34	AF934-107	••PACKING - O-RING GASOLINE OR KEROSENE		1
-35	172-48221	••RETAINER - DROP FUEL TANK AIR-PRESSURE LINE FILTER		1
-36	AN3-17A	••BOLT - (BODY TO BRACKET ATTACHING)		2
-37	AN960D10L	••WASHER -		4
-38	AN365-1032	••NUT -		2
-39	AN833-6D	••ELBOW -		2
-40	AN924-6D	••NUT -		2
-41	AF934-89	••PACKING - O-RING GASOLINE OR KEROSENE		2
-42	AN3-5A	•BOLT - (BRACKET TO PANEL ATTACHING)		2
	AN3-4A	•BOLT -		1
	AN520-10R8	•SCREW -		1
-43	170-48854-960	•LINE ASSY - DROP FUEL TANK PRESSURE SUPPLY TO PRESSURE REGULATOR	001-210	1
	170-48854-964	•LINE ASSY - DROP FUEL TANK PRESSURE SUPPLY TO PRESSURE REGULATOR	211-	1
	AN931-10S14	•GROMMET -	001-210	1
	AN931-11S16	•GROMMET -	211-	1
-44	172-48814-23	LINE ASSY - FUEL (SEE FIG. 258)		REF
-45	172-48807-951	LINE ASSY - FUEL (SEE FIG. 258 & 259)		REF
-46	172-48811-1	LINE ASSY - FUEL (SEE FIG. 258 & 259)		REF
-47	32222	VALVE - SHUT-OFF (KAP) (SEE SECTION 6)		REF

-000-

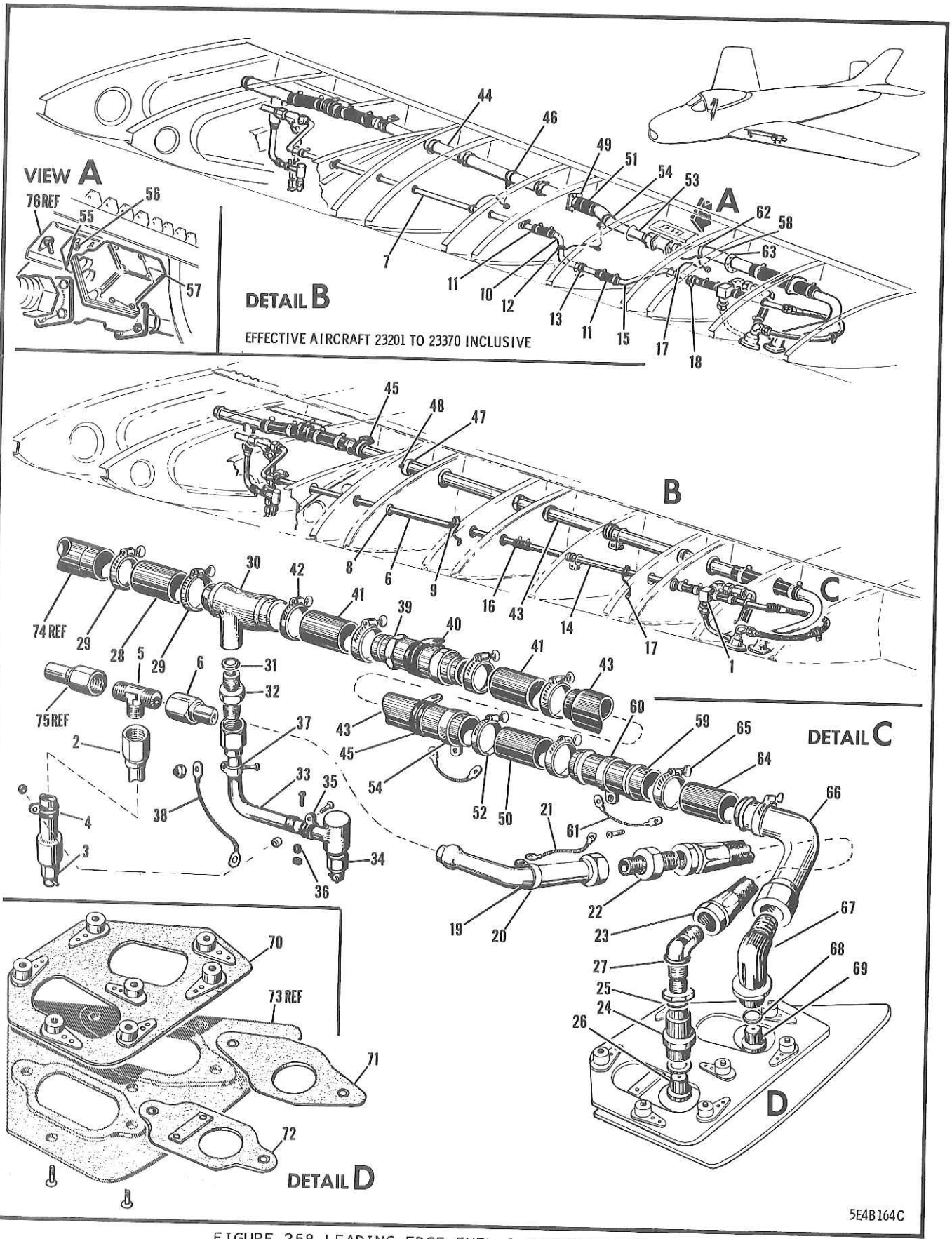

FIGURE 258 LEADING EDGE FUEL & PRESSURE EQUIPMENT
(EFFECTIVE AIRCRAFT 23001 TO 23370 INCL)

FIGURE AND INDEX NUMBER	GROUP FUEL SYSTEM MAJOR ASSEMBLY LEADING EDGE FUEL & PRESSURE EQUIPMENT PART NUMBER	1234567 NOMENCLATURE	CODE	UNITS PER ASSY
258 -	172-48202-101	FUEL & PRESS. EQUIP. INSTL - DROP TANK PORT WING (SEE FIG. 247)	001-200	NP
	172-48202-803	FUEL & PRESS. EQUIP. INSTL - DROP TANK PORT WING (FOR UPPER CODE SEE FIG. 230) (AS PER EO 05-5E-6B/9)	201-370	NP
	172-48202-102	FUEL & PRESS. EQUIP. INSTL - DROP TANK STBD WING (SEE FIG. 247)	001-200	NP
	172-48202-804	FUEL & PRESS. EQUIP. INSTL - DROP TANK STBD WING (FOR UPPER CODE SEE FIG. 230) (AS PER EO 05-5E-6B/9)	201-370	NP
- 1	172-48208-1	.RELIEF-VALVE ASSY - DROP FUEL TANK PRESS. & THERMAL PORT WING (SEE FIG. 260)	001-370	REF
	172-48208-2	.RELIEF-VALVE ASSY - DROP FUEL TANK PRESS. & THERMAL STBD WING (SEE FIG. 260)	001-370	REF
- 2	172-48807-951	.LINE ASSY - DROP FUEL TANK A/PRESS DRAIN	001-370	1
- 3	CCA-4850	..VALVE - SELF-LOCKING HYDRAULIC DRAIN(CAD)	001-370	1
	AN819-6Z	..SLEEVE -	001-370	1
	AN818-6D	..NUT -	001-370	1
- 4	AN742D8C	.CLAMP -	001-370	1
	NAS43DD-3-24	.SPACER -	001-370	1
	AN515-8R10	.SCREW -	001-370	1
	AN365-832	.NUT -	001-370	1
- 5	AN824-6D	.TEE -	001-370	1
- 6	172-48814-23	.LINE ASSY - DROP TANK PRESSURE TEE TO HOSE FIRST SECTION	001-200	1
- 7	172-48814-963	.LINE ASSY - DROP TANK PRESSURE TEE TO HOSE WING STA 80	201-370	1
	AN742D8C	.CLAMP -	001-370	1
	758-6	.CLIP - INTEGRALLY BONDED SINGLE-HOLE LUG TYPE SUPPORT (ADE)	001-200	1
	AN515-8R6	.SCREW -	001-370	3
	AN365-832	.NUT -	001-370	3
- 9	AN735D6	.CLAMP -	001-370	1
	AN749-3-4	.JUMPER -	001-370	1
	NAS221-8	.SCREW -	001-370	2
	AN365-1032	.NUT -	001-370	2
-10	13A-64091-147	.LINE - DROP TANK PRESSURE LE STA 80 TO 89 PORT WING	201-370	1
	13A-64091-148	.LINE - DROP TANK PRESSURE LE STA 80 TO 89 STARBOARD WING	201-370	1
-11	AN737TW26	.CLAMP -	201-370	4
-12	AN735D6	.CLAMP -	201-370	1
	AN749-3-4	.JUMPER -	201-370	1
	NAS221-8	.SCREW -	201-370	2
	AN365-1032	.NUT -	201-370	2
-13	758-6	.CLIP - INTEGRALLY BONDED SINGLE-HOLE LUG TYPE SUPPORT (ADE)	201-370	1
	AN515-8R6	.SCREW -	201-370	2
	AN365-832	.NUT -	201-370	2
-14	172-48814-72	.LINE ASSY - DROP TANK HOSE TO PRESSURE RV SECOND SECTION PORT WING	001-200	1
-15	13A-64091-149	.LINE - DROP TANK PRESSURE LE STA 89-102 PORT WING	201-370	1
	172-48814-73	.LINE ASSY - DROP TANK HOSE TO PRESSURE RV SECOND SECTION STARBOARD WING	001-200	1
	13A-64091-150	.LINE - DROP TANK PRESSURE LE STA 83 TO 102 STARBOARD WING	201-370	1
-16	3H2-6-15	.HOSE - (NAA)	001-200	1
	AN737TW26	.CLAMP -	001-200	2
	AN931-9-13	.GROMMET -	001-200	2

FIGURE AND INDEX NUMBER	GROUP FUEL SYSTEM MAJOR ASSEMBLY LEADING EDGE FUEL & PRESSURE EQUIPMENT PART NUMBER	1234567 NOMENCLATURE	CODE	UNITS PER ASSY
258 -	AN735D6	•CLAMP -	001-370	1
-17	AN749-3-4	•JUMPER -	001-370	1
	NAS221-8	•SCREW -	001-370	2
	AN365-1032	•NUT -	001-370	2
-18	769-6	•CLIP - INTEGRALLY BONDED HEAVY DUTY LUG TYPE SUPPORT (ADE)	201-370	1
	AN515-8R6	•SCREW -	201-370	3
	AN365-832	•NUT -	201-370	3
-19	172-48814-41	•LINE ASSY - DROP FUEL TANK RELIEF-VALVE TO FLEXIBLE AIR HOSE	001-370	1
	AN931-9-13	•GROMMET -	001-370	1
-20	AN735D6	•CLAMP -	001-370	1
-21	AN749-3-4	•JUMPER -	001-370	1
	NAS221-8	•SCREW -	001-370	2
	AN365-1032	•NUT -	001-370	2
-22	AN815-6D	•UNION -	001-370	1
-23	AN6264-6D13	•HOSE ASSY - DETACHABLE END SWIVEL TYPE FTG	001-370	1
	172-48229	•FITTING ASSY - DROP FUEL TANK AIR LINE DISCONNECT	001-370	1
-24	172-48223	••FITTING - DROP FUEL TANK AIR LINE DISC•	001-370	1
	AF934-15	••PACKING - O-RING GASOLINE OR KEROSENE	001-020	1
	191-48015	••SEAL - DROP FUEL TANK AIR LINE DISCONNECT	021-370	1
-25	AF934-89	••PACKING - O-RING GASOLINE OR KEROSENE	001-370	1
-26	172-48215	••PLUG - DROP FUEL TANK AIR LINE DISCONNECT	001-370	1
	AN924-6D	••NUT -	001-370	1
-27	AN833-6D	••ELBOW -	001-370	1
-28	3H2-20-15	•HOSE - (NAA)	001-370	1
-29	AN737TW56	•CLAMP -	001-370	2
-30	172-48811-1	•LINE ASSY - DROP FUEL TANK TO FWD CELL THIRD SECTION PORT WING	001-370	1
	172-48811-2	•LINE ASSY - DROP FUEL TANK TO FWD CELL THIRD SECTION STARBOARD WING	001-370	1
-31	AF934-89	••PACKING - O-RING GASOLINE OR KEROSENE	001-370	1
-33	172-48808-951	•LINE ASSY - DROP FUEL TANK LINE DRAIN PORT WING	001-370	1
	172-48808-952	•LINE ASSY - DROP FUEL TANK LINE DRAIN STARBOARD WING	001-370	1
-34	CCA-4850	••VALVE - SELF-LOCKING HYDRAULIC DRAIN(CAD)	001-370	1
	AN819-6Z	••SLEEVE -	001-370	1
	AN818-6D	••NUT -	001-370	1
-35	AN742D8C	•CLAMP -	001-370	2
-36	NAS43DD-3-56	•SPACER -	001-370	1
	AN515-8R20	•SCREW -	001-370	1
	AN365-832	•NUT -	001-370	1
-37	AN735D6	•CLAMP -	001-370	1
-38	AN749-3-4	•JUMPER -	001-370	1
	NAS221-8	•SCREW -	001-370	1
	AN365-1032	•NUT -	001-370	1
-39	8-3044-75	•VALVE - SWING CHECK (PAC)	001-370	1
-40	AN742D42CB	•CLAMP -	001-370	1
	NAS43DD-3-24	•SPACER -	001-370	1
	AN3-7A	•BOLT -	001-370	1
	AN365-1032	•NUT -	001-370	1
-41	3H2-20-15	•HOSE - (NAA)	001-370	2
-42	AN737TW56	•CLAMP -	001-370	4
-43	172-48814-69	•LINE - DROP FUEL TANK LE STA 100 TO CV	001-200	1
-44	172-48814-981	•LINE - DROP FUEL TANK LE STA 78 TO CV	201-370	1
-45	AN742D22CB	•CLAMP -	001-370	1
	NAS43DD3-32	•SPACER -	001-370	1
	AN520-10R18	•SCREW -	001-370	1

FIGURE AND INDEX NUMBER	GROUP FUEL SYSTEM MAJOR ASSEMBLY LEADING EDGE FUEL & PRESSURE EQUIPMENT PART NUMBER	1234567 NOMENCLATURE	CODE	UNITS PER ASSY
258 -	AN365-1032	•NUT -	001-370	1
-46	AN735D20	•CLAMP -	201-370	1
	AN749-3-4	•JUMPER -	201-370	1
	NAS221-8	•SCREW -	201-370	1
	AN365-1032	•NUT -	201-370	1
-47	172-48204	•FAIRLEAD - DROP FUEL TANK LINE	001-370	4
-48	NAS221-8	•SCREW -	001-370	4
	AN365-1032	•NUT -	001-370	4
-49	13A-64092	•FAIRLEAD ASSY - WING EXTENDED LEADING EDGE INDICATOR LINE	201-370	1
	AN515-6R7	•SCREW -	201-370	4
	AN960-6	•WASHER -	201-370	4
	AN365-632	•NUT -	201-370	4
-50	3H2-20-15	•HOSE - (NAA)	001-200	1
-51	3H2-20-13	•HOSE - (NAA)	201-370	1
-52	AN737TW56	•CLAMP -	001-370	2
-53	13A-64090-1	•LINE ASSY - EXTENDED LE IND PORT WING	201-370	1
	13A-64090-2	•LINE ASSY - EXTENDED LE IND STARBOARD WING	201-370	1
-54	AN735D20	•CLAMP -	001-370	1
	AN749-3-4	•JUMPER -	001-370	1
	NAS221-8	•SCREW -	001-370	1
	AN365-1032	•NUT -	001-370	1
-55	193-48222	•BRACKET ASSY - DROP TANK FUEL AIR INDICATOR SUPPORT	201-370	1
-56	AN509-10R7	•SCREW -	201-370	3
	AN960D10L	•WASHER -	201-370	3
	AN365-1032	•NUT -	201-370	3
-57	13A-64089	•INDICATOR ASSY - DROP FUEL TANK AIR	201-370	1
	F-7097	••SWITCH - FLUID INDICATING (REV)	201-370	1
	176-48221	••BRACKET ASSY - DROP FUEL TANK AIR IND	201-370	1
	AN760D16	••CONNECTOR -	201-370	2
	4G2-16	••GASKET - SWIVEL FITTING FLANGED (NAA)	201-370	2
	AN3H5A	••BOLT -	201-370	8
	AN960D10L	••WASHER -	001-370	8
	AN781-1	•NIPPLE -	201-370	2
	AN3-4A	•BOLT -	201-370	2
	AN960D10	•WASHER -	201-370	2
-58	13A-64091-145	•LINE ASSY - DROP FUEL TANK LE STA 107-92 INDICATOR PORT WING	201-370	1
	13A-64091-146	•LINE ASSY - DROP FUEL TANK LE STA 107-92 INDICATOR STARBOARD WING	201-370	1
-59	172-48822	•LINE - DROP FUEL TANK WING LE STA 100-106	001-200	1
-60	AN735D16	•CLAMP -	001-200	1
-61	AN749-3-5	•JUMPER -	001-200	1
-62	AN749-3-4	•JUMPER -	201-370	1
	NAS221-8	•SCREW -	001-370	1
	AN365-1032	•NUT -	001-370	1
-63	13A-64094	•FAIRLEAD ASSY - INDICATOR EXTENDED WING LE	201-370	1
	AN515-6R7	•SCREW -	201-370	5
	AN960-6	•WASHER -	201-370	5
	AN365-632	•NUT -	201-370	5
-64	3H2-16-36	•HOSE - (NAA)	001-370	1
-65	AN737TW46	•CLAMP -	001-370	2
-66	172-48814-42	•LINE ASSY - DROP FUEL TANK BREAK-AWAY FTG TO HOSE FUEL	001-370	1
	172-48228	•FITTING ASSY - DROP FUEL TANK LINE DISC.	001-370	1
-67	172-48222	••FITTING - DROP FUEL TANK FUEL LINE DISC.	001-370	1
-68	AF934-19	••PACKING - O-RING GASOLINE OR KEROSENE	001-370	1
-69	172-48214	••PLUG - DROP FUEL TANK LINE DISC. FITTING	001-370	1
-70	172-48216-1	•PLATE ASSY - DROP TANK FUEL & AIR LINE DISCONNECT RET PORT WING	001-370	1

FIGURE AND INDEX NUMBER	GROUP FUEL SYSTEM MAJOR ASSEMBLY LEADING EDGE FUEL & PRESSURE EQUIPMENT PART NUMBER	1234567 NOMENCLATURE	CODE	UNITS PER ASSY
258 -	172-48216-2	•PLATE ASSY - DROP TANK FUEL & AIR LINE DISCONNECT RET STARBOARD WING	001-370	1
-71	172-48225-1	•PLATE - DROP TANK FUEL LINE DISC. FITTING RETURN PORT WING	001-370	1
	172-48225-2	•PLATE - DROP TANK FUEL LINE DISC. FITTING RET STARBOARD WING	001-370	1
-72	172-48226	•PLATE ASSY - DROP FUEL TANK AIR LINE DISC. FITTING RETURN	001-370	1
	AN507-428R14	•SCREW - (PLATE ATTACHING)	001-370	7
-73	13A-64031-1	PLATE - DROP TANK FUEL & AIR LINE DISC. FTG BASE PORT WING (SEE SECTION 1)		REF
-74	172-48831-305	LINE ASSY - FUEL (SEE FIG. 257)		REF
-75	172-48831-9	LINE ASSY - FUEL (SEE FIG. 257)		REF
-76	13A-64095-1	BRACKET - EXTENDED LE DROP TANK INDICATOR PORT WING (SEE SECTION 1)		REF

-000-

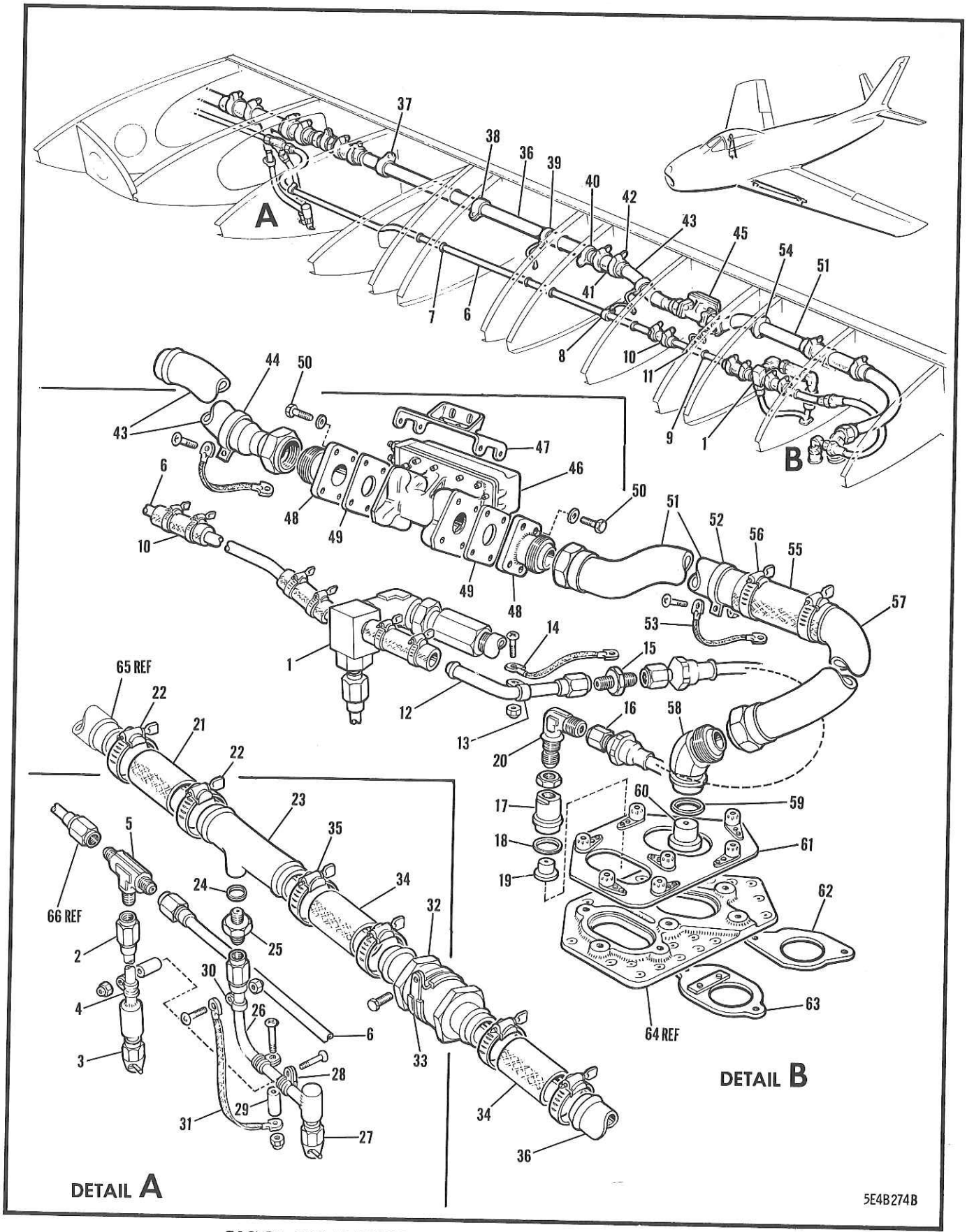

FIGURE 259 LEADING EDGE FUEL & PRESSURE EQUIPMENT
(EFFECTIVE AIRCRAFT 23371 & SUBS)

FIGURE AND INDEX NUMBER	GROUP FUEL SYSTEM MAJOR ASSEMBLY LEADING EDGE FUEL & PRESSURE EQUIPMENT PART NUMBER	1234567 NOMENCLATURE	CODE	UNITS PER ASSY
259 -	13B-64010-1	FUEL & PRESSURE EQUIP. INSTL - DROP TANK PORT WING (SEE FIG. 247) (MOD KIT 13B-64010-801 AS PER EO 05-5E-6B/9)	371-	NP
	13B-64010-2	FUEL & PRESSURE EQUIP. INSTL - DROP TANK STBD WING (SEE FIG. 247) (MOD KIT 13B-64010-802 AS PER EO 05-5E-6B/9)	371-	NP
- 1	172-48208-851	.VALVE ASSY - DROP FUEL TANK PRESSURE & THERMAL REL PORT WING (SEE FIG. 260)	371-	REF
	172-48208-852	.VALVE ASSY - DROP FUEL TANK PRESSURE & THERMAL REL STBD WING (SEE FIG. 260)	371-	REF
- 2	172-48807-951	.LINE ASSY - DROP FUEL TANK A/PRESS DRAIN	371-	1
- 3	CCA-4850	..VALVE - SELF-LOCKING HYDRAULIC DRAIN(CAD)	371-	1
	AN819-6Z	..SLEEVE -	371-	1
	AN818-6D	..NUT -	371-	1
- 4	AN742D8C	.CLAMP -	371-	1
	NAS43DD-3-24	.SPACER -	371-	1
	AN515-8R10	.SCREW -	371-	1
	AN365-832	.NUT -	371-	1
- 5	AN824-6D	.TEE -	371-	1
- 6	172-48814-967	.LINE ASSY - DROP TANK TEE TO HOSE LE STA 92 PORT WING	371-	1
	172-48814-965	.LINE ASSY - DROP TANK TEE TO HOSE LE STA 92 STARBOARD WING	371-	8
- 7	AN931-6S10	.GROMMET -	371-	1
- 8	AN735D6	.CLAMP -	371-	1
	AN749-3-4	.JUMPER -	371-	1
	AN749-3-4	.JUMPER -	371-	1
	NAS221-8	.SCREW -	371-	1
	AN365-1032	.NUT -	371-	1
- 9	13B-64015	.LINE - DROP TANK PRESSURE LE STA 92 TO 100	371-	1
-10	3H2-6-13	.HOSE - AIR (NAA)	371-	2
	AN737TW26	.CLAMP -	371-	1
	AN735D6	.CLAMP -	371-	1
-11	AN735D6	.CLAMP -	371-	1
	AN749-3-4	.JUMPER -	371-	1
	AN749-3-4	.JUMPER -	371-	1
	NAS221-8	.SCREW -	371-	1
	AN365-1032	.NUT -	371-	1
-12	172-48814-41	.LINE ASSY - DROP FUEL TANK RELIEF-VALVE TO FLEXIBLE AIR HOSE	371-	1
	AN931-9-13	.GROMMET -	371-	1
-13	AN735D6	.CLAMP -	371-	1
-14	AN749-3-4	.JUMPER -	371-	2
	NAS221-8	.SCREW -	371-	2
	AN365-1032	.NUT -	371-	1
-15	AN815-6D	.UNION -	371-	1
-16	AN6264-6D13	.HOSE ASSY - DETACHABLE END SWIVEL TYPE FTG	371-	1
	172-48229	.FITTING ASSY - DROP FUEL TANK AIR LINE DISCONNECT	371-	1
-17	172-48223	..FITTING - DROP FUEL TANK AIR LINE DISC.	371-	1
	191-48015	..SEAL - DROP FUEL TANK AIR LINE DISC.	371-	1
-18	AF934-89	..PACKING - O-RING GASOLINE OR KEROSENE	371-	1
-19	172-48215	..PLUG - DROP FUEL TANK AIR LINE DISCONNECT	371-	1
	AN924-6D	..NUT -	371-	1
-20	AN833-6D	..ELBOW -	371-	1
-21	3H2-20-15	.HOSE - FUEL (NAA)	371-	2
-22	AN737TW56	.CLAMP -	371-	1
-23	172-48811-1	.LINE ASSY - DROP FUEL TANK TO FORWARD CELL THIRD SECTION PORT WING	371-	1
	172-48811-2	.LINE ASSY - DROP FUEL TANK TO FORWARD CELL THIRD SECTION STARBOARD WING		

FIGURE AND INDEX NUMBER	GROUP FUEL SYSTEM MAJOR ASSEMBLY LEADING EDGE FUEL & PRESSURE EQUIPMENT PART NUMBER	1234567 NOMENCLATURE	CODE	UNITS PER ASSY
259 -24	AF934-89	••PACKING - O-RING GASOLINE OR KEROSENE	371-	1
-25	AN815-6D	••UNION -	371-	1
-26	172-48808-951	•LINE ASSY - DROP FUEL TANK LINE DRAIN PORT WING	371-	1
	172-48808-952	•LINE ASSY - DROP FUEL TANK LINE DRAIN STARBOARD WING	371-	1
-27	CCA-4850	••VALVE - SELF-LOCKING HYDRAULIC DRAIN(CAD)	371-	1
	AN819-6Z	••SLEEVE -	371-	1
	AN818-6D	••NUT -	371-	1
-28	AN742D8C	•CLAMP -	371-	2
-29	NAS43DD-3-56	•SPACER -	371-	1
	AN515-8R20	•SCREW -	371-	1
	AN365-832	•NUT -	371-	1
-30	AN735D6	•CLAMP -	371-	1
-31	AN749-3-4	•JUMPER -	371-	1
	NAS221-8	•SCREW -	371-	1
	AN365-1032	•NUT -	371-	1
-32	8-3044-75	.VALVE - SWING CHECK (PAC)	371-	1
-33	AN742D42CB	•CLAMP -	371-	1
	NAS43DD-3-24	•SPACER -	371-	1
	AN3-7A	•BOLT -	371-	1
	AN365-1032	•NUT -	371-	1
-34	3H2-20-15	•HOSE - FUEL (NAA)	371-	1
-35	AN737TW56	•CLAMP -	371-	2
-36	172-48814-981	•LINE - DROP FUEL TANK LE STA 78 TO CV	371-	4
-37	AN742D22CB	•CLAMP -	371-	1
	NAS43DD-3-32	•SPACER -	371-	1
	AN520-10R18	•SCREW -	371-	1
	AN365-1032	•NUT -	371-	1
-38	172-48204	•FAIRLEAD - DROP FUEL TANK LINE (WING STA 56 & LE STA 61)	371-	1
	NAS221-8	•SCREW -	371-	2
	AN365-1032	•NUT -	371-	2
-39	AN735D20	•CLAMP -	371-	2
	AN749-3-4	•JUMPER -	371-	1
	NAS221-8	•SCREW -	371-	1
	AN365-1032	•NUT -	371-	2
-40	172-48204	•FAIRLEAD - DROP FUEL TANK LINE (LE STA 73)	371-	2
	NAS221-8	•SCREW -	371-	1
	AN365-1032	•NUT -	371-	1
-41	3H2-20-13	•HOSE - FUEL (NAA)	371-	1
-42	AN737TW56	•CLAMP -	371-	1
-43	13A-64090-1	•LINE ASSY - INDICATOR EXTENDED LE (PORT)	371-	2
	13A-64090-2	•LINE ASSY - INDICATOR EXTENDED LE (STBD)	371-	1
-44	AN735D20	•CLAMP -	371-	1
	AN749-3-4	•JUMPER -	371-	1
	NAS221-8	•SCREW -	371-	1
	AN365-1032	•NUT -	371-	2
-45	13A-64089	•INDICATOR ASSY - DROP FUEL TANK AIR	371-	2
-46	F-7097	••SWITCH - FLUID INDICATING (REV)	371-	1
-47	176-48221	••BRACKET ASSY - DROP FUEL TANK AIR IND	371-	1
-48	AN760D16	••CONNECTOR -	371-	1
-49	4G2-16	••GASKET - SWIVEL FITTING FLANGED (NAA)	371-	2
-50	AN3H5A	••BOLT -	371-	2
	AN960D10L	••WASHER -	371-	8
	AN781-1	•NIPPLE -	371-	8
	AN3-4A	•BOLT -	371-	2
	AN960D10	•WASHER -	371-	2
-51	13A-64091-145	•LINE ASSY - DROP FUEL TANK LE STA 107-92 INDICATOR PORT WING	371-	2
			371-	1

FIGURE AND INDEX NUMBER	GROUP FUEL SYSTEM MAJOR ASSEMBLY LEADING EDGE FUEL & PRESSURE EQUIPMENT PART NUMBER	1234567 NOMENCLATURE	CODE	UNITS PER ASSY
259 -	13A-64091-146	•LINE ASSY - DROP FUEL TANK LE STA 107-92 INDICATOR STARBOARD WING	371-	1
-52	AN735D16	•CLAMP -	371-	1
-53	AN749-3-4	•JUMPER -	371-	1
	NAS221-8	•SCREW -	371-	2
	AN365-1032	•NUT -	371-	2
-54	13B-64011-3	•FAIRLEAD - INDICATOR EXTENDED WING LE	371-	1
	AN515-6R7	•SCREW -	371-	6
	AN960-6	•WASHER -	371-	6
	AN365-632	•NUT -	371-	6
-55	3H2-16-36	•HOSE - FUEL (NAA)	371-	1
-56	AN737TW46	•CLAMP -	371-	2
-57	172-48814-42	•LINE ASSY - DROP FUEL TANK BREAK-AWAY FTG TO HOSE FUEL	371-	1
	172-48228	•FITTING ASSY - DROP TANK FUEL LINE DISC.	371-	1
-58	172-48222	••FITTING - DROP TANK FUEL LINE DISC.	371-	1
-59	AF934-19	••PACKING - O-RING GASOLINE OR KEROSENE	371-	1
-60	172-48214	••PLUG - DROP TANK FUEL LINE DISC. FITTING	371-	1
-61	172-48216-1	•PLATE ASSY - DROP TANK FUEL & AIR LINE DISCONNECT RETURN PORT WING	371-	1
	172-48216-2	•PLATE ASSY - DROP TANK FUEL & AIR LINE DISCONNECT RETURN STARBOARD WING	371-	1
-62	172-48225-1	•PLATE - DROP TANK FUEL LINE DISC. FITTING RETURN PORT WING	371-	1
	172-48225-2	•PLATE - DROP TANK FUEL LINE DISC. FITTING RETURN STBD WING	371-	1
-63	172-48226	•PLATE ASSY - DROP FUEL TANK AIR LINE DISC. FITTING RETURN	371-	7
	AN507-428R14	•SCREW -		REF
-64	13B-64012-1	PLATE - DROP TANK FUEL & AIR LINE DISC. FITTING (SEE SECTION 1)		REF
-65	172-48831-305	LINE ASSY - FUEL (SEE FIG. 257)		REF
-66	172-48831-9	LINE ASSY - FUEL (SEE FIG. 257)		
		-000-		

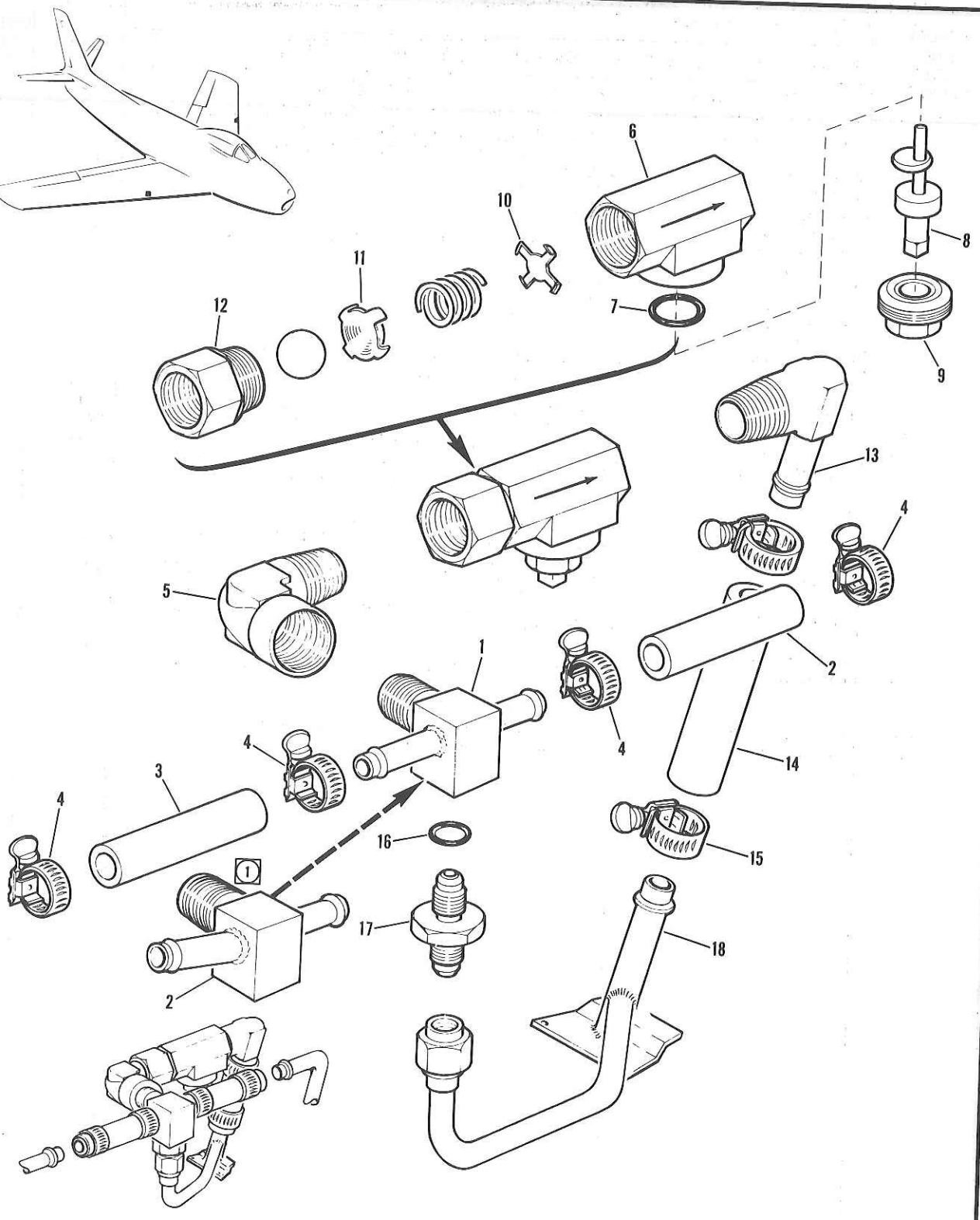

1 EFFECTIVE AIRCRAFT 23371 AND SUBSEQUENT

5E4B165D

FIGURE 260 DROP FUEL TANK RELIEF-VALVE

FIGURE AND INDEX NUMBER	GROUP FUEL SYSTEM MAJOR ASSEMBLY DROP FUEL TANK RELIEF-VALVE PART NUMBER	1234567 NOMENCLATURE	CODE	UNITS PER ASSY
260 -	172-48208-1	RELIEF-VALVE ASSY - DROP FUEL TANK PRESS. & THERMAL PORT WING (SEE FIG. 258)	001-370	1
	172-48208-851	RELIEF-VALVE ASSY - DROP FUEL TANK PRESS. & THERMAL PORT WING (AS PER EO 05-5E-6B/9) (SEE FIG.259)	371-	1
	172-48208-2	RELIEF-VALVE ASSY - DROP FUEL TANK PRESS. & THERMAL STBD WING (SEE FIG. 258)	001-370	1
	172-48208-852	RELIEF-VALVE ASSY - DROP FUEL TANK PRESS. & THERMAL STARBOARD WING (AS PER EO 05-5E-6B/9) (SEE FIG.259)	371-	1
- 1	172-48206	.FITTING ASSY - DROP FUEL TANK PRESSURE & THERMAL RELIEF-VALVE	001-370	1
- 2	172-48206-801	.FITTING ASSY - DROP FUEL TANK PRESSURE & THERMAL RELIEF-VALVE PORT WING	371-	1
	172-48206-802	.FITTING ASSY - DROP FUEL TANK PRESSURE & THERMAL RELIEF-VALVE STARBOARD WING	371-	1
- 3	3H2-6-13	.HOSE - (NAA)		2
- 4	AN737TW26	.CLAMP -		4
- 5	AN914-4	.ELBOW -		1
	13A-64112	.VALVE ASSY - DROP FUEL TANK PRESSURE & THERMAL RELIEF CHECK		1
- 6	13A-64113	..BODY - ADJUSTABLE CHECK VALVE		1
- 7	AF934-11	..PACKING - O-RING GASOLINE OR KEROSENE		1
- 8	13A-64114	..ECCENTRIC - ADJUSTABLE CHECK VALVE		1
- 9	13A-64116	..LOCK-NUT - ADJUSTABLE CHECK VALVE		1
-10	13A-64115	..GUIDE - ADJUSTABLE CHECK VALVE SPRING		1
	7-2847-79	..SPRING - (TAKEN FROM 7-2847-78M1 (PAC))		1
-11	10-242-1-1	..GUIDE - BALL(TAKEN FROM 7-2847-78M1(PAC))		1
	12-1241-13-20	..BALL - (TAKEN FROM 7-2847-78M1 (PAC))		1
-12	10-236-11	..CAP - (TAKEN FROM 7-2847-78M1 (PAC))		1
-13	AN842-10	.ELBOW -		1
-14	3H2-10-12	.HOSE - (NAA)		1
-15	AN737TW34	.CLAMP -		2
-16	AF934-89	.PACKING - O-RING GASOLINE OR KEROSENE	A49	1
	MS29512-6	.PACKING - O-RING HYDROCARBON FUEL RES	101-200	1
-17	170-48204	.RESTRICTOR - DROP FUEL TANK THERMAL RELIEF		1
-18	172-48812-1	.LINE ASSY - DROP FUEL TANK SUCTION & PRESSURE RELIEF PORT WING		1
	172-48812-2	.LINE ASSY - DROP FUEL TANK SUCTION & PRESSURE RELIEF STARBOARD WING		1

-000-

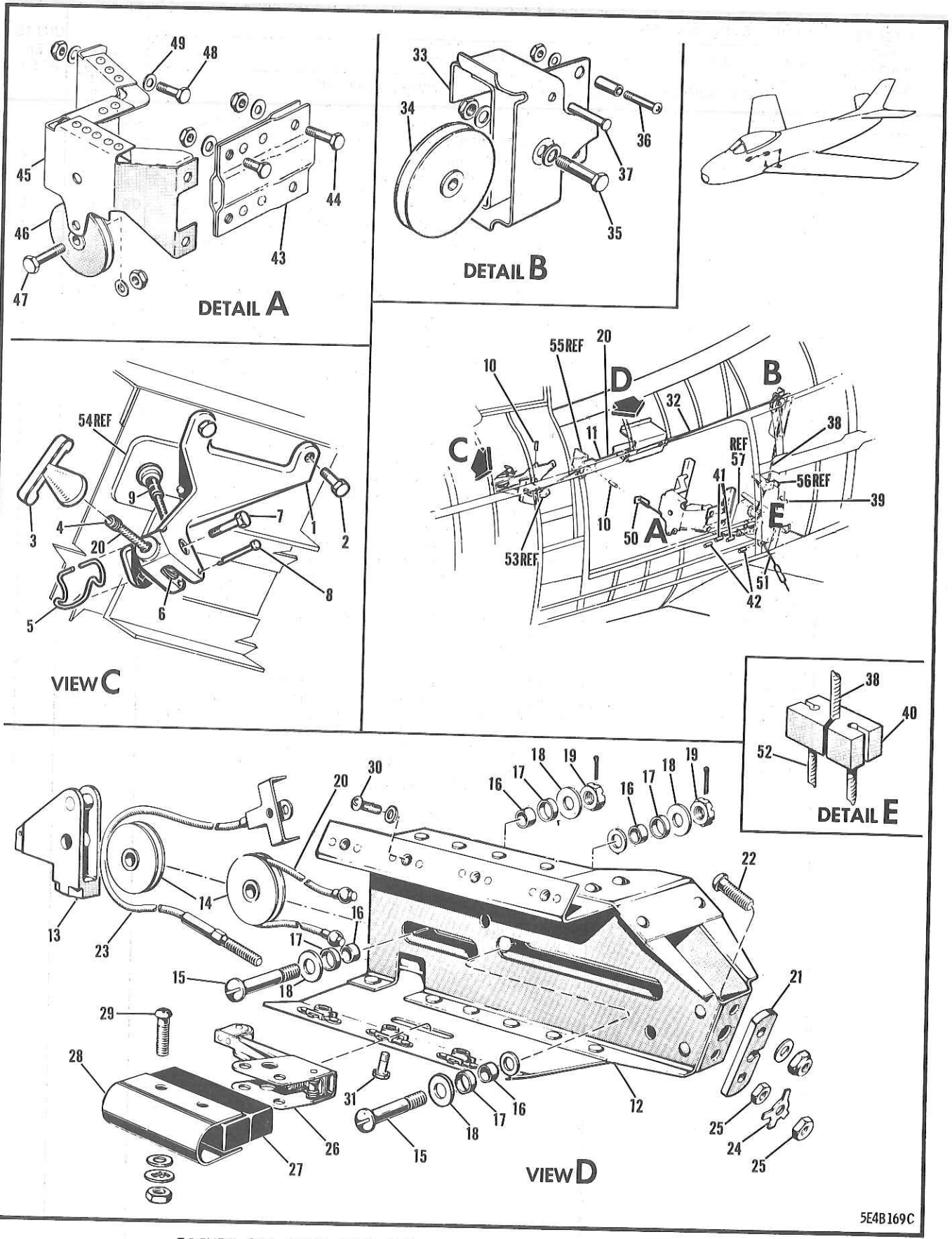

FIGURE 261 DROP FUEL TANK JETTISON MECHANISM (FUSELAGE)
(EFFECTIVE AIRCRAFT 23001 TO 23210 INCL)

FIGURE AND INDEX NUMBER	GROUP FUEL SYSTEM MAJOR ASSEMBLY DROP FUEL TANK JETTISON MECHANISM (FUSELAGE) PART NUMBER	1234567 NOMENCLATURE	CODE	UNITS PER ASSY
261 -	170-68701-50	MECHANISM INSTL - EMERGENCY JETTISON (FUSELAGE) (SEE FIG. 1)	001-210	NP
- 1	176-68737	•SUPPORT - EMERGENCY JETTISON HANDLE	001-210	1
- 2	AN4-7A	•BOLT - (SUPPORT ATTACHING)	001-210	3
	AN960D416	•WASHER -	001-210	3
	AN365-428	•NUT -	001-210	3
- 3	170-68730	•HANDLE ASSY - EMERGENCY JETTISON	001-210	1
- 4	170-68732	•RETAINER - EMERGENCY JETTISON CABLE	001-210	1
- 5	170-68731	•SPRING - EMERGENCY JETTISON HANDLE (LOCK)	001-210	1
- 6	AN210-1B	•PULLEY -	001-210	1
- 7	AN3-11A	•BOLT - MPI (PULLEY ATTACHING)	001-210	1
	AN960D10	•WASHER -	001-210	1
	AN365-1032	•NUT -	001-210	1
- 8	NAS427K12	•PIN -	001-210	1
- 9	3S10-7	•SEAL - CABLE 3/32-IN. ELASTIC PRESS. (NAA)	001-210	1
-10	NAS427K9	•PIN -	001-210	2
-11	170-68751-3	•TUBE - EMERGENCY JETTISON GUN-BAY CABLE GD	001-210	1
	AN742D10C	•CLAMP -	001-210	2
	AN520-10R8	•SCREW -	001-210	2
	AN960D10L	•WASHER -	001-210	2
	AN365-1032	•NUT -	001-210	2
	172-68705-10	•MECHANISM ASSY - EMERGENCY JETTISON MECH ADVANTAGE (FUS STA 92-100)	001-210	1
-12	172-68702	••BRACKET ASSY - EMERGENCY JETTISON MECHANICAL ADVANTAGE	001-210	1
-13	170-68750	••CLEVIS ASSY - EMERGENCY JETTISON MECHANICAL ADVANTAGE (LIMIT SW ACTE)	001-210	1
-14	AN210-1B	••PULLEY -	001-210	2
-15	AN23-19	••BOLT - MPI (PULLEY ATTACHING)	001-210	2
	AN960D10	••WASHER - (FORWARD PULLEY ONLY)	001-210	2
-16	NAS43C3-7	••SPACER -	001-210	4
-17	172-68704	••SPACER - EMERGENCY JETT MECH ADVANTAGE	001-210	4
-18	2W1AL12-24-64	••WASHER - PLAIN (NAA)	001-210	4
-19	AN320-3	••NUT -	001-210	2
	AN380-2-2	••COTTER-PIN -	001-210	2
-20	176-68706	••CABLE ASSY - EMERGENCY JETTISON FORWARD	001-210	1
-21	170-68728	••PLATE - EMERGENCY JETTISON MECHANICAL ADVANTAGE TERMINAL	001-210	1
-22	NAS221-10	••SCREW -	001-210	1
	AN960D10L	••WASHER -	001-210	1
	AN364-1032	••NUT -	001-210	1
-23	172-68703	••CABLE ASSY - EMERGENCY JETT MECHANICAL ADVANTAGE (REAR)	001-210	1
-24	2W11-3	••LOCK-WASHER - TAB (NAA)	001-210	1
-25	AN315-3R	••NUT -	001-210	2
-26	AN3169-1	••ACTUATOR - LIMIT SWITCH CLASS D	001-210	1
-27	AN3210-1	••SWITCH - LOW TRAVEL LIMIT	001-210	1
-28	8C4-3	••COVER - SWITCH PROTECTOR (NAA)	001-210	1
-29	AN515-6-18	••SCREW - (SWITCH TO ACTUATOR ATTACHING)	001-210	2
	AN960D6	••WASHER -	001-210	2
	AN936A6	••WASHER -	001-210	2
	AN340-6	••NUT -	001-210	2
-30	NAS221-9	•SCREW - MPI	001-210	2
	AN960D10L	•WASHER -	001-210	2
-31	AN3-5A	•BOLT - MPI	001-210	3
	AN960D10	•WASHER -	001-210	3
-32	170-68751-5	•TUBE - EMERGENCY JETTISON GUN-BAY CABLE GD	001-210	1
	AN742D10C	•CLAMP -	001-210	2
	AN520-10R8	•SCREW -	001-210	1
	AN960D10L	•WASHER -	001-210	1

FIGURE AND INDEX NUMBER	GROUP FUEL SYSTEM MAJOR ASSEMBLY DROP FUEL TANK JETTISON MECHANISM (FUSELAGE) PART NUMBER	1234567 NOMENCLATURE	CODE	UNITS PER ASSY
261 -	AN365-1032	•NUT -	001-210	1
-33	170-68723-10	•BRACKET ASSY - EMERGENCY JETT PUL STA 123	001-210	1
-34	AN210-2B	••PULLEY -	001-210	1
-35	AN3-7A	••BOLT - (PULLEY ATTACHING)	001-210	1
	AN960D10	••WASHER -	001-210	2
	AN365-1032	••NUT -	001-210	1
-36	NAS221-25	•SCREW - MPI	001-210	2
	NAS43DD-3-61	•SPACER -	001-210	2
	AN960D10L	•WASHER -	001-210	2
	AN365-1032	•NUT -	001-210	2
-37	NAS427K9	•PIN -	001-210	1
	170-68738	•CABLE ASSY - EMERGENCY JETT FUSELAGE INTER	001-210	1
-38	170-68738-3	••CABLE - EMERGENCY JETTISON FUSELAGE INTER	001-210	1
	AN664C3	••TERMINAL -	001-210	2
-39	NAS427K8	•PIN -	001-210	1
-40	170-68724	•DIVIDER - EMERGENCY JETTISON CABLE	001-210	1
-41	NAS427T8	•PIN -	001-210	2
-42	NAS427K9	•PIN -	001-210	2
-43	170-68742	•SUPPORT ASSY - EMERGENCY JETTISON WING CENTRE SECTION BRACKET	001-210	1
-44	AN4-5A	•BOLT - MPI (SUPPORT ATTACHING)	001-210	2
	AN960D416L	•WASHER -	001-210	2
	AN365-428	•NUT -	001-210	2
-45	170-68720	•BRACKET ASSY - EMERGENCY JETTISON WING CENTRE SECTION PULLEY	001-210	1
-46	AN210-2B	••PULLEY -	001-210	1
-47	AN3-7A	••BOLT - (PULLEY ATTACHING)	001-210	1
	AN960D10	••WASHER -	001-210	2
	AN365-1032	••NUT -	001-210	1
-48	AN4-5A	•BOLT - MPI (BRACKET ATTACHING)	001-210	4
	AN960D416	•WASHER -	001-210	4
-49	AN960D416L	•WASHER -	001-210	2
	AN365-428	•NUT -	001-210	2
	NAS427K9	•PIN -	001-210	1
-50	170-68748	•FAIRLEAD - EMERGENCY JETTISON CABLE WING CENTRE SECTION	001-210	1
	AN509-10R12	•SCREW -	001-210	2
	AN960D10	•WASHER -	001-210	2
	AN365-1032	•NUT -	001-210	2
	170-68737	•CABLE ASSY - EMERGENCY JETT FUS LOWER LH	001-210	1
	172-68739	•CABLE ASSY - EMERGENCY JETT FUS LOWER RH	001-210	1
-51	170-68737-3	••CABLE - EMERGENCY JETTISON FUS LOWER LH	001-210	1
-52	172-68739-3	••CABLE - EMERGENCY JETTISON FUS LOWER RH	001-210	1
	AN664C3	••TERMINAL -	001-210	1
	AN669L3RH	••TERMINAL - (USE ON LH CABLE ONLY)	001-210	1
	AN669L3LH	••TERMINAL - (USE ON RH CABLE ONLY)	001-210	1
-53	170-68729	BRACKET ASSY - EMERGENCY JETTISON PULLEY (FUSELAGE STA 72) (SEE SECTION 3)		REF
-54	176-68738	DOUBLER - EMERGENCY JETTISON CABLE SEAL (SEE SECTION 3)		REF
-55	170-68726	BRACKET ASSY - EMERGENCY JETTISON PULLEY (SEE SECTION 3)		REF
-56	170-68722	BRACKET ASSY - EMERGENCY JETTISON PULLEY (SEE SECTION 3)		REF
-57	170-68721	BRACKET ASSY - EMERGENCY JETTISON PULLEY (FUSELAGE STA 128) (SEE SECTION 3)		REF

(CONTINUED SEE FIG. 262)

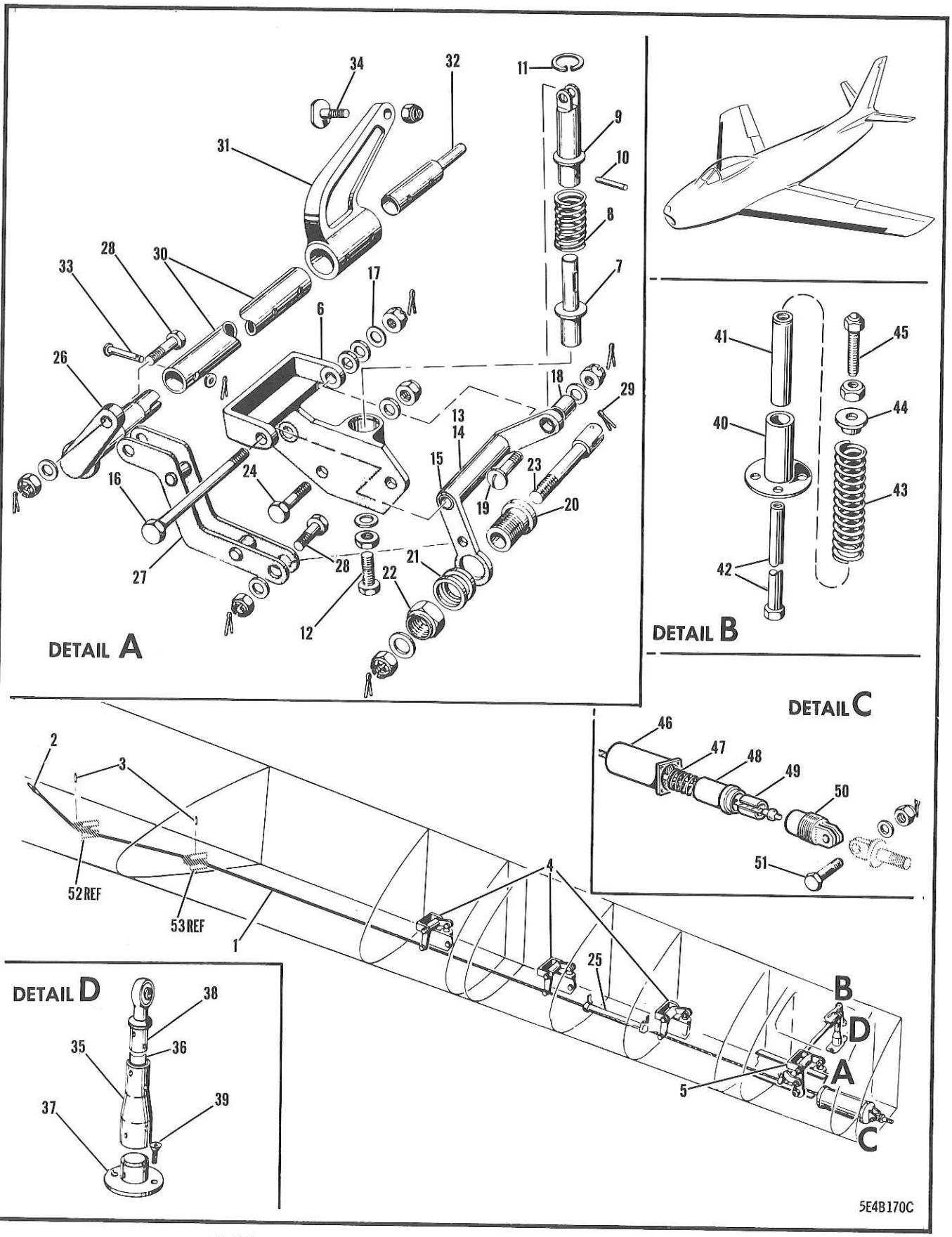

FIGURE 262 DROP FUEL TANK JETTISON MECHANISM (WING)
(EFFECTIVE AIRCRAFT 23001 TO 23210 INCL)

FIGURE AND INDEX NUMBER	GROUP FUEL SYSTEM MAJOR ASSEMBLY DROP FUEL TANK JETTISON MECHANISM (WING) PART NUMBER	1234567 NOMENCLATURE	CODE	UNITS PER ASSY
262 -	170-68701-50	MECHANISM INSTL - EMERGENCY JETTISON (SEE FIG. 261)	001-210	REF
- 1	170-68787	•CABLE ASSY - EMERGENCY JETT OUTER WING LH	001-210	1
	170-68786	•CABLE ASSY - EMERGENCY JETT OUTER WING RH	001-210	1
	170-68787-3	••CABLE - EMERGENCY JETTISON LH	001-210	1
	170-68786-3	••CABLE - EMERGENCY JETTISON RH	001-210	1
	AN669L3LH	••TERMINAL -	001-210	1
	AN669L3RH	••TERMINAL -	001-210	1
	AN663C3	••TERMINAL -	001-210	4
	AN664C3	••TERMINAL -	001-210	1
- 2	AN155-16L	•BARREL -	001-210	2
- 3	NAS427K9	•PIN -	001-210	5
- 4	170-68707-11	•MECHANISM ASSY - EMERGENCY JETT PLUNGER LH	001-210	3
	170-68707-12	•MECHANISM ASSY - EMERGENCY JETT PLUNGER RH	001-210	3
- 5	170-68707-15	•MECHANISM ASSY - EMERGENCY JETT PLUNGER LH	001-210	1
	170-68707-16	•MECHANISM ASSY - EMERGENCY JETT PLUNGER RH	001-210	1
- 6	170-68708-1	••SUPPORT - EMERGENCY JETT PLUNGER MECH LH	001-210	1
	170-68708-2	••SUPPORT - EMERGENCY JETT PLUNGER MECH RH	001-210	1
	170-68707-9	••MECHANISM ASSY - EMERGENCY JETT PLUNGER	001-210	1
- 7	170-68710	•••PISTON - EMERGENCY JETT PLUNGER MECH LWR	001-210	1
- 8	172-68707	•••SPRING - EMERGENCY JETT PLUNGER COMPR	001-210	1
- 9	170-68711	•••PISTON - EMERGENCY JETT PLUNGER MECH UP•	001-210	1
-10	170-68707-7	•••PIN - EMERGENCY JETT PLUNGER MECHANISM	001-210	1
-11	NAS50-87	••RING -	001-210	1
-12	NAS428-3-10	••BOLT - MPI (PISTON RETAINER)	001-210	1
	AN315-3	••NUT -	001-210	1
	AN960D516	••WASHER -	001-210	1
-13	170-68712-1	••BELL-CRANK ASSY - EMERGENCY JETT PLUNGER MECHANISM LH (ON 170-68707-11)	001-210	1
	170-68712-2	••BELL-CRANK ASSY - EMERGENCY JETT PLUNGER MECHANISM RH (ON 170-68707-12)	001-210	1
-14	170-68712-5	••BELL-CRANK ASSY - EMERGENCY JETT PLUNGER MECHANISM LH (ON 170-68707-15)	001-210	1
	170-68712-6	••BELL-CRANK ASSY - EMERGENCY JETT PLUNGER MECHANISM RH (ON 170-68707-16)	001-210	1
-15	4B16CF4-18	•••BUSHING - SINTERED OIL IMPREGNATED (NAA)	001-210	2
-16	AN4-31	••BOLT - (BELL-CRANK PIVOT)	001-210	1
-17	AN960D416L	••WASHER -	001-210	2
	AN960D416	••WASHER -	001-210	1
	AN310-4	••NUT -	001-210	1
	AN380-2-3	••COTTER-PIN -	001-210	1
-18	4B21S3-007	••BUSHING - SPACER (NAA)	001-210	1
-19	AN23-11	••BOLT - (UPPER PISTON & BELL-CRANK ATT)	001-210	1
	AN960D10	••WASHER -	001-210	1
	AN320-3	••NUT -	001-210	1
	AN380-2-2	••COTTER-PIN -	001-210	1
-20	170-68713	••SLEEVE - EMERGENCY JETTISON PLUNGER MECH	001-210	1
-21	170-68714	••WASHER - EMERGENCY JETTISON PLUNGER MECH	001-210	1
	AN960-816	••WASHER - (FOR ATT 170-68712-1 & -2 ONLY)	001-210	1
-22	AN364-820	••NUT -	001-210	1
-23	170-68715	••SWIVEL - EMERGENCY JETT PLUNGER MECHANISM	001-210	1
	AN960C416L	••WASHER -	001-210	1
	AN320-4	••NUT -	001-210	1
	AN380-2-3	••COTTER-PIN -	001-210	1
-24	AN4-6A	•BOLT - MPI (MECHANISM SUPPORT TO SPAR ATT)	001-210	24
	AN960D416	•WASHER -	001-210	24
	AN365-428	•NUT -	001-210	24
-25	170-68740	•TUBE - EMERGENCY JETT CABLE GUIDE	001-210	2
	AN742D10C	•CLAMP - (CABLE GUIDE TUBE TO NOSE RIB ATT)	001-210	4
	AN3-4A	•BOLT - MPI	001-210	4

FIGURE AND INDEX NUMBER	GROUP FUEL SYSTEM MAJOR ASSEMBLY DROP FUEL TANK JETTISON MECHANISM (WING)		CODE	UNITS PER ASSY
	PART NUMBER	1234567 NOMENCLATURE		
262 -	AN960D10	•WASHER -	001-210	4
	AN365-1032	•NUT -	001-210	4
-26	170-68743-10	•BELL-CRANK - EMERGENCY BOMB & TANK JETT FORWARD (TORQUE TUBE END)	001-210	2
-27	170-68759	•LINK ASSY - EMERGENCY BOMB & TANK JETT LE	001-210	2
	4B21B3-007	•BUSHING - SPACER (NAA)	001-210	4
-28	AN23-11	•BOLT - MPI (LINK END ATTACHING)	001-210	4
	AN960D10	•WASHER -	001-210	4
	AN310-3	•NUT -	001-210	4
	AN380-2-2	•COTTER-PIN -	001-210	4
-29	AN380-2-3	•COTTER-PIN - (CABLE RETAINER)	001-210	8
	170-63205-11	•TORQUE TUBE ASSY - BOMB RELEASE MECH LH	001-210	1
	170-63205-12	•TORQUE TUBE ASSY - BOMB RELEASE MECH RH	001-210	1
-30	170-63206	••TORQUE TUBE - BOMB RELEASE MECHANISM	001-210	1
-31	170-63208	••ARM - BOMB RELEASE MECHANISM PLUNGER OPR	001-210	1
-32	170-63209	••FITTING - BOMB RELEASE MECH TORQUE TUBE	001-210	1
-33	AN393-21	••PIN -	001-210	1
	AN960D10L	••WASHER -	001-210	1
	AN380-2-1	••COTTER-PIN -	001-210	1
-34	170-63207	••PLUG - TANK & BOMB RELEASE MECH PLUNGER	001-210	1
	AN365-428	••NUT -	001-210	1
	170-63210	•SUPPORT ASSY - BOMB RELEASE MECHANISM POST	001-210	1
-35	170-63211	••POST - BOMB RELEASE MECHANISM SUPPORT (TORQUE TUBE)	001-210	2
-36	170-63210-3	••PLUG - (POST UPPER END)	001-210	1
-37	170-63212	••FITTING - TANK & BOMB RELEASE POST SUP. (STRUCTURAL ATTACHMENT)	001-210	1
-38	F4W-19	••ROD-END - UNIBAL SPHERICAL BEARING (HEC)	001-210	1
-39	AN509-10R10	•SCREW - MPI	001-210	4
	170-68758	•PLUNGER ASSY - EMY JETT TANK & BOMB REL	001-210	2
-40	170-68754	••GUIDE - EMERGENCY JETTISON TANK & BOMB RELEASE PLUNGER	001-210	1
-41	170-68755	••SUPPORT - EMERGENCY JETTISON TANK & BOMB RELEASE PLUNGER	001-210	1
-42	170-68756	••PLUNGER - EMY JETTISON TANK & BOMB REL	001-210	1
-43	170-68757	••SPRING - COMPRESSION (PLUNGER TENSION)	001-210	1
-44	170-68767	••RETAINER - EMERGENCY JETTISON TANK & BOMB REL PLUNGER SPRING	001-210	1
-45	170-68768	••BOLT ASSY - EMERGENCY JETT TANK & BOMB RELEASE PLUNGER (ADJUSTABLE)	001-210	1
	AN315-3	••NUT -	001-210	1
	AN507-632R6	•SCREW - (PLUNGER GUIDE TO STRUCTURE ATT)	001-210	6
-46	161-68704	•CYLINDER - EMERGENCY JETT CABLE RET BUNGEE	001-210	2
-47	170-68706	•SPRING - COMPRESSION	001-210	2
-48	161-68705	•PISTON - EMERGENCY JETT CABLE RET BUNGEE	001-210	2
-49	161-68703	•SLEEVE - EMY JETTISON CABLE BUNGEE PISTON	001-210	2
-50	161-68706	•END - EMERGENCY JETTISON CABLE RETURN BUNGEE CYLINDER	001-210	2
-51	AN23-12	•BOLT - MPI (END TO EYE-BOLT ATTACHING)	001-210	2
	AN960D10	•WASHER -	001-210	2
	AN310-3	•NUT -	001-210	2
	AN380-2-2	•COTTER-PIN -	001-210	2
-52	170-68717-5	BRACKET ASSY - EMERGENCY JETTISON STA 44 LH (SEE SECTION 1)		REF
-53	170-68719	BRACKET ASSY - EMERGENCY JETT WING STA 54 (SEE SECTION 1)		REF

-000-

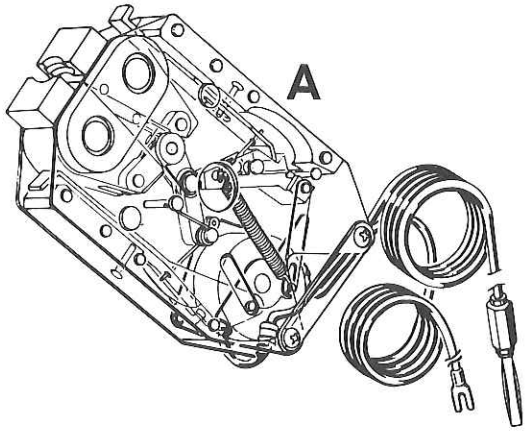

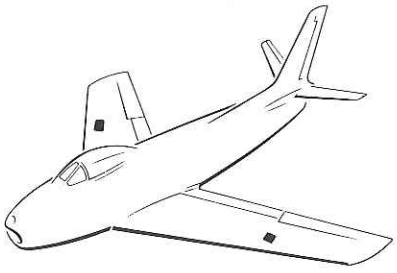

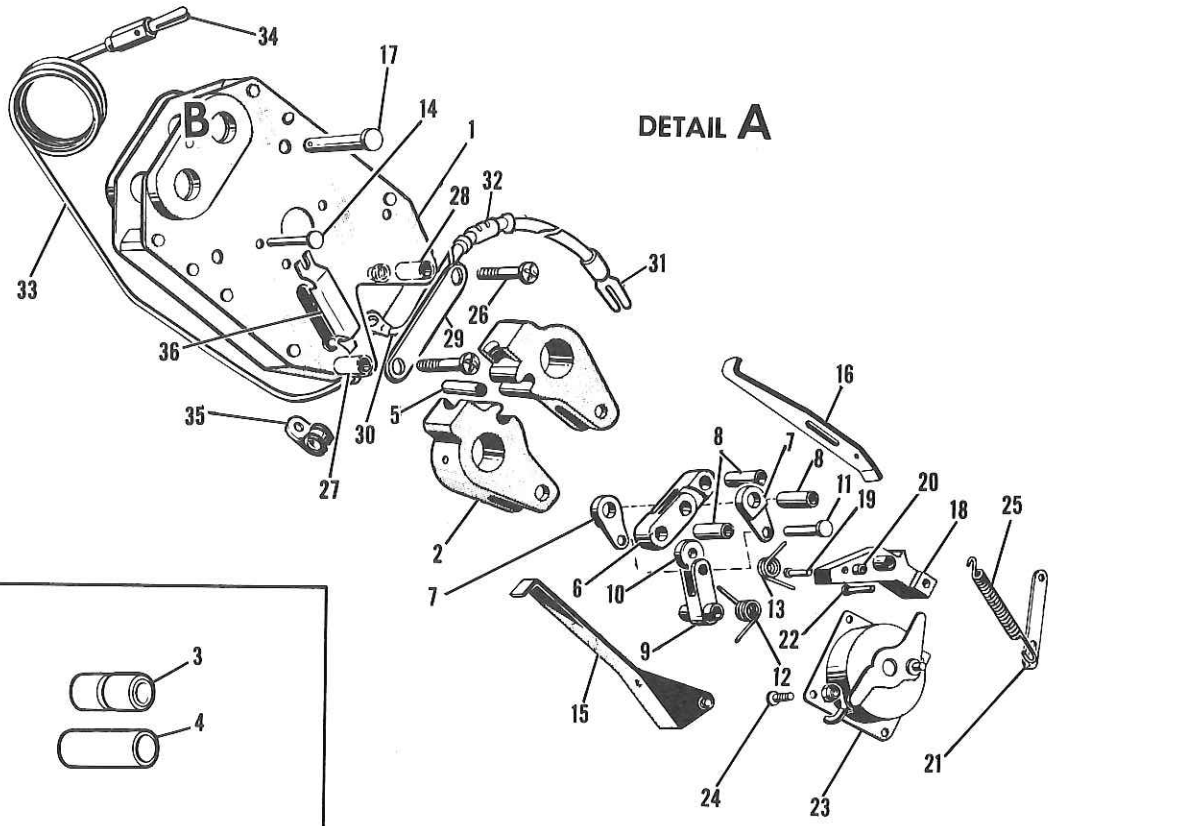

DETAIL B

EFFECTIVE ON 168 IMPERIAL (200 U.S.) GAL TANK ONLY

5E4B168B

FIGURE 263 DROP FUEL TANK RELEASE MECHANISM

FIGURE AND INDEX NUMBER	GROUP FUEL SYSTEM MAJOR ASSEMBLY DROP FUEL TANK RELEASE MECHANISM PART NUMBER	1234567 NOMENCLATURE	CODE	UNITS PER ASSY
263 -	151-48320-900	SHACKLE ASSY - FUEL DROP TANK (SEE FIG.264) (FOR USE ON 100 IMPERIAL (120 U.S.) GALLON DROP TANK ONLY)	A	1
	175-48320	MECHANISM ASSY - FUEL DROP TANK RELEASE (SEE FIG. 268) (FOR USE ON 167 IMP. (200 U.S.) GALLON DROP TANK ONLY)	B	1
- 1	151-48314	.HOUSING ASSY - DROP TANK SHACKLE	A	1
	175-48314	.HOUSING ASSY - FUEL TANK RELEASE MECHANISM	B	1
- 2	13-64071-3	.JAW - FUEL DROP TANK SHACKLE MPI	AB	2
- 3	NAS72-7106	.BUSHING -	A	2
- 4	4B21S8-112	.BUSHING - SPACER (NAA)	B	2
- 5	151-48325	.PIN - DROP TANK SHACKLE TOGGLE LINK	AB	1
- 6	151-48316	.LINK - DROP TANK SHACKLE TOGGLE MPI	A	2
	175-48316	.LINK - DROP TANK RELEASE TOGGLE MPI	B	2
- 7	151-48317	.LINK - DROP TANK SHACKLE TOGGLE CONN MPI	A	2
	175-48317	.LINK - FUEL TANK RELEASE TOGGLE CONN MPI	B	2
- 8	151-48325	.PIN - DROP TANK SHACKLE TOGGLE LINK	AB	3
- 9	151-48318	.LINK ASSY - DROP TANK SHACKLE ROLLER MPI	A	1
	175-48318	.LINK ASSY - FUEL TANK RELEASE ROLLER MPI	B	1
-10	AN201KP3A	.BEARING -	AB	1
		OR		
	AN200K3L	.BEARING -	AB	
		OR		
	AN200KS3L	.BEARING -	AB	
-11	AN393-23	.PIN -	AB	1
	AN380-2-2	.COTTER-PIN -	AB	1
-12	151-48322	.SPRING - DROP TANK SHACKLE RELEASE	A	2
	151-48322	.SPRING - DROP TANK SHACKLE RELEASE	B	1
-13	176-48311	.SPRING - DROP TANK SHACKLE RELEASE	B	1
-14	AN393-41	.PIN -	AB	4
	AN380-2-2	.COTTER-PIN -	AB	4
-15	151-48324	.ARM ASSY - DROP TANK SHACKLE RELEASE	A	1
	175-48324	.ARM ASSY - DROP TANK RELEASE MECHANISM	B	1
-16	151-48323	.ARM - DROP TANK SHACKLE LOCK TEST	AB	1
-17	AN395-41	.PIN -	AB	2
	AN380-3-3	.COTTER-PIN -	AB	2
-18	151-48319	.ROCKER - DROP TANK SHACKLE MPI	A	1
	175-48322	.ROCKER - DROP TANK RELEASE MECHANISM MPI	B	1
-19	AN392-17	.PIN -	AB	1
-20	4S4-4-6	.SPACER - RIVET (NAA)	A	1
	NAS42DD-4-12	.SPACER -	B	1
	AN380-2-2	.COTTER-PIN -	A	2
-21	109-63035	.LINK - WING BOMB RACK	AB	1
-22	AN392-17	.PIN -	AB	1
	AN380-2-2	.COTTER-PIN -	AB	1
-23	C8001-1	.SOLENOID - (LEL)	AB	1
-24	NAS220-8	.SCREW -	AB	3
	AN365-832	.NUT -	AB	3
-25	151-48321	.SPRING - DROP TANK SHACKLE ROCKER & SOL	AB	1
-26	NAS220-24	.SCREW -	AB	2
-27	4S3-8-33	.SPACER - SCREW & BOLT (NAA)	A	1
	NAS43DD-3-65	.SPACER -	B	1
-28	4S3-8-36	.SPACER - SCREW & BOLT (NAA)	A	1
	NAS43DD-3-72	.SPACER -	B	1
	AN364-832	.NUT -	AB	2
-29	176-48313	.STRIP - DROP TANK SHACKLE RELEASE	AB	1
	172-54408	.WIRE ASSY - DROP TANK SHACKLE ELECTRICAL SOLENOID GROUND	AB	1
-30	AN659-2	..TERMINAL -	AB	1

A (FOR USE ON 100 IMP. (120 U.S.) GALLON TANKS ONLY)

B (FOR USE ON 167 IMP. (200 U.S.) GALLON TANKS ONLY)

AB (FOR USE ON BOTH 100 IMP. (120 U.S.) AND 167 IMP. (200 U.S.) GALLON TANKS)

FIGURE AND INDEX NUMBER	GROUP FUEL SYSTEM MAJOR ASSEMBLY DROP FUEL TANK RELEASE MECHANISM PART NUMBER	1234567 NOMENCLATURE	CODE	UNITS PER ASSY
263 -31	YAV14-H34F	••CONNECTOR - ELECTRICAL HYLUG (BEC)	AB	1
		OR		
-	AMP32051	••CONNECTOR - (AMP)		
-32	AN753-1	••SPLICE - (COUPLER TO REMAIN ON LONG END WHEN DISCONNECTED)	AB	1
-33	151-48320-5	•TUBING - SURCO	A	1
	175-48320-3	•TUBING - PLASTIC	B	1
-34	172-54022	•PLUG - ELEC DROP TANK SHACKLE ASSY DISC•	B	1
-35	AN742D5C	•CLAMP -	AB	1
-36	176-48325	•COVER - DROP TANK SHACKLE RELEASE SLIDE	B	1
		-000-		
	A	(FOR USE ON 100 IMP. (120 U.S.) GALLON TANKS ONLY)		
	B	(FOR USE ON 167 IMP. (200 U.S.) GALLON TANKS ONLY)		
	AB	(FOR USE ON BOTH 100 IMP. (120 U.S.) AND 167 IMP. (200 U.S.) GALLON TANKS)		



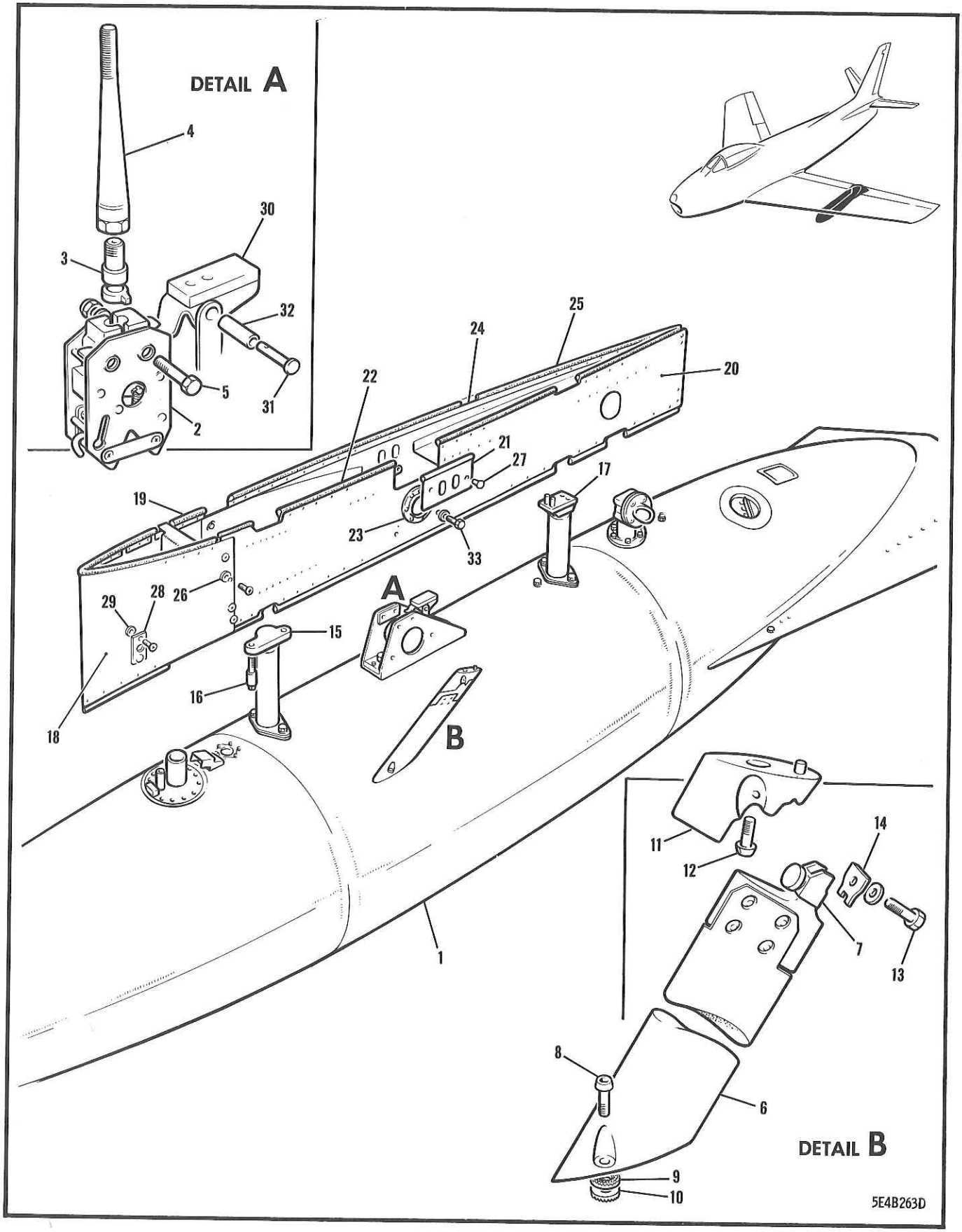

FIGURE 264 100-GALLON DROP FUEL TANK EQUIPMENT

FIGURE AND INDEX NUMBER	GROUP / MAJOR ASSEMBLY / PART NUMBER	FUEL SYSTEM / 100-GALLON DROP FUEL TANK EQUIPMENT / 1234567 NOMENCLATURE	CODE	UNITS PER ASSY
264 -	172-48201-1	TANK INSTL - FUEL DROP (100 IMP. (120 U.S.) GALLON PORT WING) (SEE FIG. 1) (AIRCRAFT 19655-19840 DELIVERED WITH RCAF SPARE TANKS AIRCRAFT 19841-19890 DELIVERED WITHOUT TANKS)		NP
	172-48201-913	SPARE PART INSTL FOR 172-48201-1		
	172-48201-915	SPARE PART INSTL FOR 172-48201-1		
	172-48201-2	TANK INSTL - FUEL DROP (100 IMP. (120 U.S.) GALLON STARBOARD WING) (SEE FIG. 1) (AIRCRAFT 19655-19840 DELIVERED WITH RCAF SPARE TANKS AIRCRAFT 19841-19890 DELIVERED WITHOUT TANKS)		NP
	172-48201-914	SPARE PART INSTL FOR 172-48201-2		
	172-48201-916	SPARE PART INSTL FOR 172-48201-2		
- 1	161-48250-11	.TANK ASSY - 100 IMPERIAL (120 U.S.) GALLON FUEL (SEE FIG. 265)		REF
- 2	151-48320-900	.SHACKLE ASSY - DROP TANK (SEE FIG. 263)		REF
- 3	151-48379	.STUD - FUEL DROP TANK SUPPORT (FOR USE ON 100 IMP. (120 U.S.) GAL TANK ONLY)		1
- 4	151-48378	.POST - FUEL DROP TANK SUPPORT (FOR USE ON 100 IMP. (120 U.S.) GAL TANK ONLY)		1
- 5	AN27-38A	.BOLT -		2
	AN960D716	.WASHER -		4
	AN364-720	.NUT -		2
	170-48306-1	.SWAY-BRACE ASSY - 100 IMPERIAL (120 U.S.) GALLON DROP TANK (PORT WING)		1
	170-48306-2	.SWAY-BRACE ASSY - 100 IMPERIAL (120 U.S.) GALLON DROP TANK (STARBOARD WING)		1
- 6	170-48305-1	..SWAY-BRACE - DROP TANK (PORT WING)		1
	170-48305-2	..SWAY-BRACE - DROP TANK (STARBOARD WING)		1
- 7	170-48314-3	..FITTING - DROP TANK STRUT DISCONNECT OR		1
	170-48314-5	..FITTING - DROP TANK STRUT DISCONNECT		
	170-48312	..DECALCOMANIA - SINGLE SWAY-BRACE		1
- 8	NAS145DH16	.BOLT - (SWAY-BRACE TO TANK ATTACHING)		1
	172-48311-960	.WASHER ASSY - SWAY-BRACE SERRATED		1
- 9	172-48311-3	..WASHER - SWAY-BRACE SERRATED		1
-10	172-48311-5	..WASHER - SWAY-BRACE SERRATED		1
	170-48313-5	.FITTING ASSY - WING STRUT ATTACHMENT DISCONNECT (PORT WING FORWARD)		1
	170-48313-6	.FITTING ASSY - WING STRUT ATTACHMENT DISCONNECT (STARBOARD WING FORWARD)		1
-11	170-48313-3	..FITTING - STRUT ATTACHMENT DISCONNECT (PORT WING)		1
	170-48313-4	..FITTING - STRUT ATTACHMENT DISCONNECT (STARBOARD WING)		1
	170-48307	..PIN - WING STRUT ATTACHMENT DISCONNECT		1
-12	NAS148DH21	.BOLT - (FITTING TO WING ATTACHING)		1
-13	AN4H4A	.BOLT - (SWAY-BRACE TO FITTING ATTACHING)		1
-14	170-48302	.RETAINER - DISCONNECT FITTING		1
	221-48302-950	.SPARE PART FOR 170-48302		
-15	176-48303-3	.PAD - DROP TANK FORWARD POST (PORT WING)		1
	176-48303-4	.PAD - DROP TANK FORWARD POST (STBD WING)		1
-16	176-48299	.SHEAR-PIN - DROP TANK FORWARD		1
-17	161-48341-51	.PAD ASSY - DROP TANK REAR POST BEARING		1
	172-48261-901	.FAIRING ASSY - DROP TANK (PORT WING)		1
	191-48261-955	.SPARE PART ASSY FOR 172-48261-901		1
	172-48261-902	.FAIRING ASSY - DROP TANK (STARBOARD WING)		1
	191-48261-956	.SPARE PART ASSY FOR 172-48261-902		1
	172-48261-51	..FAIRING ASSY - DROP TANK (PORT WING)		1
	172-48261-52	..FAIRING ASSY - DROP TANK (STARBOARD WING)		1
-18	172-48261-7	...SKIN - DROP TANK FAIRING (PORT WING)		1
	172-48261-8	...SKIN - DROP TANK FAIRING (STBD WING)		1
-19	5W1-4-17-8	...SEAL - WEATHER (NAA)		1

FIGURE AND INDEX NUMBER	GROUP FUEL SYSTEM MAJOR ASSEMBLY 100-GALLON DROP FUEL TANK EQUIPMENT PART NUMBER	1234567 NOMENCLATURE	CODE	UNITS PER ASSY
264 -	5W1-4-30-8	•••SEAL - WEATHER (NAA)		1
	172-48261-79	••FAIRING ASSY - DROP TANK (PORT WING)		1
	172-48261-80	••FAIRING ASSY - DROP TANK (STARBOARD WING)		1
-20	172-48261-75	•••SKIN - DROP TANK FAIRING (PORT WING)		1
	172-48261-76	•••SKIN - DROP TANK FAIRING (STBD WING)		1
-21	172-48261-53	•••DOOR ASSY - DROP TANK FAIR• (PORT WING)		1
	172-48261-54	•••DOOR ASSY - DROP TANK FAIR• (STBD WING)		1
	5W1-4-6-11	••••SEAL - WEATHER (NAA)		1
	S•P•1561-8-32-8	•••SEMS - FAIRING WASHER (SHI)		1
-22	5W1-4-14-8	•••SEAL - WEATHER (NAA)		1
	5W1-4-29-4	•••SEAL - WEATHER (NAA)		1
	5W1-4-50-6	•••SEAL - WEATHER (NAA)		1
-23	161-48261-950	••WINDOW - DROP TANK FAIRING		1
	161-48261-952	••RETAINER - DROP TANK FAIRING WINDOW		1
	161-48261-954	••DECALCOMANIA - DROP TANK FAIRING WINDOW		1
	161-48261-956	••DECALCOMANIA - DROP TANK FAIRING WINDOW		1
	2W1SR95-56-64	••WASHER - PLAIN (NAA)		1
	172-48261-55	••FAIRING ASSY - DROP TANK (PORT WING)		1
	172-48261-78	••FAIRING ASSY - DROP TANK (STARBOARD WING)		1
-24	172-48261-3	•••SKIN - DROP TANK FAIRING (PORT WING)		1
	172-48261-74	•••SKIN - DROP TANK FAIRING (STBD WING)		1
-25	5W1-4-50-8	•••SEAL - WEATHER (NAA)		1
	5W1-4-50	•••SEAL - WEATHER (NAA)		1
-26	S•P•1561-8-32-8	••SEMS - FAIRING WASHER (SHI)		1
-27	48152	••BUTTON - STANDARD PLUG (UCF)		10
-28	172-48294	•COVER-PLATE ASSY - PRESSURE RELIEF OUTLET		1
-29	S•P•1561-8-32-8	•SEMS - FAIRING WASHER (SHI)		1
-30	170-48308-5	•LEVER ASSY - MANUAL DROP TANK JETTISON		4
-31	AN393-39	•PIN -		1
-32	NAS43C-3-66	•SPACER -		1
	AN380-2-2	•COTTER-PIN -		1
-33	AN3-22A	•BOLT -		1
	2W1-14-20-32	•WASHER - PLAIN (NAA)		2
	AN364-1032	•NUT -		4
				2

-000-

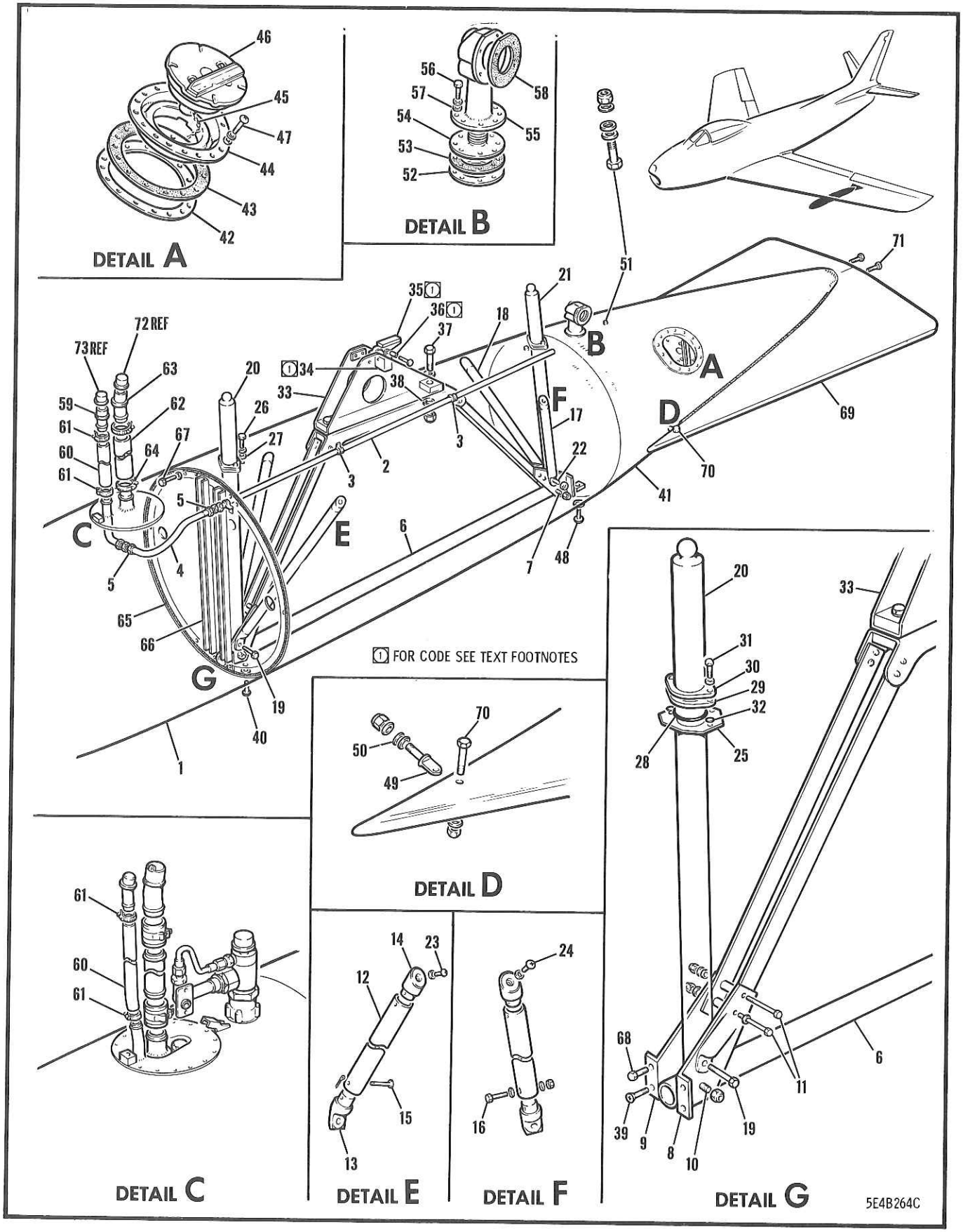

FIGURE 265 100-GALLON DROP FUEL TANK

FIGURE AND INDEX NUMBER	GROUP FUEL SYSTEM MAJOR ASSEMBLY 100-GALLON DROP FUEL TANK PART NUMBER	1234567 NOMENCLATURE	CODE	UNITS PER ASSY
265 -	161-48250-11	TANK ASSY - 100 IMPERIAL (120 U.S.) GALLON FUEL DROP (SEE FIG. 264) (TANK SERIAL NO. 1 TO 466)	A	1
	161-48250-31	TANK ASSY - 100 IMPERIAL (120 U.S.) GALLON FUEL DROP(TANK SERIAL NO.467 TO 610) (611 TO 1235 DELIVERED AS SPARES)	B	1
	172-48250	TANK ASSY - 100 IMPERIAL (120 U.S.) GALLON FUEL DROP (TANK SERIAL NO. HR1201 TO HR1696) (HR1697 TO HR5557 DELIVERED AS SPARES)	C	1
- 1	161-48251	.TANK ASSY - FORWARD SECTION FUEL DROP (SEE FIG. 266)		REF
	172-48251	.COMPARTMENT ASSY - FUEL DROP TANK FORWARD (SEE FIG. 266)	C	REF
	161-48252	.TANK ASSY - INTERMEDIATE SECTION FUEL DROP	A	1
	161-48252-91	.TANK ASSY - INTERMEDIATE SECTION FUEL DROP		1
	161-48298	..TRUSS ASSY - DROP TANK	ABC	1
- 2	161-48298-19	...LINE ASSY - DROP TANK TRUSS	AB	1
	161-48298-950	...LINE ASSY - DROP TANK TRUSS	C	1
- 3	AN742D8	...CLAMP -	ABC	2
	AN520-10R12	...SCREW -	ABC	2
	4S3D10-8	...SPACER - BOLT (NAA)	ABC	2
	AN365-1032	...NUT -	ABC	2
	161-48257	...RETAINER - TRUSS NUT		2
	AN365-918	...NUT -	ABC	2
- 4	AN6264-8D13	...HOSE ASSY - DTCH END SWIVEL TYPE FITTING	ABC	1
- 5	AN815-8D	...UNION -	ABC	2
- 6	161-48298-3	...TUBE - DROP TANK TRUSS	ABC	1
- 7	AN8-25A	...BOLT -	ABC	1
	AN365-820	...NUT -	ABC	1
- 8	161-48298-9	...BRACE - DROP TANK TRUSS LH	ABC	1
- 9	161-48298-10	...BRACE - DROP TANK TRUSS RH	ABC	1
-10	AN10-26A	...BOLT -	ABC	1
	AN365-1018	...NUT -	ABC	1
-11	AN5-23A	..BOLT -	ABC	2
	NAS43-5-76	..SPACER -	ABC	2
	AN960D516	..WASHER -	ABC	4
	AN365-524	..NUT -	ABC	2
	161-48315-1	..SWAY-BRACE ASSY - DROP TANK FORWARD INTERNAL LH	ABC	1
	161-48315-2	..SWAY-BRACE ASSY - DROP TANK FORWARD INTERNAL RH	ABC	1
-12	161-48314-3	...TUBE - INTERNAL SWAY-BRACE	ABC	1
-13	161-48312	...FITTING - INTERNAL SWAY-BRACE ATTACHING	ABC	1
-14	161-48313	...FITTING - INTERNAL SWAY-BRACE UPPER	ABC	1
-15	AN392-37	...PIN - (TUBE TO FITTING ATTACHING)	A3	2
	AN960D4	...WASHER -	A3	2
	AN380-2-3	...COTTER-PIN -	A3	2
-16	AN4-15A	...BOLT - (TUBE TO FITTING ATTACHING)	A4	2
	AN960D416	...WASHER -	A4	4
	AN365-428	...NUT -	A4	2

A	(TANK SERIAL NO. 1-466)
AB	(TANK SERIAL NO. 1-610) & (611-1235 DELIVERED AS SPARES)
ABC	(TANK SERIAL NO. 1-610) & (611-1235 DELIVERED AS SPARES) & (TANK SERIAL NO. HR1201-HR1696) & (HR1697-HR5557 DELIVERED AS SPARES)
A3	(TANK SERIAL NO. 1-140)
A4	(TANK SERIAL NO. 141-610 & HR1201-HR1696)
B	(TANK SERIAL NO. 467-610) & (611-1235 DELIVERED AS SPARES)
C	(TANK SERIAL NO. HR1201-HR1696) & (HR1697-HR5557 DELIVERED AS SPARES)

FIGURE AND INDEX NUMBER	GROUP FUEL SYSTEM MAJOR ASSEMBLY 100-GALLON DROP FUEL TANK PART NUMBER	1234567 NOMENCLATURE	CODE	UNITS PER ASSY
265 -17	161-48319-1	••SWAY-BRACE ASSY - DROP TANK INT REAR LH	A	1
-18	161-48319-2	••SWAY-BRACE ASSY - DROP TANK INT REAR RH	A	1
	161-48314-5	•••TUBE - DROP TANK INT REAR SWAY-BRACE	A	1
	161-48316	•••FITTING - DROP TANK INT REAR SWAY-BRACE	A	1
	161-48317	•••FITTING - DROP TANK INT REAR SWAY-BRACE	A	1
	AN392-37	•••PIN -	A	2
	AN960D4	•••WASHER -	A	2
	AN380-2-3	•••COTTER-PIN -	A	2
-19	AN8-30A	••BOLT -	ABC	1
	AN365-820	••NUT -	ABC	1
-20	161-48271-3	••POST - DROP TANK FORWARD SUPPORT	ABC	1
-21	161-48271-5	••POST - DROP TANK REAR SUPPORT	ABC	1
	172-48282	••CLIP - DROP TANK SWAY-BRACE	C	2
-22	AN5-26A	••BOLT -	A	1
	AN5-22A	••BOLT -	BC	1
	AN365-524	••NUT -	ABC	1
-23	NAS223-9	••SCREW -	ABC	2
	AN960D516L	••WASHER -	ABC	2
	205AC-5/16	••LOCK-O-SEAL - AROMATIC FUEL (WFC)	ABC	2
-24	NAS222-9	••SCREW -	A	2
	205AC-1/4	••LOCK-O-SEAL - AROMATIC FUEL (WFC)	A	2
-25	161-48323	••RETAINER ASSY - DROP TANK PLATE NUT	ABC	2
-26	AN3-6A	••BOLT -	ABC	2
	AN960D10	••WASHER -	ABC	2
-27	205AC-10	••LOCK-O-SEAL - AROMATIC FUEL (WFC)	ABC	2
-28	AF934-27	••PACKING - O-RING GASOLINE OR KEROSENE	ABC	2
-29	161-48275-3	••RETAINER - DROP TANK POST SEAL	ABC	2
-30	161-48275-5	••RETAINER - DROP TANK POST SEAL	ABC	2
-31	AN3-11A	••BOLT -	ABC	4
	AN960D10	••WASHER -	ABC	4
-32	AF934-3	••PACKING - O-RING GASOLINE OR KEROSENE	ABC	4
-33	161-48259	••BRACKET ASSY - DROP TANK RELEASE MECH	A	1
	161-48259-31	••BRACKET ASSY - DROP TANK RELEASE MECH	BC	1
-34	170-48310	•••BRACKET - MANUAL DROP TANK JETTISON	BC	1
-35	170-48308-5	•••LEVER ASSY - MANUAL DROP TANK JETTISON	BC	1
	AN393-39	•••PIN -	BC	1
-36	NAS43C-3-66	•••SPACER -	BC	1
	AN380-2-2	•••COTTER-PIN -	BC	1
-37	AN9-20A	••BOLT - (BRACKET ATTACHING)	ABC	2
	AN960D916	••WASHER -	ABC	2
-38	AF934-11	••PACKING - O-RING GASOLINE OR KEROSENE	ABC	2
-39	AN509-416R11	••SCREW -	ABC	4
	AN365-428	••NUT -	ABC	4
-40	161-48322	••SCREW - DROP TANK DRAIN	ABC	1
	205AC-1/4	••LOCK-O-SEAL - AROMATIC FUEL (WFC)	ABC	1
	AN960D416L	••WASHER -	BC	1
	161-48250-904	•DECALCOMANIA - DROP TANK	AB	2
	161-48250-902	•DECALCOMANIA - DROP TANK	AB	2
-41	161-48253	•TANK ASSY - REAR SECTION DROP	AB	1
	161-48253-51	•TANK ASSY - REAR SECTION DROP	C	1
-42	161-48278	••FLANGE ASSY - DROP TANK FILLER	ABC	1
-43	161-48281	••GASKET - DROP TANK FILLER FLANGE	ABC	1

A	(TANK SERIAL NO. 1-466)
AB	(TANK SERIAL NO. 1-610) & (611-1235 DELIVERED AS SPARES)
ABC	(TANK SERIAL NO. 1-610) & (611-1235 DELIVERED AS SPARES) & (TANK SERIAL NO. HR1201-HR1696) & (HR1697-HR5557 DELIVERED AS SPARES)
BC	(TANK SERIAL NO. 467-610) & (611-1235 DELIVERED AS SPARES) & (TANK SERIAL NO. HR1201-HR1696) & (HR1697-HR5557 DELIVERED AS SPARES)
C	(TANK SERIAL NO. HR1201-HR1696) & (HR1697-HR5557 DELIVERED AS SPARES)

FIGURE AND INDEX NUMBER	GROUP FUEL SYSTEM		CODE	UNITS PER ASSY
	MAJOR ASSEMBLY	100-GALLON DROP FUEL TANK		
	PART NUMBER	1234567 NOMENCLATURE		
265 -44	161-48279	••ADAPTER ASSY - DROP TANK FILLER	A5	1
-45	9C1-2-7-1/2	•••SAFETY-CHAIN - (NAA)	A5	1
	AN416-2	•••PIN -	A5	2
	20072	••ADAPTER ASSY - (UMP)	C1	1
-46	151-48142-13	••CAP ASSY - FUEL CELL FILLER (CLEAN AS PER EO 05-5E-6A/279)	ABC	1
	190-48274-3	••SPARE PART FOR 151-48142-13 & 20072		
-47	NAS221-10	••SCREW - (ADAPTER ATTACHING)	ABC	16
	AN960D10L	••WASHER -	ABC	16
	205AC-10	••LOCK-O-SEAL - AROMATIC FUEL (WFC)	ABC	16
-48	161-48322	••SCREW - DROP TANK DRAIN	ABC	1
	AN960D416L	••WASHER -	ABC	1
	205AC-1/4	••LOCK-O-SEAL - AROMATIC FUEL (WFC)	ABC	1
-49	AN43-5A	••BOLT -	ABC	2
	AN960D416L	••WASHER -	ABC	1
-50	205AC-1/4	••LOCK-O-SEAL - AROMATIC FUEL (WFC)	ABC	2
	AN960D416	••WASHER -	ABC	2
	AN365-428	••NUT -	ABC	2
-51	AN4-5A	••BOLT -	ABC	1
	205AC-1/4	••LOCK-O-SEAL - AROMATIC FUEL (WFC)	ABC	1
	AN960D416	••WASHER -	ABC	2
	AN365-428	••NUT -	ABC	1
-52	161-48321	••RING - DROP TANK RELIEF-VALVE BOLTING	ABC	1
-53	151-48355-11	•GASKET - DROP TANK RELIEF-VALVE	ABC	1
-54	6-550-76	•RELIEF-VALVE - (PAC) (DROP TANK)	ABC	1
	1111-527826	•SPARE PART FOR 6-550-76 (PAC) OR		
	15-1600	•VALVE ASSY - (SWE)		
-55	161-48337	•VENT - DROP TANK FAIRING TO TANK	ABC	1
	172-48337	•SPARE PART ASSY FOR 161-48337		
-56	AN4H5A	•BOLT - (VENT TO TANK ATTACHING)	ABC	6
	AN960D416L	•WASHER -	ABC	6
-57	205AC-1/4	•LOCK-O-SEAL - AROMATIC FUEL (WFC)	ABC	6
-58	161-48338	•GASKET - DROP TANK FAIRING DIVE VENT	ABC	1
	AN509-416R10	•SCREW - (GASKET TO VENT ATTACHING)	ABC	4
-59	161-48267	•NIPPLE - DROP TANK AIR LINE DISCONNECT	AB	1
	172-48285	•NIPPLE - DROP TANK AIR LINE DISCONNECT	C	1
-60	3H2-8-43	•HOSE - (NAA)	ABC	1
-61	AN737-30	•CLAMP -	ABC	2
-62	3H2-16-41	•HOSE - (NAA)	ABC	1
-63	161-48266	•NIPPLE - DROP TANK FUEL LINE DISCONNECT	AB	1
	172-48284	•NIPPLE - DROP TANK FUEL LINE DISCONNECT	C	1
-64	AN737-46	•CLAMP -	ABC	2
	161-48339	•BLOCK - DROP TANK FAIRING STOP	C	1
	205AC-10	•LOCK-O-SEAL - AROMATIC FUEL (WFC)	C	1
	NAS221-17	•SCREW -	C	1
-65	161-48326	•SEAL ASSY - DROP TANK FORWARD	ABC	1
-66	161-48254	•BAFFLE ASSY - DROP TANK FORWARD	A1	1
	161-48333	•BAFFLE ASSY - DROP TANK FORWARD	A6	1
	AN742D8	••CLAMP -	ABC	1
	AN520-10R6	••SCREW -	ABC	1
	AN365-1032	••NUT -	ABC	1
		AB (TANK SERIAL NO. 1-610) & (611-1235 DELIVERED AS SPARES)		
		ABC (TANK SERIAL NO. 1-610) & (611-1235 DELIVERED AS SPARES) & (TANK SERIAL NO. HR1201-HR1696) & (HR1697-HR5557 DELIVERED AS SPARES)		
		A1 (TANK SERIAL NO. 1-22)		
		A5 (TANK SERIAL NO. 610 & HR1201-HR1498)		
		A6 (TANK SERIAL NO. 23-610 & HR1201-HR1696)		
		C (TANK SERIAL NO. HR1201-HR1696) & (HR1697-HR5557 DELIVERED AS SPARES)		
		C1 (TANK SERIAL NO. HR1499-HR1696)		

FIGURE AND INDEX NUMBER	GROUP	FUEL SYSTEM	CODE	UNITS PER ASSY
	MAJOR ASSEMBLY	100-GALLON DROP FUEL TANK		
	PART NUMBER	1234567 NOMENCLATURE		
265 -67	AN5-12A	•BOLT -	AB	10
	AN5-12A	•BOLT -	C	14
-68	AN5-7A	•BOLT -	ABC	2
	AN960D516	•WASHER -	AB	12
	AN960D516	•WASHER -	C	16
	161-48327	•SEAL ASSY - DROP TANK REAR	ABC	1
	161-48255	•BAFFLE ASSY - DROP TANK REAR	A1	1
	161-48334	•BAFFLE ASSY - DROP TANK REAR	A6	1
	AN5-12A	•BOLT -	ABC	4
	AN960D516	•WASHER -	ABC	4
	AN4-7A	•BOLT -	ABC	2
	AN960D416	•WASHER -	ABC	2
-69	161-48329	•FIN ASSY - 100 IMP. (120 U.S.) GALLON FUEL DROP TANK	ABC	1
-70	AN3-11A	•BOLT -	ABC	2
	AN960D10	•WASHER -	ABC	2
	AN365-1032	•NUT -	ABC	2
-71	AN4-16A	•BOLT -	ABC	2
	AN365-428	•NUT -	ABC	2
	161-48250-906	•DECALCOMANIA - DROP TANK (NO STEP)	AB	2
	172-48250-904	•DECALCOMANIA - DROP TANK (NO STEP)	C	2
-72	172-48214	PLUG - DROP TANK FUEL LINE DISCONNECT (SEE FIG. 258)		REF
-73	172-48215	PLUG - DROP TANK AIR LINE DISCONNECT (SEE FIG. 258)		REF

-000-

AB (TANK SERIAL NO. 1-610) & (611-1235 DELIVERED AS SPARES)

ABC (TANK SERIAL NO. 1-610) & (611-1235 DELIVERED AS SPARES) & (TANK SERIAL NO. HR1201-HR1696) & (HR1697-HR5557 DELIVERED AS SPARES)

A1 (TANK SERIAL NO. 1-22)

A6 (TANK SERIAL NO. 23-610 & HR1201-HR1696)

C (TANK SERIAL NO. HR1201-HR1696) & (HR1697-HR5557 DELIVERED AS SPARES)

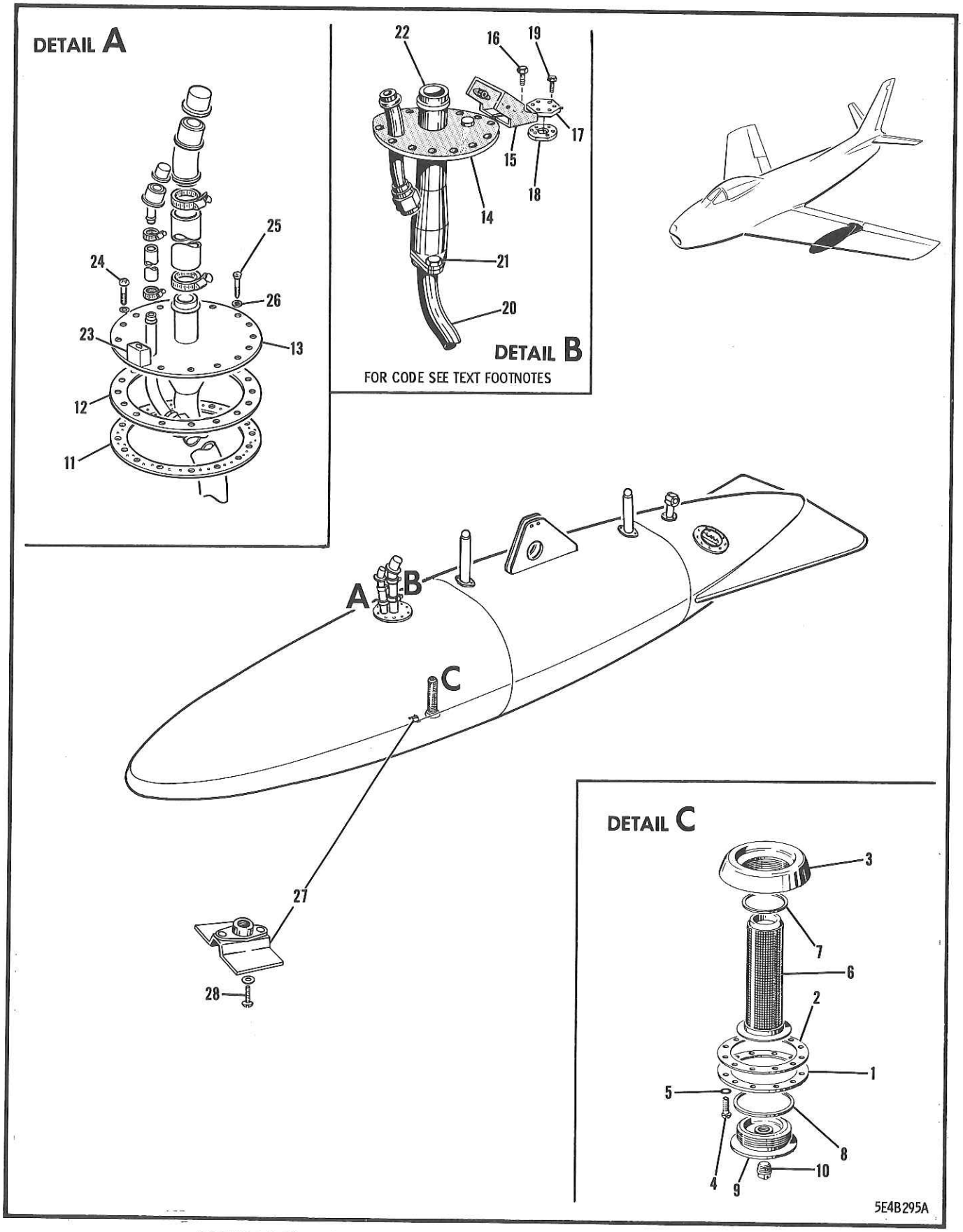

FIGURE 266 FORWARD SECTION 100-GALLON DROP FUEL TANK

FIGURE AND INDEX NUMBER	GROUP FUEL SYSTEM MAJOR ASSEMBLY FORWARD SECTION 100-GALLON DROP FUEL TANK PART NUMBER	1234567 NOMENCLATURE	CODE	UNITS PER ASSY
266 -	161-48251	TANK ASSY - FWD SECT. 100 IMP. (120 U.S.) GALLON FUEL DROP (SEE FIG. 265)	A1	1
	161-48251-51	TANK ASSY - FORWARD SECTION 100 IMPERIAL (120 U.S.) GALLON FUEL DROP	A2	1
	172-48251	COMPARTMENT ASSY - 100 IMP. (120 U.S.) GAL FUEL DROP TANK FORWARD (SEE FIG.265)	C	1
- 1	161-48285	.RETAINER - DROP TANK STRAINER SUP. FLANGE	ABC	1
- 2	161-48284	.GASKET - DROP TANK STRAINER SUPPORT FLANGE	ABC	1
- 3	161-48283	.FLANGE - DROP TANK STRAINER SUPPORT	ABC	1
- 4	NAS221-10	.SCREW -	ABC	12
- 5	AN935-10	.WASHER -	ABC	12
- 6	120-48528	.STRAINER ASSY - DROP TANK	ABC	1
- 7	134-48332	.GASKET - DROP TANK STRAINER	ABC	1
- 8	AN900-34	.GASKET -	ABC	1
- 9	134-48331	.PLUG - DROP TANK STRAINER RETAINER	ABC	1
-10	AN913-1	.PLUG -	ABC	1
-11	161-48277	.FLANGE ASSY - DROP TANK ACCESS HOLE	AB	1
	161-48277-11	.FLANGE ASSY - DROP TANK ACCESS HOLE	C	1
-12	161-48280	.GASKET - DROP TANK ACCESS DOOR FLANGE	ABC	1
-13	161-48282	.COVER ASSY - DROP TANK ACCESS HOLE	AB	1
-14	172-48268	.COVER ASSY - DROP TANK ACCESS HOLE	C	1
-15	172-48254	.BRACKET ASSY - DROP TANK FAIRING ATTACHING	C	1
-16	AN4-5A	.BOLT - (BRACKET TO COVER ATTACHING)	C	2
	205AC-1/4	.LOCK-O-SEAL - AROMATIC FUEL (WFC)	C	2
-17	172-48291	.COVER - DROP TANK PRESSURE RV MOUNTING	C	1
-18	172-48256	.GASKET - DROP TANK PRESSURE RELIEF-VALVE	C	1
-19	AN3H4A	.BOLT - (COVER ATTACHING)	C	6
	205AC-10	.LOCK-O-SEAL - AROMATIC FUEL (WFC)	C	6
-20	172-48292	.LINE ASSY - DROP TANK FUEL FEED		1
-21	AN4-6A	.BOLT - (LINE TO NIPPLE ATTACHING)	C	2
	AN365-428	.NUT -	C	2
-22	172-48298	.NIPPLE - DROP TANK	C	1
-23	161-48339	.BLOCK - DROP TANK FAIRING STOP	ABC	1
-24	NAS221-17	.SCREW - (COVER TO TANK ATTACHING)	AB	1
	NAS221-20	.SCREW - (COVER TO TANK ATTACHING)	C	1
-25	NAS221-9	.SCREW - (COVER TO TANK ATTACHING)	AB	15
	NAS221-13	.SCREW - (COVER TO TANK ATTACHING)	C	15
-26	205AC-10	.LOCK-O-SEAL - AROMATIC FUEL (WFC)	C	16
-27	161-48286	.BRACKET ASSY - DROP TANK PLUG	ABC	1
	AN960D416L	.WASHER -	ABC	1
-28	161-48322	.SCREW - DROP TANK DRAIN	ABC	1
	205AC-1/4	.LOCK-O-SEAL - AROMATIC FUEL (WFC)	ABC	1

-000-

AB (TANK SERIAL NO. 1-610) & (611-1235 DELIVERED AS SPARES)

ABC (TANK SERIAL NO. 1-610) & (611-1235 DELIVERED AS SPARES) & (HR1201-HR1696) & (HR1697-HR5557 DELIVERED AS SPARES)

A1 (TANK SERIAL NO. 1-22)

A2 (TANK SERIAL NO. 23-610)

C (TANK SERIAL NO. HR1201-HR1696) & (HR1697-HR5557 DELIVERED AS SPARES)

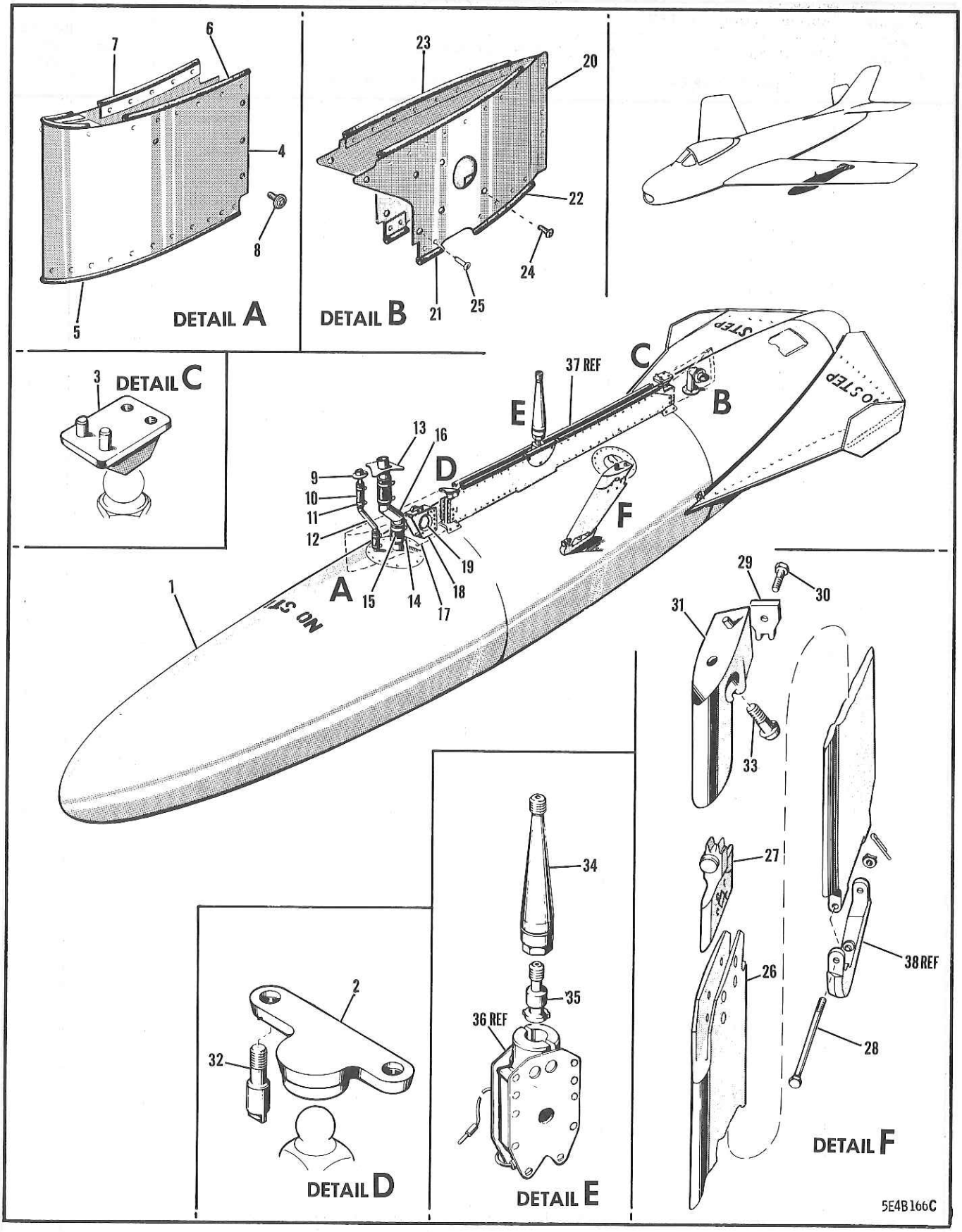

FIGURE 267 167-GALLON DROP FUEL TANK EQUIPMENT

FIGURE AND INDEX NUMBER	GROUP FUEL SYSTEM MAJOR ASSEMBLY 167-GALLON DROP FUEL TANK EQUIPMENT PART NUMBER	1234567 NOMENCLATURE	CODE	UNITS PER ASSY
267 -	176-48302-903	TANK INSTL - 167 IMPERIAL (200 U.S.) GALLON FUEL DROP (PORT WING) (SEE FIG. 1) (AIRCRAFT 23371-23490 INCLUSIVE DELIVERED WITH RCAF SPARE TANKS)		NP
	176-48302-910	SPARE PART INSTL FOR 176-48302-903		
	176-48302-904	TANK INSTL - 167 IMPERIAL (200 U.S.) GALLON FUEL DROP (STBD WING) (SEE FIG. 1) (AIRCRAFT 23371-23490 INCLUSIVE DELIVERED WITH RCAF SPARE TANKS)		NP
	176-48302-911	SPARE PART INSTL FOR 176-48302-904		
- 1	176-48250-51	.TANK ASSY - 167 IMPERIAL (200 U.S.) GALLON FUEL DROP (PORT WING) (SEE FIG. 268)		REF
	176-48250-52	.TANK ASSY - 167 IMPERIAL (200 U.S.) GALLON FUEL DROP (STBD WING) (SEE FIG. 268)		REF
- 2	176-48303-3	.FITTING - DROP TANK FWD POST (PORT WING)		1
	176-48303-4	.FITTING - DROP TANK FWD POST (STBD WING)		1
- 3	161-48341-801	.PAD ASSY - DROP TANK REAR POST BEARING		1
	191-48284-1	.FAIRING ASSY - DROP TANK UNIVERSAL FORWARD (PORT WING)		1
	191-48284-2	.FAIRING ASSY - DROP TANK UNIVERSAL FORWARD (STARBOARD WING)		1
- 4	191-48284-3	..SKIN - DROP TANK FAIRING (PORT WING)		1
	191-48284-4	..SKIN - DROP TANK FAIRING (STBD WING)		1
- 5	5W1-9-29-4	..SEAL - WEATHER (NAA)		1
	191-48284-13	..STRIP - SEAL RETAINING		1
	191-48284-15	..STRIP - SEAL RETAINING		1
- 6	5W1-9-17-14	..SEAL - WEATHER (NAA)		1
- 7	5W1-9-7-10	..SEAL - WEATHER (NAA)		1
	191-48284-9	..STRIP - SEAL RETAINING		1
	191-48284-11	..STRIP - SEAL RETAINING		1
- 8	S.P.1561-10-32-13	.SEMS - FAIRING WASHER (SHI)		6
- 9	13A-64033	.NIPPLE - DROP TANK AIR LINE DISCONNECT		1
-10	3H2-8-13	.HOSE - (NAA)		2
-11	AN737-30	.CLAMP -		4
-12	176-48326	.LINE ASSY - DROP TANK AIR		1
-13	13A-64032	.NIPPLE - DROP TANK FUEL LINE DISCONNECT		1
-14	AN737-46	.CLAMP -		4
-15	3H2-16-14	.HOSE - (NAA)		2
-16	176-48327	.LINE ASSY - DROP TANK FUEL		1
-17	176-48330-1	.CHANNEL - DROP TANK FWD FAIRING SUPPORT (PORT WING)		1
	176-48330-2	.CHANNEL - DROP TANK FWD FAIRING SUPPORT (STARBOARD WING)		1
-18	176-48329-1	.BRACKET ASSY - DROP TANK FORWARD FAIRING ATTACHING (PORT WING)		1
	176-48329-2	.BRACKET ASSY - DROP TANK FORWARD FAIRING ATTACHING (STARBOARD WING)		1
	AN507-832R12	.SCREW -		4
-19	S.P.1561-10-32-8	.SEMS - FAIRING WASHER (SHI)		4
	176-48331-51	.FAIRING ASSY - DROP TANK REAR (PORT WING)		1
	176-48331-52	.FAIRING ASSY - DROP TANK REAR (STBD WING)		1
-20	176-48331-3	..SKIN - DROP TANK FAIRING (PORT WING)		1
	176-48331-4	..SKIN - DROP TANK FAIRING (STARBOARD WING)		1
	176-48331-5	..SKIN - DROP TANK FAIRING (PORT WING)		1
	176-48331-6	..SKIN - DROP TANK FAIRING (STARBOARD WING)		1
-21	5W1-6-1-8	..SEAL - WEATHER (NAA)		2
	176-48331-11	..STRIP - SEAL RETAINING		2
-22	5W1-6-3-8	..SEAL - WEATHER (NAA)		2
	176-48331-9	..STRIP - SEAL RETAINING		2
-23	5W1-6-10-15	..SEAL - WEATHER (NAA)		2

FIGURE AND INDEX NUMBER	GROUP FUEL SYSTEM MAJOR ASSEMBLY 167-GALLON DROP FUEL TANK EQUIPMENT PART NUMBER	1234567 NOMENCLATURE	CODE	UNITS PER ASSY
267 -	176-48331-7	••STRIP - SEAL RETAINING		2
-24	NAS221-39	••SCREW -		1
	AN960D10L	••WASHER -		2
	NAS43DD-3-128	••SPACER -		1
	AN364-1032	••NUT -		1
-25	AN526-1032R16	•SCREW -		6
	176-48306-1	•SWAY-BRACE ASSY - DROP TANK EXT (PORT)		1
	176-48306-2	•SWAY-BRACE ASSY - DROP TANK EXT (STBD)		1
-26	176-48323	••SWAY-BRACE - DROP TANK EXTERNAL		1
-27	170-48314-5	••FITTING - DROP TANK STRUT DISCONNECT MPI		1
	176-48312	••DECALCOMANIA - SGL SWAY-BRACE FUEL TANK		1
	176-48312-801	••SPARE PART FOR 176-48312		
	NAS145DH18	••BOLT -		1
-28	NAS464-6-36	•BOLT - (SWAY-BRACE TO FITTING ATTACHING)		1
	AN320-6	•NUT -		1
	AN380-3-5	•COTTER-PIN -		1
-29	170-48302	•RETAINER - DROP TANK WING ATTACHING STRUT DISCONNECT FITTING MPI		1
	221-48302-950	•SPARE PART FOR 170-48302		
-30	AN4H4A	•BOLT - (SWAY-BRACE TO FITTING ATTACHING)		1
	AN4H6A	•SPARE PART FOR AN4H4A		
	176-48201-101	PACKAGE - 167 IMPERIAL (200 U.S.) GAL FUEL DROP TANK LOOSE EQUIPMENT (PORT) (SEE FIG. 1)		1
	176-48201-102	PACKAGE - 167 IMPERIAL (200 U.S.) GAL FUEL DROP TANK LOOSE EQUIPMENT (STBD) (SEE FIG. 1)		1
-31	170-48313-5	•FITTING ASSY - FUEL DROP TANK WING STRUT ATTACHING DISCONNECT PORT (REAR) MPI		1
	170-48313-6	•FITTING ASSY - FUEL DROP TANK WING STRUT ATTACHING DISCONNECT STBD (REAR) MPI		1
	170-48307	••PIN - FUEL DROP TANK WING STRUT ATT DISC.		1
-32	176-48299-851	•SHEAR-PIN - FUEL DROP TANK FORWARD MPI		2
-33	NAS148DH21	•BOLT - (FITTING TO WING ATTACHING)		1
-34	176-48378	•POST - FUEL DROP TANK SUPPORT		1
-35	176-48379	•STUD - FUEL DROP TANK SUPPORT		1
-36	175-48320	MECHANISM ASSY - DROP TANK RELEASE (SEE FIG. 263)		REF
-37	176-48280-21	BEAM ASSY - 167 IMP. (200 U.S.) GALLON FUEL DROP TANK (SEE FIG. 268)		REF
-38	176-48322-3	FITTING - PORT DROP TANK SWAY-BRACE ATTACHING MPI (SEE FIG. 268)		REF

-000-

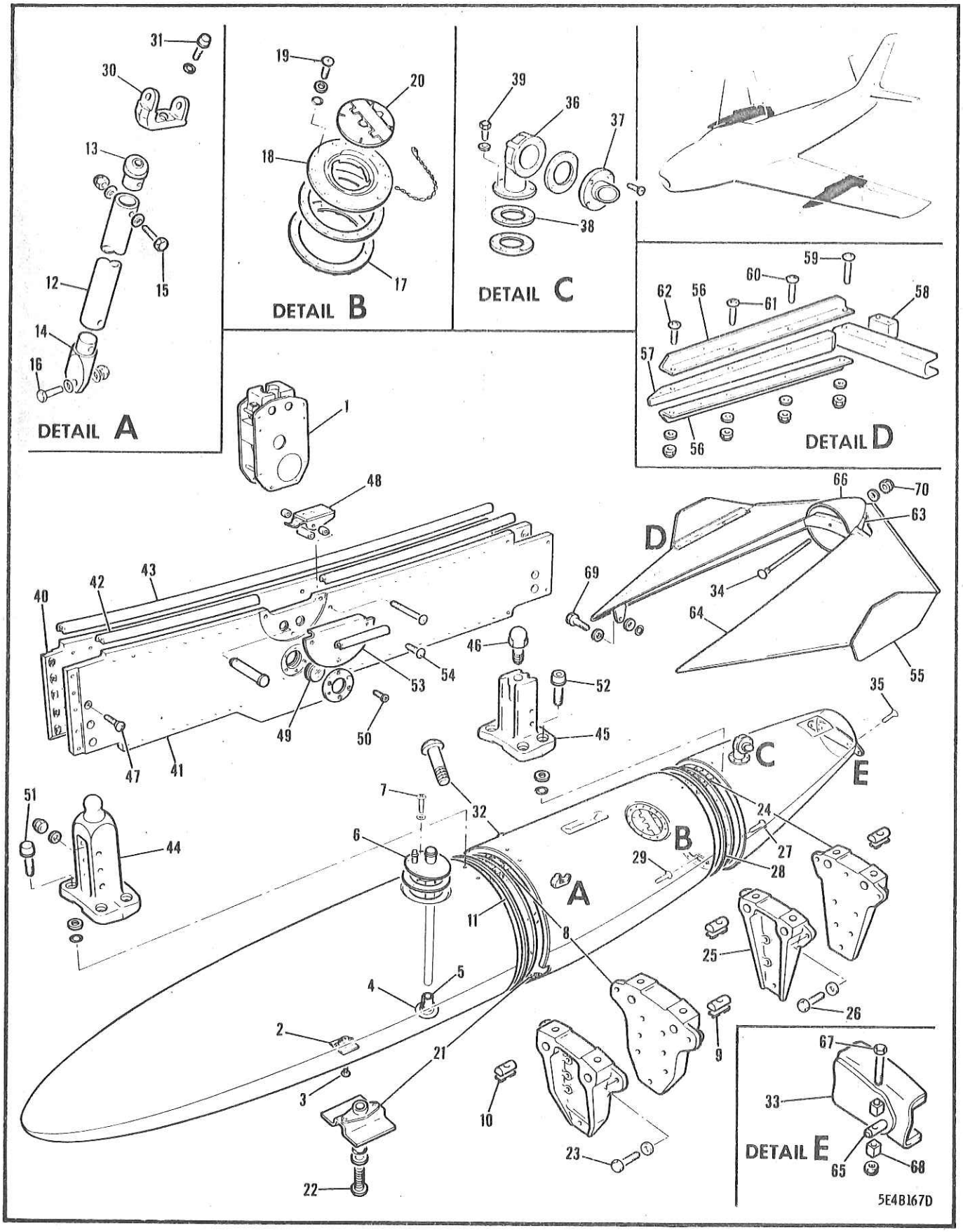

FIGURE 268 (ISSUE 1) 167-GALLON DROP FUEL TANK

FIGURE AND INDEX NUMBER	GROUP FUEL SYSTEM MAJOR ASSEMBLY 167-GALLON DROP FUEL TANK PART NUMBER	1234567 NOMENCLATURE	CODE	UNITS PER ASSY
268 -	176-48250-51	TANK ASSY - 167 IMP. (200 U.S.) GAL FUEL DROP (PORT WING) (SEE FIG. 267) (SERIAL NO. HR181-851 & HR1765-1834)		1
	176-48250-52	TANK ASSY - 167 IMP. (200 U.S.) GAL FUEL DROP (STBD WING) (SEE FIG. 267) (SERIAL NO. HR181-851 & HR1765-1834)		1
- 1	175-48320	.MECHANISM ASSY - DROP TANK RELEASE (SEE FIG. 263)		REF
	AN398-71	.PIN -		2
	176-48251	.TANK ASSY - FORWARD SECTION 167 IMPERIAL (200 U.S.) GAL FUEL DROP		1
- 2	161-48286	..BRACKET - DROP TANK PLUG		1
- 3	161-48322	..SCREW - DROP TANK DRAIN		1
	AN960D416L	..WASHER -		1
	205AC-1/4	..LOCK-O-SEAL - AROMATIC FUEL (WFC)		1
- 4	161-48283	..FLANGE - DROP TANK STRAINER SUPPORT		1
	161-48284	..GASKET - STRAINER SUPPORT FLANGE		1
	161-48285	..RETAINER - STRAINER SUPPORT FLANGE		1
	NAS221-10	..SCREW -		12
	AN935-10	..WASHER -		12
	134-48332	..GASKET - DROP TANK STRAINER		1
- 5	120-48258	..STRAINER ASSY - DROP TANK		1
	AN900-34	..GASKET -		1
	134-48331	..PLUG - DROP TANK STRAINER RETAINER		1
	AN913-1	..PLUG -		1
- 6	176-48273-1	.COVER ASSY - 167 IMPERIAL (200 U.S.) GAL DROP TANK OUTLET (PORT WING TANK)		1
	176-48273-2	.COVER ASSY - 167 IMPERIAL (200 U.S.) GAL DROP TANK OUTLET (STBD WING TANK)		1
	176-48269	.GASKET - DROP TANK OUTLET COVER		1
- 7	NAS221-11	.SCREW - (COVER TO TANK ATTACHING)		16
	AN960D10L	.WASHER -		16
	205AC-10	.LOCK-O-SEAL - AROMATIC FUEL (WFC)		16
	176-48257	.BAFFLE ASSY - 167 IMPERIAL (200 U.S.) GAL DROP TANK FORWARD		1
- 8	176-48259-5	..FITTING ASSY - DROP TANK FWD ATTACHING		1
	S-1452-070	...BARREL-NUT - HIGH TENSILE (ESN)		2
- 9	98480	...RETAINER - (MKM)		2
	176-48259-3	.FITTING ASSY - DROP TANK FWD ATTACHING		1
	S-1452-070	..BARREL-NUT - HIGH TENSILE (ESN)		2
-10	98480	..RETAINER - (MKM)		2
	AN5-10A	.BOLT -		2
	AN960D516L	.WASHER -		2
-11	176-48266	.GASKET - DROP TANK FORWARD SPLIT		1
	176-48293-1	.SWAY-BRACE ASSY - DROP TANK INTERNAL LH		1
	176-48293-2	.SWAY-BRACE ASSY - DROP TANK INTERNAL RH		1
-12	176-48294	..SWAY-BRACE - DROP TANK INTERNAL		1
-13	176-48295-1	..FITTING ASSY - INTERNAL SWAY-BRACE UP. LH		1
	176-48295-2	..FITTING ASSY - INTERNAL SWAY-BRACE UP. RH		1
	RL38SB-9	...LOCK-RING - STANDARD (ROS)		1
	RD208SH-9L	...INSERT - LOCKED-IN (ROS)		1
-14	176-48296-1	..FITTING ASSY - INTERNAL SWAY-BRACE LWR LH		1
	176-48296-2	..FITTING ASSY - INTERNAL SWAY-BRACE LWR RH		1
-15	AN5-20A	..BOLT - (FITTING TO SWAY-BRACE ATTACHING)		2
	AN960D516	..WASHER -		4
	AN365-524	..NUT -		2
-16	AN9-15A	.BOLT -		2
	AN960D916	.WASHER -		2
	AN365-918	.NUT -		2
	176-48252	.TANK ASSY - CENTRE SECTION 167 IMPERIAL (200 U.S.) GAL FUEL DROP		1

FIGURE AND INDEX NUMBER	GROUP	FUEL SYSTEM	CODE	UNITS PER ASSY
	MAJOR ASSEMBLY	167-GALLON DROP FUEL TANK		
	PART NUMBER	1234567 NOMENCLATURE		
268 -17	176-48271	••RING ASSY - DROP TANK OUTLET		1
	176-48269	••GASKET - DROP TANK FILLER CAP ADAPTER		1
-18	176-48262	••ADAPTER ASSY - DROP TANK FILLER CAP		1
-19	NAS221-11	••SCREW - (ADAPTER TO TANK ATTACHING)		16
	AN960D10L	••WASHER -		16
	205AC-10	••LOCK-O-SEAL - AROMATIC FUEL (WFC)		16
-20	176-48274-3	••CAP ASSY - DROP TANK FILLER (CLEAN AS PER EO 05-5E-6A/279)		1
		OR		
	191-48274-3	••CAP ASSY - DROP TANK FILLER		
	AN416-1	••HOOK -		1
-21	161-48286	••BRACKET ASSY - DROP TANK DRAIN		1
-22	161-48322	••SCREW - DROP TANK DRAIN		1
	AN960D416L	••WASHER -		1
	205AC-1/4	••LOCK-O-SEAL - AROMATIC FUEL (WFC)		1
-23	AN5-12A	•BOLT - (TANK FWD TO CENTRE SECTION ATT)		14
	AN960D516L	•WASHER -		14
	176-48261	•BAFFLE ASSY - 167 IMPERIAL (200 U.S.) GAL DROP TANK REAR		1
-24	176-48263-5	••FITTING ASSY - DROP TANK REAR ATTACHING		1
	S-1452-064	•••BARREL-NUT - HIGH TENSILE (ESN)		2
	98479	•••RETAINER - (MKM)		2
-25	176-48263-3	•FITTING ASSY - DROP TANK REAR ATTACHING		1
	S-1452-9	••BARREL-NUT - HIGH TENSILE (ESN)		2
	98479	••RETAINER - (MKM)		2
-26	AN4-12A	•BOLT - (TANK CENTRE TO REAR SECTION ATT)		2
	AN960D416	•WASHER -		2
-27	AN4-7A	•BOLT -		2
	AN960D416	•WASHER -		2
-28	176-48267	•GASKET - DROP TANK REAR SPLIT		1
-29	AN4-12A	•BOLT -		6
	AN960D416	•WASHER -		12
-30	176-48322-3	•FITTING - SWAY-BRACE TO TANK ATT LH MPI		1
		OR		
	176-48322-953	•FITTING - SWAY-BRACE TO TANK ATT LH MPI		
	176-48322-4	•FITTING - SWAY-BRACE TO TANK ATT RH MPI		1
		OR		
	176-48322-954	•FITTING - SWAY-BRACE TO TANK ATT RH MPI		
-31	NAS146DH20	•BOLT -		1
	MS29513-12	•SEAL - O-RING HYDROCARBON FUEL RESISTANT		1
-32	NAS224-10	•SCREW -		1
	205AC-3/8	•LOCK-O-SEAL - AROMATIC FUEL (WFC)		1
	176-48253-31	•TANK ASSY - REAR SECTION 167 IMPERIAL (200 U.S.) GAL FUEL DROP		1
-33	176-48256	••BRACKET ASSY - DROP TANK REAR FIN		1
-34	176-48272	••BOLT - DROP TANK CONE ATTACHING		1
-35	AN509-416R13	••SCREW -		6
	MS29513-10	••SEAL - O-RING HYDROCARBON FUEL RESISTANT		6
	176-48278-31	•VALVE ASSY - DROP TANK DIVE VENT (PORT)		1
	176-48278-32	•VALVE ASSY - DROP TANK DIVE VENT (STBD)		1
-36	176-48277-31	••HOUSING - DIVE VENT FLAPPER		1
	176-48276	••GASKET - DIVE VENT FLAPPER HOUSING		1
-37	1111-526657	••VALVE ASSY - (PAC)		1
		OR		
	5-2200	••VALVE ASSY - (SWE)		
	176-48275	••RING - DIVE VENT VALVE		1
	AN509-416R13	••SCREW - (VALVE TO HOUSING ATTACHING)		4
-38	176-48283	•GASKET - DIVE VENT VALVE		1
-39	AN4H5A	•BOLT - (VALVE TO TANK ATTACHING)		6
	AN960D416L	•WASHER -		6
	13-62046-3	•NAME-PLATE - FUEL DROP TANK (PORT TANK)		1

FIGURE AND INDEX NUMBER	GROUP FUEL SYSTEM MAJOR ASSEMBLY 167-GALLON DROP FUEL TANK PART NUMBER	1234567 NOMENCLATURE	CODE	UNITS PER ASSY
268 -	13-62046-5	•NAME-PLATE - FUEL DROP TANK (STBD TANK)		1
	176-48280-21	•BEAM ASSY - 167 IMPERIAL (200 U.S.) GALLON FUEL DROP TANK (PORT WING)		1
	176-48280-22	•BEAM ASSY - 167 IMPERIAL (200 U.S.) GALLON FUEL DROP TANK (STARBOARD WING)		1
-40	176-48281-1	••PLATE - DROP TANK BEAM INBOARD (PORT)		1
	176-48281-2	••PLATE - DROP TANK BEAM INBOARD (STBD)		1
-41	176-48282-1	••PLATE - DROP TANK BEAM OUTBOARD (PORT)		1
	176-48282-2	••PLATE - DROP TANK BEAM OUTBOARD (STBD)		1
-42	176-48290-7	••SEAL - DROP TANK BEAM UPPER		1
	176-48290-5	••SEAL - DROP TANK BEAM UPPER		1
-43	176-48290-3	••SEAL - DROP TANK BEAM UPPER		1
-44	176-48284-3	••POST - DROP TANK BEAM FORWARD		1
-45	176-48307-801	••POST - DROP TANK BEAM REAR (AS PER EO 15-20HB-6A/1)		1
-46	191-48279	••BALL - DROP TANK BEAM REAR POST (AS PER EO 15-20HB-6A/1)		1
-47	NAS335A7-5	••BOLT - (PLATE TO POST ATTACHING)		10
	AN960D516	••WASHER -		10
	AN365-524	••NUT -		10
-48	170-48308-10	••LEVER ASSY - MANUAL DROP TANK JETTISON		1
	NAS221-45	••SCREW -		1
	AN960D10L	••WASHER -		1
	NAS43DD-5-11	••SPACER -		2
	NAS43DD-3-86	••SPACER -		1
	AN365-1032	••NUT -		1
-49	176-48280-953	••WINDOW - DROP TANK BEAM		1
	176-48280-951	••RETAINER - DROP TANK BEAM WINDOW		1
	161-48261-954	••DECALCOMANIA - DROP TANK BEAM WINDOW		1
	161-48261-956	••DECALCOMANIA - DROP TANK BEAM WINDOW		1
-50	AN507-632R6	••SCREW -		6
	2W1SR72-44-40	••WASHER - PLAIN (NAA)		1
	176-48280-11	••STRIP - DROP TANK BEAM LOWER RUBBER		1
	176-48280-13	••STRIP - DROP TANK BEAM LOWER RUBBER		1
-51	NAS147-29	•BOLT - (POST TO TANK ATTACHING)		4
	176-48288-3	•WASHER - DROP TANK POST ATTACHING SEAL		4
	MS29513-13	•SEAL - O-RING HYDROCARBON FUEL RESISTANT		4
-52	NAS146-22	•BOLT -		4
	176-48288-5	•WASHER - DROP TANK POST ATTACHING SEAL		4
	MS29513-12	•SEAL - O-RING HYDROCARBON FUEL RESISTANT		4
	176-48287	•COVER ASSY - DROP TANK BEAM		1
-53	176-48287-3	••COVER - DROP TANK BEAM		1
	176-48290-9	••SEAL - DROP TANK BEAM COVER		1
-54	AN500A8-8	•SCREW -		3
	191-48255	•FIN ASSY - 167 IMPERIAL (200 U.S.) GALLON FUEL DROP TANK		1
	191-48255-29	••FIN ASSY - DROP TANK LH		1
	191-48255-30	••FIN ASSY - DROP TANK RH		1
-55	191-48255-5	•••PLATE - DROP TANK FIN		2
-56	191-48255-11	•••ANGLE - DROP TANK FIN LH		2
	191-48255-12	•••ANGLE - DROP TANK FIN RH		2
-57	191-48255-13	•••FILLER - DROP TANK FIN		2
-58	191-48255-15	•••FILLER - DROP TANK FIN		2
-59	NAS221-15	••SCREW -		2
-60	NAS221-23	••SCREW -		2
-61	NAS221-20	••SCREW -		2
-62	NAS221-18	••SCREW -		2
	AN960D10L	••WASHER -		8
	AN365-1032	••NUT -		8
-63	191-48270-1	••SEAL - DROP TANK FIN REAR LH		1

FIGURE AND INDEX NUMBER	GROUP FUEL SYSTEM MAJOR ASSEMBLY 167-GALLON DROP FUEL TANK PART NUMBER	1234567 NOMENCLATURE	CODE	UNITS PER ASSY
268 -	191-48270-2	••SEAL - DROP TANK FIN REAR RH		1
-64	191-48318-1	••SEAL - DROP TANK FIN LH		1
	191-48318-2	••SEAL - DROP TANK FIN RH		1
-65	176-48254	••PIN - DROP TANK FIN ATTACHING		2
-66	191-48255-9	••CONE - DROP TANK FIN		1
-67	AN4-20A	•BOLT -		2
-68	176-48260	•BUSHING - DROP TANK FIN ATTACHING		4
	AN364-428	•NUT -		2
-69	AN4-7A	•BOLT - (FIN TO TANK ATTACHING)		2
	AN960D416	•WASHER -		4
	205AC-1/4	•LOCK-O-SEAL - AROMATIC FUEL (WFC)		2
	AN960D416	•WASHER -		1
-70	AN365-428	•NUT -		1
		-000-		

SECTION 13
OIL SYSTEM

TABLE OF CONTENTS

FIGURE	TITLE	PAGE
269	ENGINE OIL SYSTEM	1118
270	OIL TANK	1122

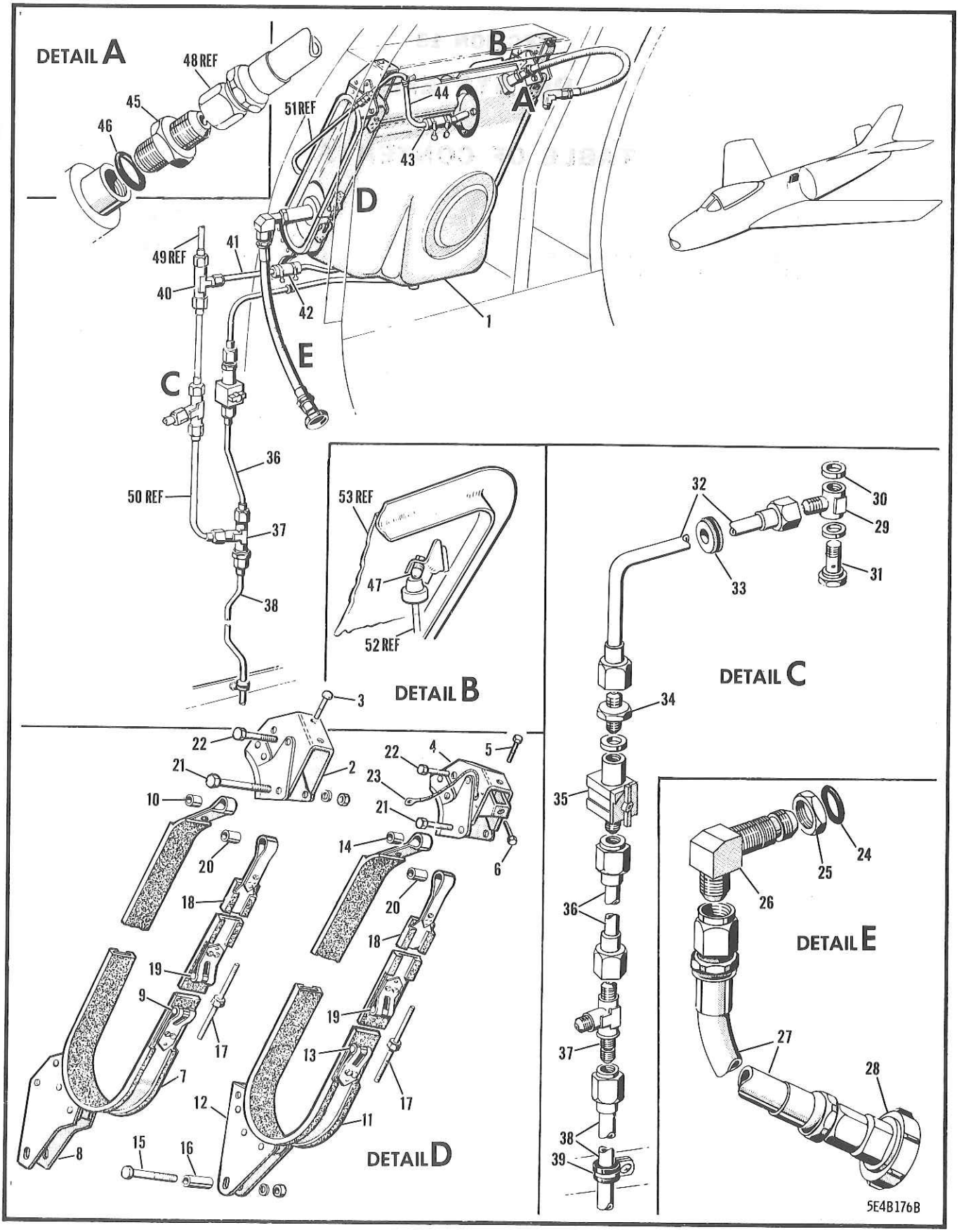

FIGURE 269 ENGINE OIL SYSTEM

FIGURE AND INDEX NUMBER	GROUP OIL SYSTEM MAJOR ASSEMBLY ENGINE OIL SYSTEM PART NUMBER	1234567 NOMENCLATURE	CODE	UNITS PER ASSY
269 -	13A-65001	OIL SYSTEM EQUIP. INSTL - COMPLETE (SEE SECTION 5)	001-370	NP
	13A-65001-900	OIL SYSTEM EQUIP. INSTL - COMPLETE (ALSO USED ON 23001 & 23021 & 23041) (SEE SECTION 5)	371-	NP
- 1	176-47002	.TANK ASSY - OIL (SEE FIG. 270)		REF
	172-47064	.SUPPORT INSTL - OIL TANK UPPER		NP
- 2	176-47005	..SUPPORT ASSY - OIL TANK FUSELAGE STA 205		1
	AN394-47	...PIN -		1
	AN960D416	...WASHER -		1
	AN380-2-2	...PIN -		1
- 3	AN4-5A	..BOLT - (SUPPORT TO LONGERON ATTACHING AT FUSELAGE STA 205)		2
	AN960D416	..WASHER -		2
	AN365-428	..NUT -		2
- 4	176-47006	..SUPPORT ASSY - OIL TANK FUSELAGE STA 226		1
	AN394-47	...PIN -		1
	AN380-2-2	...PIN -		1
	AN960D416	...WASHER -		1
- 5	AN4-5A	..BOLT - (SUPPORT TO LONGERON ATTACHING AT FUSELAGE STA 224)	001-370	1
	AN4-6A	..BOLT - (SUPPORT TO LONGERON ATTACHING AT FUSELAGE STA 224)	371-	1
	AN960D416	..WASHER -		1
	AN365-428	..NUT -		1
- 6	AN3-4A	..BOLT - (SUPPORT TO LONGERON ATTACHING AT FUSELAGE STA 224)		1
	AN365-1032	..NUT -		1
	172-47066	.STRAP ASSY - OIL TANK FUS STA 205 OUTBOARD		1
- 7	172-47066-3	..STRAP - OIL TANK FUSELAGE STA 205 OUTBD		1
	172-47066-5	..PAD - OIL TANK FUS STA 205 OUTBOARD STRAP (MAKE FROM 2600-3 X 18-1/8 (ADE))		1
- 8	172-47069	..BRACKET ASSY - OIL TANK SUP. FUS STA 207		1
- 9	NAS25-3R	..TRUNNION -		1
-10	NAS42C8-64	..SPACER -		1
	AN520-10-8	..SCREW -		3
	AN960D10	..WASHER -		3
	AN365-1032	..NUT -		3
	172-47070	.STRAP ASSY - OIL TANK FUS STA 226 OUTBOARD		1
-11	172-47070-3	..STRAP - OIL TANK FUSELAGE STA 226 OUTBD		1
	172-47070-5	..PAD - OIL TANK FUS STA 226 OUTBOARD STRAP (MAKE FROM 2600-3 X 25-1/16 (ADE))		1
-12	172-47071	..BRACKET ASSY - OIL TANK SUP. FUS STA 223		1
-13	NAS25-3R	..TRUNNION -		1
-14	NAS42C8-64	..SPACER -		1
	AN520-10R8	..SCREW -		3
	AN960D10	..WASHER -		3
	AN365-1032	..NUT -		3
-15	AN3-22A	.BOLT - (LOWER BRACKET TO CHANNEL ATT)		4
-16	NAS43C-3-96	.SPACER -		4
	AN960D10	.WASHER -		4
	AN365-1032	.NUT -		4
-17	NAS27-3-20	.TURNBUCKLE - (INBOARD TO OUTBD STRAP ATT)		2
	172-47068-13	.STRAP ASSY - OIL TANK FUSELAGE STA 205 & 226 INBOARD		2
-18	172-47068-7	..STRAP - OIL TANK FUS STA 205 & 226 INBD		1
	172-47068-5	..PAD - OIL TANK FUSELAGE STA 205 & 226 INBOARD STRAP (MAKE FROM 2600-3 X 10-3/8 (ADE))		1
-19	NAS25-3L	..TRUNNION -		1
-20	NAS42C8-64	..SPACER -		1

FIGURE AND INDEX NUMBER	GROUP OIL SYSTEM MAJOR ASSEMBLY ENGINE OIL SYSTEM PART NUMBER	1234567 NOMENCLATURE	CODE	UNITS PER ASSY
269 -	AN520-10-8	••SCREW -		3
	AN960D10	••WASHER -		3
	AN365-1032	••NUT -		3
-21	AN4-15	•BOLT - (INBOARD & OUTBOARD STRAP TO UPPER BRACKET ATTACHING)		2
-22	AN4-17	•BOLT - (INBOARD & OUTBOARD STRAP TO UPPER BRACKET ATTACHING)		2
	AN960D416	•WASHER -		4
	AN310-4	•NUT -		4
	AN380-2-2	•PIN -		4
-23	AN749-3-3	•JUMPER -		1
	NAS220-8	•SCREW -		2
	AN960D8	•WASHER -		2
	AN365-832	•NUT -		2
-24	AN6227B22	•PACKING -		1
-25	AN924-16D	•NUT -		1
-26	13A-65015	•ELBOW - FLARED TUBE 90-DEG		1
-27	MS28741-16D-0160	•HOSE ASSY - DETACHABLE END FITTING M/P (OIL INLET)	001-370	1
	MS28741-16D-0140	•HOSE ASSY - DETACHABLE END FITTING M/P (OIL INLET) (ALSO USED ON 23001 & 23021 & 23041)	371-	1
	145-25-16	•NUT - COUPLING UNION (AQC)		1
-28	140-S1-16D	•COUPLING-HALF - HOSE SELF-SEALING (AQC)		1
-29	AN776-6	•ELBOW -		1
-30	AN901-6C	•GASKET -		2
-31	AN775-6	•BOLT -		1
-32	13A-65011-8	•LINE ASSY - OIL TANK SUMP DRAIN (TANK FITTING TO UNION)		1
-33	AN931-6-16	•GROMMET -		1
-34	AN815-6D	•UNION -		1
	AN6290-6	•GASKET -		1
-35	7101-2	•VALVE - BALL DRAIN (KAP)		1
-36	13A-65011-4	•LINE ASSY - OIL TANK SUMP (DRAIN-COCK TO TEE)		1
-37	AN804D6	•TEE -		1
	AN960D916	•WASHER -		1
	AN924-6D	•NUT -		1
-38	172-47802-19	•LINE ASSY - OIL HYD DRAIN (TEE TO ATM)		1
-39	AN742D8C	•CLAMP -		1
	NAS221-9	•SCREW -		1
	AN960D10L	•WASHER -		1
	AN365-1032	•NUT -		1
-40	AN824-6D	•TEE -		1
-41	13A-65011-6	•LINE ASSY - OIL TANK SCUP (DRAIN TO TEE)		1
-42	3H2-6-15	•HOSE - (NAA)		1
	AN737RH26	•CLAMP -		2
-43	3H2-10-10	•HOSE - (NAA)		1
	AN737RM34	•CLAMP -		2
-44	172-47802-950	•LINE ASSY - ENGINE OIL VENT		1
-45	AN815-12D	•UNION - (OIL RETURN HOSE TO TANK ATT)		1
-46	AN6227B18	•PACKING -		1
-47	2W1AL12-20-32	•WASHER - PLAIN (NAA) (OIL DIP-STICK ADJ)		AR
-48	MS28741-12-0300	HOSE ASSY - (ENGINE OIL RETURN) (SEE SECTION 5)		REF
-49	13A-71820-25	LINE ASSY - (AIR DRAIN) (SEE SECTION 11)		REF
-50	13A-71820-19	LINE ASSY - DRAIN (SEE SECTION 11)		REF
-51	13A-65013	TUBE ASSY - OIL VENT (SEE SECTION 3)		REF
-52	176-947005	ROD ASSY - OIL TANK DIP-STICK (SEE FIG•270)		REF
-53	13A-65002	DOOR ASSY - OIL TANK (SEE SECTION 3)		REF

-000-



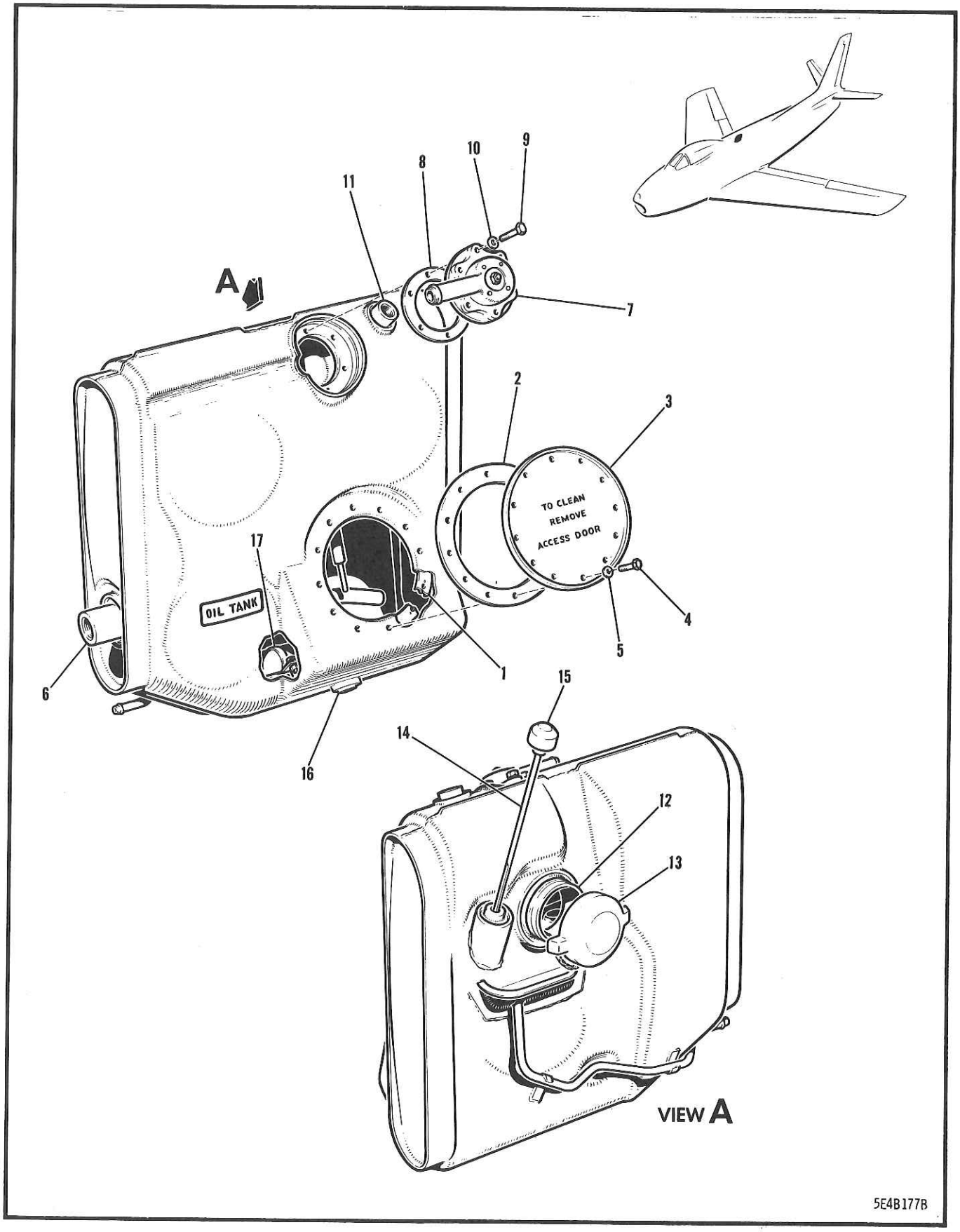

FIGURE 270 OIL TANK

FIGURE AND INDEX NUMBER	GROUP	OIL SYSTEM	CODE	UNITS PER ASSY
	MAJOR ASSEMBLY	OIL TANK		
	PART NUMBER	1234567 NOMENCLATURE		
270 -	176-47002	TANK ASSY - OIL (SEE FIG. 269)		1
- 1	172-47012	•RING ASSY - OIL TANK ACCESS		1
- 2	140-47020	•GASKET - OIL TANK HAND ACCESS COVER		1
- 3	151-47073	•COVER - OIL TANK SIDE		1
- 4	AN3-4A	•BOLT - (COVER TO TANK ATTACHING)		12
- 5	205AC-10	•LOCK-O-SEAL - AROMATIC FUEL (WFC)		12
- 6	172-47076	•FITTING - OIL TANK OUTLET		1
- 7	SA8256C	•VALVE - OIL TANK VENT (STT)		1
- 8	165-47041	•GASKET - OIL TANK VENT VALVE		1
- 9	AN3-7A	•BOLT - (VALVE TO TANK ATTACHING)		6
-10	205AC-10	•LOCK-O-SEAL - AROMATIC FUEL (WFC)		6
-11	172-47075	•FLANGE - OIL TANK RETURN		1
-12	151-47070	•FLANGE - OIL TANK FILLER CAP		1
-13	172-47007	•CAP ASSY - OIL TANK FILLER		1
	13B-61002	•CAP ASSY - OIL TANK FILLER (SERVICE EFFECTIVITY 001-760)		1
	176-947005	•ROD ASSY - OIL TANK DIP-STICK		1
-14	6231	••CAP DIP-STICK ASSY - .25 SIZE (ROY) (OIL TANK)		1
-15	6097	••CAP DIP-STICK & NIPPLE ASSY - (ROY)		1
-16	172-47015	•FITTING - OIL TANK SUMP DRAIN		1
-17	2C17-16H	•CLIP - LOOP TYPE TUBE (NAA)		1
	5B17C4A	•BOLT - CORROSION-RESISTANT (10-32) (NAA) OR		1
	7S14-10-32-9A	•SCREW - ROUNDHEAD CORROSION-RESISTANT(NAA)		
	AN363C1032	•NUT -		1
	176-47002-902	•DECALCOMANIA - OIL TANK		1

-000-

SECTION 14

HEAT & VENT & PRESSURIZATION SYSTEM

TABLE OF CONTENTS

FIGURE	TITLE	PAGE
271	COCKPIT PRIMARY HEAT & VENT SYSTEM	1126
272	COCKPIT SECONDARY HEAT & VENT SYSTEM	1130
273	COCKPIT HEAT & VENT CONTROLS	1134
274	COCKPIT HEAT & VENT AIR REGULATOR SYSTEM	1138
275	COCKPIT VENT SYSTEM	1140
276	COCKPIT PRESSURE SWITCH (EFFECTIVE AIRCRAFT 23001 TO 23210 INCL)	1142
277	CANOPY SEAL INFLATING SYSTEM	1144
278	AMMUNITION HEAT & VENT SYSTEM (EFFECTIVE AIRCRAFT 23001 TO 23210 INCL)	1146

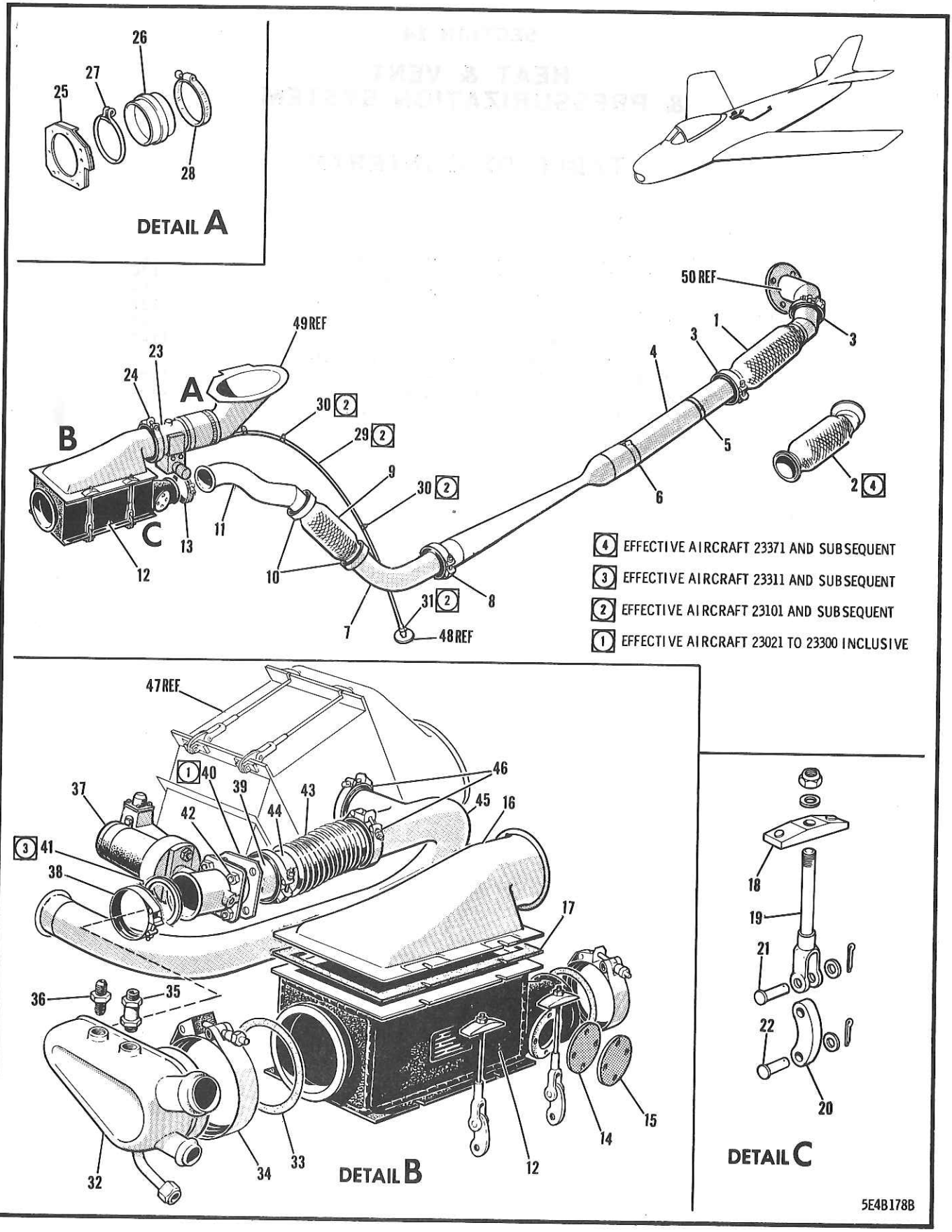

FIGURE 271 COCKPIT PRIMARY HEAT & VENT SYSTEM

FIGURE AND INDEX NUMBER	GROUP: HEAT & VENT & PRESSURIZATION SYSTEM MAJOR ASSEMBLY: COCKPIT PRIMARY HEAT & VENT SYSTEM PART NUMBER	1234567 NOMENCLATURE	CODE	UNITS PER ASSY
271 -	13A-74001	HEAT & VENT SYS EQUIP. INSTL - COMPLETE (SEE SECTION 3)	001-210	NP
	13A-74001-10	HEAT & VENT SYS EQUIP. INSTL - COMPLETE	211-	NP
- 1	CM100009	•CONNECTOR - (FLO)	001-370	1
		OR		
	2064B	•CONNECTOR - (UNX)	001-370	
- 2	13B-74015	•CONNECTOR ASSY - H/VENT SYS MISALIGNING	371-	1
	165-53532-5	•O-RING - HEAT & VENT SYS AIR DUCT SEALING		2
- 3	43688-200	•CLAMP - (MPC)		2
- 4	13A-74038	•DUCT ASSY - H/VENT SYS FUSELAGE STA 193 TO FLEXIBLE CONNECTOR	001-370	1
	13B-74016	•DUCT ASSY - H/VENT SYS FUSELAGE STA 190 TO FLEXIBLE CONNECTOR	371-	1
- 5	AN737TW74	•CLAMP -	001-370	1
	AN735-36	•CLAMP -	371-	1
- 6	172-53321	•CLAMP ASSY - HEAT & VENT SYSTEM CABIN AIR LINE SUPPORT		1
	AN3-5A	•BOLT -		1
	AN960D10L	•WASHER -		1
	AN365-1032	•NUT -		1
- 7	172-53320	•ELBOW ASSY - H/VENT SYS CABIN AIR FUSELAGE STA 193 TO 186		1
	165-53532-5	•O-RING - HEAT & VENT SYS AIR DUCT SEALING		1
- 8	43688-200	•CLAMP - (MPC)		1
	172-53318	•CLAMP ASSY - H/VENT SYS FUS STA 190 CABIN AIR LINE SUPPORT		2
	AN3-5A	•BOLT -		2
	AN960D10L	•WASHER -		2
	AN365-1032	•NUT -		2
- 9	CM100009	•CONNECTOR - (FLO)		1
		OR		
	2064B	•CONNECTOR - (UNX)	001-370	
	165-53532-5	•O-RING - HEAT & VENT SYS AIR DUCT SEALING		2
-10	43688-200	•CLAMP - (MPC)		2
-11	172-53319	•DUCT ASSY - H/VENT SYSTEM PRIMARY HEAT EXCHANGER CABIN AIR INLET		1
	172-53382	•SEAL - H/VENT SYSTEM CABIN AIR SUPPLY DUCT FUSELAGE STA 178 UPPER		1
	172-53383	•SEAL - H/VENT SYSTEM CABIN AIR SUPPLY DUCT FUSELAGE STA 178 LOWER		1
	172-53384	•RETAINER - H/VENT SYSTEM CABIN AIR SUPPLY DUCT FUSELAGE STA 178 UPPER		1
	172-53385	•RETAINER - H/VENT SYSTEM CABIN AIR SUPPLY DUCT FUSELAGE STA 178 LOWER		1
	AN515-8R7	•SCREW -		6
	AN960D8L	•WASHER -		6
-12	80151	•EXCHANGER OUTLINE - HEAT (ARM)		1
	165-53532-5	•O-RING - H/VENT SYSTEM AIR DUCT SEALING		1
-13	43688-200	•CLAMP - (MPC)		1
-14	172-53397	•GASKET - H/VENT SYSTEM PRIMARY HEAT EXCH SIDE BLEED OUTLET CAP		1
-15	172-53396	•CAP - H/VENT SYSTEM PRIMARY HEAT EXCHANGER SIDE BLEED OUTLET	001-100	1
	172-53464	•CAP - H/VENT SYSTEM PRIMARY HEAT EXCHANGER SIDE BLEED OUTLET	101-	1
	AN501A10-8	•SCREW - (CAP ATTACHING)		4
	2W1C14-12-32	•WASHER - PLAIN (NAA)		4
-16	172-53361	•OUTLET - H/VENT SYS PRIMARY HEAT EXCHANGER COOLING AIR		1
		OR		
	172-53361-950	•OUTLET - H/VENT SYS PRIMARY HEAT EXCHANGER COOLING AIR		
-17	172-53374-5	•SEAL - H/VENT SYS HEAT EXCHANGER DUCT ATT		2
	172-53379	•CLAMP ASSY - H/VENT SYSTEM HEAT EXCHANGER DUCT ATTACHING		4

FIGURE AND INDEX NUMBER	GROUP	HEAT & VENT & PRESSURIZATION SYSTEM	CODE	UNITS PER ASSY
	MAJOR ASSEMBLY	COCKPIT PRIMARY HEAT & VENT SYSTEM		
	PART NUMBER	1234567 NOMENCLATURE		
271 -18	172-53375	••RETAINER ASSY - H/VENT SYS HEAT EXCHANGER DUCT ATTACHING		1
-19	172-53378	••ROD ASSY - H/VENT SYS HEAT EXCH DUCT ATT		1
	AN960D416	••WASHER -		1
	AN365-428	••NUT -		1
-20	172-53376	••LINK - H/VENT SYS HEAT EXCHANGER DUCT ATT		1
-21	AN393-17	••PIN -		1
	AN960D10L	••WASHER -		1
	AN380-2-1	••COTTER-PIN -		1
-22	AN393-23	•PIN -		4
	AN960D10L	•WASHER -		4
	AN380-2-1	•COTTER-PIN -		4
-23	94510-2	•VALVE - MODULATING SHUT-OFF AIR (ARM)	001-100	1
	104226	•VALVE - (ARM)	101-	1
	165-53532-9	•O-RING - HEAT & VENT SYS AIR DUCT SEALING		1
-24	43688-300	•CLAMP - (MPC)		1
-25	172-53400-800	•SEAL ASSY - H/VENT SYSTEM HEAT EXCHANGER OVBD DUMP (AS PER EO 05-5E-6A/86)		1
	172-53388	••SEAL - H/VENT SYSTEM HEAT EXCHANGER OVERBOARD DUCT INBOARD		1
	172-53389-950	••SEAL - H/VENT SYSTEM HEAT EXCH OVBD DUCT OUTBOARD (AS PER EO 05-5E-6A/86)		1
	172-53387-950	••RETAINER - H/VENT SYSTEM HEAT EXCHANGER OVERBOARD DUCT OUTBOARD SEAL (AS PER EO 05-5E-6A/86)		1
	172-53386	••RETAINER - H/VENT SYS HEAT EXCH OVBD DUCT INBOARD SEAL (AS PER EO 05-5E-6A/86)		1
	AN515-8R7	•SCREW - (SEAL ATTACHING)		5
	AN960D8L	•WASHER -		5
-26	165-53409-7	•HOSE - H/VENT SYSTEM SILICONE CONNECTING		1
-27	120-53344-12	•CLAMP ASSY - ANTI-ICING SYS EMP CONNECTOR		1
	AN520-10R16	•SCREW -		1
	AN960D10L	•WASHER -		1
	AN365-1032	•NUT -		1
-28	AN737TW107	•CLAMP -		1
-29	176-53320-805	•HOSE - H/VENT SYS LOW PRESSURE FLEX. DRAIN	101-	1
-30	AN742D10C	•CLAMP -	101-	2
-31	AN737TW22	•CLAMP -	101-	2
-32	172-53363-10	•OUTLET ASSY - H/VENT SYSTEM PRIMARY HEAT EXCHANGER HIGH PRESSURE	001-210	1
	172-53363-25	•OUTLET ASSY - H/VENT SYSTEM PRIMARY HEAT EXCHANGER HIGH PRESSURE	211-	1
	AN819-10	••SLEEVE -		1
	AN818-10	••NUT -		1
-33	165-53532-11	•O-RING - HEAT & VENT SYS AIR DUCT SEALING		1
-34	43688-400	•CLAMP - (MPC)		1
-35	33500-05	•PICK-UP - TEMPERATURE DUCT MOUNTING (ARM)		1
-36	AN816-4D	•NIPPLE -		1
-37	WB008-1-1/2	•VALVE ASSY - MOTOR-ACTUATED BUTTERFLY(WTR)	001-370	1
	105685	•VALVE - (WTR) (MOTOR-ACTUATED BUTTERFLY) OR	371-	1
	108745	•VALVE - (WTR)		
	165-53532-3	•O-RING - HEAT & VENT SYS AIR DUCT SEALING		1
-38	43688-150	•CLAMP - (MPC)		1
-39	172-53343	•RING - H/VENT SYS AIR-FLOW LIMITING NOZZLE		1
	172-53348	•NOZZLE - H/VENT SYSTEM AIR-FLOW LIMITING		1
-40	191-53315	•GASKET - H/VENT SYS AIR-FLOW LIMITING NOZ	021-300	1
-41	13A-74006	•GASKET - H/VENT SYS AIR-FLOW LIMITING NOZ	311-	1
	5R13-3	•RING - HEAT & VENT SEALING (NAA)		1
-42	AN4-5A	•BOLT -		4
	AN916D416L	•WASHER -		4
	AN365-428	•NUT -		4

FIGURE AND INDEX NUMBER	GROUP HEAT & VENT & PRESSURIZATION SY MAJOR ASSEMBLY COCKPIT PRIMARY HEAT & VENT SYSTEM PART NUMBER	1234567 NOMENCLATURE	CODE	UNITS PER ASSY
271 -43	S84077	•CONNECTOR - (FLO)		1
-44	43688-150	•CLAMP - (MPC)		1
-45	172-53347	•DUCT ASSY - HEAT & VENT SYSTEM FLOW NOZZLE TO HOT BY-PASS		1
	165-53532-3	•O-RING - HEAT & VENT SYS AIR DUCT SEALING		2
-46	43688-150	•CLAMP - (MPC)		2
-47	80150	EXCHANGER OUTLINE - HEAT (ARM) (SEE FIG. 272)		REF
-48	176-53324	TUBE ASSY - H/VENT SYS PRIMARY EXCH COOLING AIR WATER DRAIN (SEE SECTION 3)		REF
-49	172-53362-10	DUCT ASSY - H/VENT SYS PRIMARY EXCH COOLING AIR OVERBOARD (SEE SECTION 3)		REF
-50	13A-74039	ELBOW ASSY - H/VENT SYS ENGINE CONNECTING (SEE SECTION 5)		REF
		(CONTINUED SEE FIG. 272)		

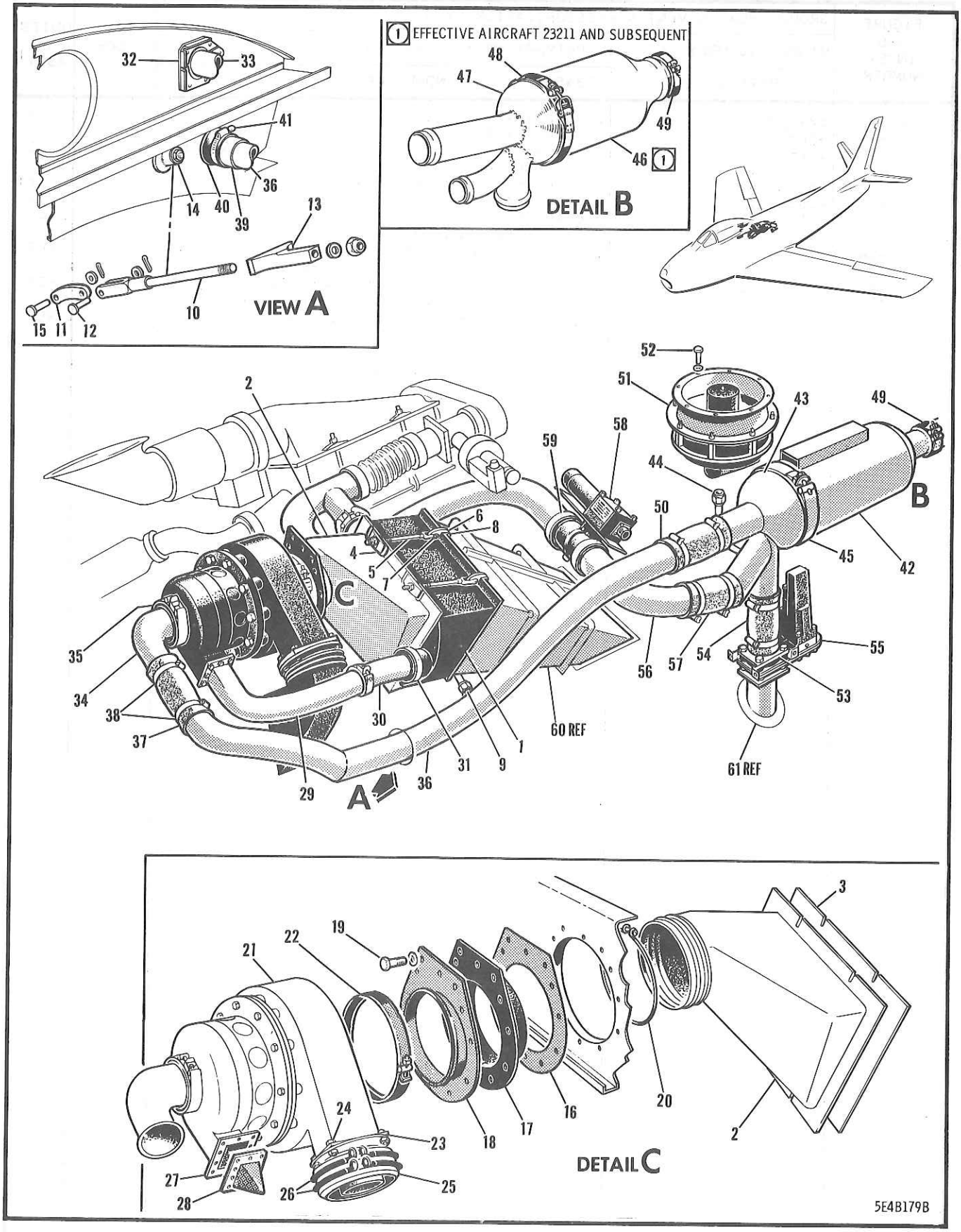

FIGURE 272 COCKPIT SECONDARY HEAT & VENT SYSTEM

FIGURE AND INDEX NUMBER	GROUP HEAT & VENT & PRESSURIZATION SY MAJOR ASSEMBLY COCKPIT SECONDARY HEAT & VENT SYSTEM		CODE	UNITS PER ASSY
	PART NUMBER	1234567 NOMENCLATURE		
272 -	13A-74001	HEAT & VENT SYS EQUIP. INSTL - COMPLETE (SEE FIG. 271)		REF
- 1	80150	•EXCHANGER OUTLINE - HEAT (ARM)		1
- 2	13A-74033	•OUTLET ASSY - H/VENT SYSTEM SECONDARY EXCHANGER COOLING AIR		1
	172-53381	••SCREEN ASSY - HEAT & VENT SYSTEM FAN COOLING AIR INLET		1
- 3	172-53374-3	•SEAL - H/VENT SYS HEAT EXCH DUCT ATTACHING		2
	172-53379	•CLAMP ASSY - H/VENT SYSTEM HEAT EXCHANGER DUCT ATTACHING		3
- 4	172-53375	••RETAINER ASSY - H/VENT SYS HEAT EXCHANGER DUCT ATTACHING		1
- 5	172-53378	••ROD ASSY - H/VENT SYS HEAT EXCH DUCT ATT		1
	AN960D416	••WASHER -		1
	AN365-428	••NUT -		1
- 6	172-53376	••LINK - H/VENT SYS HEAT EXCHANGER DUCT ATT		1
- 7	AN393-17	••PIN -		1
	AN960D10L	••WASHER -		1
	AN380-2-1	••COTTER-PIN -		1
- 8	AN393-23	•PIN -		3
	AN960D10L	•WASHER -		3
	AN380-2-1	•COTTER-PIN -		3
- 9	AN806D10	•PLUG -		1
	172-53379-10	•CLAMP ASSY - H/VENT SYS HEAT EXCH DUCT ATT		1
-10	172-53378-10	••ROD ASSY - H/VENT SYS HEAT EXCH DUCT ATT		1
-11	172-53376	••LINK - H/VENT SYS HEAT EXCHANGER DUCT ATT		1
-12	AN393-17	••PIN -		1
	AN960D10L	••WASHER -		1
	AN380-2-1	••COTTER-PIN -		1
-13	172-53394	••RETAINER ASSY - HEAT & VENT SYSTEM HEAT EXCHANGER DUCT ATTACHING		1
	AN960D416	••WASHER -		1
	AN365-428	••NUT -		1
-14	172-53395	•SEAL ASSY - HEAT & VENT SYSTEM HEAT EXCH ATTACHING BOLT ACCESS HOLE (STA 178)		1
-15	AN393-23	•PIN -		1
	2W1AL18-24-40	•WASHER - PLAIN (NAA)		1
	AN960D10L	•WASHER -		1
	AN365-428	•NUT -		1
	AN380-2-1	•COTTER-PIN -		1
-16	13A-74030	•RETAINER - H/VENT SYSTEM FAN COOLING AIR		1
-17	13A-74031	•CONNECTOR - HEAT & VENT SYSTEM COOLING FAN AIR INLET		1
-18	13A-74032	•FLANGE ASSY - HEAT & VENT SYSTEM FAN COOLING AIR INLET		1
-19	AN3-11A	•BOLT -		9
	AN960D10L	•WASHER -		9
-20	120-53344-13	•CLAMP ASSY - ANTI-ICING SYS EMPENNAGE CONN		1
	AN3-5A	•BOLT - (CLAMP ATTACHING)		1
	AN960D10L	•WASHER -		1
	AN365-1032	•NUT -		1
-21	201120	•TURBINE - (ARM)		1
	165-53532-11	•O-RING - HEAT & VENT SYS AIR DUCT SEALING		1
-22	43907-5.036-S	•CLAMP - (MPC)	001-300	1
	43907-5.036-SH	•CLAMP - (MPC)	301-	1
-23	172-53352	•ADAPTER ASSY - HEAT & VENT SYSTEM FAN COOLING AIR OUTLET		1
	172-53351	•GASKET - H/VENT SYS FAN COOLING AIR OUTLET		1
-24	AN3-5A	•BOLT - (CONNECTOR TO TURBING ATTACHING)		8
	AN960D10L	•WASHER -		4

FIGURE AND INDEX NUMBER	GROUP HEAT & VENT & PRESSURIZATION SY MAJOR ASSEMBLY COCKPIT SECONDARY HEAT & VENT SYSTEM PART NUMBER	1234567 NOMENCLATURE	CODE	UNITS PER ASSY
272 -	AN365-1032	•NUT -		4
-25	151-53612	•CONNECTOR - H/VENT SYS FUS STA 178 ELBOW		1
-26	120-53344-15	•CLAMP ASSY - ANTI-ICING SYS EMPENNAGE CONN		2
	AN520-10R16	•SCREW -		2
	AN365-1032	•NUT -		2
-27	172-53357	•GASKET - H/VENT SYS TURBINE INLET H/PRESS		1
-28	172-53380	•SCREEN ASSY - H/VENT SYSTEM TURBINE INLET		1
-29	13A-74035	•DUCT ASSY - SECONDARY HEAT EXCH TO TURBINE		1
	AN3-6A	•BOLT - (DUCT TO TURBINE ATTACHING)		10
	AN960D10L	•WASHER -		10
	AN365-1032	•NUT -		10
-30	13A-74036	•TUBE ASSY - SECONDARY EXCH OUTLET TO CLAMP		1
	2C33	•CLIP - (NAA)		1
	43688-150	•CLAMP - (MPC)		1
-31	42535-1.500	•CLAMP - (MPC)	001-300	2
	42535-1.500-SH	•CLAMP - (MPC)	301-	2
	165-53532-3	•O-RING - HEAT & VENT SYS AIR DUCT SEALING		1
	22712-1.500	•SLEEVE - (MPC)		1
-32	13A-74092	•RETAINER - H/VENT SYSTEM TURBINE INLET DUCT FUSELAGE STA 178 UPPER		1
-33	13A-74093	•SEAL - H/VENT SYSTEM TURBINE INLET DUCT FUS STA 178 OUTBOARD		1
	AN515-8R7	•SCREW -		4
	AN960D8L	•WASHER -		4
-34	172-53350	•ELBOW - HEAT & VENT SYSTEM TURBINE OUTLET		1
	165-53532-5	•O-RING - HEAT & VENT SYS AIR DUCT SEALING		1
-35	43688-200	•CLAMP - (MPC)		1
-36	13A-74040	•DUCT ASSY - TURBINE TO HEATER DOME		1
-37	140-53316-7	•HOSE - HEAT & VENT SYSTEM CONNECTING		1
-38	AN737TW74	•CLAMP -		2
-39	140-53316-9	•HOSE - HEAT & VENT SYSTEM CONNECTING		1
-40	157-53481	•SEAL - H/VENT AMMUNITION HEATING NOZZLE		1
-41	AN737TW82	•CLAMP -		1
	151-53573-10	•HEATER ASSY - H/VENT SYSTEM COCKPIT BOOST	001-210	1
-42	C885	••HEATER ASSY - (CED)	001-210	1
-43	151-53331-10	••MANIFOLD ASSY - HEAT & VENT SYS COCKPIT BOOST HEATER	001-210	1
-44	151-53517	•••TUBE - HEAT & VENT SYSTEM CABIN PRESSURE SWITCH TAKE-OFF	001-210	1
	AN819-4Z	•••SLEEVE -	001-210	1
	AN818-4D	•••NUT -	001-210	1
-45	22712-4.000	••SLEEVE - (MPC)	001-210	1
	42535-4.000-S	••CLAMP - (MPC)	001-210	1
-46	191-53318	•DUCT - COCKPIT AIR HOT & COLD MIXING	211-	1
-47	151-53331-20	•MANIFOLD ASSY - H/VENT SYS CKPT BOOST HTR	211-	1
	22712-4.000	•SLEEVE - (MPC)	211-	1
-48	42535-4.000-SH	•CLAMP - (MPC)	211-	1
	22712-2.000	•SLEEVE - (MPC)		1
-49	42535-2.000-S	•CLAMP - (MPC)	001-300	3
	42535-2.000-SH	•CLAMP - (MPC)	301-	3
	AN749-2-5	•JUMPER -		2
	AN515-6R6	•SCREW -		1
	AN365-632	•NUT -		1
-50	140-53316-7	•HOSE - HEAT & VENT SYSTEM CONNECTING		1
	AN737TW74	•CLAMP -		2
	172-53359	•GASKET - H/VENT SYS DUMP VALVE MOUNTING		1
-51	172-53358	•VALVE ASSY - HEAT & VENT SYSTEM CABIN AIR PRESSURE VACUUM RELIEF-VALVE & DUMP		1
	172-53358-7	••VALVE ASSY - HEAT & VENT SYSTEM CABIN AIR PRESSURE VACUUM RELIEF-VALVE & DUMP		1

FIGURE AND INDEX NUMBER	GROUP HEAT & VENT & PRESSURIZATION SY MAJOR ASSEMBLY COCKPIT SECONDARY HEAT & VENT SYSTEM PART NUMBER	1234567 NOMENCLATURE	CODE	UNITS PER ASSY
272 -	165-53591	••GASKET - H/VENT SYS DUMP VALVE MOUNTING		1
	550120	••SAFETY-VALVE - SOLENOID DUMP CABIN (PAD)	001-610	1
		OR		
	550120-1	••SAFETY-VALVE - SOLENOID DUMP CABIN (PAD)	001-610	
		OR		
	550120-2	••SAFETY-VALVE - SOLENOID DUMP CABIN (PAD)	001-610	
	550120-5	••SAFETY-VALVE - SOLENOID DUMP CABIN (PAD)	611-	1
		OR		
	516013	••SAFETY-VALVE - (PAD) (CABIN DUMP)	611-	
	AN960D10	••WASHER -		8
	AN365-1032	••NUT -		8
-52	AN3-4A	•BOLT -		8
	AN960D10L	•WASHER -		8
-53	151-53308	•TUBE ASSY - HEAT & VENT SYSTEM COCKPIT PRESSURE & VENT EMERGENCY RAM		1
-54	140-53316-9	•HOSE - HEAT & VENT SYSTEM CONNECTING		1
	AN737TW74	•CLAMP -		2
-55	W7946-2D	•VALVE ASSY - MOTOR-ACTUATED SLIDE (WTR)		1
	AN5H4	•BOLT - (TUBE TO DUCT ATTACHING)		8
	AN960D516	•WASHER -		8
-56	172-53345	•DUCT ASSY - HEAT & VENT SYSTEM HOT-AIR BY-PASS TO HEATER		1
-57	140-53316-5	•HOSE - HEAT & VENT SYSTEM CONNECTING		1
	AN737TW66	•CLAMP -		2
	AN742D24	•CLAMP -		1
	AN520-10R8	•SCREW -		1
	AN365-1032	•NUT -		1
-58	93750-3	•VALVE - SHUT-OFF (ARM)		1
		OR		
	104260	•VALVE - (ARM)		
	165-53532-3	•O-RING - HEAT & VENT SYS AIR DUCT SEALING		2
-59	43688-150	•CLAMP - (MPC)		2
-60	172-53370	DUCT ASSY - H/VENT SYSTEM HEAT EXCHANGER INTAKE (SEE SECTION 3)		REF
-61	151-53311	DUCT ASSY - HEAT & VENT EMERGENCY RAM STA 153 (SEE SECTION 3)		REF
		(CONTINUED SEE FIG. 275)		

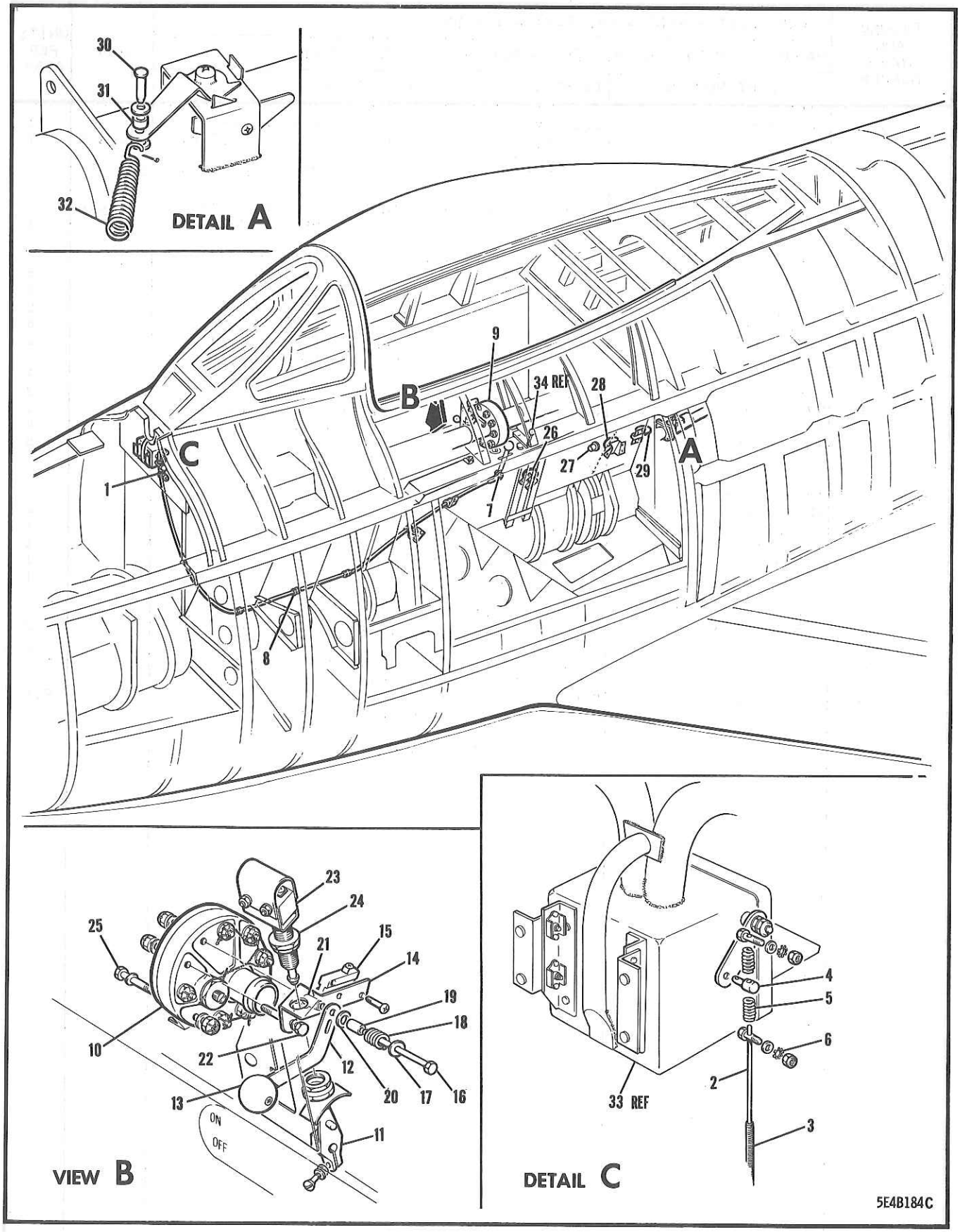

FIGURE 273 COCKPIT HEAT & VENT CONTROLS

FIGURE AND INDEX NUMBER	GROUP HEAT & VENT & PRESSURIZATION SY MAJOR ASSEMBLY COCKPIT HEAT & VENT CONTROLS PART NUMBER	1234567 NOMENCLATURE	CODE	UNITS PER ASSY
273 -	172-53304	CONTROLS INSTL - HEAT & VENT SYSTEM COMPL (SEE SECTION 3)	001-210	NP
	172-53304-10	CONTROLS INSTL - HEAT & VENT SYSTEM COMPL	211-	NP
- 1	140-53364	•CONTROL ASSY - H/VENT SYS FT VALVE & D/FOG		1
- 2	140-53364-3	••WIRE - FOOT VALVE & DEFOGGING CONTROL		1
- 3	140-53364-5	••CASING - FOOT VALVE & DEFOGGING CONTROL		1
- 4	140-53364-7	••PIN - FOOT VALVE & DEFOGGING CONTROL		1
- 5	140-53364-11	••SPRING - FOOT VALVE & DEFOGGING CONTROL		2
	140-53364-9	••BOLT - FOOT VALVE & DEFOGGING CONTROL		2
	AN960-516	••WASHER -		2
- 6	AN936A516	••WASHER -		2
	AN315-5R	••NUT -		2
- 7	3A665-1/8	•END - (SPC) (SWIVEL)		1
	AN380-2-3	•COTTER-PIN -		1
- 8	AN7425C	•CLAMP -		5
	AN515-8R7	•SCREW -		2
	AN515-8R8	•SCREW -		1
	AN515-8R14	•SCREW -		1
	AN3-7A	•BOLT -		1
	AN960D10L	•WASHER -		4
	AN960D10	•WASHER -		1
	NAS43DD-3-32	•SPACER -		1
	NAS43DD-3-16	•SPACER -		1
	AN365-832	•NUT -		4
	AN365-1032	•NUT -		1
- 9	151-53346-10	•VALVE ASSY - HEAT & VENT SYSTEM CENTRE WINDSHIELD DE-ICING SHUT-OFF	001-210	1
	151-53346-20	•VALVE ASSY - HEAT & VENT SYSTEM CENTRE WINDSHIELD DE-ICING SHUT-OFF	211-	1
-10	91750-3	••VALVE ASSY - TUBE & HOSE SHUT-OFF (ARM)		1
-11	172-53334	••CAM ASSY - HEAT & VENT SYSTEM CENTRE WINDSHIELD DE-ICING SHUT-OFF VALVE		1
	AN530-8-8	•••SCREW -		1
	AN935-8L	•••WASHER -		1
	AN960C8	•••WASHER -		1
	140-53323	••ARM ASSY - HEAT & VENT SYSTEM CENTRE WINDSHIELD DE-ICING SHUT-OFF VALVE	001-100	1
	140-53323-10	••ARM ASSY - HEAT & VENT SYSTEM CENTRE WINDSHIELD DE-ICING SHUT-OFF VALVE	101-	1
-12	140-53325	•••ARM - HEAT & VENT SYSTEM CENTRE WNDSHLD DE-ICING SHUT-OFF VALVE		1
-13	NAS120B125	•••KNOB -	001-100	1
	1K4	•••KNOB - CONTROL (NAA)	101-	1
	AN507-832R8	•••SCREW - (KNOB TO ARM ATTACHING)	101-	1
	AN960D8L	•••WASHER -		AR
	151-53346-800	••WASHER - VALVE		1
	152-54208	••SHIELD - ELECTRICAL THREE-UNIT LIMIT SW	001-100	1
	170-54763-10	••INSULATOR - ELECTRICAL AN3234-1 SWITCH	101-210	1
-14	172-53336	••BRACKET - HEAT & VENT SYSTEM CENTRE WINDSHIELD DE-ICING VALVE SWITCH	001-210	1
	172-53336-10	••BRACKET - HEAT & VENT SYSTEM CENTRE WINDSHIELD DE-ICING VALVE SWITCH	211-	1
-15	AN3234-1	••SWITCH - CLASS E LIMIT	001-210	1
	JV7	••ACTUATOR - AUXILIARY (MSC)	001-210	1
	AN515-4R12	••SCREW -	001-210	2
	2W1AL8-8-16	••WASHER - FLAT (NAA)	001-210	2
	AN365-440	••NUT -	001-210	2
-16	AN3-27	••BOLT -	001-210	1
	AN3-30	••BOLT -	211-	1
-17	2W1-13-20-95	••WASHER - PLAIN (NAA)		1

FIGURE AND INDEX NUMBER	GROUP HEAT & VENT & PRESSURIZATION SY MAJOR ASSEMBLY COCKPIT HEAT & VENT CONTROLS PART NUMBER	1234567 NOMENCLATURE	CODE	UNITS PER ASSY
273 -18	151-53630	••SPRING - HEAT & VENT SYSTEM WINDSHIELD DE-ICING SHUT-OFF VALVE		1
-19	4S3-10-21	••SPACER - RIVET (NAA)		1
-20	AN960-616	••WASHER -		1
-21	4S3-10-28	••SPACER - BOLT (NAA)	001-576	1
	NAS43-3-54	••SPACER -	577-	1
	AN960-10	••WASHER -		1
	AN310-3	••NUT -		1
	AN380-2-2	••COTTER-PIN -		1
-22	AN3-12A	••BOLT -		1
	AN960-10	••WASHER -		1
	AN363C1032	••NUT -		1
-23	AN3216-1	••SWITCH - CLASS D LIMIT		1
-24	AN3168-12	••ACTUATOR - CLASS C LIMIT SWITCH		1
	AN3-16A	••BOLT -		1
	4S3-10-22	••SPACER - BOLT (NAA)	001-576	1
	NAS43-3-44	••SPACER -	577-	1
	AN960-10	••WASHER -		1
	AN363C1032	••NUT -		1
	8C4-3	••COVER - SWITCH PROTECTOR (NAA)		1
	AN515-6-18	••SCREW -		2
	AN960C6	••WASHER -		4
	AN365-632	••NUT -		2
-25	AN3-12A	•BOLT -		2
	AN960-10L	•WASHER -		4
	AN363C1032	•NUT -		2
-26	AN210-1A	•PULLEY - (INOPERATIVE)	001-210	1
	AN960-10	•WASHER -	001-210	2
	AN310-3	•NUT -	001-210	1
	AN380-2-3	•PIN -	001-210	1
-27	151-53586	•SEAL - HEAT & VENT SYSTEM AMMUNITION HEAT EMERGENCY CONTROL SHUT-OFF CABLE	001-210	1
-28	AN210-1A	•PULLEY - (INOPERATIVE)	001-210	1
	AN3-6	•BOLT -	001-210	1
	AN960-10	•WASHER -	001-210	2
-29	AN210-1A	•PULLEY - (INOPERATIVE)	001-210	1
	AN3-7	•BOLT -	001-210	1
	AN960-10	•WASHER -	001-210	3
	AN310-3	•NUT -	001-210	1
	AN380-2-3	•COTTER-PIN -	001-210	1
-30	AN393-11	•PIN -	001-210	1
	2W1AL12-20-32	•WASHER - PLAIN (NAA)	001-210	1
-31	NAS43C-3-8	•SPACER -	001-210	1
-32	151-53591	•SPRING - HEAT & VENT SYS AMMUNITION HEAT EMERGENCY SHUT-OFF VALVE CONTROL	001-210	1
	AN960-10L	•WASHER -	001-210	1
	AN380-2-3	•COTTER-PIN -	001-210	1
-33	172-53425	VALVE ASSY - HEAT & VENT SYSTEM WINDSHIELD D/FR & CKPT VENT (SEE SECTION 15)		REF
-34	172-54056	ARM ASSY - ELECTRICAL COCKPIT AIR SELECTOR (SEE SECTION 10)		REF

-000-

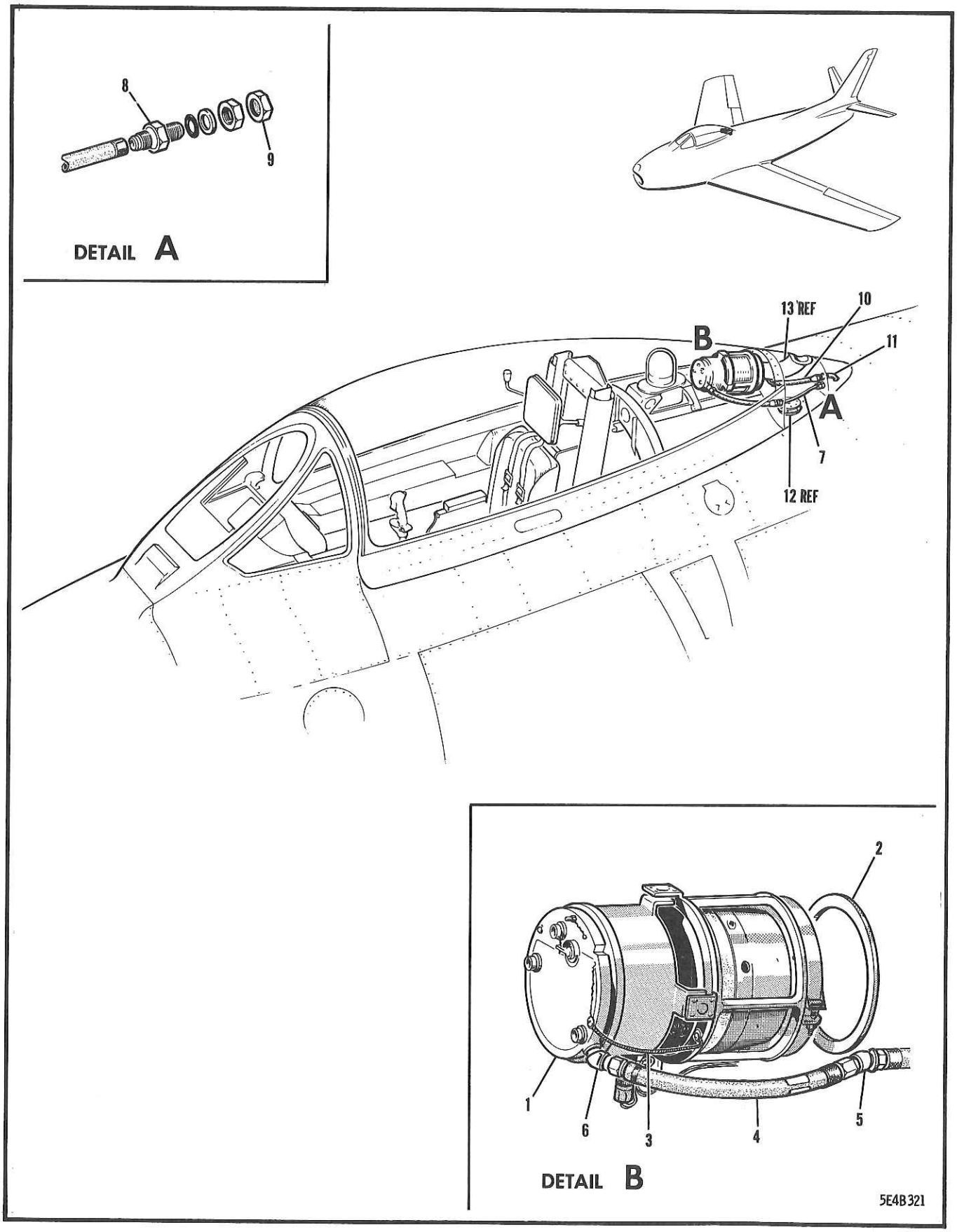

FIGURE 274 COCKPIT HEAT & VENT AIR REGULATOR SYSTEM

FIGURE AND INDEX NUMBER	GROUP HEAT & VENT & PRESSURIZATION SY MAJOR ASSEMBLY COCKPIT HEAT & VENT AIR REGULATOR SYSTEM PART NUMBER	1234567 NOMENCLATURE	CODE	UNITS PER ASSY
274 -	152-31801-40	CANOPY INSTL - COCKPIT ENCLOSURE (SEE SECTION 3)		REF
	176-31801	CANOPY INSTL - COCKPIT ENCLOSURE (SEE SECTION 3)		REF
- 1	102052-6	•REGULATOR ASSY - (ARM) (AIR-PRESSURE)		1
- 2	165-53580	•GASKET - H/VENT SYS REGULATOR MTG FLANGE		1
	43688-450	•CLAMP - (MPC)		1
- 3	AN749-1-5	•JUMPER -	001-210	1
- 4	AN6270-4-8	•HOSE ASSY - DETACHABLE SWIVEL FITTING LP		1
- 5	AN837-4D	•ELBOW -		1
- 6	AN960-716	•WASHER -		1
	AN924-4D	•NUT -		1
- 7	151-53635-137	•LINE ASSY - CANOPY CANTED BHD STA 148-161		1
	151-53567	•FITTING ASSY - HEAT & VENT SYSTEM STATIC LINE FILTER	001-210	1
- 8	151-53567-3	••FITTING - H/VENT SYS STATIC LINE FILTER	001-210	1
	AN960-716L	••WASHER -	001-210	1
	AN924-4D	••NUT -		1
- 9	151-53565	••FILTER ASSY - HEAT & VENT SYSTEM STATIC LINE END-CAP	001-210	1
	151-53565-5	•••SCREEN - FILTER	001-210	1
	AN6289-4D	•••NUT -	001-210	1
	2W1AL28-19-12	•••WASHER - PLAIN (NAA)	001-210	1
-10	AN883-4-34	•HOSE - LOW PRESSURE FLEXIBLE		1
-11	AN883-4-24	•HOSE - LOW PRESSURE FLEXIBLE		1
	AN737-22	•CLAMP -		2
	AN735-8	•CLAMP -		1
	AN520-10R7	•SCREW -		1
	AN365-1032	•NUT -		1
-12	172-53358	VALVE ASSY - H/VENT SYS AIR-PRESSURE VACUUM RELIEF & DUMP (SEE FIG. 272)		REF
-13	172-53411	DUCT ASSY - HEAT & VENT SYSTEM REGULATOR EXHAUST (SEE SECTION 3)		REF
		-000-		

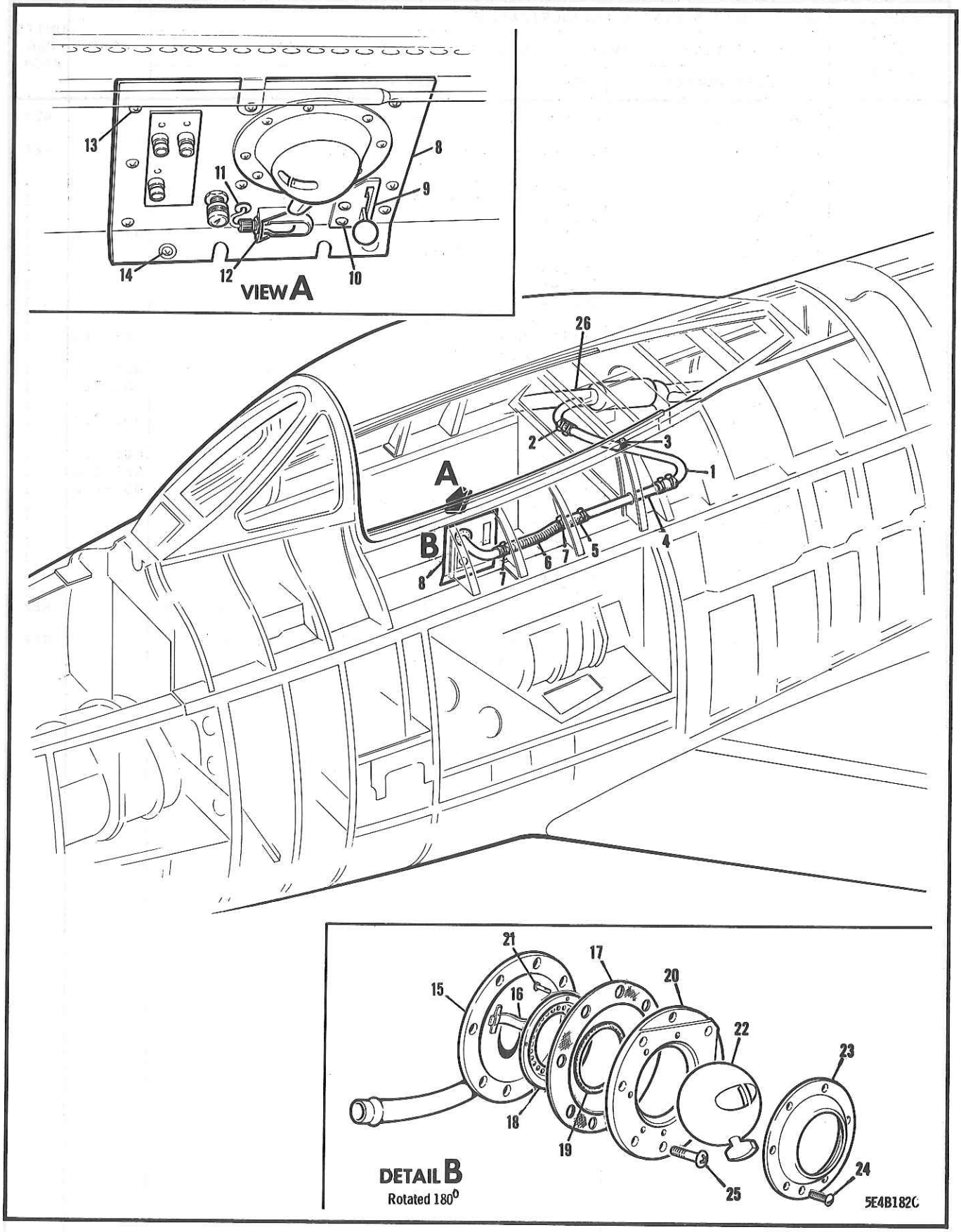

FIGURE 275 COCKPIT VENT SYSTEM

FIGURE AND INDEX NUMBER	GROUP HEAT & VENT & PRESSURIZATION SY MAJOR ASSEMBLY COCKPIT VENT SYSTEM PART NUMBER	1234567 NOMENCLATURE	CODE	UNITS PER ASSY
275 -	13A-74001	HEAT & VENT SYS EQUIP. INSTL - COMPLETE (SEE FIG. 271)		REF
- 1	172-53311-967	.LINE ASSY - CABIN AIR SUPPLY LINE HEATER OUTLET TO PORT SIDE		1
- 2	165-53410-9	.HOSE - HEAT & VENT SYSTEM DUCT CONNECTING		1
	AN737TW46	.CLAMP -		2
- 3	AN742D22C	.CLAMP -		1
	AN520-10R10	.SCREW -		1
	NAS43DD3-16	.SPACER -		1
	NAS43DD3-30	.SPACER -		1
	AN365-1032	.NUT -		2
- 4	172-53311-957	.LINE ASSY - CKPT AIR OUTLET PORT SIDE FWD		1
- 5	172-53424-5	.CONNECTOR - HEAT & VENT AIR DUCT		2
	AN737TW46	.CLAMP -		3
- 6	152-53336-7	.DUCT - H/VENT SYS WIRE SUPPORTED FLEXIBLE	001-610	1
	4D1-4-110	.DUCT - WIRE SUPPORTED FLEXIBLE (NAA)	611-	1
- 7	AN737TW46	.CLAMP -		2
	151-53377-30	.PANEL ASSY - HEAT & VENT SYSTEM PORT SIDE OUTLET CLOSE-OUT		1
- 8	151-53377-9	..PANEL - HEAT & VENT SYSTEM PORT SIDE OUTLET CLOSE-OUT		1
- 9	151-53378	..PLATE - HEAT & VENT SYSTEM VALVE ARM STOP WINDSHIELD DE-ICING		1
-10	AN520-10R8	..SCREW - (PLATE TO PANEL ATTACHING)		2
-11	AN931-4-7	..GROMMET -		1
-12	170-54084	..BRACKET - AN3034-3 COCKPIT LIGHT MOUNTING		1
-13	AN520-10R10	.SCREW - (PANEL ATTACHING)		3
-14	AN515-8R8	.SCREW - (PANEL ATTACHING)		5
	151-53365	.OUTLET INSTL - H/VENT SYS PILOT CKPT VENT STA 99 (PORT SIDE)		NP
-15	151-53488	..OUTLET ASSY - H/VENT SYS PILOT CKPT VENT STA 99 PORT SIDE		1
-16	140-53399	...SPRING - H/VENT SYS PILOT CKPT SIDE OUT.		1
-17	140-53373	..GASKET - H/VENT SYSTEM PILOT COCKPIT SIDE OUTLET STA 99		1
	140-53355	..OUTLET ASSY - H/VENT SYS PILOT CKPT SIDE		1
-18	140-53390	...RETAINER - H/VENT SYS CKPT SIDE OUTLET		1
-19	AN6227B34	...PACKING -		1
-20	140-53389	...PLATE - H/VENT SYS COCKPIT SIDE OUTLET		4
-21	AN530-2R4	...SCREW - (RETAINER TO PLATE ATTACHING)		1
-22	140-53387	...BALL ASSY - H/VENT SYS CKPT SIDE OUTLET		1
-23	140-53388	...COVER - H/VENT SYS COCKPIT SIDE OUTLET		1
-24	AN515-8R4	...SCREW - (COVER TO PLATE ATTACHING)		8
-25	AN509-8R10	..SCREW - (PLATE TO OUTLET ATTACHING)		4
	AN509-8R9	..SCREW - (PLATE TO OUTLET ATTACHING)		2
	AN515-8R10	..SCREW - (PLATE TO OUTLET ATTACHING)		3
-26	172-53404	TUBE ASSY - H/VENT SYS CKPT PRESSURE & VENT STA 125-139 (SEE SECTION 15)		REF
		(CONTINUED SEE FIG. 276)		

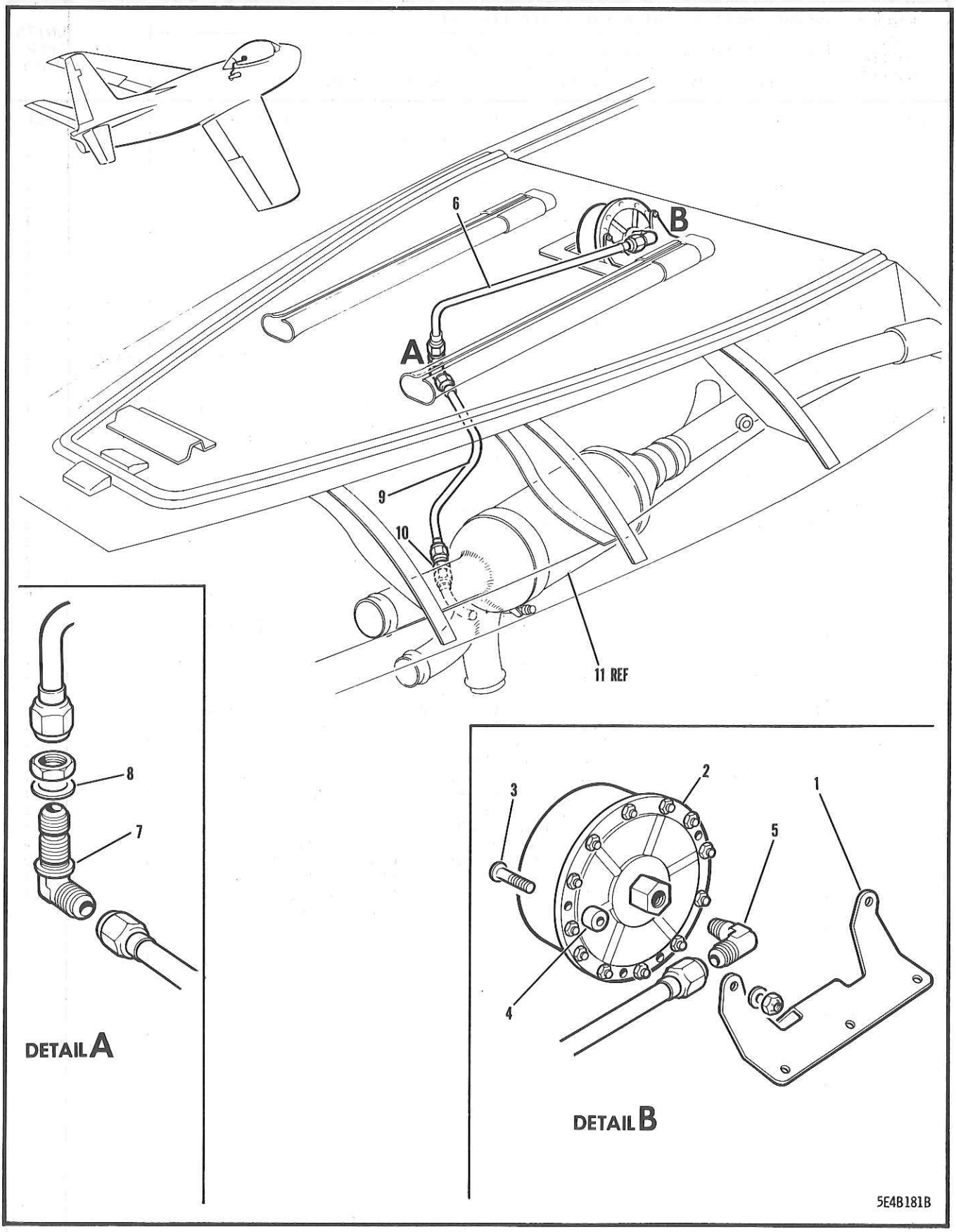

FIGURE 276 COCKPIT PRESSURE SWITCH
(EFFECTIVE AIRCRAFT 23001 TO 23210 INCL)

FIGURE AND INDEX NUMBER	GROUP HEAT & VENT & PRESSURIZATION SY MAJOR ASSEMBLY COCKPIT PRESSURE SWITCH PART NUMBER	1234567 NOMENCLATURE	CODE	UNITS PER ASSY
276 -	13A-74001	HEAT & VENT SYS EQUIP. INSTL - COMPLETE (SEE FIG. 271)		REF
	151-53551-5	.SWITCH ASSY - HEAT & VENT SYSTEM PRESSURE	001-210	1
- 1	151-53552	..BRACKET - HEAT & VENT SYS PRESSURE SWITCH	001-210	1
- 2	PG208B7	..SWITCH - (MHR) (AIR-PRESSURE) (FOR BREAKDOWN SEE EO 40-45KB-4)	001-210	1
- 3	AN500-8-12	..SCREW - (SWITCH TO BRACKET ATTACHING)	001-210	4
- 4	4S3-8-8	..SPACER - BOLT (NAA)	001-210	4
	AN960D8L	..WASHER -	001-210	4
	AN364-832	..NUT -	001-210	4
	2W1SR32-24-40	.WASHER - PLAIN (NAA)	001-210	3
	AN3-3A	.BOLT - (BRACKET ATTACHING)	001-210	3
	AN737TW46	.CLAMP -	001-210	1
	AN735D22	.CLAMP -	001-210	1
	AN520-10R10	.SCREW -	001-210	1
	AN365-1032	.NUT -	001-210	1
- 5	AN822-4D	.ELBOW -	001-210	1
- 6	151-53335-954	.LINE ASSY - PRESSURE SWITCH TO CANOPY DECK (AS PER EO 05-5E-6A/89)	001-210	1
- 7	AN833-4D	.ELBOW -	001-210	1
- 8	AN960D716	.WASHER -	001-210	1
	AN924-4D	.NUT -	001-210	1
- 9	172-53311-53	.LINE ASSY - PRESSURE SWITCH HEATER TO CANOPY DECK FITTING	001-210	1
-10	AN815-4D	.UNION -	001-210	1
-11	151-53573-10	HEATER ASSY - H/VENT SYSTEM COCKPIT BOOST (SEE FIG. 272)		REF
		(CONTINUED SEE FIG. 277)		

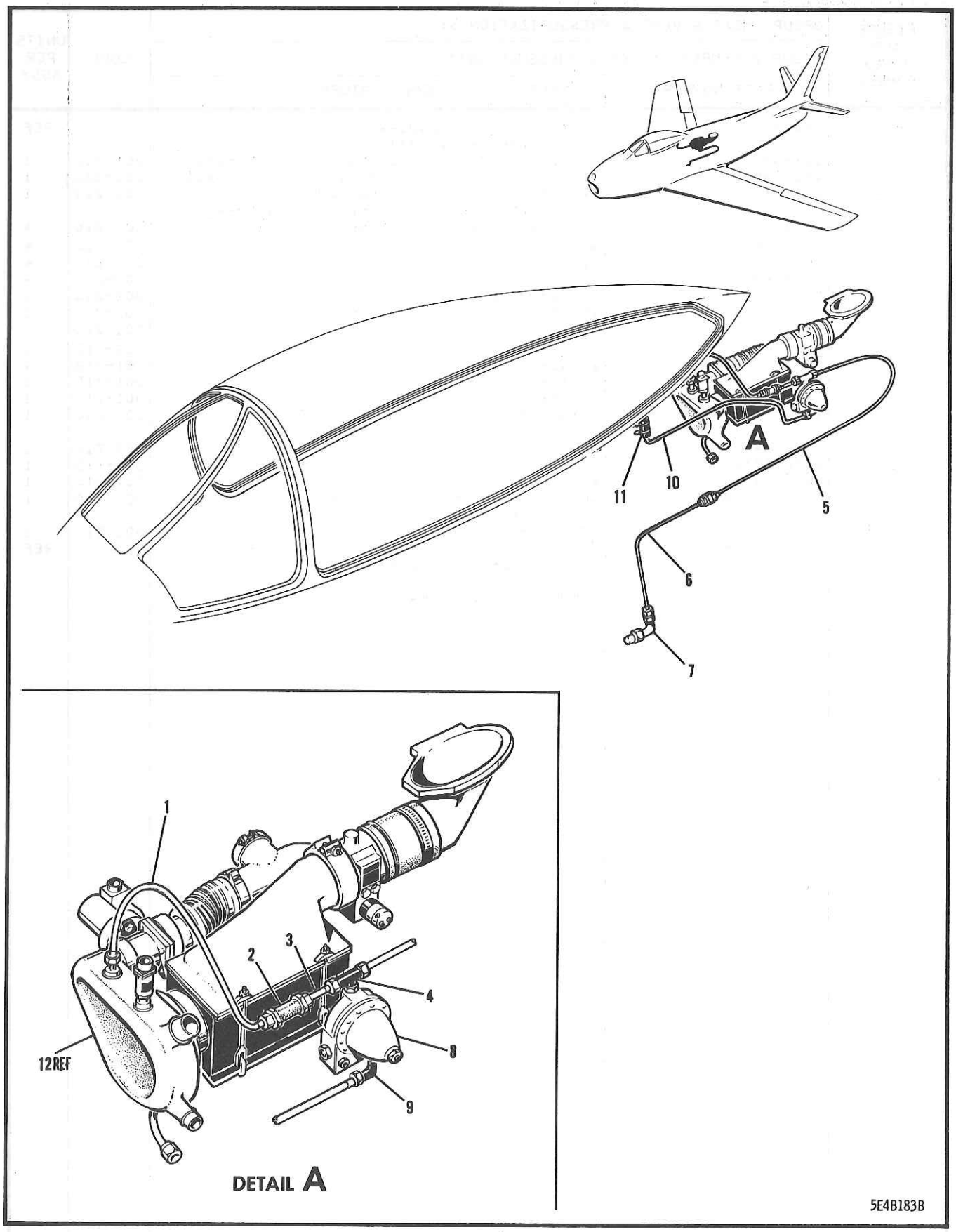

FIGURE 277 CANOPY SEAL

FIGURE AND INDEX NUMBER	GROUP HEAT & VENT & PRESSURIZATION SY MAJOR ASSEMBLY CANOPY SEAL		CODE	UNITS PER ASSY
	PART NUMBER	1234567 NOMENCLATURE		
277 -	13A-74001	HEAT & VENT SYS EQUIP. INSTL - COMPLETE (SEE FIG. 271)		REF
- 1	172-53311-11	.LINE ASSY - HEAT EXCHANGER OUTLET TO CV		1
- 2	259A-4TT	.VALVE - CHECK (JPC)		1
- 3	172-53311-15	.LINE ASSY - CHECK VALVE TO PRESSURE RGLR (CANOPY)		1
- 4	AN825-4D	.TEE -		1
- 5	172-53311-955	.LINE ASSY - CANOPY PRESS. RGLR TO STA 135		1
	AN815-4D	.UNION -		1
- 6	170-53335-952	.LINE ASSY - FUS STA 133 TO CANOPY GROUND PRESSURE FITTING FUSELAGE STA 126		1
	AN742D4	.CLAMP -		4
	AN520-10R8	.SCREW -		2
	AN365-1032	.NUT -		2
- 7	AN833-4D	.ELBOW -		1
	AN960D716	.WASHER -		1
	AN924-4D	.NUT -		1
	172-53409	.BRACKET - H/VENT SYSTEM CANOPY PRESSURE REGULATOR SUPPORT		1
- 8	10212-200	.REGULATOR - (CMC) (RELIEF-VALVE PRESSURE)		1
	AN3-4A	.BOLT -		2
	AN3-16A	.BOLT -		2
	AN960D10L	.WASHER -		4
	AN365-1032	.NUT -		2
- 9	AN822-4D	.ELBOW -		1
-10	172-53311-7	.LINE ASSY - CANOPY SEAL TO PRESSURE RGLR		1
	MS21919DG4	.CLAMP - LOOP TYPE SUPPORT CUSHIONED (AS PER EO 05-5E-6A/157) OR		1
	MS21919WDG4	.CLAMP - LOOP TYPE SUPPORT CUSHIONED		
	AN515-8R18	.SCREW -		1
	NAS43DD-3-28	.SPACER -		1
	AN365-832	.NUT -		1
-11	3H2L-4-10	.HOSE - (NAA)		1
	AN737TW22	.CLAMP -		2
-12	172-53363-10	OUTLET ASSY - H/VENT SYS PRIMARY HEAT EXCH HIGH PRESSURE (SEE FIG. 271)		REF
		(CONTINUED SEE FIG. 278)		

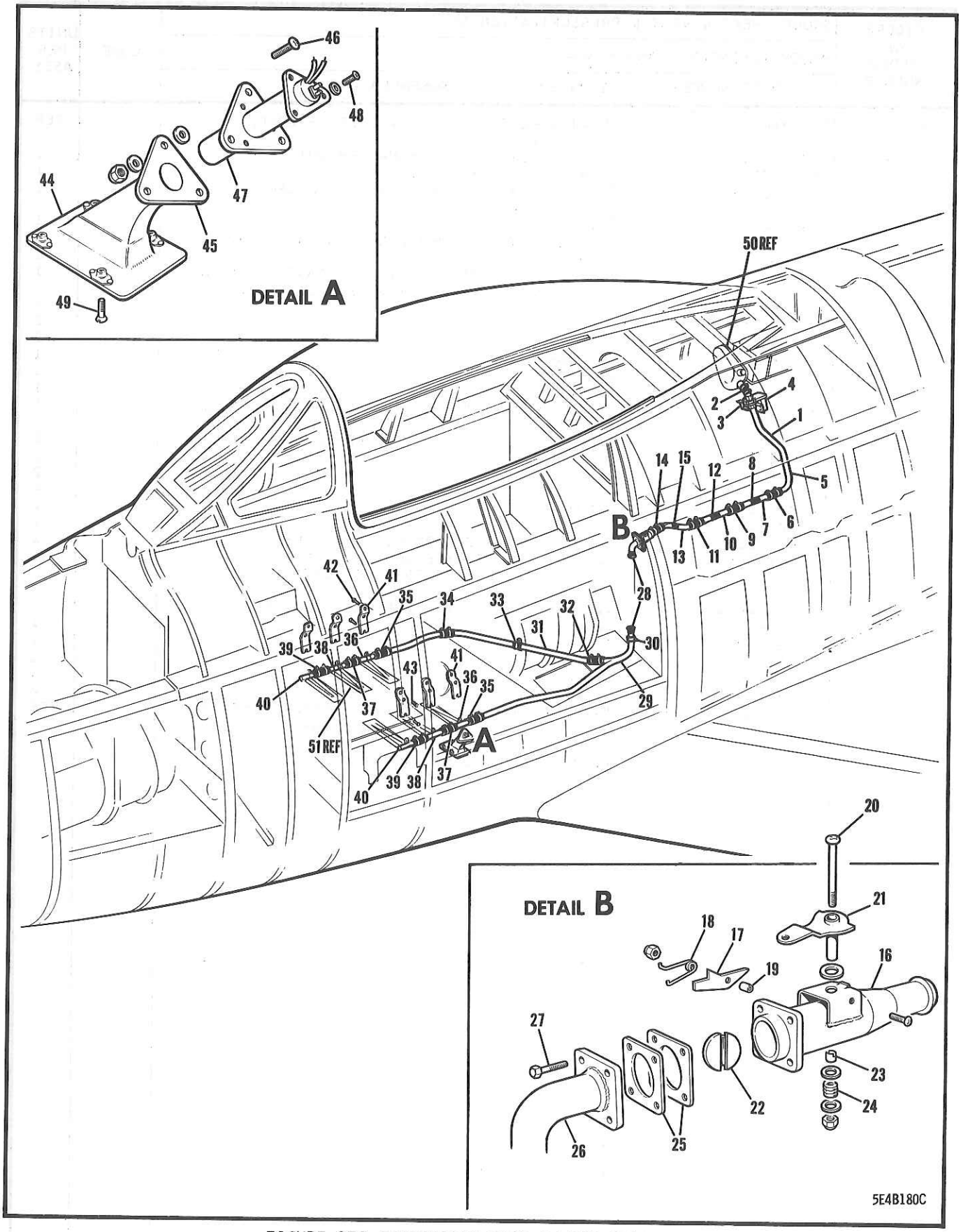

FIGURE 278 AMMUNITION HEAT & VENT SYSTEM
(EFFECTIVE AIRCRAFT 23001 TO 23210 INCL)

FIGURE AND INDEX NUMBER	GROUP HEAT & VENT & PRESSURIZATION SY MAJOR ASSEMBLY AMMUNITION HEAT & VENT SYSTEM PART NUMBER	1234567 NOMENCLATURE	CODE	UNITS PER ASSY
278 -	13A-74001	HEAT & VENT SYS EQUIP. INSTL - COMPLETE (SEE FIG. 271)		REF
- 1	172-53408	•DUCT ASSY - H/VENT SYSTEM AMMUNITION HEATING FUSELAGE STA 161	001-210	1
- 2	172-53424-5	•CONNECTOR - HEAT & VENT AIR DUCT	001-210	1
	AN737TW46	•CLAMP -	001-210	2
- 3	172-53410	•BRACKET ASSY - H/VENT SYS AMMUNITION MOD VALVE SUPPORT	001-210	1
- 4	WE443-10DM	•VALVE ASSY - MOTOR-ACTUATED SLIDE (WTR)	001-210	1
	AN3-4A	•BOLT -	001-210	2
	AN3-14A	•BOLT -	001-210	2
	AN960D10	•WASHER -	001-210	4
	AN365-1032	•NUT -	001-210	2
- 5	172-53311-31	•LINE ASSY - AMMUNITION MODIFICATION VALVE TO STA 165	001-210	1
- 6	172-53424-5	•CONNECTOR - HEAT & VENT AIR DUCT	001-210	1
	AN737TW46	•CLAMP -	001-210	2
- 7	172-53311-51	•LINE ASSY - AMMUNITION HEATING STA 165-158	001-210	1
- 8	140-53316-3	•HOSE - HEAT & VENT SYSTEM CONNECTING	001-210	1
- 9	172-53424-5	•CONNECTOR - HEAT & VENT AIR DUCT	001-210	1
	AN737TW46	•CLAMP -	001-210	2
-10	172-53311-37	•LINE ASSY - AMMUNITION HEATING STA 158-137	001-210	1
-11	172-53424-5	•CONNECTOR - HEAT & VENT AIR DUCT		1
	AN737TW46	•CLAMP -	001-210	2
-12	140-53316-21	•HOSE - HEAT & VENT SYSTEM CONNECTING	001-210	2
-13	172-53311-41	•LINE ASSY - AMMUNITION STA 137 TO EMERGENCY SHUT-OFF	001-210	1
-14	172-53424-5	•CONNECTOR - HEAT & VENT AIR DUCT	001-210	1
	AN737TW46	•CLAMP -	001-210	2
-15	140-53316-21	•HOSE - HEAT & VENT SYSTEM CONNECTING	001-210	1
	151-53575-1	•VALVE ASSY - H/VENT SYSTEM AMO HEATING	001-210	1
-16	151-53575-15	••VALVE ASSY - H/VENT SYSTEM AMO HEATING	001-210	1
-17	151-53579	••LEVER - H/VENT SYS AMO HEATING VALVE LKG	001-210	1
-18	151-53578	••SPRING - H/VENT SYSTEM AMO HEATING VALVE	001-210	1
-19	4S4D4-4	••SPACER - RIVET (NAA)	001-210	1
	AN515-4R7	••SCREW -	001-210	1
	AN365-440	••NUT -		1
-20	AN515-8R42	••SCREW -	001-210	1
	AN365-832	••NUT -	001-210	1
-21	151-53582	••ARM ASSY - HEAT & VENT AMO HEATING VALVE	001-210	1
	AN960-516	••WASHER -	001-210	1
-22	151-53576	••BUTTERFLY - H/VENT SYS AMO HEATING VALVE	001-210	1
-23	152-53525-5	••HUB - H/VENT SYSTEM AMO HEATING VALVE	001-210	1
	AN960-516L	••WASHER -	001-210	2
-24	152-53522	••SPRING - HEAT & VENT SYSTEM AIR VALVE	001-210	1
-25	151-53574	•GASKET - H/VENT SYSTEM AMO HEATING VALVE	001-210	2
-26	151-53583	•DUCT ASSY - H/VENT SYSTEM AMO HEATING EMERGENCY VALVE OUTLET (REWORK AS PER EO 05-5E-6A/205)	001-210	2
-27	AN3-10A	•BOLT -	001-210	4
	AN365-1032	•NUT -	001-210	4
-28	12	•CAPLUG - (PRO) (AS PER EO 05-5E-6A/205)	001-210	2
-29	151-53535-10	•DUCT ASSY - HEAT & VENT SYSTEM AMMUNITION HEAT LH & RH TAKE-OFF (REWORK AS PER EO 05-5E-6A/205)	001-210	1
-30	AN742D18	•CLAMP -	001-210	1
	AN742D16	•CLAMP -	001-210	1
	NAS221-8	•SCREW -	001-210	2
	AN365-1032	•NUT -	001-210	2
-31	151-53335-87	•DUCT ASSY - AMMUNITION HEAT DUCT TO RH	001-210	1

FIGURE AND INDEX NUMBER	GROUP HEAT & VENT & PRESSURIZATION SY MAJOR ASSEMBLY AMMUNITION HEAT & VENT SYSTEM PART NUMBER	1234567 NOMENCLATURE	CODE	UNITS PER ASSY
278 -32	140-53316-3	•HOSE - HEAT & VENT SYSTEM CONNECTING	001-210	1
	AN737TW46	•CLAMP -	001-210	2
-33	AN742D16	•CLAMP -	001-210	2
	NAS221-8	•SCREW -	001-210	2
	AN365-1032	•NUT -	001-210	2
-34	140-53316-15	•HOSE - HEAT & VENT SYSTEM CONNECTING	001-210	1
	AN737TW46	•CLAMP -	001-210	2
-35	140-53316-11	•HOSE - HEAT & VENT SYSTEM CONNECTING	001-210	2
	AN737TW46	•CLAMP -	001-210	4
	13A-74047	•STRIP - BONDING	001-210	4
-36	151-53627	•TUBE ASSY - H/VENT SYSTEM AMMUNITION HEATING OUTLET FUSELAGE STA 108-106	001-210	2
-37	140-53316-3	•HOSE - HEAT & VENT SYSTEM CONNECTING	001-210	2
	AN737TW46	•CLAMP -	001-210	4
-38	151-53627-10	•TUBE ASSY - H/VENT SYSTEM AMMUNITION HEATING OUTLET FUSELAGE STA 93 TO 99	001-210	2
-39	140-53316-3	•HOSE - HEAT & VENT SYSTEM CONNECTING	001-210	2
	AN737TW46	•CLAMP -	001-210	4
-40	151-53628	•TUBE ASSY - H/VENT SYSTEM AMMUNITION HEATING OUTLET FUSELAGE STA 86 TO 93	001-210	2
-41	151-53625	•CLAMP - H/VENT SYS AMO HEATING OUTLET	001-210	6
-42	7S14-1032C11A	•SCREW - ROUNDHEAD CORROSION-RESISTANT(NAA)	001-210	6
-43	7S14-1032C8A	•SCREW - ROUNDHEAD CORROSION-RESISTANT(NAA)	001-210	6
	151-53523-10	•HOUSING ASSY - H/VENT SYSTEM AMO HEATING THERMOSWITCH COMPLETE	001-210	1
-44	151-53520	••HOUSING - H/VENT SYSTEM AMMUNITION HEAT THERMOSWITCH	001-210	1
-45	151-53521	••PLATE - H/VENT SYS AMO HEAT THERMOSWITCH	001-210	1
-46	AN515-8R12	••SCREW -	001-210	3
	AN960-8	••WASHER -	001-210	6
	AN365-832	••NUT -	001-210	3
-47	18420-0-45	••THERMOSWITCH - (FEN) (TEMP SETTING)	001-210	1
-48	AN500A8-7	••SCREW -	001-210	3
	AN960-8	••WASHER -	001-210	3
-49	AN509-8R8	•SCREW - (HOUSING ATTACHING)	001-210	4
-50	172-53363-10	OUTLET ASSY - H/VENT SYSTEM HIGH PRESSURE (SEE FIG. 271)		REF
-51	151-53539-7	OUTLET ASSY - H/VENT SYS AMMUNITION HEATING (SEE SECTION 3)		REF

(CONTINUED SEE SECTION 15)

SECTION 15

ANTI-ICING & DE-ICING SYSTEM

TABLE OF CONTENTS

FIGURE	TITLE	PAGE
279	COCKPIT WINDSHIELD ANTI-ICING SYSTEM	1150
280	COCKPIT WINDSHIELD INNER DEFROSTING SYSTEM	1154
281	COCKPIT ENCLOSURE DEFROSTING SYSTEM	1158
282	FUEL FILTER ALCOHOL DE-ICING SYSTEM (EFFECTIVE AIRCRAFT 23001 TO 23210 INCL)	1162
283	FUEL FILTER ALCOHOL DE-ICING TANK (EFFECTIVE AIRCRAFT 23001 TO 23210 INCL)	1166
284	FUEL FILTER ALCOHOL DE-ICING PUMP (EFFECTIVE AIRCRAFT 23001 TO 23210 INCL)	1168

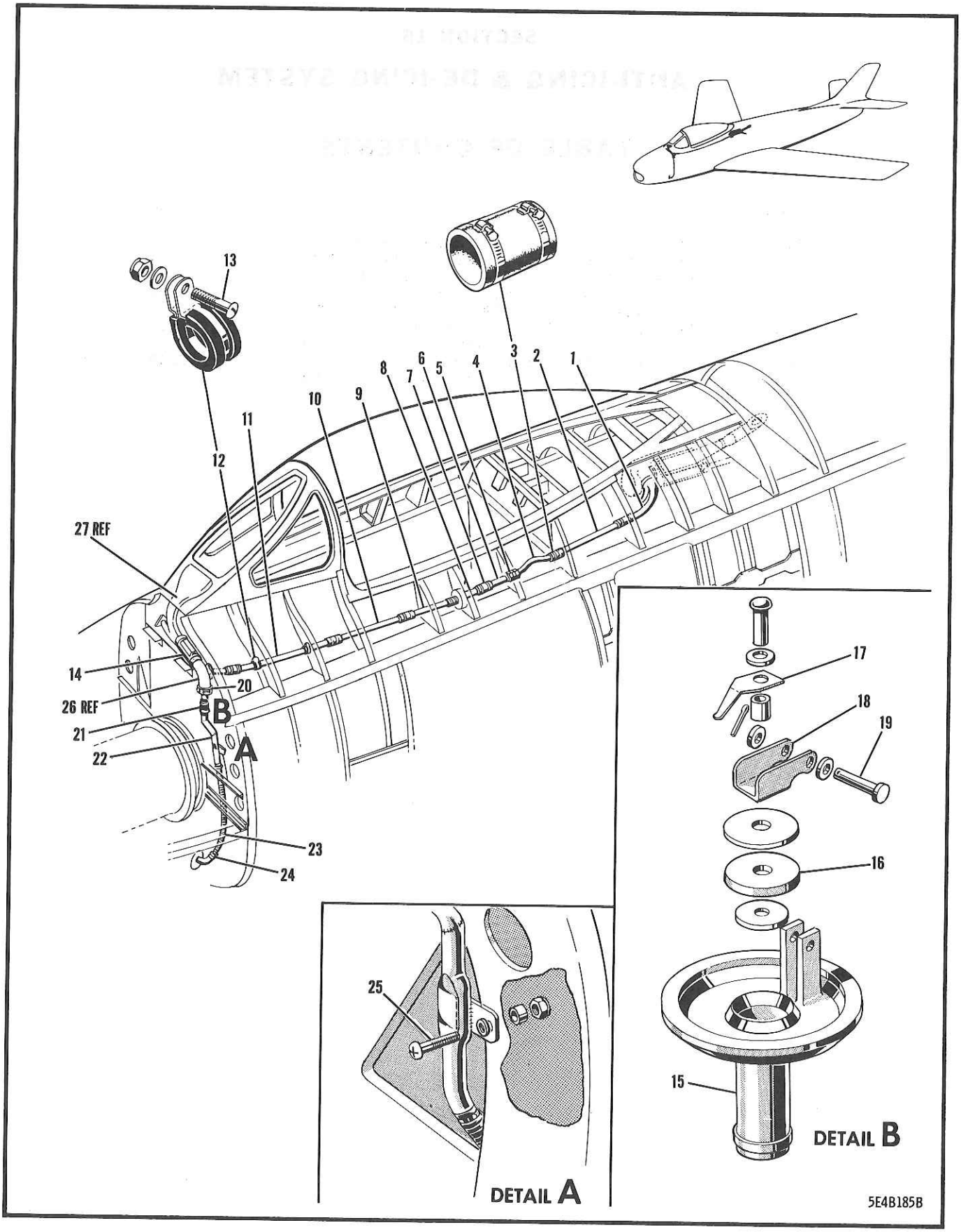

FIGURE 279 COCKPIT WINDSHIELD ANTI-ICING SYSTEM

FIGURE AND INDEX NUMBER	GROUP ANTI-ICING & DE-ICING SYSTEM MAJOR ASSEMBLY COCKPIT WINDSHIELD ANTI-ICING SYSTEM PART NUMBER	1234567 NOMENCLATURE	CODE	UNITS PER ASSY
279 -	13A-74001	HEAT & VENT SYS EQUIP. INSTL - COMPLETE (SEE SECTION 14)		REF
- 1	172-53407	.DUCT ASSY - HEAT & VENT SYSTEM CANOPY DEFROST & DE-ICE FUSELAGE STA 161	A43	1
	13A-74094	.DUCT ASSY - HEAT & VENT SYSTEM CANOPY DEFROST & DE-ICE FUSELAGE STA 161	D14	1
	42737-1.500	.SLEEVE - CHANNEL BAND (MPC)		1
	42535-1.500-S	.CLAMP - (MPC)	001-300	1
	42535-1.500-SH	.CLAMP - (MPC)	301-	1
- 2	172-53341-963	.LINE ASSY - FUSELAGE STA 124 TO 140		1
	140-53316-3	.HOSE - HEAT & VENT CONNECTING (MAKE FROM K7139 (DOM))		1
- 3	172-53424-5	.CONNECTOR - HEAT & VENT AIR DUCT		1
	AN737TW46	.CLAMP -		2
- 4	172-53341-961	.LINE ASSY - PRESSURE BULKHEAD FUS STA 124		1
	172-53424-5	.CONNECTOR - HEAT & VENT AIR DUCT		1
	AN737TW46	.CLAMP -		2
	151-53338	.GASKET - HEAT & VENT SYSTEM WINDSHIELD ANTI-ICING STA 113		2
- 5	AN832-16D	.UNION -		1
	AN924-16D	.NUT -		1
	2W1AC85-52-51	.WASHER - PLAIN (NAA)		2
- 6	151-53335-952	.LINE ASSY - WINDSHIELD DE-ICING FUSELAGE STA 106 TO 113		1
- 7	172-53424-5	.CONNECTOR - HEAT & VENT AIR DUCT		1
	AN737TW46	.CLAMP -		2
- 8	151-53335-950	.LINE ASSY - WINDSHIELD DE-ICING FUSELAGE STA 100 TO 106		1
- 9	172-53341-7	.LINE ASSY - FUS STA 85 TO SHUT-OFF VALVE		1
	140-53316-3	.HOSE - HEAT & VENT CONNECTING (MAKE FROM K7139 (DOM))		2
	AN737TW46	.CLAMP -		4
-10	172-53341-5	.LINE ASSY - FUSELAGE STA 70 TO 85		1
	165-53410-9	.HOSE - HEAT & VENT SYSTEM DUCT CONNECTING		1
	AN737TW44	.CLAMP -		2
-11	172-53341-3	.LINE ASSY - FUSELAGE STA 55 TO 70		1
	165-53410-9	.HOSE - HEAT & VENT SYSTEM DUCT CONNECTING		1
	AN737TW44	.CLAMP -		2
-12	AN742D22C	.CLAMP -		2
-13	AN515-8R9	.SCREW -		2
	AN960D8	.WASHER -		2
	AN365-832	.NUT -		2
-14	C883	.HEATER ASSY - 2 KW (COL)	001-210	1
	191-53317	.DUCT - H/VENT SYSTEM WINDSHIELD ANTI-ICE	211-	1
	22712-200	.SLEEVE - (MPC)		2
	42535-2.000-S	.CLAMP - (MPC)	001-300	2
	42535-2.000-SH	.CLAMP - (MPC)	301-	2
	AN749-3-4	.JUMPER -		1
	172-53340	.VALVE ASSY - H/VENT SYSTEM WINDSHIELD ANTI-ICE WATER TRAP	001-300	1
-15	172-53330	..HOUSING - H/VENT SYSTEM WINDSHIELD ANTI-ICE DRAIN VALVE	001-300	1
	172-53340-3	..VALVE ASSY - H/VENT SYSTEM WINDSHIELD ANTI-ICE WATER TRAP	001-300	1
	2W1AL9-18-40	...WASHER - PLAIN (NAA)	001-300	1
-16	172-53331	...SEAL - H/VENT SYSTEM WINDSHIELD ANTI-ICE WATER DRAIN CHECK VALVE	001-300	1
	2W1AL17-32-40	...WASHER - PLAIN (NAA)	001-300	1
-17	172-53399	...SPRING - H/VENT SYSTEM WINDSHIELD ANTI-ICE WATER TRAP VALVE	001-300	1

FIGURE AND INDEX NUMBER	GROUP ANTI-ICING & DE-ICING SYSTEM MAJOR ASSEMBLY COCKPIT WINDSHIELD ANTI-ICING SYSTEM PART NUMBER	1234567 NOMENCLATURE	CODE	UNITS PER ASSY
279 -	NAS42DD4-13	•••SPACER -	001-300	1
	2W1AL9-12-40	•••WASHER - PLAIN (NAA)	001-300	1
-18	172-53329	•••GATE - H/VENT SYSTEM WINDSHIELD ANTI-ICE WATER DRAIN CHECK VALVE	001-300	1
-19	AN392-23	••PIN -	001-300	1
	AN960D6	••WASHER -	001-300	2
	AN380-2-2	••COTTER-PIN -	001-300	1
-20	165-53532-5	•O-RING - H/VENT SYSTEM AIR DUCT SEALING	001-300	1
	43688-200	•CLAMP - (MPC)	001-300	1
-21	3H2L10-11	•HOSE - (NAA)		1
	AN737TW44	•CLAMP -		2
-22	172-53398	•DUCT ASSY - H/VENT SYSTEM WINDSHIELD ANTI-ICE WATER DRAIN		1
-23	152-53336-9	•DUCT - H/VENT SYS WIRE SUPPORTED FLEXIBLE	001-300	1
	152-53336-47	•DUCT - H/VENT SYS WIRE SUPPORTED FLEXIBLE	301-610	1
	4D1-8-280	•DUCT - WIRE SUPPORTED FLEXIBLE (NAA)	611-	1
-24	AN737TW34	•CLAMP -		2
-25	AN520-10R22	•SCREW -		1
	NAS43DD-3-48	•SPACER -		1
	AN960D10	•WASHER -		1
	AN365-1032	•NUT -		1
-26	172-53327	TRAP ASSY - H/VENT SYS WINDSHIELD ANTI-ICE WATER (SEE SECTION 3)		REF
-27	172-53326	OUTLET ASSY - H/VENT SYS WNDSHLD ANTI-ICE (SEE SECTION 3)		REF
		(CONTINUED SEE FIG. 280)		

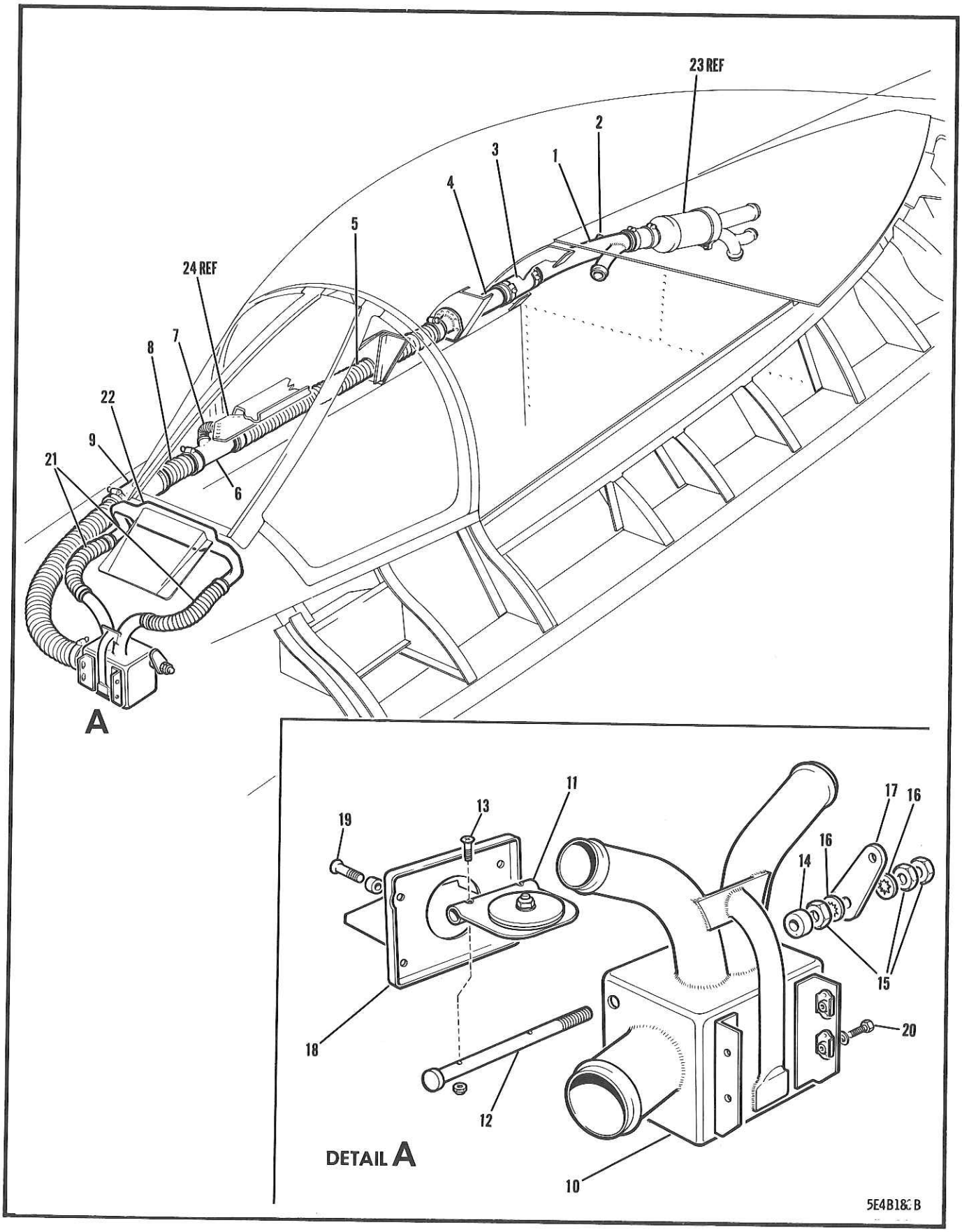

FIGURE 280 COCKPIT WINDSHIELD INNER DEFROSTING SYSTEM

FIGURE AND INDEX NUMBER	GROUP ANTI-ICING & DE-ICING SYSTEM MAJOR ASSEMBLY COCKPIT WINDSHIELD INNER DEFROSTING SYSTEM		CODE	UNITS PER ASSY
	PART NUMBER	1234567 NOMENCLATURE		
280 -	13A-74001	HEAT & VENT SYS EQUIP. INSTL - COMPLETE (SEE SECTION 14)		REF
- 1	172-53404	•TUBE ASSY - H/VENT SYS CKPT PRESS. & VENT STA 125 TO STA 139		1
- 2	33500-05	•PICK-UP - TEMPERATURE DUCT MTG (ARM)		1
	140-53316-950	•HOSE - HEAT & VENT SYSTEM CONNECTING (MAKE FROM K7139 (DOM))	371-	1
- 3	140-53316-7	•HOSE - HEAT & VENT SYSTEM CONNECTING (MAKE FROM K7139 (DOM))		1
	AN737TW74	•CLAMP -		2
- 4	151-53545	•TUBE ASSY - H/VENT SYSTEM COCKPIT PRESSURE & VENT STA 116 TO 125		1
	140-53316-950	•HOSE - HEAT & VENT SYSTEM CONNECTING (MAKE FROM K7139 (DOM))		1
	140-53316-7	•HOSE - HEAT & VENT SYSTEM CONNECTING (MAKE FROM K7139 (DOM))		1
	AN737TW74	•CLAMP -		2
- 5	152-53336-5	•DUCT - H/VENT SYS WIRE SUPPORTED FLEXIBLE	001-610	1
	4D1-8-214	•DUCT - WIRE SUPPORTED FLEXIBLE (NAA)	611-	1
	AN737TW74	•CLAMP -		2
- 6	152-53523	•TUBE ASSY - HEAT & VENT SYSTEM CANOPY DEFROSTER TAKE-OFF		1
	AN737TW74	•CLAMP -		1
- 7	152-53336-21	•DUCT - H/VENT SYS WIRE SUPPORTED FLEXIBLE		1
	AN737TW46	•CLAMP -		2
- 8	152-53336-3	•DUCT - H/VENT SYS WIRE SUPPORTED FLEXIBLE	001-610	1
	4DJ-8-450	•DUCT - WIRE SUPPORTED FLEXIBLE (NAA)	611-	1
- 9	140-53316-23	•HOSE - HEAT & VENT SYS CONN (PROTECTING) (MAKE FROM K7139 (DOM))		1
	AN737TW74	•CLAMP -		2
	172-53425	•VALVE ASSY - HEAT & VENT SYSTEM WINDSHIELD DEFROSTING & COCKPIT VENTILATING		1
-10	172-53434	••BOX ASSY - H/VENT SYS WNDSHLD DEFROSTING & COCKPIT VENTILATING VALVE		1
-11	172-53429	••FLAP ASSY - H/VENT SYS WNDSHLD DEFROSTING & COCKPIT VENTILATING VALVE		1
	172-53429-3	•••FLAP - H/VENT SYSTEM WNDSHLD DEFROSTING & COCKPIT VENTILATING VALVE		1
	172-53429-11	•••FLAP ASSY - H/VENT SYS WNDSHLD D/FR & COCKPIT VENTILATING VALVE		2
	2W1AL9-66-32	••••WASHER - PLAIN (NAA)		2
	172-53333	••••SEAL - H/VENT SYS WINDSHIELD D/FR & COCKPIT VENTILATING VALVE		1
	2W1AL9-52-32	•••WASHER - PLAIN (NAA)		1
	NAS42DD5-6	•••SPACER -		1
	AN515-6R8	•••SCREW -		1
	2W1AL9-12-32	•••WASHER - PLAIN (NAA)		1
	AN365-632	•••NUT -		1
-12	151-53435	••SHAFT - H/VENT SYS WNDSHLD DEFROSTING & COCKPIT VENTILATING VALVE		1
-13	AN515-4R8	••SCREW -		2
	AN365-440	••NUT -		2
-14	4S3-416-10	••SPACER - BOLT (NAA)		1
-15	AN316-4R	••NUT -		3
-16	AN936A416H	••WASHER -		2
-17	151-53431	••ARM - H/VENT SYS WINDSHIELD DEFROSTING & COCKPIT VENTILATING VALVE		1
-18	172-53433	••COVER ASSY - H/VENT SYS WNDSHLD D/FR & COCKPIT VENTILATING VALVE		1
	NAS43DD-3-16	••SPACER -		2

FIGURE AND INDEX NUMBER	GROUP ANTI-ICING & DE-ICING SYSTEM MAJOR ASSEMBLY COCKPIT WINDSHIELD INNER DEFROSTING SYSTEM PART NUMBER	1234567 NOMENCLATURE	CODE	UNITS PER ASSY
280 -19	AN530-10R10	••SCREW -		1
	AN520-10R10	••SCREW -		1
	AN530-10R8	••SCREW -		2
-20	AN3-3A	•BOLT -		4
	AN960D10L	•WASHER -		4
-21	152-53336-33	•DUCT - H/VENT SYS WIRE SUPPORTED FLEXIBLE	001-610	2
	4D1-4-122	•DUCT - WIRE SUPPORTED FLEXIBLE (NAA)	611-	2
	AN737TW46	•CLAMP -		4
-22	172-53432	•MANIFOLD - H/VENT SYS ARMOUR GLASS DEFROST		1
	AN520-10R8	•SCREW -		2
	AN960D10	•WASHER -		2
	AN365-1032	•NUT -		2
-23	151-53573-10	HEATER ASSY - H/VENT SYSTEM COCKPIT BOOSTER (SEE SECTION 14)		REF
-24	152-53528-51	OUTLET ASSY - H/VENT SYS CANOPY DEFROSTER VALVE (SEE SECTION 3)		REF
		-000-		

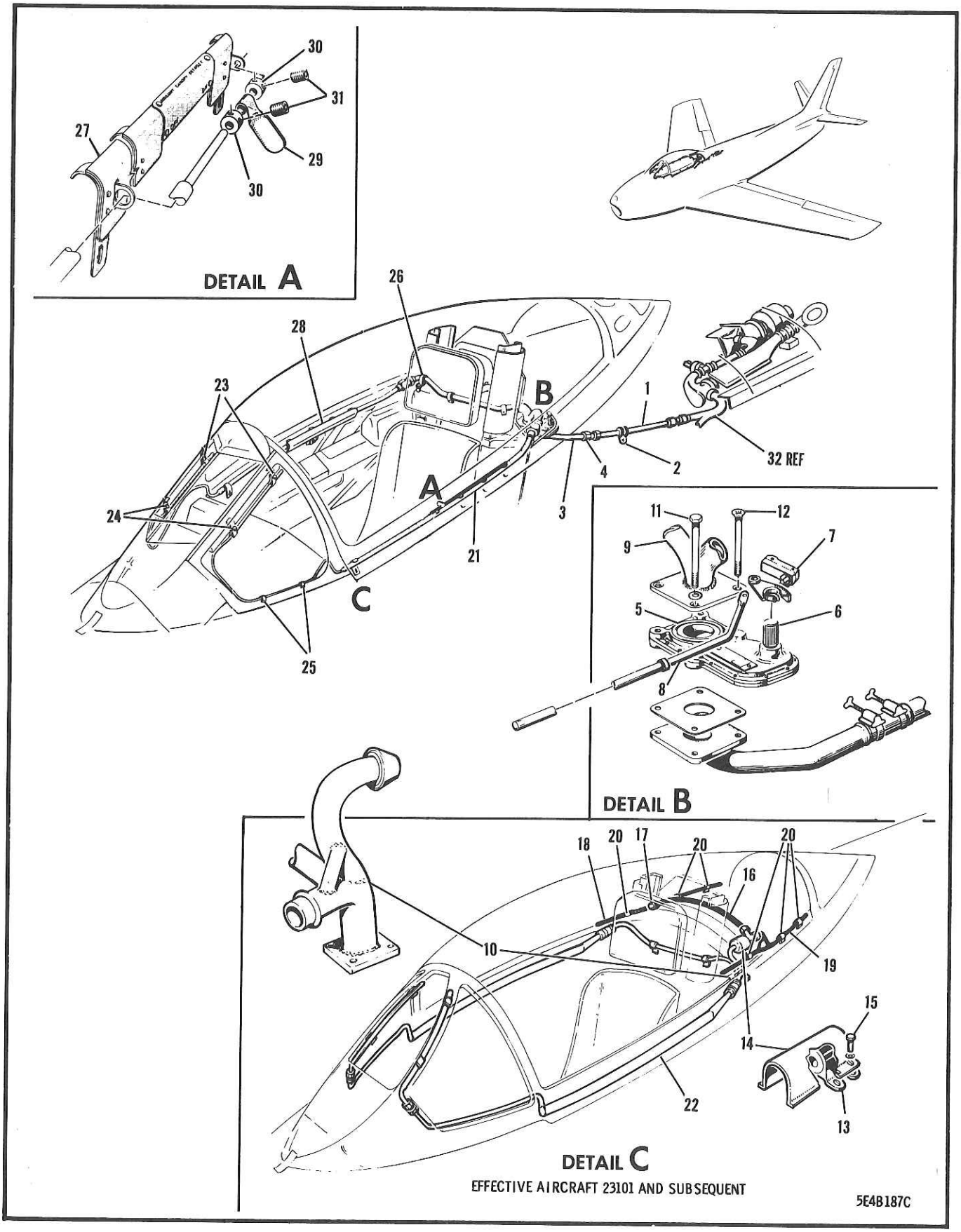

FIGURE 281 COCKPIT ENCLOSURE DEFROSTING SYSTEM

FIGURE AND INDEX NUMBER	GROUP / MAJOR ASSEMBLY / PART NUMBER	1234567 NOMENCLATURE	CODE	UNITS PER ASSY
	GROUP	ANTI-ICING & DE-ICING SYSTEM		
	MAJOR ASSEMBLY	COCKPIT ENCLOSURE DEFROSTING SYSTEM		
281 -	172-53307	HEAT & VENT SYSTEM EQUIP. INSTL - COCKPIT ENCLOSURE DEFROST (SEE SECTION 3)	001-100	NP
	172-53307-51	HEAT & VENT SYSTEM EQUIP. INSTL - COCKPIT ENCLOSURE DEFROST	101-	NP
- 1	172-53311-951	.LINE ASSY - HIGH PRESSURE DEFROST DUCT	001-100	1
	172-53311-953	.LINE ASSY - HIGH PRESSURE DEFROST DUCT	101-	1
		OR		
	172-53311-961	.LINE ASSY - HIGH PRESSURE DEFROST DUCT		
	172-53424-5	.CONNECTOR - HEAT & VENT AIR DUCT		1
	AN737TW82	.CLAMP -		2
- 2	AN742D18C	.CLAMP -		1
	AN520-10R8	.SCREW -		1
	AN960D10	.WASHER -		1
	AN365-1032	.NUT -		1
- 3	170-53334	.TUBE ASSY - H/VENT SYS COCKPIT ENCL D/FR	001-100	1
	170-53334-950	.TUBE ASSY - H/VENT SYS COCKPIT ENCL D/FR	101-	1
	140-53316-21	.HOSE - HEAT & VENT SYSTEM CONNECTING (MAKE FROM K7139 (DOM))		1
- 4	172-53424-5	.CONNECTOR - HEAT & VENT AIR DUCT		1
	AN737TW46	.CLAMP -		2
	151-53657	.GASKET - H/VENT COCKPIT ENCLOSURE D/FR		1
- 5	WM346-1D	.VALVE - SLIDE SHUT-OFF (WTR)		1
- 6	172-53422	.LEVER ASSY - HEAT & VENT SYSTEM COCKPIT ENCLOSURE DEFROST VALVE		1
	AN515-8R6	..SCREW -		1
	AN935-8L	..WASHER -		1
- 7	BZ-7RQ1T	.SWITCH - SPDT PLUNGER (MSC)		1
	13B-53021	.BRACKET - MICROSWITCH PROTECTOR	611-	1
	AN515-8R8	.SCREW - (BRACKET ATTACHING)	611-	2
	AN960-8	.WASHER -	611-	2
	AN365-832	.NUT -	611-	2
- 8	172-53423	.ROD ASSY - H/VENT SYSTEM COCKPIT ENCLOSURE DEFROST VALVE CONTROL		1
	2W1-13-14-32	.WASHER - PLAIN (NAA)		1
	AN380-2-2	.COTTER-PIN -		1
- 9	172-53417	.MANIFOLD ASSY - H/VENT SYSTEM COCKPIT ENCLOSURE DEFROST	001-100	1
-10	191-53417	.MANIFOLD ASSY - H/VENT SYSTEM COCKPIT ENCLOSURE DEFROST	101-	1
-11	AN4-17A	.BOLT - (MANIFOLD TO TUBE ATTACHING)		3
-12	AN509-416R30	.SCREW -		1
	AN960-416	.WASHER -		3
-13	191-53332	.HOUSING - H/VENT SYSTEM CANOPY DEFROST MAKE & BREAK CONNECTOR SEAL	101-	1
	191-53333	.SEAL - H/VENT SYSTEM CANOPY DEFROST MAKE & BREAK CONNECTOR	101-	1
-14	13B-74018	.GUARD - H/VENT SYSTEM CANOPY DEFROST MAKE & BREAK CONNECTOR SEAL (AS PER EO 05-5E-6A/171)	720-	1
-15	AN3-7A	.BOLT - (EFFECTIVE 23001-23719 AS PER EO 05-5E-6A/171)	720-	4
	2W17-10L	.WASHER - PLAIN (NAA)	101-	4
	AN826-10D	.TEE -	101-	1
-16	191-53355-55	.LINE ASSY - REAR CANOPY DEFROST CROSS-OVER DUCT	101-	1
-17	AN815-10D	.UNION -	101-	1
-18	191-53334	.DUCT ASSY - H/VENT SYSTEM CANOPY DEFROST (STARBOARD SIDE)	101-	1
-19	191-53335	.DUCT ASSY - H/VENT SYSTEM CANOPY DEFROST (PORT SIDE)	101-	1

FIGURE AND INDEX NUMBER	GROUP ANTI-ICING & DE-ICING SYSTEM MAJOR ASSEMBLY COCKPIT ENCLOSURE DEFROSTING SYSTEM PART NUMBER	1234567 NOMENCLATURE	CODE	UNITS PER ASSY
281 -20	AN742-8	•CLAMP -	101-	6
	AN520-10-7	•SCREW -	101-	4
	AN520-10-14	•SCREW -	101-	1
	4S3D10-5	•SPACER - BOLT (NAA)	101-	1
	2W17-10L	•WASHER - PLAIN (NAA)	101-	5
	AN364-1032	•NUT -	101-	4
-21	172-53451-3	•MANIFOLD ASSY - H/VENT SYSTEM COCKPIT ENCLOSURE DEFROST (PORT SIDE)	001-100	1
	172-53451-51	••TUBE ASSY - HEAT & VENT SYSTEM COCKPIT ENCLOSURE DEFROST (PORT SIDE)	001-100	1
	172-53451-61	••TUBE ASSY - HEAT & VENT SYSTEM COCKPIT ENCLOSURE DEFROST (PORT SIDE)	001-100	1
-22	191-53451-1	•DUCT ASSY - HEAT & VENT SYSTEM WINDSHIELD & CANOPY DEFROST (PORT SIDE)	101-	1
	172-53451-5	•MANIFOLD ASSY - H/VENT SYSTEM COCKPIT ENCLOSURE DEFROST (STARBOARD SIDE)	001-100	1
	172-53451-53	••TUBE ASSY - HEAT & VENT SYSTEM COCKPIT ENCLOSURE DEFROST (STARBOARD SIDE)	001-100	1
	172-53451-63	••TUBE ASSY - HEAT & VENT SYSTEM COCKPIT ENCLOSURE DEFROST (STARBOARD SIDE)	001-100	1
	172-53420	••NAME-PLATE - HEAT & VENT SYSTEM COCKPIT STARBOARD SIDE OUTLET	001-100	1
	191-53451-2	•DUCT ASSY - HEAT & VENT SYSTEM WINDSHIELD & CANOPY DEFROST (STARBOARD SIDE)	101-	1
	172-53420	••NAME-PLATE - HEAT & VENT SYSTEM COCKPIT STARBOARD SIDE OUTLET	101-	1
	172-53424-5	•CONNECTOR - HEAT & VENT AIR DUCT		2
	AN737TW46	•CLAMP -		4
-23	172-53437	•BRACKET ASSY - H/VENT SYSTEM ARMOUR GLASS DEFROST DUCT SUPPORT UPPER		2
-24	172-53436	•BRACKET ASSY - H/VENT SYSTEM ARMOUR GLASS DEFROST DUCT SUPPORT LOWER		2
	AN742-D10	•CLAMP -		4
	AN509Z10R12	•SCREW -		4
-25	AN742D10	•CLAMP -		4
-26	AN742D16	•CLAMP -		1
	NAS43DD-3-16	•SPACER -		1
	AN515-8R14	•SCREW -		1
	AN365-832	•NUT -		1
-27	172-53415	•SHIELD ASSY - HEAT & VENT SYSTEM DEFROST LINE PORT SIDE		1
	172-53415-3	••SHIELD - H/VENT SYS D/FR LINE PORT SIDE		1
	172-53415-5	••INSULATION - HEAT & VENT SYSTEM DEFROST LINE PORT SIDE		1
-28	172-53416	•SHIELD ASSY - HEAT & VENT SYSTEM DEFROST LINE STARBOARD SIDE		1
	172-53416-3	••SHIELD - H/VENT SYS D/FR LINE STBD SIDE		1
	172-53416-5	••INSULATION - HEAT & VENT SYSTEM DEFROST LINE STARBOARD SIDE		1
	AN520-10R8	•SCREW - (SHIELD ATTACHING)		6
	AN960D10	•WASHER -		6
	AN365-1032	•NUT -		6
-29	151-53663	•HANDLE - HEAT & VENT SYSTEM COCKPIT ENCLOSURE DEFROST DUCT		1
-30	151-53671	•COLLAR - HEAT & VENT SYSTEM COCKPIT ENCLOSURE DEFROST DUCT HANDLE STOP		2
-31	AN565A8H4	•SCREW - (COLLAR TO ROD ATTACHING)		2
-32	172-53407	DUCT - H/VENT SYSTEM CANOPY DEFROST & DE-ICING (SEE FIG. 279)		REF

-000-

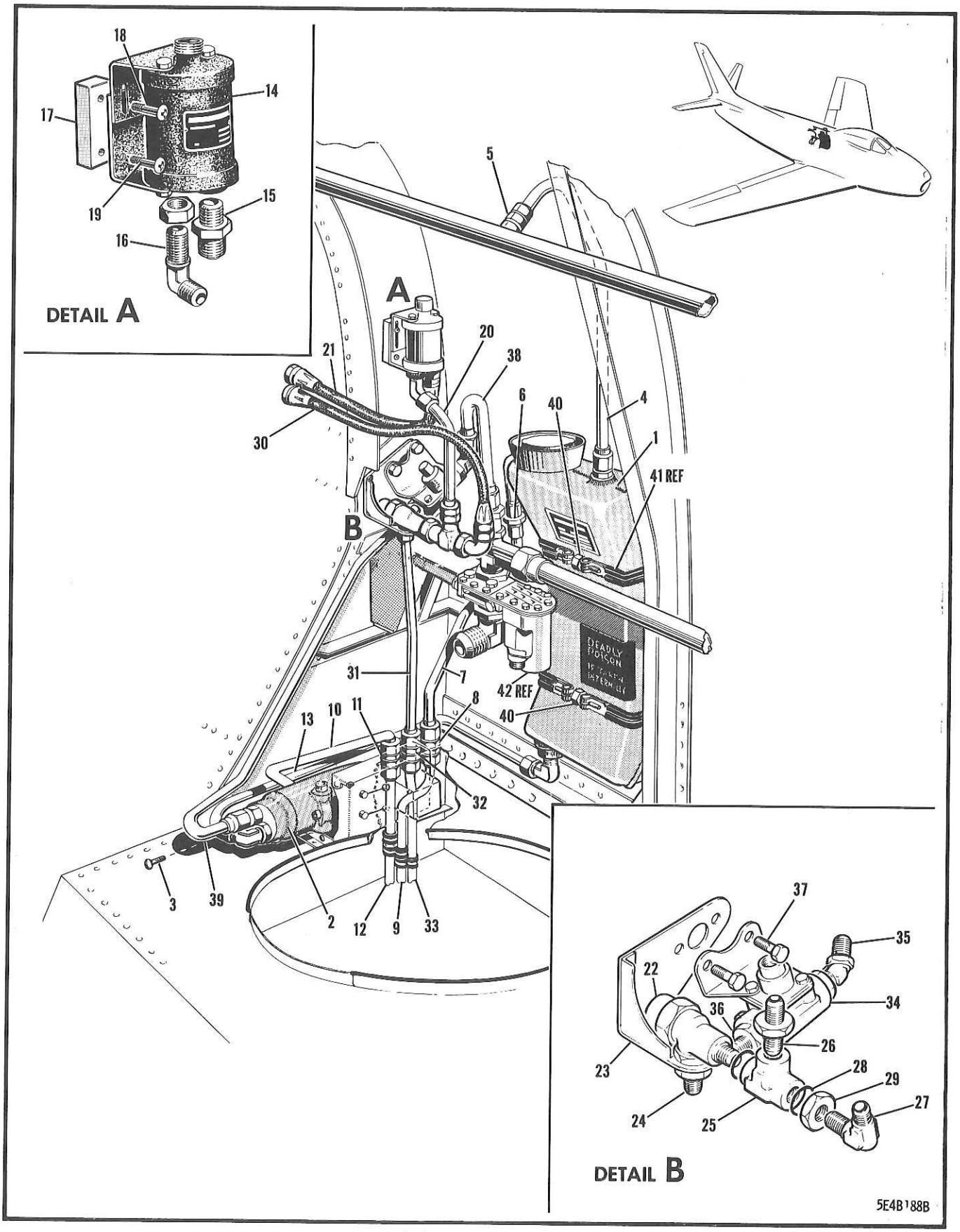

FIGURE 282 FUEL FILTER ALCOHOL DE-ICING SYSTEM
(EFFECTIVE AIRCRAFT 23001 TO 23210 INCL)

FIGURE AND INDEX NUMBER	GROUP ANTI-ICING & DE-ICING SYSTEM MAJOR ASSEMBLY FUEL FILTER ALCOHOL DE-ICING SYSTEM PART NUMBER	1234567 NOMENCLATURE	CODE	UNITS PER ASSY
282 -	13A-64021	DE-ICING SYSTEM INSTL - FUEL FILTER ALCOHOL (SEE SECTION 12)	001-210	NP
- 1	151-48156-101	•TANK ASSY - FUEL FILTER ALCOHOL DE-ICING (SEE FIG. 283)		REF
- 2	13A-64062	•PUMP ASSY - FUEL FILTER ALCOHOL DE-ICING (SEE FIG. 284)		REF
- 3	AN520-10R7	•SCREW -	001-210	1
	AN520-10R6	•SCREW -	001-210	2
- 4	13A-64023-2	•LINE ASSY - DE-ICING TANK TO VENT DUCT	001-210	1
- 5	AN832-6D	•UNION -	001-210	1
	AN902B6	•GASKET -	001-210	1
	AN924-6D	•NUT -	001-210	1
- 6	AN919-6D	•REDUCER -	001-210	1
- 7	13A-64023-12	•LINE ASSY - TANK SCUP CUP DRAIN TO FLOOR	001-210	1
- 8	AN832-4D	•UNION -	001-210	1
	AN960D716	•WASHER -	001-210	1
	AN924-4D	•NUT -	001-210	1
- 9	13A-64023-22	•LINE ASSY - TANK SCUPPER CUP DRAIN (FLOOR UNION TO OUTLET)	001-210	1
	AN742D6C	•CLAMP -	001-210	2
	AN515-8R7	•SCREW -	001-210	1
	AN365-832	•NUT -	001-210	1
-10	13A-64023-8	•LINE ASSY - PUMP SEAL DRAIN TO FLOOR UNION	001-210	1
	AN806D4	•PLUG -	111-210	1
		OR		
	AN929-4	•PLUG - (WITH AN815-4D UNION)	111-210	
-11	AN832-4D	•UNION -	001-210	1
	AN960D716	•WASHER -	001-210	1
	AN924-4D	•NUT -	001-210	1
-12	13A-64023-20	•LINE ASSY - PUMP SEAL DRAIN FLOOR UNION TO OUTLET	001-210	1
	758-4	•CLIP - INTEGRALLY BONDED SINGLE-HOLE LUG TYPE SUPPORT (ADE)	001-210	1
	AN515-8R6	•SCREW -	001-210	2
	AN365-832	•NUT -	001-210	2
-13	13A-64023-14	•LINE ASSY - DE-ICING TANK TO PUMP	001-210	1
	AN806D6	•PLUG -	111-210	1
		OR		
	AN929-6S	•PLUG - (WITH AN815-6D UNION)	111-210	
	13A-64024	•SWITCH ASSY - FUEL FILTER ALCOHOL DE-ICING	001-210	1
-14	G20C26	••SWITCH - (MHR)(FUEL FILTER ALCOHOL D/ICE)	001-210	1
	AN902B4	••GASKET -	001-210	1
-15	AN919-3D	••REDUCER -	001-210	1
-16	AN837-4D	••ELBOW -	001-210	1
	AN924-4D	••NUT -	001-210	1
	AN902B4	••GASKET -	001-210	1
-17	13A-64021-3	•DISTANCE BLOCK - FUEL DE-ICING SWITCH	001-210	2
-18	AN515-8R27	•SCREW -	001-210	3
-19	AN515-8R26	•SCREW -		1
	AN520-10R8	•SCREW - (BONDING JUMPER ATTACHING)	001-210	1
	AN365-1032	•NUT -		1
-20	13A-64023-10	•LINE ASSY - PRESSURE DIFF SWITCH TO RV TEE	001-210	1
-21	MS28741-5-15	•HOSE ASSY - DETACHABLE END FITTING M/P	001-210	1
	13A-64026	•VALVE ASSY - FUEL FILTER ALCOHOL D/ICE SYS	001-210	1
-22	2-2850-76	••VALVE - (PAC) (FUEL FLT ALCOHOL DE-ICING)	001-210	1
	AF934-7	••PACKING - O-RING GASOLINE OR KEROSENE	001-210	1
	AN924-4D	••NUT -		1
-23	13A-64029	••BRACKET ASSY - FUEL FILTER ALC D/ICE SYS	001-210	1
-24	13A-64027	••RESTRICTOR - FUEL FILTER ALCOHOL DE-ICING SYSTEM PRESSURE SWITCH LINE	001-210	1

FIGURE AND INDEX NUMBER	GROUP ANTI-ICING & DE-ICING SYSTEM MAJOR ASSEMBLY FUEL FILTER ALCOHOL DE-ICING SYSTEM PART NUMBER	1234567 NOMENCLATURE	CODE	UNITS PER ASSY
282 -	AF934-7	••PACKING - O-RING GASOLINE OR KEROSENE	001-210	1
	AN924-4D	••NUT -		1
-25	AN926-4D	••TEE -	001-210	1
-26	AN815-4D	••UNION -	001-210	1
	AF934-7	••PACKING - O-RING GASOLINE OR KEROSENE	001-210	1
-27	AN833-4D	••ELBOW -	001-210	1
-28	AF934-7	••PACKING - O-RING GASOLINE OR KEROSENE	001-210	1
-29	AN924-4D	••NUT -	001-210	1
-30	MS28741-4-0144	•HOSE ASSY - DETACHABLE END FITTING M/P	001-210	1
-31	13A-64023-4	•LINE ASSY - RELIEF-VALVE DRAIN TO BULKHEAD UNION ON FLOOR	001-210	1
-32	AN832-4D	•UNION -	001-210	1
	AN960D716	•WASHER -	001-210	1
	AN924-4D	•NUT -	001-210	1
-33	13A-64023-18	•LINE ASSY - SCUPPER CUP DRAIN FLOOR UNION TO OUTLET	001-210	1
	AN742D6C	•CLAMP -	001-210	2
	AN515-8R7	•SCREW -	001-210	1
	AN365-832	•NUT -	001-210	1
	13A-64025	•VALVE ASSY - FUEL FILTER DE-ICING SHUT-OFF	001-210	1
-34	40R-855D	••VALVE - AIR SHUT-OFF (GCO)	001-210	1
-35	AN837-8D	••ELBOW -	001-210	1
	AN902B8	••GASKET -	001-210	1
	AN924-8D	••NUT -	001-210	1
-36	AN919-10D	••REDUCER -	001-210	1
	AN902B8	••GASKET -	001-210	1
-37	AN520-10R8	•SCREW -	001-210	2
-38	13A-64023-16	•LINE ASSY - SHUT-OFF VALVE TO FILTER CV	001-210	1
	AN742-8	•CLAMP -	001-210	1
	AN742-6	•CLAMP -	001-210	1
	AN520-10R7	•SCREW -	001-210	1
	AN365-1032	•NUT -	001-210	1
-39	13A-64023-6	•LINE ASSY - PUMP TO SHUT-OFF VALVE	001-210	1
	AN806D4	•PLUG -	111-210	1
		OR		
	AN929-4	•PLUG - (WITH AN815-4D UNION)	111-210	
-40	NAS27-3-20	•TURNBUCKLE -	001-210	2
-41	151-48158-1	STRAP ASSY - FUEL FILTER ALCOHOL DE-ICING TANK SUPPORT (SEE SECTION 3)		REF
-42	13A-64085	VALVE INSTL - FUEL SHUT-OFF (SEE SECT. 12)		REF
		-000-		

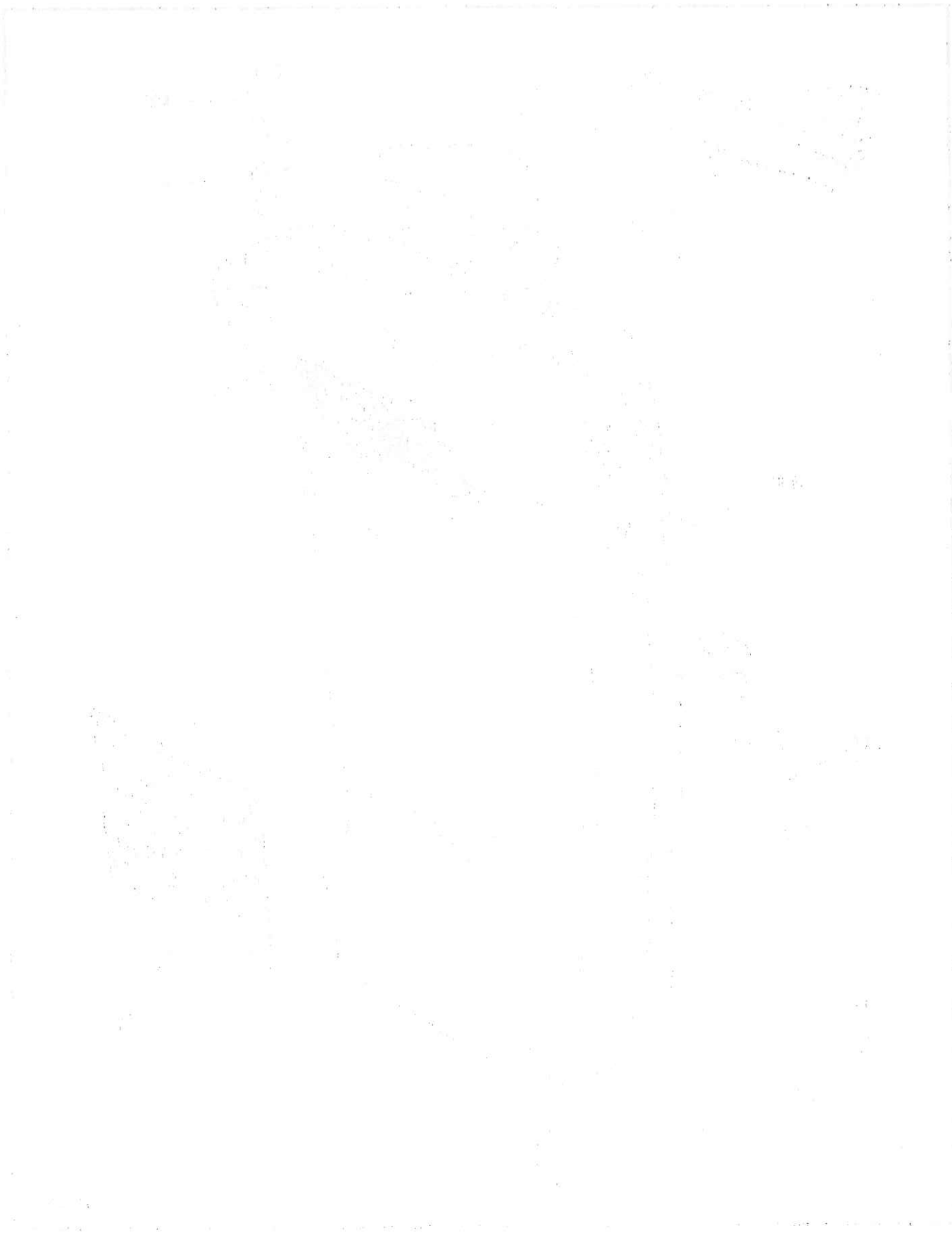

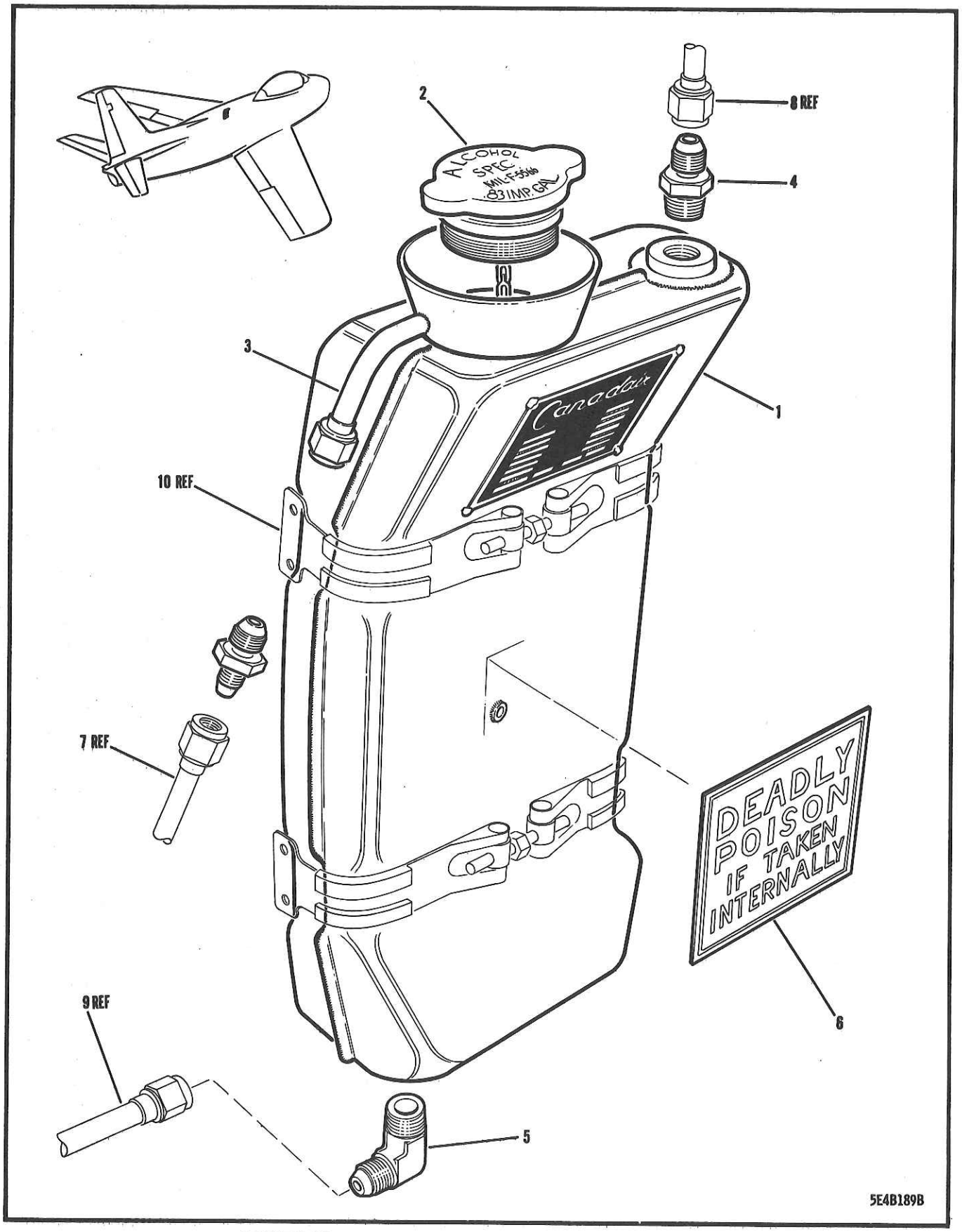

FIGURE 283 FUEL FILTER ALCOHOL DE-ICING TANK
(EFFECTIVE AIRCRAFT 23001 TO 23210 INCL)

FIGURE AND INDEX NUMBER	GROUP ANTI-ICING & DE-ICING SYSTEM MAJOR ASSEMBLY FUEL FILTER ALCOHOL DE-ICING TANK		CODE	UNITS PER ASSY
	PART NUMBER	1234567 NOMENCLATURE		
283 -	151-48156-101	TANK ASSY - FUEL FILTER ALCOHOL DE-ICING (SEE FIG. 282)	001-210	1
- 1	151-48156-51	•TANK - FUEL FILTER ALCOHOL DE-ICING •83 IMP.(1.0 U.S.) GALLON	001-210	1
- 2	151-48157	•CAP ASSY - FUEL FILTER ALCOHOL D/ICE TANK	001-210	1
- 3	151-48156-7	•TUBE - FUEL FILTER ALCOHOL DE-ICING TANK	001-210	1
- 4	AN816-6-6B	•NIPPLE -	001-210	1
- 5	AN822-6-6B	•ELBOW -	001-210	1
- 6	146-42617	•DECALCOMANIA - WATER INJ SOLUTION WARNING	001-100	1
	165-48853	•DECALCOMANIA - FUEL FLT D/ICE ALC WARNING	101-210	1
- 7	13A-64023-12	LINE ASSY - TANK SCUPPER (SEE FIG. 282)		REF
- 8	13A-64023-2	LINE ASSY - TANK TO VENT DUCT(SEE FIG. 282)		REF
- 9	13A-64023-14	LINE ASSY - TANK TO PUMP (SEE FIG. 282)		REF
-10	151-48158-1	STRAP ASSY - FUEL FILTER ALCOHOL DE-ICING TANK SUPPORTING LH (SEE SECTION 3)		REF

-000-

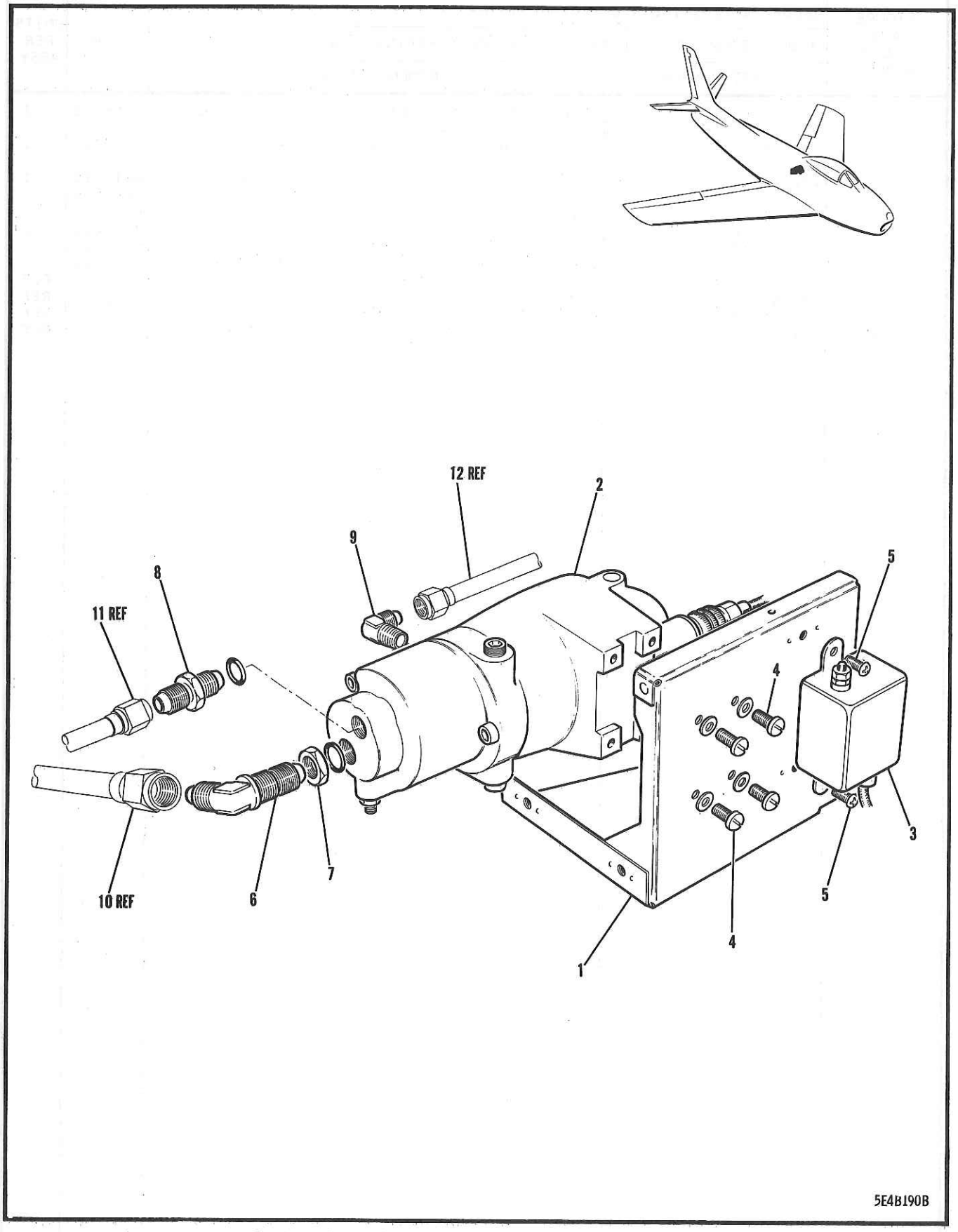

FIGURE 284 FUEL FILTER ALCOHOL DE-ICING PUMP
(EFFECTIVE AIRCRAFT 23001 TO 23210 INCL)

FIGURE AND INDEX NUMBER	GROUP ANTI-ICING & DE-ICING SYSTEM MAJOR ASSEMBLY FUEL FILTER ALCOHOL DE-ICING PUMP		CODE	UNITS PER ASSY
	PART NUMBER	1234567 NOMENCLATURE		
284 -	13A-64062	PUMP ASSY - FUEL FILTER ALCOHOL DE-ICING (SEE FIG. 282)	001-210	1
- 1	13A-64063	•BRACKET ASSY - FUEL FILTER ALC D/ICE PUMP	001-210	1
- 2	20386-9	•PUMP ASSY - (ADE) (HEATER)	001-210	1
- 3	B110L	••FILTER ASSY - (POT) (RADIO NOISE) (FURNISHED WITH 20386-9 PUMP (ADE))	001-210	1
- 4	AN503-416-6	•SCREW - (PUMP TO BRACKET ATTACHING)	001-210	4
	AN960-416L	•WASHER -	001-210	4
- 5	AN515-8-8	•SCREW - (FILTER TO BRACKET ATTACHING)	001-210	2
- 6	AN833-6D	•ELBOW -	001-210	1
- 7	AN924-6D	•NUT -	001-210	1
	MS29512-6	•GASKET - STRAIGHT THREAD TUBE FITTING FUEL RESISTANT BOSS	001-210	1
- 8	AN815-4D	•UNION -	001-210	1
	MS29512-4	•GASKET - STRAIGHT THREAD TUBE FITTING FUEL RESISTANT BOSS	001-210	1
- 9	AN822-4B	•ELBOW -	001-210	1
-10	13A-64023-14	LINE ASSY - TANK TO PUMP (SEE FIG. 282)		REF
-11	13A-64023-6	LINE ASSY - PUMP TO SHUT-OFF VALVE (SEE FIG. 282)		REF
-12	13A-64023-8	LINE ASSY - PUMP SEAL DRAIN TO FLOOR UNION (SEE FIG. 282)		REF

-000-

SECTION 16
ANTI-G SYSTEM

TABLE OF CONTENTS

FIGURE	TITLE	PAGE
285	PILOT ANTI-G SYSTEM	1172
286	PILOT QUICK DISCONNECT	1174

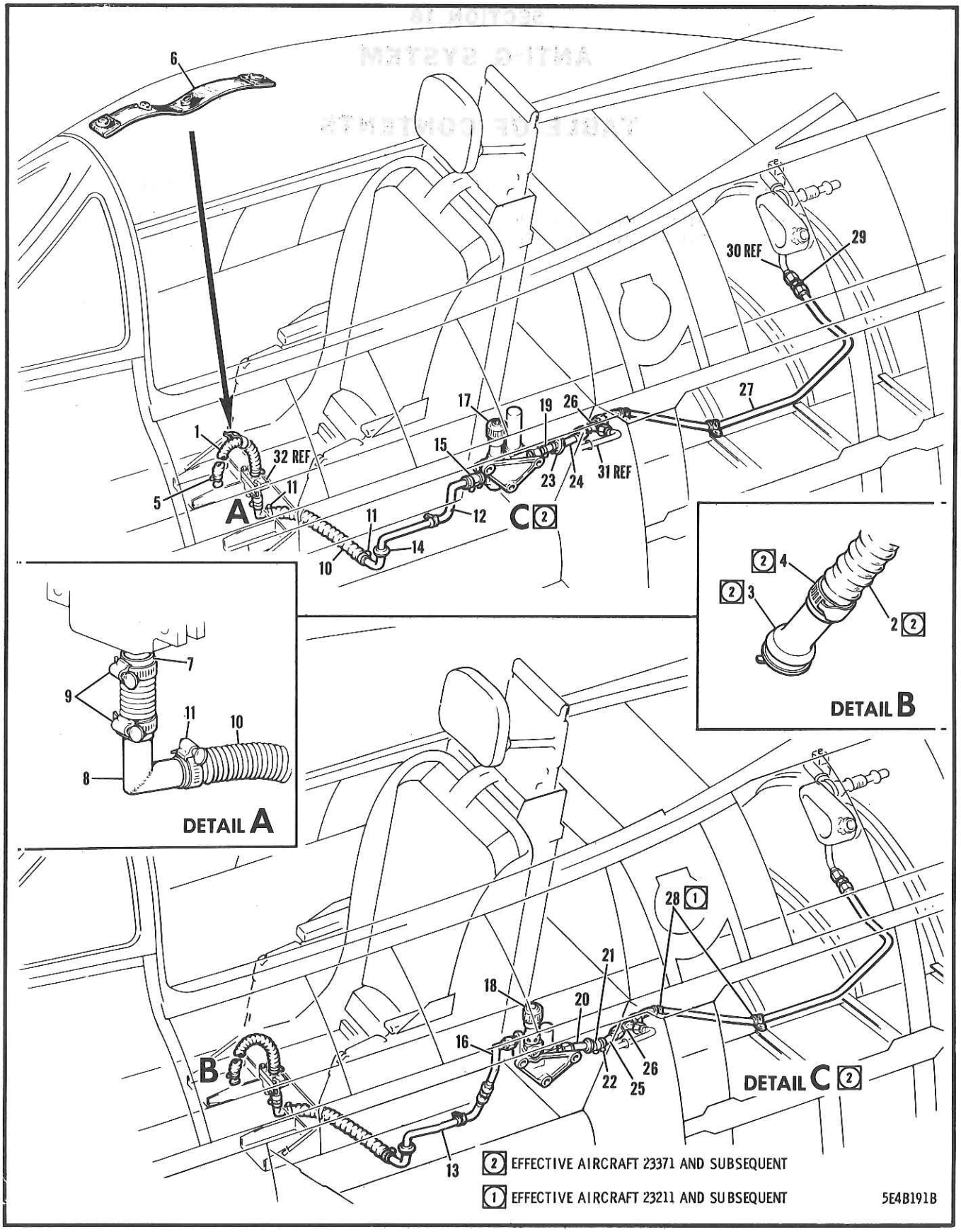

FIGURE 285 PILOT ANTI-G SYSTEM

FIGURE AND INDEX NUMBER	GROUP ANTI-G SYSTEM MAJOR ASSEMBLY PILOT ANTI-G SYSTEM PART NUMBER	1234567 NOMENCLATURE	CODE	UNITS PER ASSY
285 -	13A-51031	INSTRUMENT EQUIP. INSTL - FORWARD FUSELAGE (SEE SECTION 8)		REF
- 1	170-51174-5	•DISCONNECT ASSY - PILOT PNEU ANTI-G SUIT (MAKE FROM 46B12487 (G.F.E.))	001-370	1
	202-51174	•DISCONNECT ASSY - PILOT PNEU ANTI-G SUIT	371-	1
- 2	DC-151	••HOSE - ANTI-G SUIT EJECTION (CLA)	371-	1
- 3	AN6532-1A	••CONNECTOR ASSY -	371-	1
- 4	99963	••CLAMP - (MKM) (HOSE)	371-530	1
	A3122-16-59	••CLAMP - SPEED HOSE (TIN)	531-	1
- 5	AN737-34	•CLAMP - HOSE (TO PILOT ANTI-G SUIT)		1
- 6	151-51091	•STRAP ASSY - ANTI-G SUIT DISC. STOWAGE		1
- 7	170-51031-954	•HOSE - ANTI-G SUIT	001-711	1
	170-51031-956	•HOSE - ANTI-G SUIT	712-	1
- 8	13-86019	•ELBOW ASSY - PILOT PNEUMATIC ANTI-G SUIT	001-711	1
	13-68019-6	•ELBOW ASSY - PILOT PNEUMATIC ANTI-G SUIT	712-	1
- 9	AN737-34	•CLAMP -		2
-10	170-51174-3	•HOSE ASSY - PNEUMATIC ANTI-G SUIT	001-370	1
	202-51175	•HOSE ASSY - PNEUMATIC ANTI-G SUIT	371-	1
	52B3687-3	••HOSE - ANTI-G SUIT (CLA)	371-	1
-11	AN737-34	•CLAMP -		2
-12	161-51801-69	•LINE ASSY - M4 VALVE TO DISCONNECT	001-200	1
	161-51801-959	•LINE ASSY - M4 VALVE TO DISCONNECT	201-370	1
-13	161-51801-957	•LINE ASSY - FROM UNION TO DISCONNECT	371-	1
-14	AN931A10-14	•GROMMET -		1
-15	3H2-10-15	•HOSE - (NAA)	001-370	1
	AN737-34	•CLAMP -	001-370	2
-16	13B-51003	•ELBOW ASSY - TYPE M8 VALVE TO DISCONNECT	371-	1
	AN815-10D	•UNION -	371-	1
-17	SPEC 41087	•VALVE - ANTI-G SUIT TYPE M4 (G.F.E.)	001-370	1
-18	MIL-V-9370	•VALVE - ANTI-G SUIT TYPE M8 (ARO)	371-	1
	MS24350-3	•SPARE PART FOR MIL-V-9370	371-	
	30-71016-2	•DUST-CAP - ANTI-G REGULATING VALVE (AS PER EO 05-5E-6A/215)		1
	AN365-428	•NUT -	001-370	3
	AN364-428	•NUT -	371-	3
-19	3H2-10-14	•HOSE - (NAA)	001-370	1
	AN737-34	•CLAMP -	001-370	2
-20	170-51801-985	•LINE ASSY - FROM CONNECTOR TO M8 VALVE	371-	1
-21	3H2-10-12	•HOSE - (NAA)	371-	1
-22	AN737-34	•CLAMP -	371-	2
-23	AN931-10-14	•GROMMET -		1
-24	170-51801-23	•LINE ASSY - AIR COMPRESSOR TO M4 VALVE	001-370	1
-25	170-51801-981	•LINE ASSY - AIR COMPRESSOR TO CONNECTOR	371-	1
-26	AN824-10D	•TEE -		1
-27	170-51801-977	•LINE ASSY - AIR COMPRESSOR TO TEE	001-210	1
	170-51801-979	•LINE ASSY - AIR COMPRESSOR TO M8 VALVE	211-	1
-28	AN742D12C	•CLAMP -	211-	2
	NAS43DD-3-16	•SPACER -	211-	1
	AN520-10R12	•SCREW -	211-	1
	AN520-10R8	•SCREW -	211-	1
	AN365-1032	•NUT -	211-	1
-29	AN815-10D	•UNION -		1
-30	172-53363-10	OUTLET ASSY - PRIMARY HEAT EXCHANGER HIGH PRESSURE (SEE SECTION 14)		REF
-31	170-48854-960	LINE ASSY - DROP FUEL TANK PRESSURE SUPPLY TO PRESS. REGULATOR (SEE SECTION 12)		REF
-32	165-53101	FITTING ASSY - PILOT PERSONAL LEAD UPPER (SEE SECTION 16)		REF

-000-

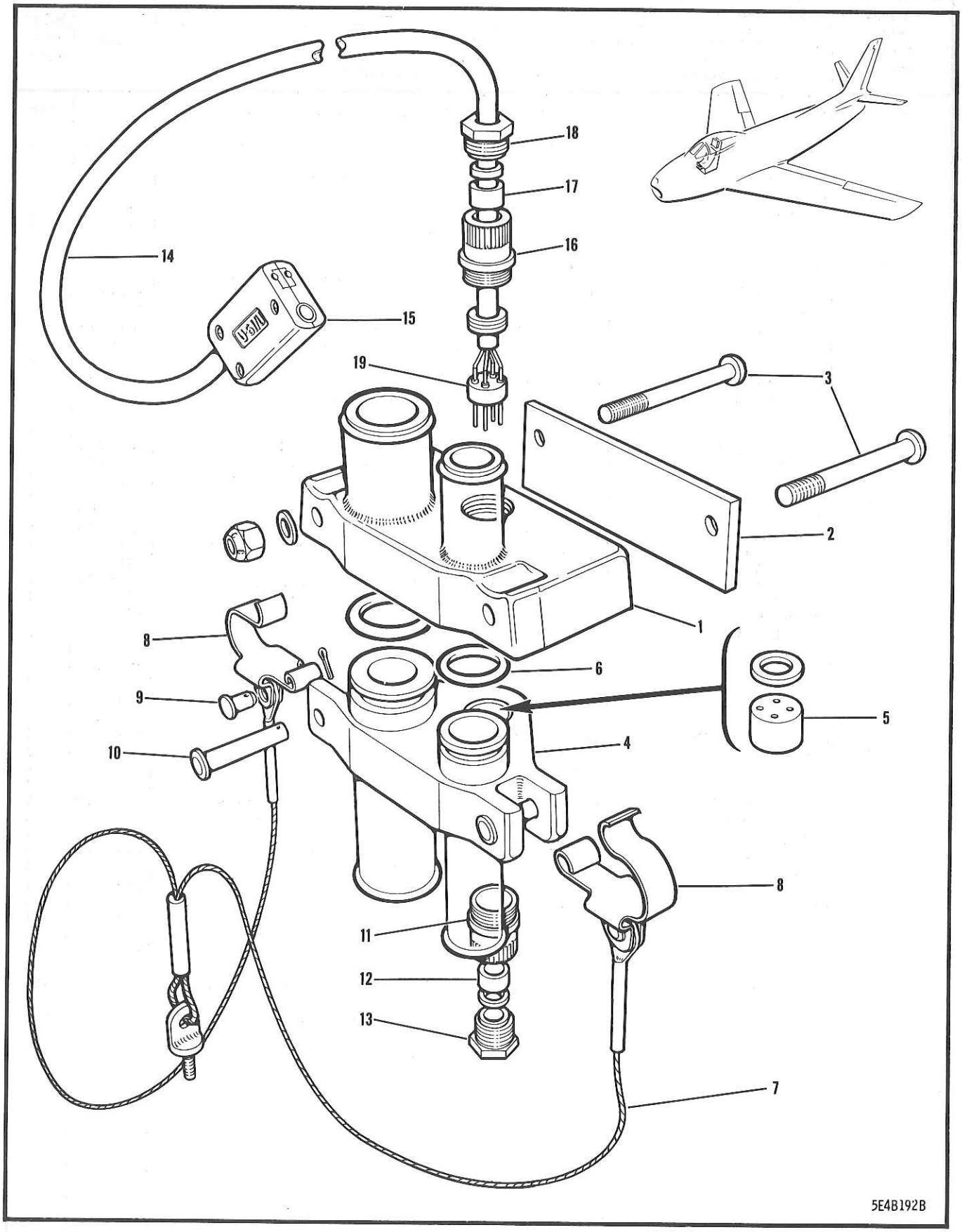

FIGURE 286 PILOT QUICK DISCONNECT

FIGURE AND INDEX NUMBER	GROUP / MAJOR ASSEMBLY / PART NUMBER	ANTI-G SYSTEM / PILOT QUICK DISCONNECT / 1234567 NOMENCLATURE	CODE	UNITS PER ASSY
286 -	170-53001-50	FURNISHINGS INSTL - COMPLETE(SEE SECTION 6)		REF
- 1	165-53101-800	•FITTING ASSY - PILOT PERSONAL LEAD QUICK DISC• UPPER (AS PER EO 05-5E-6A/147)		1
	AN515-2R4	•SCREW -		1
	AN565D4H6	•SCREW -		1
	AN935-2L	•WASHER -		1
- 2	170-53012	•SHIM - PILOT PERSONAL LEAD QUICK DISC•		1
- 3	NAS221-31	•SCREW -		2
	AN960-10L	•WASHER -		2
	AN365-1032	•NUT -		2
- 4	165-53102-800	•FITTING ASSY - PILOT PERSONAL LEAD QUICK DISC• LOWER (AS PER EO 05-5E-6A/147)		1
- 5	X-4	•INSERT ASSY - (CED) (AS PER EO 05-5E-6A/147)		1
	AN515-2R4	•SCREW -		1
	AN935-2L	•WASHER -		1
- 6	AN6227B11	•PACKING -		1
	AN6227B13	•PACKING -		1
- 7	165-53112	•CABLE ASSY - PILOT EJECTION SEAT PERSONAL LEAD DISCONNECT		1
- 8	165-53103	••SPRING - PILOT PERSONAL LEAD QUICK DISCONNECT LOCK CLIP		2
- 9	AN393-7	••PIN -		2
	AN380-2-1	••COTTER-PIN -		2
-10	AN393-27	•PIN -		2
	AN380-2-2	•COTTER-PIN -		2
	165-71070-802	•BUSHING ASSY - RADIO CABLE PLASTIC PROT (AS PER EO 05-5E-6A/147)		1
-11	165-71059-800	••BUSHING - RADIO CABLE PLASTIC PROTECTOR		1
-12	2W1R14-15-250	••WASHER - PLAIN (NAA)		1
	2W1ALP16-14-32	••WASHER - PLAIN (NAA)		1
-13	165-71069	••CAP - RADIO CABLE PLASTIC PROT BUSHING		1
	165-71060-800	•CORD ASSY - RADIO MICROPHONE & HEADSET (AS PER EO 05-5E-6A/147)		1
-14	165-71060-3	••CORD - RADIO MICROPHONE & HEADSET		1
-15	U-61/U	••JACK ASSY - HEADSET CORD (MIC)		1
	165-71070-800	••BUSHING ASSY - RADIO CABLE PLASTIC PROT (AS PER EO 05-5E-6A/147)		1
-16	165-71059-800	•••BUSHING - RADIO CABLE PLASTIC PROTECTOR		1
-17	2W1R18-15-250	•••WASHER - PLAIN (NAA)		1
	2W1ALP21-14-32	•••WASHER - PLAIN (NAA)		1
-18	165-71069	•••CAP - RADIO CABLE PROTECTOR BUSHING		1
	2W1P28-18-31	••WASHER - PLAIN (NAA)		1
-19	X-4	••INSERT ASSY - (CED) (AS PER EO 05-5E-6A/147)		1

-000-

SECTION 17
OXYGEN SYSTEM

TABLE OF CONTENTS

FIGURE	TITLE	PAGE
287	PILOT OXYGEN SYSTEM	1178

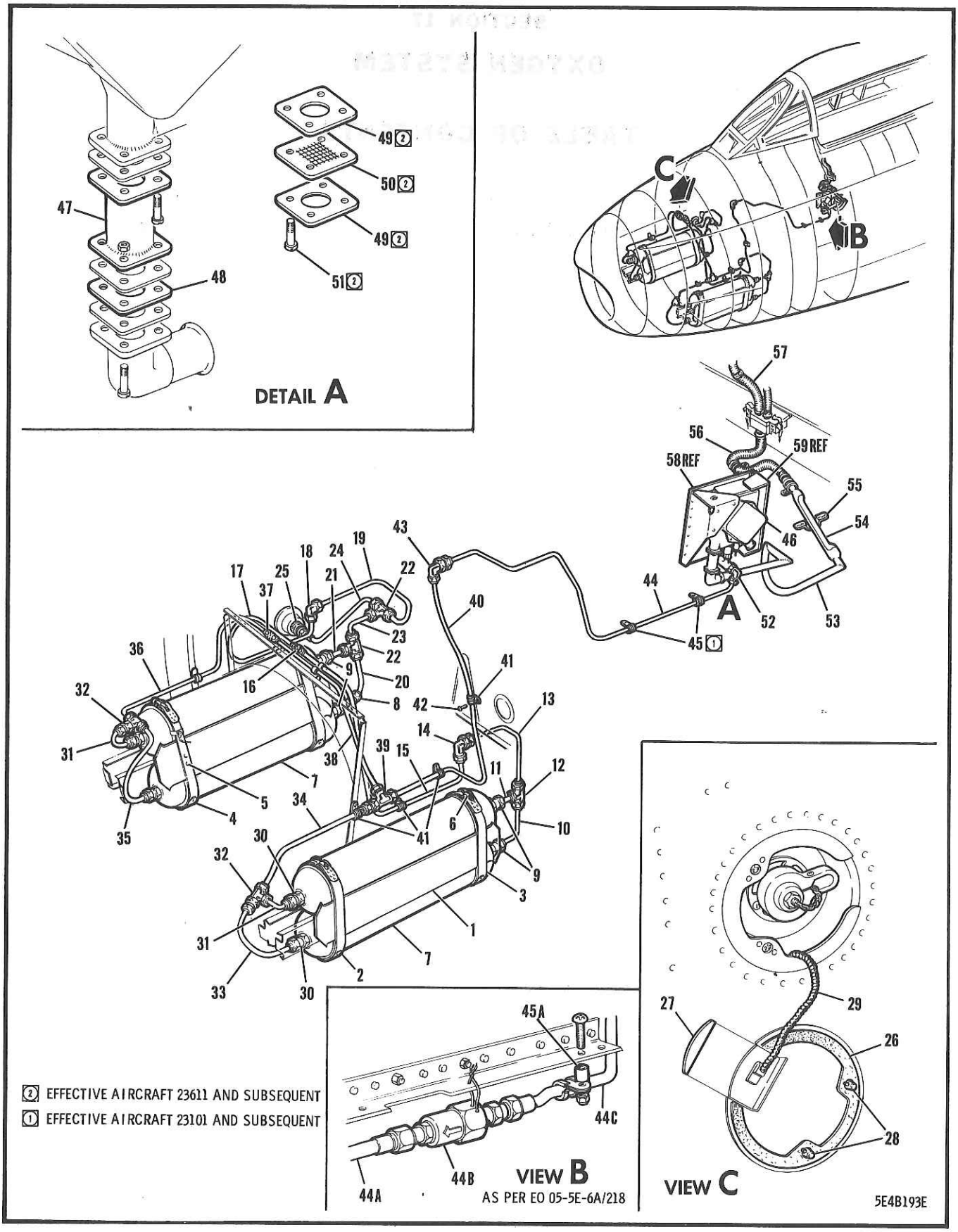

FIGURE 287 PILOT OXYGEN SYSTEM

FIGURE AND INDEX NUMBER	GROUP OXYGEN SYSTEM MAJOR ASSEMBLY PILOT OXYGEN SYSTEM PART NUMBER	1234567 NOMENCLATURE	CODE	UNITS PER ASSY
287 -	176-73301	OXYGEN SYSTEM EQUIP. INSTL - PILOT (SEE SECTION 3)		NP
	151-73331	.SUPPORT ASSY - OXYGEN BOTTLE		2
- 1	151-73332	..SUPPORT ASSY - OXYGEN BOTTLE		2
- 2	151-73329-952	..STRAP ASSY - OXYGEN BOTTLE LH	001-610	1
	151-73329-950	...CLIP - OXYGEN BOTTLE GROUNDING STRAP	001-610	2
	AN515-8R10	...SCREW -	001-610	2
- 3	151-73329-9	..STRAP ASSY - OXYGEN BOTTLE LH	001-610	1
	151-73329-9	..STRAP ASSY - OXYGEN BOTTLE LH	611-	2
- 4	151-73329-1	..STRAP ASSY - OXYGEN BOTTLE RH		2
	AN960A8	...WASHER -	001-610	2
	AN340-8	...NUT -	001-610	2
- 5	AN4-7A	..BOLT -		8
- 6	4S4-8-20	..SPACER - RIVET (NAA)		4
	AN960-416	..WASHER -		4
	AN365-428	..NUT -		4
	AN3-4A	..BOLT -	001-610	1
	AN935-8	..WASHER -	001-610	1
	AN340-8	..NUT -	001-610	1
	AN960-10	..WASHER -	001-610	1
	AN749-1-66	..JUMPER -	001-610	1
	AN935-10	..WASHER -	001-610	1
	AN340-10	..NUT -	001-610	1
	AN3-5A	.BOLT -		16
	AN960-3	.WASHER -		12
	AN365-1032	.NUT -		12
- 7	SPEC 94-40355	.CYLINDER - LOW PRESS. TYPE D2 OXY (G.F.E.)		4
- 8	AN915-2D	.ELBOW -		1
- 9	AN6036-1	.VALVE - LOW PRESSURE OXYGEN CHECK (STYLE G) (G.F.E.)		4
-10	151-73318-119	.LINE ASSY - CHECK VALVE TO TEE REAR END OF LOWER CYLINDER (PORT SIDE)		1
-11	151-73318-963	.LINE ASSY - CHECK VALVE TO TEE REAR END OF UPPER CYLINDER (PORT SIDE)		1
-12	AN824-5D	.TEE -		1
-13	151-73318-121	.LINE ASSY - BULKHEAD UNION TO TEE REAR END UPPER CYLINDER (PORT SIDE)		1
-14	AN837-5D	.ELBOW -		1
	AN960D816	.WASHER -		1
	AN924-5D	.NUT -		1
-15	151-73318-103	.LINE ASSY - BULKHEAD ELBOW TO UNION (PORT)		1
	AN931-5S12	.GROMMET -		1
-16	AN815-5D	.UNION -		1
-17	151-73318-105	.LINE ASSY - BULKHEAD ELBOW TO UNION (STBD)		1
-18	AN833-5D	.ELBOW -		1
	AN960D816	.WASHER -		2
	2W1V32-28-64	.WASHER - PLAIN (NAA)		1
	AN924-5D	.NUT -		1
-19	151-73318-101	.LINE ASSY - BULKHEAD ELBOW TO TEE REAR END UPPER CYLINDER (STARBOARD SIDE)		1
-20	151-73318-957	.LINE ASSY - CHECK VALVE TO TEE REAR END LOWER CYLINDER (STARBOARD SIDE)		1
-21	151-73318-959	.LINE ASSY - CHECK VALVE TO TEE REAR END OF UPPER CYLINDER (STARBOARD SIDE)		1
-22	AN824-5D	.TEE -		2
-23	151-73318-97	.LINE ASSY - TEE TO TEE CYL REAR END STBD		1
-24	151-73318-99	.LINE ASSY - FILLER VALVE TO TEE REAR OF UPPER CYLINDER (STARBOARD SIDE)		1
-25	AN6024-6	.VALVE - LOW PRESSURE OXYGEN FILLER		1
	AN507-10R8	.SCREW -		4

FIGURE AND INDEX NUMBER	GROUP OXYGEN SYSTEM MAJOR ASSEMBLY PILOT OXYGEN SYSTEM PART NUMBER	1234567 NOMENCLATURE	CODE	UNITS PER ASSY
287 -	AN960D10	•WASHER -		4
	AN365-1032	•NUT -		4
	172-73327	•DOOR ASSY - OXYGEN FILLER VALVE(STBD SIDE)		1
-26	172-73328	••SEAL - OXYGEN FILLER VALVE DOOR		1
-27	172-73329	••SEAL - OXYGEN FILLER VALVE DOOR RETAINING STRIP		1
-28	99834-2-180	••STUD - FLUSH HEAD AIRLOC FASTENER (MKM)		2
	99836	••CROSS-PIN - AIRLOC FASTENER (MKM)		2
-29	9C1-1-5	••CHAIN - BEAD (NAA)		1
-30	AN816-5-4D	•NIPPLE -		4
-31	151-73318-7	•LINE ASSY - UPPER CYLINDER TO FORWARD CV		2
-32	AN6033-1	•VALVE - LOW PRESS. OXYGEN CHECK (STYLE D)		2
-33	151-73318-951	•LINE ASSY - LOWER CYLINDER TO FWD CV(PORT)		1
-34	151-73318-961	•LINE ASSY - FORWARD CV TO CV (PORT SIDE)		1
-35	151-73318-3	•LINE ASSY - LOWER CYLINDER TO FWD CV(STBD)		1
-36	151-73318-953	•LINE ASSY - FORWARD CV TO UNION(STBD SIDE)		1
-37	AN815-5D	•UNION -		1
-38	151-73318-107	•LINE ASSY - CHECK VALVE TO UNION		1
	AN931-5S12	•GROMMET -		1
-39	AN6033-1	•VALVE - LOW PRESS. OXYGEN CHECK (STYLE D)		1
-40	151-73318-965	•LINE ASSY - CHECK VALVE TO ELBOW (AS PER EO 05-5E-6A/138)		1
-41	755-5-4-6	•CLIP - INTEGRALLY BONDED SUPPORT (ADE)	001-100	7
	AN742D7C	•CLAMP -	101-	7
	AN515-8R10	•SCREW -		6
	4S3D10-10	•SPACER - BOLT(NAA)(AS PER EO 05-5E-6A/138)	001-614	2
-42	AN515-8R8	•SCREW -		1
	AN365-832	•NUT -		7
-43	AN833-5D	•ELBOW -		1
	AN960D816	•WASHER -		2
	2W1V32-28-64	•WASHER - PLAIN (NAA)		1
	AN924-5D	•NUT -		1
-44	151-73318-117	•LINE ASSY - REGULATOR TO BULKHEAD ELBOW (REMOVE AS PER EO 05-5E-6A/218)		1
-44A	151-73318-969	•LINE ASSY - (ELBOW TO DISCONNECT) (AS PER EO 05-5E-6A/218)		1
-44B	S-1314	•DISCONNECT ASSY - OXYGEN LINE SELF-SEALING (CAN) (AS PER EO 05-5E-6A/218)		1
-44C	151-73318-967	•LINE ASSY - (DISCONNECT TO REGULATOR) (AS PER EO 05-5E-6A/218)		1
-45	AN742D7C	•CLAMP - (REMOVE 1 AS PER EO 05-5E-6A/218)	101-	2
	AN515-8R10	•SCREW -	101-	2
	AN515-8R10	•SCREW - (REMOVE AS PER EO 05-5E-6A/218)	101-	2
	AN365-832	•NUT -	101-	2
	AN515-8R16	•SCREW - (AS PER EO 05-5E-6A/218)		1
	176-73324-10	•REGULATOR ASSY - OXYGEN	491-	1
-45A	NAS43DD3-32	•SPACER - (AS PER EO 05-5E-6A/218)		1
	AN365-832	•NUT - (REMOVE 1 AS PER EO 05-5E-6A/218)	101-	2
	176-73324	•REGULATOR ASSY - OXYGEN	001-490	1
	176-73324-10	•REGULATOR ASSY - OXYGEN	491-	1
-46	2880-5B-A1	••REGULATOR - (BAC) (TYPE D1)	001-490	1
		OR		
	2880-5B-C1	••REGULATOR - (BAC) (TYPE D1)	001-490	
	2881-5C-A1	••REGULATOR - (BAC) (TYPE D2)	491-662	1
		OR		
	2881-5B-A1	••REGULATOR - (BAC) (TYPE D2)	491-662	
	M2881-5C-A1	••REGULATOR - (BAC) (TYPE D2)	663-	1
		OR		
	2895-5C-B1	••REGULATOR - (BAC) (TYPE D2)	663-	
-47	176-73323	••ADAPTER - OXYGEN REGULATOR		1

FIGURE AND INDEX NUMBER	GROUP / MAJOR ASSEMBLY / PART NUMBER	OXYGEN SYSTEM / PILOT OXYGEN SYSTEM / 1234567 NOMENCLATURE	CODE	UNITS PER ASSY
287 -	176-73324-3	••GASKET - OXYGEN REGULATOR		2
-48	176-73324-950	••SPACER - OXYGEN REGULATOR		1
	AN515-4-12	••SCREW -		4
	AN365-440	••NUT -		4
	176-73324-3	••GASKET - OXYGEN REGULATOR	001-610	1
-49	176-73324-3	••GASKET - OXYGEN REGULATOR	611-	2
-50	176-73324-800	••SCREEN - OXYGEN RGLR (60 MESH LINEAR IN.)	611-	1
-51	AN501B4-6	••SCREW -	611-	4
-52	AN822-5D	•ELBOW -		1
-53	3H2-14-12	•HOSE - (NAA)		1
	AN737TW38	•CLAMP -		2
-54	176-73322	•LINE ASSY - PILOT OXYGEN SUPPLY		1
-55	176-73301-950	•CLIP - OXYGEN LINE		1
	AN520-10R8	•SCREW -		2
-56	AN6003T12A	•TUBE ASSY - SEAT DISCONNECT TO REGULATOR		1
	99963	•CLAMP - (MKM) (HOSE)	001-490	2
	QS200-M16S	•CLAMP - WORM DRIVE HOSE (BRE)	491-	2
		OR		
	1AGS605	•CLAMP - (BRE)	491-	
	AN742D22C	•CLAMP -		1
	AN742D16C	•CLAMP -		1
	AN520-10R12	•SCREW -		2
-57	AN6003-24A	•TUBE ASSY - SEAT DISCONNECT TO REGULATOR		1
	99963	•CLAMP - (MKM) (HOSE)	001-490	1
	QS200-M16S	•CLAMP - WORM DRIVE HOSE (BRE)	491-	1
		OR		
	1AGS605	•CLAMP - (BRE)	491-	
-58	176-73326	BRACKET ASSY - OXYGEN REGULATOR FUS STA 78 FORWARD (PORT) (SEE SECTION 3)		REF
-59	176-73327	BRACKET ASSY - OXYGEN REGULATOR FUS STA 78 REAR (PORT) (SEE SECTION 3)		REF
		-000-		

SECTION 18
RADIO EQUIPMENT

TABLE OF CONTENTS

FIGURE	TITLE	PAGE
288	FUSELAGE STA 0-123 RADIO EQUIPMENT	1184
289	FUSELAGE STA 123-236 RADIO EQUIPMENT	1190
290	REAR FUSELAGE RADIO EQUIPMENT	1196
291	VERTICAL STABILIZER RADIO EQUIPMENT	1198

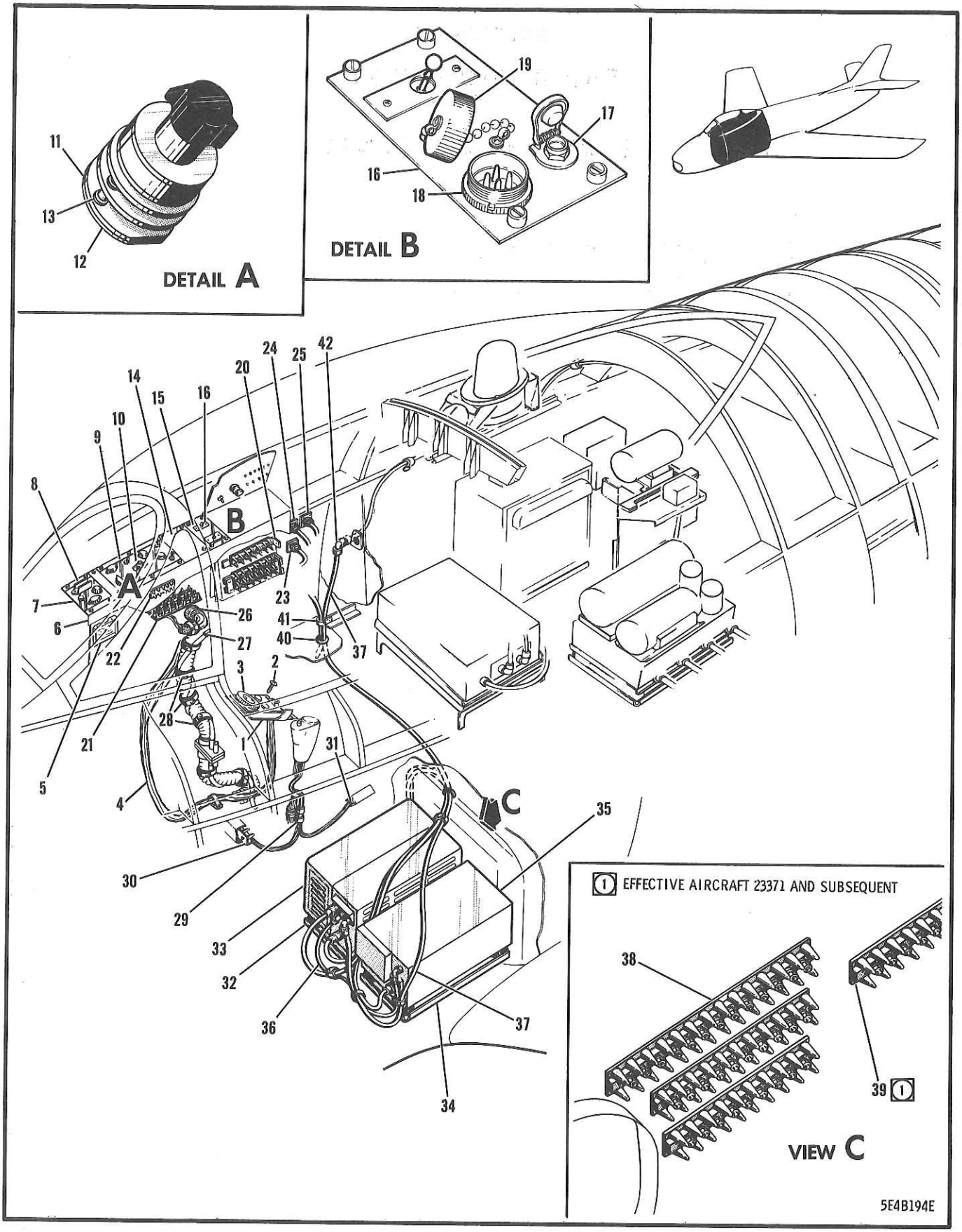

FIGURE 288 FUSELAGE STA 0-123 RADIO EQUIPMENT

FIGURE AND INDEX NUMBER	GROUP	RADIO EQUIPMENT	CODE	UNITS PER ASSY
	MAJOR ASSEMBLY	FUSELAGE STA 0-123 RADIO EQUIPMENT		
	PART NUMBER	1234567 NOMENCLATURE		
288 -	170-71031	RADIO EQUIP. INSTL - FUSELAGE STA 0-236 (SEE SECTION 3)		NP
- 1	13B-52052-26	.BRACKET - (IFF SELECTOR MOUNTING) (AS PER EO 05-5E-6A/273 & 274)		1
- 2	AN520-10R8	.SCREW - (BRACKET ATTACHING)		4
	AN960D10L	.WASHER -		4
	AN365-1032	.NUT -		2
	AN3436-2-1	.TERMINAL BLOCK ASSY - (AS PER EO 05-5E-6A/273 & 274)		1
	AN507-4R4	.SCREW -		2
	AN365-440	.NUT -		2
	176-53069	.PLACARD - ALIGHTING GEAR & FLAP WARNING (AS PER EO 05-5E-6A/273)	001-100	1
	191-53069	.NAME-PLATE - ALIGHTING GEAR & FLAP WARNING (AS PER EO 05-5E-6A/273 & 274)	101-	1
	AN3436-2-5	.TERMINAL BLOCK ASSY - (AS PER EO 05-5E-6A/273)	001-020	1
	AN515-4R5	.SCREW -	001-020	2
	AN365-440	.NUT -	001-020	2
- 3	C5037/ARC502	.PANEL - VHF CONTROL (G.F.E.) (AS PER EO 05-5E-6B/5)		1
- 4	13B-52049-2	.HARNESS ASSY - (AS PER EO 05-5E-6A/277)		1
	MS21919DG20	.CLAMP - (AS PER EO 05-5E-6A/277)		1
	AN515-10R8	.SCREW -		1
- 5	13-52049	.CARD - FREQUENCY CHANNEL DESIGNATION (AS PER EO 05-5E-6B/5)	A42	1
	13-52049-800	.CARD - FREQUENCY CHANNEL DESIGNATION	G9	1
	151-71048	.RESISTOR ASSY - AN/ARC-3 RADIO		1
	AN515-8R8	.SCREW -		4
	AN365D832	.NUT -		4
- 6	13B-52040-10	.TRAY ASSY - AN/APX-25 PANEL (AS PER EO 05-5E-6A/275)		1
- 7	C1128/APX-25	.PANEL - CODER CONTROL (G.F.E.) (AS PER EO 05-5E-6A/275)		1
- 8	C1158/APX-25	.PANEL - TRANSPONDER CONTROL (G.F.E.) (AS PER EO 05-5E-6A/275)		1
	AN3106B20-27S	.CONNECTOR - (AS PER EO 05-5E-6A/275)		1
- 9	157-71041	.ADAPTER ASSY - AN/ARN6 RADIO COMP CTL PNL		2
	157-71041-3	..PANEL - AN/ARN6 RADIO COMPASS ADAPTER		1
	PF3-1/2-38	..STUD - PANEL FASTENER (DFC)		3
	PS3-1/2	..SPRING - PANEL FASTENER (DFC)		3
	PC3-1/2	..CUP - PANEL FASTENER (DFC)		3
-10	C403A	.PANEL - AN/ARN6 RADIO COMPASS CTL (G.F.E.) OR		1
	C403A/A	.PANEL - AN/ARN6 RADIO COMPASS CONTROL (G.F.E.) (REWORKED)		
	AN515-8R8	.SCREW -		4
	AN365-832	.NUT -		4
-11	144-71097-950	.INSULATOR - RADIO COMP LOOP CTL SW GUARD		1
-12	144-71098-950	.GUARD - RADIO COMPASS LOOP CONTROL SWITCH		1
-13	4S3-6-8	.SPACER - BOLT (NAA)		2
	COMMERCIAL	.SCREW - PHILLIPS BINDER HD ST (5-40 X 7/8)		2
-14	13B-52053-2	.PLATE ASSY - BLANKING (AS PER EO 05-5E-6A/275)		1
-15	161-71008-952	.PANEL ASSY - RADIO CONSOLE REAR CLOSE-OUT	001-300	1
	161-71008-800	.PANEL ASSY - RADIO CONSOLE REAR CLOSE-OUT	301-490	1
	161-71008-804	.PANEL ASSY - RADIO CONSOLE REAR CLOSE-OUT	491-	1
	PF3-1/2-38	..STUD - PANEL FASTENER (DFC)		4
	PS3-1/2	..SPRING - PANEL FASTENER (DFC)		4
	PC3-1/2	..CUP - PANEL FASTENER (DFC)		4
	AN3160P5	.CIRCUIT-BREAKER - NON-TRIP FREE SWITCH TYPE (PITOT HEATER DUCT) (AS PER EO 05-5E-6A/277)		1

FIGURE AND INDEX NUMBER	GROUP	RADIO EQUIPMENT	CODE	UNITS PER ASSY
	MAJOR ASSEMBLY	FUSELAGE STA 0-123 RADIO EQUIPMENT		
	PART NUMBER	1234567 NOMENCLATURE		
288 -16	AN3160-5	•CIRCUIT-BREAKER - NON-TRIP FREE SWITCH TYPE (DROP TANK EMPTY)	301-	1
	AN515-6R5	•SCREW -	001-300	2
	AN515-6R5	•SCREW -	301-	4
	13A-50015	•NAME-PLATE - PITOT HEATER DUCT CKT/BKR (AS PER EO 05-5E-6A/77)		1
	13A-50025	•NAME-PLATE - DROP TANK EMPTY WARNING	301-	1
-17	420-60-0054	•JACK - (HUG) (AS PER EO 05-5E-6A/252)		1
	23559	•COVER - (CES) (AS PER EO 05-5E-6A/250)		1
	5574	•NUT - (ICA) (AS PER EO 05-5E-6A/252)		1
		OR		
	8923	•NUT - (WCL)		
-18	S0-166	•RECEPTACLE - (CLS)(AS PER EO 05-5E-6A/252)		1
-19	55620-1	•COVER - (CLS) (AS PER EO 05-5E-6A/252)		1
	AN515-4R5	•SCREW -		1
	AN960D4	•WASHER -		1
	AN365-440	•NUT -		1
-20	151-71054-801	•PANEL ASSY - RADIO CONTROL TERMINAL		3
	151-71054-11	••STRIP - RADIO CONTROL TERMINAL PANEL		1
	NAS45-6-13	••TERMINAL BLOCK ASSY - ELECTRICAL		1
	AN507-440R6	••SCREW -		2
	AN365-440	••NUT -		2
	170-71031-950	•STRIP - ELECTRICAL CONNECTOR		2
	AN515-6R6	•SCREW -		6
	AN365-632	•NUT -		6
	AN340-6	•NUT -		39
	AN936A6	•WASHER -		39
	AN960-6	•WASHER -		39
-21	NAS45-6-14	•TERMINAL BLOCK ASSY - ELECTRICAL	001-370	1
	NAS45-6-16	•TERMINAL BLOCK ASSY - ELECTRICAL	371-	1
	AN3433-2-2	•BUS-BAR -		1
	AN936A6	•WASHER -		28
	AN960-6	•WASHER -		28
	AN340-6	•NUT -		28
-22	AN3436-2-6	•TERMINAL BLOCK ASSY - ELECTRICAL (AS PER EO 05-5E-6A/252)		1
	AN515-4R6	•SCREW -		2
	AN960D4	•WASHER -		2
	2W1V8-8-32	•WASHER - (NAA)		2
	AN365-440	•NUT -		2
-23	AN3100PR28-12P	•CONNECTOR -		1
	AN3106B28-12S	•CONNECTOR -		1
	AN3057-16	•ADAPTER -		1
	AN3054-16	•NUT -		1
	AN931-8-20	•GROMMET -	001-667	1
	2W1C64-44-015	•WASHER - PLAIN (NAA)	668-	2
	2W1R36-44-120	•WASHER - PLAIN (NAA)	668-	1
	4G3-28	•GASKET - RADIO PRESSURE LUG (NAA)		1
	AN515-6R8	•SCREW -		4
	2W1V8-8-32	•WASHER - PLAIN (NAA)		4
	AN365-632	•NUT -		4
	2L7-2	•LUG - SAFETY (NAA)		1
-24	AN3057-16	•ADAPTER -		1
	AN3100PR-24-28P	•CONNECTOR -		1
	AN3106B24-28S	•CONNECTOR -		1
	AN3054-16	•NUT -		1
	AN931-8-20	•GROMMET -	001-610	1
	2W1C64-44-015	•WASHER - PLAIN (NAA)	611-	2
	2W1R32-44-120	•WASHER - PLAIN (NAA)	611-	1
	4G3-24	•GASKET - RADIO PRESSURE LUG (NAA)		1
	AN515-6R8	•SCREW -		4
	2W1V8-8-32	•WASHER - PLAIN (NAA)		4
	AN365-632	•NUT -		4
	2L7-2	•LUG - SAFETY (NAA)		1

FIGURE AND INDEX NUMBER	GROUP	RADIO EQUIPMENT	CODE	UNITS PER ASSY
	MAJOR ASSEMBLY	FUSELAGE STA 0-123 RADIO EQUIPMENT		
	PART NUMBER	1234567 NOMENCLATURE		
288 -25	AN3100PR20-27P	•CONNECTOR -		1
	AN3106B20-27S	•CONNECTOR -		1
	AN3057-12	•ADAPTER -		1
	AN3054-12	•NUT -		1
	AN931-6-16	•GROMMET -	001-610	1
	2W1C56-35-015	•WASHER - PLAIN (NAA)	611-	2
	2W1R24-35-120	•WASHER - PLAIN (NAA)	611-	1
	4G3-20	•GASKET - RADIO PRESSURE LUG (NAA)		1
	AN515-4R10	•SCREW -		4
	2W1V8-8-32	•WASHER - PLAIN (NAA)		4
	AN365-440	•NUT -		4
	2L7-2	•LUG - SAFETY (NAA)		1
-26	TBF20-29PS	•CONNECTOR - (CED) (AS PER EO 05-5E-6A/275)		1
	AN515-4R7	•SCREW - (CONNECTOR ATTACHING)		4
	2L7-2	•LUG - (NAA)		2
	AN960D4L	•WASHER -		2
	AN365-440	•NUT -		4
-27	13B-52037-2	•HARNESS ASSY - CODER CONTROL (AS PER EO 05-5E-6A/275)		1
-28	123-71063	•STRAP ASSY - MICROPHONE & HEADSET CORD		3
-29	AN3106B16S1P	•CONNECTOR -		1
	AN3106B16S1S	•CONNECTOR -		1
	AN3057-8	•ADAPTER -		2
	AN742D18C	•CLAMP -		1
	AN515-8R8	•SCREW -		1
-30	AN936A6	•LOCK-WASHER -		4
	AN960-6	•WASHER -		4
	AN340-6	•NUT -		4
-31	755-4-2-6	•CLIP - INTEGRALLY BONDED SUPPORT (ADE)		2
	1J1-2-3-18	•JUMPER - WIRE (NAA)		2
	AN515-8R7	•SCREW -		2
	AN365-832	•NUT -		2
-32	172-71023	•MOUNT ASSY - MT-238-C/ARC-3 RADIO XMTR		1
-33	T5015/ARC-502	•TRANSMITTER - (G•F•E•) (AS PER EO 05-5E-6B/5)		1
	AN520-10R10	•SCREW -		4
	CR18U	•CRYSTAL - 3-CHANNEL (10 X /7010•00) (G•F•E•) (FREQUENCY 126•8MC/S) (AS PER EO 05-5E-6B/5)		1
	CR18U	•CRYSTAL - 7-CHANNEL (10 X /7650•00) (G•F•E•) (FREQUENCY 137•7MC/S) (AS PER EO 05-5E-6B/5)		1
	CR18U	•CRYSTAL - 22-CHANNEL (10 X /6750•00) (G•F•E•) (FREQUENCY 121•5MC/S) (AS PER EO 05-5E-6B/5)		1
	PL-151A	•PLUG - (APC)		1
	U-15/U	•PLUG - (MIC)		1
-34	172-71022	•MOUNT ASSY - MT-237-C/ARC-3 RADIO RECEIVER		1
-35	R5009/ARC502	•RECEIVER - (G•F•E•) (AS PER EO 05-5E-6B/5)		1
	AN520-10R10	•SCREW -		4
	CR18U	•CRYSTAL - 3-CHANNEL (10 X /8155•714) (G•F•E•) (FREQUENCY 126•18MC/S) (AS PER EO 05-5E-6B/5)		1
	CR18U	•CRYSTAL - 7-CHANNEL (10 X /8380•00) (G•F•E•) (FREQUENCY 137•7MC/S) (AS PER EO 05-5E-6B/5)		1
	CR18U	•CRYSTAL - 22-CHANNEL (10 X 8423•077) (G•F•E•) (FREQUENCY 121•5MC/S) (AS PER EO 05-5E-6B/5)		1
	PL-153A	•PLUG - (APC)		1
	295006	•STRAP - (UCF)	001-300	4
	295006	•STRAP - (UCF)	301-	6
-36	151-71044-16	•CABLE ASSY - RADIO VHF COAXIAL		1
	PL-259A	••PLUG - SINGLE-CONTACT (APC)		2

FIGURE AND INDEX NUMBER	GROUP	RADIO EQUIPMENT	CODE	UNITS PER ASSY
	MAJOR ASSEMBLY	FUSELAGE STA 0-123 RADIO EQUIPMENT		
	PART NUMBER	1234567 NOMENCLATURE		
288 -	M-359A	•ADAPTER - RIGHT ANGLE (APC)		3
-37	151-71044-18	•CABLE ASSY - RADIO VHF COAXIAL		1
	PL-259A	••PLUG - SINGLE-CONTACT (APC)		2
-38	NAS45-6-13	•TERMINAL BLOCK ASSY - ELECTRICAL		1
	NAS45-6-10	•TERMINAL BLOCK ASSY - ELECTRICAL (REPLACE WITH TWO AN3436-2-5)		1
	NAS45-6-9	•TERMINAL BLOCK ASSY - ELECTRICAL (REPLACE WITH AN3436-2-5 & AN3436-2-4)		1
	AN515-4R6	•SCREW -		7
	AN365-440	•NUT -		7
	AN936A6	•LOCK-WASHER -		32
	AN960-6	•WASHER -		32
	AN340-6	•NUT -		32
	397-13	•COVER - ELECTRICAL TERMINAL BLOCK (HEN)	201-	1
	397-10	•COVER - ELECTRICAL TERMINAL BLOCK (REPLACE WITH TWO 397-5) (HEN)	201-	1
	397-9	•COVER - ELECTRICAL TERMINAL BLOCK (REPLACE WITH TWO 397-5 & 397-4) (HEN)	201-	1
-39	NAS45-6-4	•TERMINAL BLOCK ASSY - ELECTRICAL	371-	1
	AN515-4R6	•SCREW -	371-	2
	AN365-440	•NUT -	371-	2
	AN936A6	•LOCK-WASHER -	371-	4
	AN960-6	•WASHER -	371-	4
	AN340-6	•NUT -	371-	4
	397-4	•COVER - ELECTRICAL TERMINAL BLOCK (HEN)	371-	1
	AN931-14S20	•GROMMET -		1
	M-359A	•ADAPTER - RIGHT ANGLE (APC)		1
-40	295134-14C	•GROMMET - (UCF)		1
	AN931A16S22	•GROMMET -		1
-41	A3044SF-4	•CLAMP - HARNESS (TIN)		1
	AN515-8R8	•SCREW -		1
	AN365-832	•NUT -		1
	M-359A	•ADAPTER - RIGHT ANGLE (APC)		1
-42	PL-274	•ADAPTER - BULKHEAD (APC)		1
	AN735D11	•CLAMP -		2
	AN500A8-9	•SCREW -		1
	AN960A8	•WASHER -		2
	AN365-832	•NUT -		1
		(CONTINUED SEE FIG. 289)		

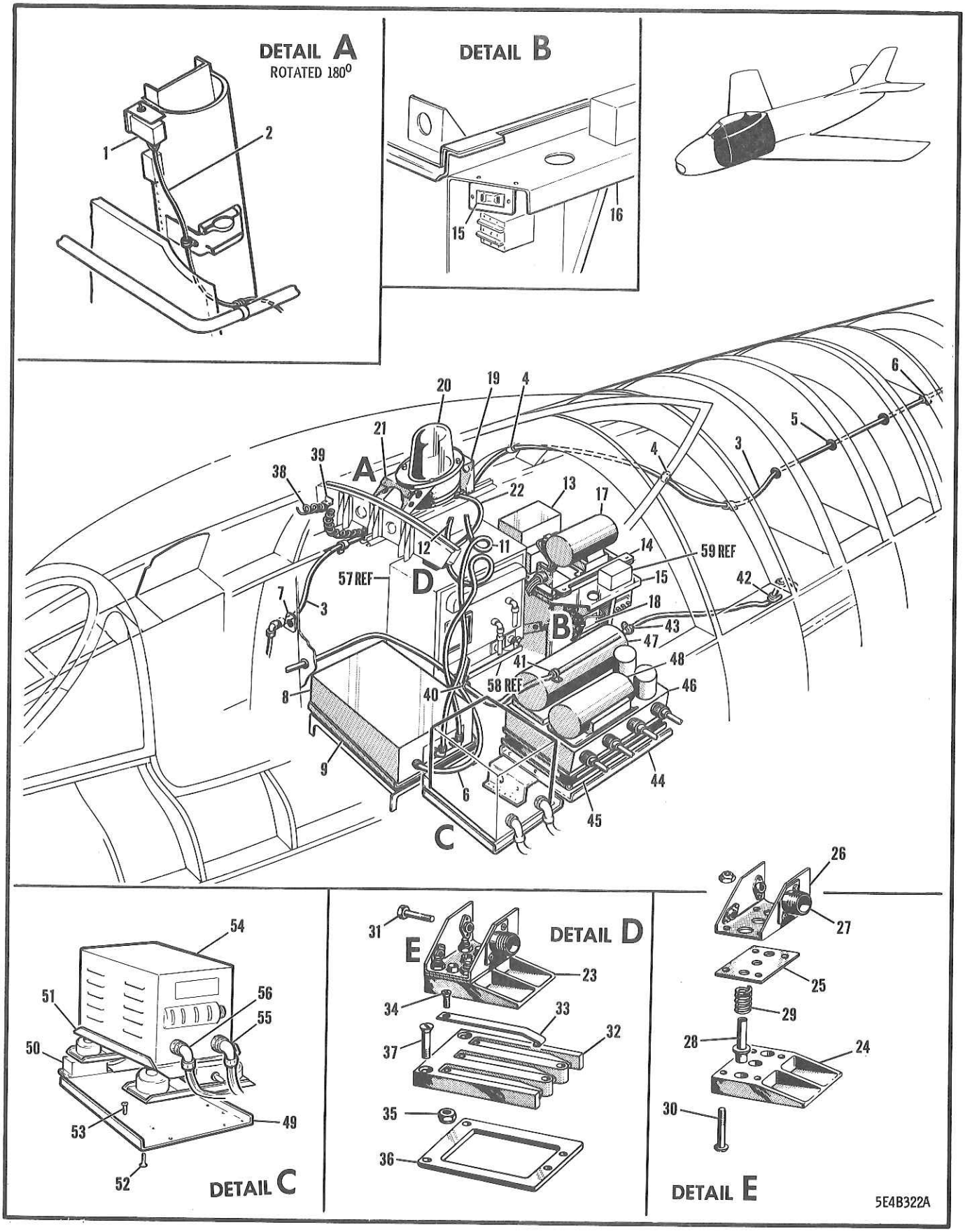

FIGURE 289 FUSELAGE STA 123-236 RADIO EQUIPMENT

FIGURE AND INDEX NUMBER	GROUP	RADIO EQUIPMENT	CODE	UNITS PER ASSY
	MAJOR ASSEMBLY	FUSELAGE STA 123-236 RADIO EQUIPMENT		
	PART NUMBER	1234567 NOMENCLATURE		
289 -	170-71031	RADIO EQUIP. INSTL - FUSELAGE STA 0-236 (SEE FIG. 288)		REF
- 1	BZ7RQ1T	.SWITCH - SPDT PLUNGER (MSC) (DISTRESS SIGNAL) (AS PER EO 05-5E-6A/113)		1
	AN515-8R12	.SCREW -		1
	AN935-8	.LOCK-WASHER -		1
	AN960-8L	.WASHER -		3
	AN340-8	.NUT -		1
- 2	10C2E16-24	.CONDUIT - (NAA)		1
	MS21919WDG4	.CLAMP - LOOP TYPE SUPPORT CUSHIONED		2
	AN515-8R8	.SCREW -		1
- 3	13-52101-800	.CABLE ASSY - COAXIAL LINE (AS PER EO 05-5E-6A/211)		1
	PL-259A	..PLUG - SINGLE-CONTACT CONNECTOR (APC) (FUSELAGE STATION 123)		1
	UG-1186/U	..JACK - (G.F.E.) (FUSELAGE STA 205) (AS PER EO 05-5E-6A/211)		1
	M-359A	.ADAPTER - RIGHT ANGLE (APC)		1
- 4	AN735D11	.CLAMP -		2
	AN500A8-9	.SCREW -		1
	AN960A8	.WASHER -		2
	AN365-832	.NUT -		1
	2C33	.CLIP - (NAA)	101-	1
	AN742D9C	.CLAMP -	101-	1
	AN515-8R9	.SCREW -	101-	1
	AN365-832	.NUT -	101-	1
- 5	AN931A8-13	.GROMMET -		3
- 6	295004	.STRAP - (UCF)		7
	49184	.CLIP - (UCF)		7
	AN742D9C	.CLAMP -		3
- 7	172-71012	.PLATE - RADIO WIRING CLOSE-OUT		1
	AN515-8R7	.SCREW -		3
	295134-20A	.GROMMET - (UCF)		1
- 8	R101A/ARN6	.RECEIVER - COMPASS (G.F.E.)		1
- 9	151-71082	.MOUNT ASSY - RADIO COMPASS		1
	MT274A/ARN6	..MOUNT ASSY - RADIO COMPASS (G.F.E.)		1
		OR		
	MT274B/ARN6	..MOUNT ASSY - RADIO COMPASS (G.F.E.)		
		OR		
	MT274C/ARN6	..MOUNT ASSY - RADIO COMPASS (G.F.E.)		
	151-71080	..STUD - MT274A/ARN6 RADIO COMPASS MOUNT		4
	151-71081	..CHART - MT274B/ARN6 RADIO COMPASS MOUNT		1
	AN316-4R	..CHECK-NUT -		4
	AN515-8R8	.SCREW -		8
	MC-136	.COUPLING - (G.F.E.)		1
	1J1-1A1A5	.JUMPER - WIRE (NAA)		1
-10	4974Y	.CABLE - (WDM) (COAXIAL)		1
	AN931-6-16	.GROMMET -		1
-11	CG405/ARN6	.CABLE - (G.F.E.)		1
	M-359A	.ADAPTER - RIGHT ANGLE (APC)		2
	295004	.STRAP - (UCF)		3
	295005	.STRAP - (UCF)		2
	295006	.STRAP - (UCF)		6
-12	CG555/ARN6	.CABLE - (G.F.E.)		1
	AN659-4	.TERMINAL -	001-490	1
	35481	.TERMINAL - (AMP)	491-	1
	AN659-3	.TERMINAL -		1
	AN515-8R8	.SCREW -		1
	AN960D8L	.WASHER -		1
	AN365-832	.NUT -		1

FIGURE AND INDEX NUMBER	GROUP	RADIO EQUIPMENT	CODE	UNITS PER ASSY
	MAJOR ASSEMBLY	FUSELAGE STA 123-236 RADIO EQUIPMENT		
	PART NUMBER	1234567 NOMENCLATURE		
289 -13	MIL-C-5816	•CONVERTER - STATIC (G•F•E•) (REMOVED ON SABRE 5A FOR BALLAST SEE FIG• 297)		1
		OR		
	MIL-C-5816A	•CONVERTER - STATIC (G•F•E•) (RCAF REF 8EB/1621) (MT AS PER EO 05-5E-6A/182)		
	AN515-6R8	•SCREW -		4
-14	161-74034	•MOUNT ASSY - GUNSIGHT AC POWER SUPPLY		1
	161-74034-3	••PAN - GUNSIGHT AC POWER SUPPLY MOUNTING		1
	161-74034-5	••CLAMP - GUNSIGHT AC POWER SUPPLY MOUNTING		1
	AN515-8R8	••SCREW - (CLAMP TO PAN ATTACHING)		2
	2W1AL12-10-72	••WASHER - PLAIN (NAA)		2
	AN365-832	••NUT -		2
-15	151-71090-800	•SHELF ASSY - REAR RADIO COMPT STA 144-155 (AS PER EO 05-5E-6A/193)		1
	AN8008D4	••INSULATOR -		6
	AN749-2-3	••JUMPER -		2
	AN515-6R7	••SCREW -		2
	AN515-6R6	••SCREW -		22
	AN365-632	••NUT -		24
	13B-53020	••DECAL - LONGITUDINAL BUNGEE ACTUATOR (AS PER EO 05-5E-6A/193)		1
	AN520-10R7	••SCREW -		2
	AN507-1032R9	••SCREW -		7
	AN520-10R8	•SCREW -		6
	AN520-10R7	•SCREW -		8
-16	K7128081-P1	•RECEPTACLE - AC FACILITY OUTLET		1
	AN515-6R10	•SCREW -		2
	AN365-632	•NUT -		2
-17	172-74025-10	•POWER SUPPLY ASSY - TYPE A-4 GUNSIGHT AC		1
	161-74035	••BASE - A-ICM GUNSIGHT		1
	172-74026	••BRACKET - GUNSIGHT AC POWER CONNECTOR		1
	AN509-8R6	••SCREW - (BRACKET TO BASE ATTACHING)		4
	AN365-832	••NUT -		4
	AN3102A22-24P	••CONNECTOR -		1
	AN515-4R6	••SCREW - (RECP TO CONNECTOR BRACKET ATT)		4
	AN365-440	••NUT -		4
	SPEC 5892	••TRANSFORMER - (PEP)		1
		OR		
	30011	••TRANSFORMER - (HMC)		
	AN509-8R6	••SCREW - (TRANSFORMER TO BASE ATTACHING)		4
	AN365-832	••NUT -		4
	AN3499-1	••INVERTER -		1
	AN509-8R9	••SCREW - (INVERTER TO BASE ATTACHING)		4
	AN365-832	••NUT -		4
	AN3106B14S7S	••CONNECTOR -		1
	AN3057-6A	••ADAPTER -		1
	AN509-8R15	•SCREW -		4
	AN509-8R16	•SCREW -		2
	NAS43C-3-8	•SPACER -		6
	AN8013-1	•WASHER -		6
	AN3-4A	•BOLT -		2
	AN365-832	•NUT -		6
	AN3106-22-24S	•CONNECTOR -		1
	AN3057-12	•ADAPTER -		1
-18	237-EAU	•RELAY ASSY - 10-AMP RESISTIVE 29-VDC (LRC)		1
	151-54428	•COVER ASSY - ELECTRICAL INFLATABLE CANOPY SEAL RELAY		1
	AN515-6R7	•SCREW -		2
-19	152-71022	•SUPPORT - RADIO COMPASS LOOP ANTENNA		1
	152-71022-802	•SPARE PART ASSY FOR 152-71022		
	AN520-10R20	•SCREW -		2
	AN960-10L	•WASHER -		4
	AN365-1032	•NUT -		2

FIGURE AND INDEX NUMBER	GROUP	RADIO EQUIPMENT	CODE	UNITS PER ASSY
	MAJOR ASSEMBLY	FUSELAGE STA 123-236 RADIO EQUIPMENT		
	PART NUMBER	1234567 NOMENCLATURE		
289 -20	AS313A/ARN6	•ANTENNA - LOOP (G•F•E•)		1
		OR		
	AS313B/ARN6	•ANTENNA - LOOP (G•F•E•)		
	AN515-8R8	•SCREW -		8
	AN960-8	•WASHER -		16
	AN365-832	•NUT -		8
-21	152-71039	•SUPPORT ASSY - RADIO COMP LOOP ANTENNA FWD		1
	152-71039-800	•SPARE PART ASSY FOR 152-71039 (ATTACH WITH AN520-10R10)		
	AN520-10R8	•SCREW -		4
	AN960-10L	•WASHER -		8
	AN365-1032	•NUT -		4
-22	CG556/ARN6	•CABLE - (G•F•E•)		1
	AN659-3	•TERMINAL -		2
	AN742D11C	•CLAMP -		1
	AN742D10	•CLAMP -		1
	AN3-7A	•BOLT -		1
	AN960-10	•WASHER -		1
	AN365-1032	•NUT -		1
	AN3102PR14S1P	•CONNECTOR -		1
	4G3-14	•GASKET - PRESSURE LUG (NAA)		2
	2L7-2	•LUG - SAFETY (NAA)		1
	AN515-4R6	•SCREW -		4
	AN365-440	•NUT -		4
-23	151-71097-12	•HOLDER ASSY - RADIO COMP LOOP DISC• BRUSH		1
-24	151-71088	••HOLDER - RADIO COMPASS LOOP DISC• BRUSH		1
-25	151-71069	••INSULATOR - RADIO COMP LOOP DISCONNECT		1
	151-71098	••BOX ASSY - RADIO COMPASS LOOP DISC• JCT		1
-26	151-71098-3	•••BOX - RADIO COMPASS LOOP DISC• JUNCTION		1
-27	151-71098-5	•••RECEPTACLE - RADIO COMPASS LOOP DISC• (MAKE FROM AN3102-145-1P)		1
	AN515-4R5	•••SCREW - (RECEPTACLE TO BOX ATTACHING)		3
	AN365-440	•••NUT -		3
-28	151-71117	••CONTACTOR - RADIO COMPASS LOOP DISCONNECT		3
-29	142-58306	••SPRING - HYD CANOPY SAFETY STOP RETURN		3
-30	AN515-8R10	••SCREW - (BOX TO HOLDER ATTACHING)		4
	AN365-832	••NUT -		4
-31	AN3-4A	•BOLT -		3
-32	151-71084	•BASE - RADIO COMPASS LOOP DISCONNECT		1
-33	151-71086	•STRIP - RADIO COMPASS LOOP DISC• CONTACTOR		3
-34	AN507-632R7	•SCREW -		3
-35	AN365-632	•NUT -		3
-36	151-71099	•SPACER - RADIO COMP LOOP DISCONNECT BASE		1
-37	AN509-8R20	•SCREW -		4
	AN3107-16S1S	•CONNECTOR -		1
	AN3057-8	•ADAPTER -		1
-38	13B-52032	•CORD ASSY - RADIO COMPASS SENSE ANTENNA (AS PER EO 05-5E-6A/208)		1
	K13-106-4	••CORD - RADIO COMPASS SENSE ANTENNA (AS PER EO 05-5E-6A/208)		1
	151-71023-5	••TUBING - RADIO COMPASS SENSE ANTENNA		2
	AN659-1	••TERMINAL -		1
	140-71043	••CAP - RADIO COMPASS SENSE ANTENNA DISC•		1
	K13-106-6	••PIN - RADIO COMPASS SENSE ANTENNA DISC• (AS PER EO 05-5E-6A/208)		1
	K13-106-8	••INSULATOR - RADIO COMPASS SENSE ANTENNA DISC• CAP (AS PER EO 05-5E-6A/208)		2
	AN960C4	••WASHER -		2
	AN935-4	••LOCK-WASHER -		1
	AN915-4R10	••SCREW -		1
-39	754-3-2-6	•CLAMP - (ADE) (AS PER EO 05-5E-6A/208)		2
	AN515-8R7	•SCREW -		2
	AN365-832	•NUT -		2
	PL-274	•ADAPTER - BULKHEAD (APC)		1

FIGURE AND INDEX NUMBER	GROUP	RADIO EQUIPMENT	CODE	UNITS PER ASSY
	MAJOR ASSEMBLY	FUSELAGE STA 123-236 RADIO EQUIPMENT		
	PART NUMBER	1234567 NOMENCLATURE		
289 -	2W1SR40-32-62	•WASHER - PLAIN (NAA)		1
	151-71025	•LUG - RADIO COMPASS SENSE ANTENNA CORD		2
-40	AN742D20C	•CLAMP -		1
	AN743-6	•BRACKET -	201-	1
-41	AN742D4C	•CLAMP -		1
	AN515-8R7	•SCREW -		2
	AN365-832	•NUT -		2
-42	AN742D6C	•CLAMP -		2
-43	AN742D10C	•CLAMP -		1
	AN515-8R7	•SCREW -		3
	AN365-832	•NUT -		3
-44	13B-52034-6	•TRAY ASSY - AN/APX-25 EQUIPMENT MOUNTING (AS PER EO 05-5E-6A/275)		1
	NAS221-8	•SCREW - (TRAY ATTACHING)		1
	AN960D10L	•WASHER -		1
-45	MT236/ARC3	•MOUNTING - (G•F•E•)		1
	NAS221-8	•SCREW - (MOUNTING ATTACHING) (AS PER EO 05-5E-6A/275)		1
	AN960D10L	•WASHER -		1
-46	J5007/ARC502	•BOX - POWER JUNCTION (G•F•E•) (AS PER EO 05-5E-6B/5)		1
-47	DY21/ARC3	•DYNAMOTOR - (G•F•E•)		1
-48	DY22/ARC3	•DYNAMOTOR - (G•F•E•)		1
	PL-148A	•PLUG - (APC)		1
	PL-153A	•PLUG - (APC)		1
	U15/U	•PLUG - (MIC)		1
	U16/U	•PLUG - (MIC)		1
	AN520-10R10	•SCREW -		4
	10C2D6-14	•CONDUIT - (NAA)		1
	13B-52034-2	•TRAY ASSY - CODER MOUNTING (AS PER EO 05-5E-6A/275)		1
-49	13B-52034-10	••TRAY -		1
-50	F245/APX-25	••FILTER - (G•F•E•)		1
	AN515-8R6	••SCREW -		4
	AN365-832	••NUT -		4
-51	MT-1151/APX-25	•BASE - MOUNTING (G•F•E•) (AS PER EO 05-5E-6A/275)		1
-52	AN509-10R8	•SCREW - (BASE TO TRAY ATTACHING)		16
	AN960D10L	•WASHER -		16
	NMJ-02	•NUT - (ESN)		16
-53	NAS221-8	•SCREW - (TRAY ATT)(AS PER EO 05-5E-6A/275)		4
	AN960D10L	•WASHER -		4
-54	KY95/APX-25	•CODER - (G•F•E•) (AS PER EO 05-5E-6A/275) OR		1
	KY95A/APX-25	•CODER - (G•F•E•)		
-55	13B-52037-4	•HARNESS ASSY - (AS PER EO 05-5E-6A/275)		1
-56	13B-52037-6	•HARNESS ASSY - (AS PER EO 05-5E-6A/275)		1
	MS21919DG17	•CLAMP - (AS PER EO 05-5E-6A/275)		1
	AN515-8R7	•SCREW -		1
	AN365-832	•NUT -		1
	AN515-8R8	•SCREW - (HARNESS GROUND)		2
	AN960D8	•WASHER -		2
	AN365-832	•NUT -		2
-57	RT82/APX-6	TRANSPONDER - (G•F•E•) (SEE SECTION 19)		REF
-58	161-74045	MOUNT ASSY - RADAR RECEIVER TRANSMITTER (SEE SECTION 19)		REF
-59	SPEC 32471	RELAY - INSTRUMENT INVT TYPE D1 (G•F•E•) (SEE SECTION 10)		REF
		(CONTINUED SEE SECTION 19)		

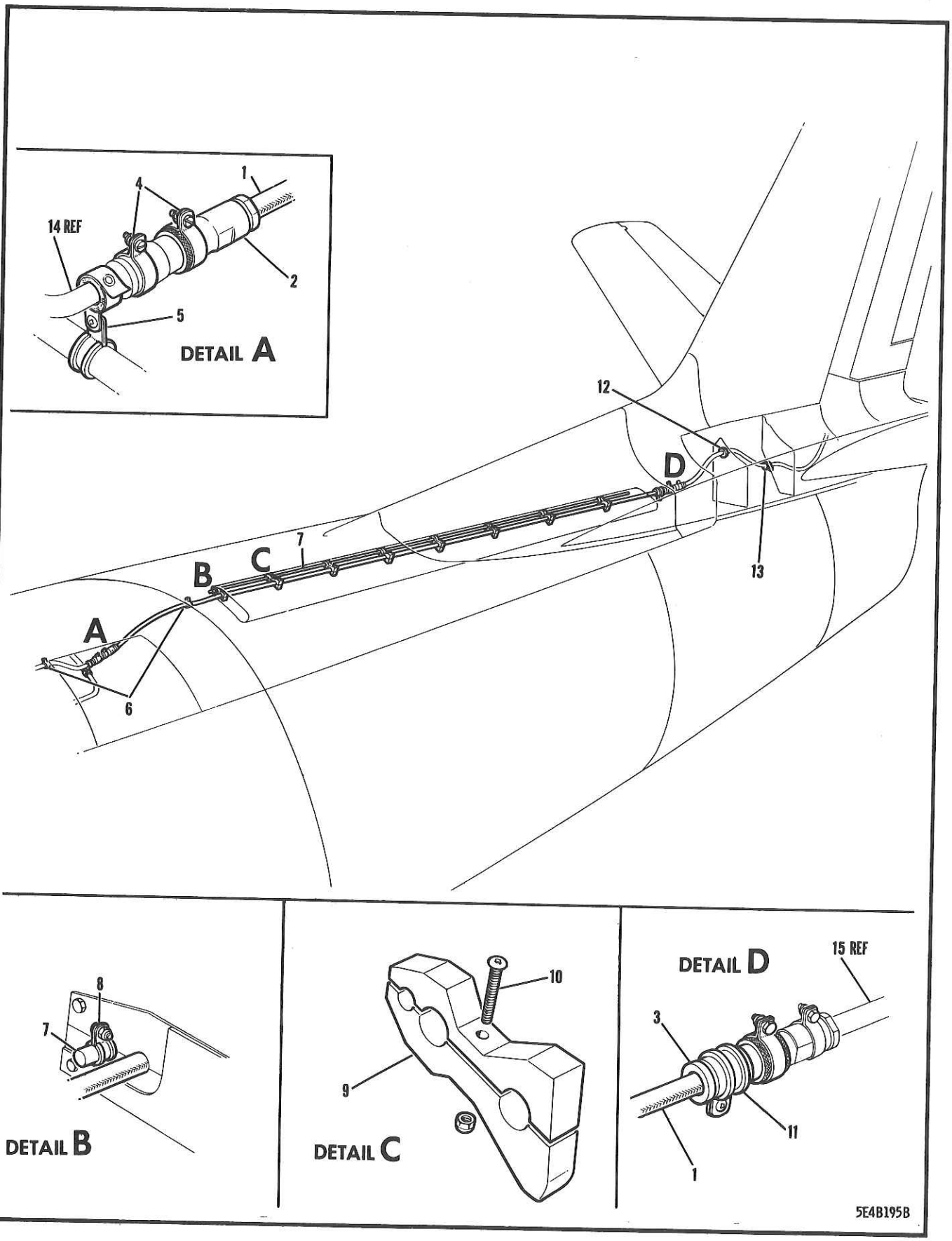

FIGURE 290 REAR FUSELAGE RADIO EQUIPMENT

FIGURE AND INDEX NUMBER	GROUP / MAJOR ASSEMBLY / PART NUMBER	RADIO EQUIPMENT / REAR FUSELAGE RADIO EQUIPMENT / 1234567 NOMENCLATURE	CODE	UNITS PER ASSY
290 -	170-71001	RADIO EQUIP. INSTL - FUSELAGE COMPLETE (SEE FIG. 1)		NP
	151-71044-800	.CABLE ASSY - RADIO COAXIAL VHF (AS PER EO 05-5E-6A/211)		1
- 1	151-71044-7	..CABLE - TEFLON COAXIAL VHF (RG-87A/U MAY BE SUBSTITUTED)		1
- 2	UG-1185/U	..PLUG - (G.F.E.) (AS PER EO 05-5E-6A/211)		1
- 3	UG-21/U	..PLUG - (G.F.E.)		1
- 4	AN735D12	.CLAMP -	001-059	1
	AN742D14C	.CLAMP -		1
	AN735D11	.CLAMP -		1
	AN743-12	.BRACKET -		1
	AN515-8R8	.SCREW -	001-059	1
	AN500A8-8	.SCREW -	001-059	2
	AN500A8-8	.SCREW -	060-	1
	AN365-832	.NUT -	001-059	3
	AN365-832	.NUT -	060-	2
	46-238	.CLAMP - CABLE (APC)	101-	1
		OR		
	10H-1774	.CLAMP - CABLE (BRITISH)		
		OR		
	M-297	.CLAMP - CABLE (SIGNAL CORPS)		
	AN742D10C	.CLAMP -		1
	AN515-8-24	.SCREW -		1
	AN960-8	.WASHER -		2
	NAS42DD6-56	.SPACER -		1
	AN365-832A	.NUT -		2
	46-238	.CLAMP - (APC) (CABLE)	101-	1
		OR		
	10H-1774	.CLAMP - CABLE (BRITISH)	101-	
		OR		
	M-297	.CLAMP - CABLE (SIGNAL CORPS)	101-	
- 5	49184	.CLIP - (UCF)		1
	295004	.STRAP - (UCF)		1
- 6	A3044SF-4	.CLAMP - HARNESS (TIN)	001-059	2
	AN742D10C	.CLAMP -	060-	2
	AN515-8R8	.SCREW -	060-	2
	AN365-832	.NUT -	060-	1
- 7	151-71055	.LINE - RADIO COAXIAL CABLE ATTACHING		1
- 8	755-4-2-6	.CLIP - INTEGRALLY BONDED SUPPORT (ADE)		1
	AN515-8R8	.SCREW -		1
	AN365-832	.NUT -		1
- 9	140-71059-3	.CLAMP BLOCK - RADIO COAXIAL CABLE		8
	140-71059-5	.CLAMP BLOCK - RADIO COAXIAL CABLE		8
-10	AN515-6R14	.SCREW -		8
	AN365-632	.NUT -		8
-11	AN742D10C	.CLAMP -		1
	4S3-8-20	.SPACER - BOLT (NAA)		1
-12	AN931-9-13	.GROMMET -		1
-13	AN742-11C	.CLAMP -		1
-14	13-52101-22	CABLE ASSY - COAXIAL LINE (SEE FIG. 289)		REF
-15	151-71044-20	CABLE ASSY - RADIO VHF COAX. (SEE FIG. 291)		REF

-000-

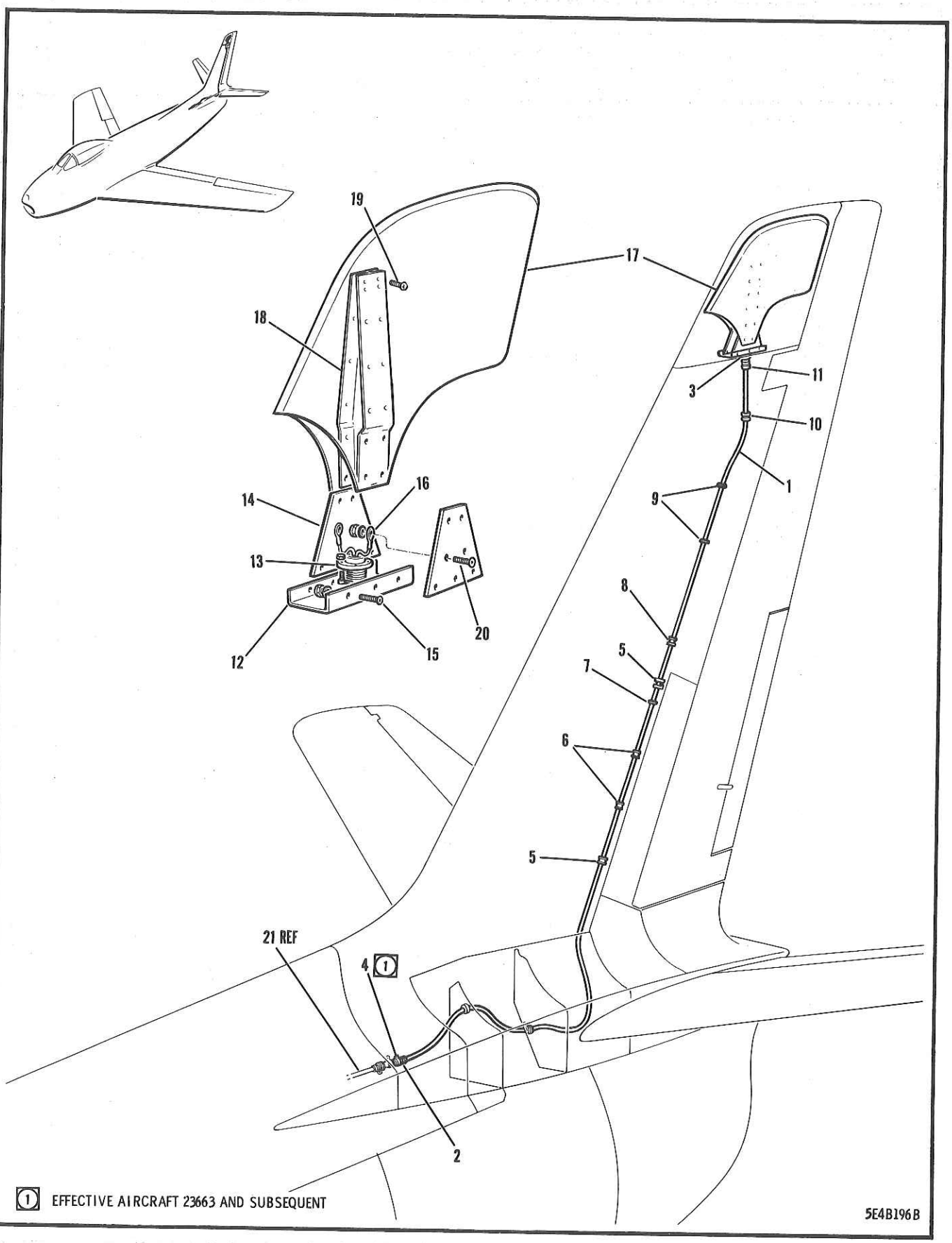

FIGURE 291 VERTICAL STABILIZER RADIO EQUIPMENT

FIGURE AND INDEX NUMBER	GROUP	RADIO EQUIPMENT	CODE	UNITS PER ASSY
	MAJOR ASSEMBLY	VERTICAL STABILIZER RADIO EQUIPMENT		
	PART NUMBER	1234567 NOMENCLATURE		
291 -	170-71011	RADIO EQUIP. INSTL - VERTICAL STABILIZER (SEE SECTION 2)		NP
	151-71044-20	.CABLE ASSY - RADIO VHF COAXIAL		1
- 1	151-71044-21	..CABLE - RADIO VHF COAXIAL		1
- 2	UG21/U	..PLUG - (G.F.E.)		1
- 3	UG23/U	..PLUG - (G.F.E.) (INTCHG WITH UG238/U)		1
- 4	46-238	.CLAMP - (APC) (CABLE)	663-	1
		OR		
	10H-1774	.CLAMP - CABLE (BRITISH)	663-	
		OR		
	M-297	.CLAMP - CABLE (SIGNAL CORPS)	663-	
- 5	AN742D9C	.CLAMP -		2
	AN507-632R7	.SCREW -		2
	AN365-632	.NUT -		2
- 6	A3044SF-4	.CLAMP - HARNESS (TIN)		3
	AN507-632R7	.SCREW -		3
	AN365-632	.NUT -		3
- 7	AN931-9-13	.GROMMET -		1
- 8	A3044SF-4	.CLAMP - HARNESS (TIN)		1
	AN515-8R8	.SCREW -		1
	AN365-832	.NUT -		1
- 9	AN931-10-14	.GROMMET -		2
-10	2C12-2	.CLIP - (NAA)		1
	A3044SF-4	.CLAMP - HARNESS (TIN)		1
	AN507-632R7	.SCREW -		1
	AN365-832	.NUT -		1
-11	AN735D12	.CLAMP -		1
	AN500A8-6	.SCREW -		1
	AN365-832	.NUT -		1
	151-71012-802	ANTENNA ASSY - RADIO VHF-IFF COMB. (SEE SECTION 2) (AS PER EO 05-5E-6A/198)		1
-12	13B-52018	.CHANNEL ASSY - VHF-IFF COMBINATION (AS PER EO 05-5E-6A/198)		1
-13	UG-58/U	.RECEPTACLE - (APC)		1
		OR		
	CQA49470	.SOCKET -		
	AN515-4R5	.SCREW - (RECEPTACLE TO CHANNEL ATTACHING)		3
	AN500A4-5	.SCREW -		1
	AN365-440	.NUT -		4
-14	151-71014-954	.PLATE - RADIO VHF-IFF COMBINATION (AS PER EO 05-5E-6A/198)		2
-15	AN515-6R7	.SCREW -		10
	AN960-6	.WASHER -		10
	AN365-632	.NUT -		10
-16	151-71100	.STRAP ASSY - RADIO VHF-IFF COMB. ANTENNA		2
	AN960-6	.WASHER -		2
	151-71013	.CAP ASSY - VHF-IFF COMBINATION ANTENNA		1
-17	151-71013-9	..WELD ASSY - COMBINATION ANTENNA CAP SKIN		1
-18	151-71013-8	..CHANNEL ASSY - COMBINATION ANTENNA CAP		1
-19	AN515-6R6	..SCREW -		16
	AN365-632	..NUT -		16
-20	AN515-6R7	.SCREW - (PLATE TO CAP ATTACHING)		8

FIGURE AND INDEX NUMBER	GROUP RADIO EQUIPMENT MAJOR ASSEMBLY VERTICAL STABILIZER RADIO EQUIPMENT PART NUMBER	1234567 NOMENCLATURE	CODE	UNITS PER ASSY
291 - -21	AN365-632 151-71044-4	•NUT - CABLE ASSY - COAXIAL VHF (SEE FIG. 290) -000-		8 REF

SECTION 19

RADAR EQUIPMENT

TABLE OF CONTENTS

FIGURE	TITLE	PAGE
292	AN/APG30 RADAR EQUIPMENT	1202
293	TYPE A-4 GUNSIGHT EQUIPMENT	1208
293A	FUSELAGE STA 53-145 TYPE A-4 GUNSIGHT EQUIPMENT	1214
294	TYPE A-4 GUN-BOMB-ROCKET SIGHT	1218
295	RADAR GUNSIGHT CAMERA EQUIPMENT	1220
296	AN/APX6 RADAR EQUIPMENT	1222

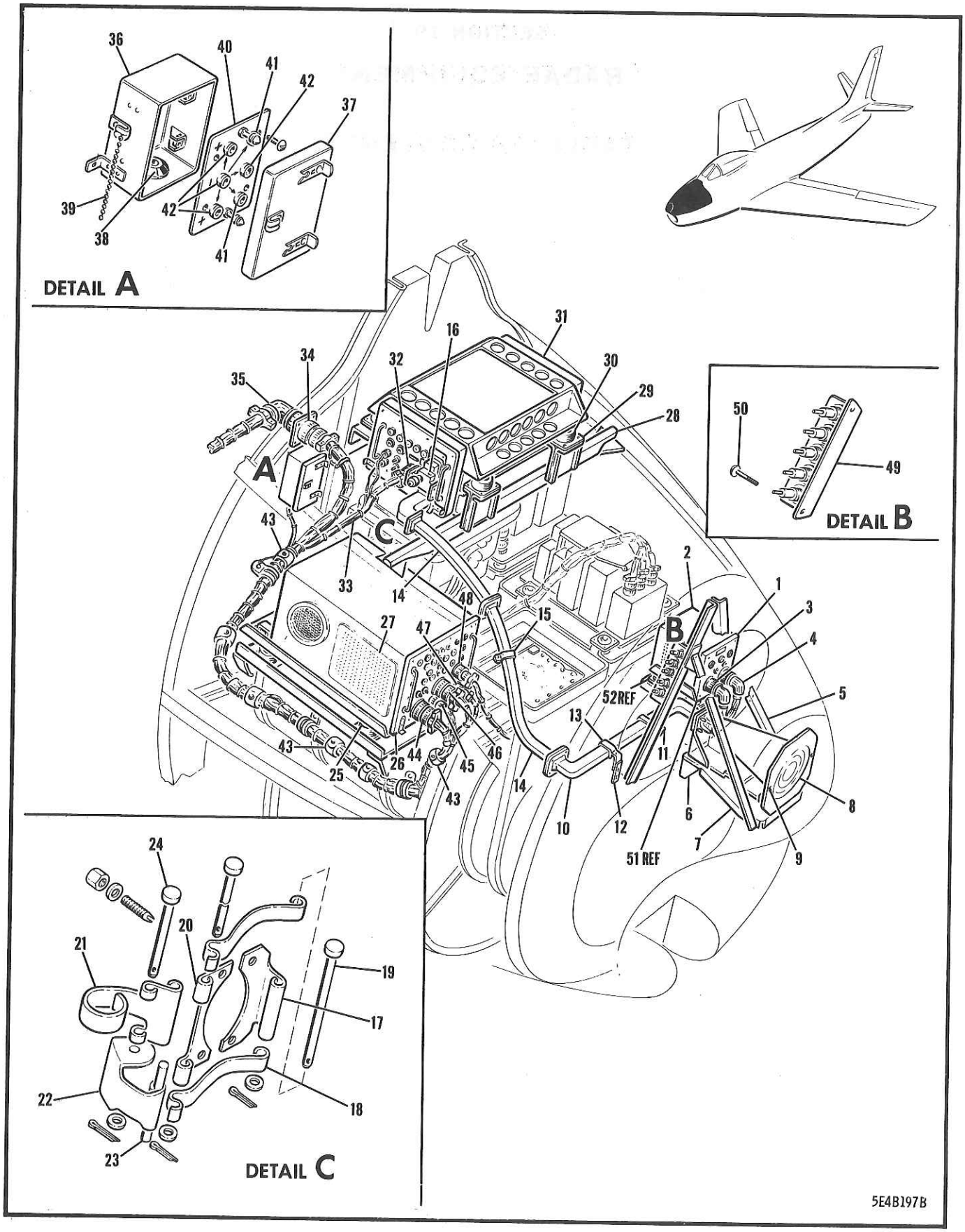

FIGURE 292 AN/APG30 RADAR EQUIPMENT

FIGURE AND INDEX NUMBER	GROUP RADAR EQUIPMENT MAJOR ASSEMBLY AN/APG30 RADAR EQUIPMENT PART NUMBER	1234567 NOMENCLATURE	CODE	UNITS PER ASSY
292 -	172-74031	RADAR EQUIP. INSTL - TYPE A-4 GUNSIGHT & AN/APG30 RADAR RANGE (SEE SECTION 3)		NP
- 1	MT-708/APG-30	.MOUNT - VOLTAGE REGULATOR (G.F.E.)		1
- 2	CN-112/APG-30	.REGULATOR - VOLTAGE (G.F.E.) (REMOVED ON SABRE 5A, FOR BALLAST SEE FIG. 297)		1
	AN515-8R10	.SCREW -		8
	AN3057-12A	.ADAPTER -		1
- 3	AN3108B20-15S	.CONNECTOR -		1
	AN3057-12A	.ADAPTER -		1
- 4	AN3108B20-18P	.CONNECTOR -		1
	144-54071-10	.COVER ASSY - ELECTRICAL CONNECTOR PLUG		2
	AN742D8CB	.CLAMP -		1
	AN515-8R6	.SCREW -		1
	AN365-832	.NUT -		1
	AN742D7CB	.CLAMP -	001-100	1
	AN742D8CB	.CLAMP -	101-	1
	AN742D6C	.CLAMP -		1
	AN515-8R8	.SCREW -		1
	AN365-832	.NUT -		1
	AN520-10R8	.SCREW -		1
	AN365-1032	.NUT -		1
	1J1-1A-2-4	.JUMPER - WIRE (NAA)	101-	1
	AN515-6R7	.SCREW -	101-	1
	AN365-632	.NUT -	101-	1
- 5	170-74021-1	.SUPPORT ASSY - RADAR ANTENNA LH		1
	170-74021-2	.SUPPORT ASSY - RADAR ANTENNA RH		1
- 6	170-74023	.SUPPORT ASSY - RADAR ANTENNA (BASE)		1
	AN3-6A	.BOLT -		2
	AN3-4A	.BOLT -		8
	AN960-10L	.WASHER -		2
	AN365-832	.NUT -		4
- 7	170-74049	.MOUNT ASSY - RADAR ANTENNA AB-171/APG-30		1
- 8	AT-223/APG-30	.ANTENNA - RADAR RANGING (G.F.E.)	001-370	1
	AT-561/APG	.ANTENNA - RADAR RANGING (G.F.E.) (AS PER EO 05-5E-6A/126)	371-	1
	AN515-4R8	.SCREW -	522-	2
	AN515-8R16	.SCREW -		2
	AN515-8R18	.SCREW -		2
	4S3-D8-10	.SPACER - BOLT (NAA)		4
	AN960D10L	.WASHER -		2
	2W1-11-10-40	.WASHER - PLAIN (NAA)		8
- 9	22NM82	.NUT - (ESN) (HEXAGON LIGHT)		2
	22NM40	.NUT - (ESN) (HEXAGON LIGHT)		2
-10	LC19288	.WAVEGUIDE ASSY - RIGID (ATI)	001-370	1
	60418	.WAVEGUIDE - (ATI) (RIGID) (AS PER EO 05-5E-6A/126)	371-	1
-11	172-74048	.BRACKET - AN/APG30 RADAR WAVEGUIDE CLAMP		1
	170-74020	.CLAMP - AN/APG30 RADAR RIGID WAVEGUIDE		1
	170-74019	.INSULATOR - AN/APG30 RADAR WAVEGUIDE CLAMP		1
	AN515-8R7	.SCREW -		3
	AN960D8	.WASHER -		3
	AN365-832	.NUT -	001-300	3
	AN365-832	.NUT -	301-	1
-12	170-74045	.BRACKET ASSY - AN/APG30 RADAR RIGID WVG		1
	170-74019	.INSULATOR - AN/APG30 RADAR WAVEGUIDE CLAMP		1
-13	170-74020	.CLAMP - AN/APG30 RADAR RIGID WAVEGUIDE		1
	AN515-8R8	.SCREW -		2
	AN515-8R7	.SCREW -		1
	AN960D8	.WASHER -		3
	AN365-832	.NUT -		1

FIGURE AND INDEX NUMBER	GROUP / MAJOR ASSEMBLY / PART NUMBER	RADAR EQUIPMENT / AN/APG30 RADAR EQUIPMENT / 1234567 NOMENCLATURE	CODE	UNITS PER ASSY
292 -14	CG-801/U(2-0)	•WAVEGUIDE - (ATI) (FLEXIBLE) (REMOVE ON SABRE 5A• FOR BALLAST SEE FIG• 297)	001-370	1
	34094	•WAVEGUIDE - (ATI) (FLEXIBLE) (AS PER EO 05-5E-6A/126)	371-	1
	AN515-8R7	•SCREW -		4
	AN936A8	•WASHER -		4
	LA17491	•GASKET - CHOKE (ATI)	001-370	3
	LA17491	•GASKET - CHOKE (ATI) (AS PER EO 05-5E-6A/126)	371-	4
-15	161-74109	•CLAMP - AN/APG30 RADAR FLEXIBLE WAVEGUIDE OR		1
	AC10004	•CLAMP - AN/APG-30 RADAR FLEX• WAVEGUIDE (ATI) (AS PER EO 05-5E-6A/257)		
	170-74019	•INSULATOR - AN/APG30 RADAR WAVEGUIDE CLAMP		1
	NAS43DD-3-32	•SPACER -		1
	AN8013D1	•WASHER -		1
	AN509-8R22	•SCREW -		1
	AN515-8R7	•SCREW -		1
	AN960D8	•WASHER -		1
	AN365-832	•NUT -		1
-16	LC19287	•COUPLER - UNIDIRECTIONAL (ATI) (REMOVED ON SABRE 5A• FOR BALLAST SEE FIG• 297)	001-370	1
	60417	•WAVEGUIDE - (ATI) (RIGID) (AS PER EO 05-5E-6A/126)	371-	1
	AN515-8R7	•SCREW -	001-370	4
	AN515-8R9	•SCREW - (AS PER EO 05-5E-6A/126)	371-	4
	AN936A8	•WASHER -		4
	170-74062	•HINGE ASSY - AN/APG30 RADAR WVG DISCONNECT		1
-17	170-74058	••HINGE - AN/APG30 RADAR WAVEGUIDE DISC•		1
-18	170-74059	••SPRING - AN/APG30 RADAR WAVEGUIDE DISC•		2
-19	AN392-55	••PIN -		1
	AN960-4L	••WASHER -		1
	AN380-2-2	••COTTER-PIN -		1
	170-74081	•LATCH ASSY - AN/APG30 RADAR WVG DISCONNECT		1
-20	170-74056	••BRACKET - AN/APG30 RADAR WAVEGUIDE DISCONNECT SNAP-RING		1
-21	170-74083	••LATCH - AN/APG30 RADAR WAVEGUIDE DISC•		1
	170-74082	••HOOK ASSY - AN/APG30 RADAR WVG DISCONNECT		1
-22	170-74082-3	•••HOOK - WAVEGUIDE DISCONNECT		1
-23	170-74082-5	•••PIN - WAVEGUIDE DISCONNECT		1
	AN960-4L	••WASHER -		2
	AN392-55	••PIN -		1
-24	AN392-31	••PIN -		1
	AN380-2-2	••COTTER-PIN -		2
	170-74060	•STUD - AN/APG30 RADAR WAVEGUIDE DISCONNECT		4
	170-74084	•NUT - AN/APG30 RADAR WAVEGUIDE DISCONNECT		4
	AN935-8L	•WASHER -		4
-25	170-74032	•SUPPORT ASSY - AN/APG30 RDR/RGE PWR OUTBD		1
	170-74029-950	•SUPPORT ASSY - AN/APG30 RADAR RANGE POWER INBOARD (AS PER EO 05-5E-6A/67)		1
	AN3-4A	•BOLT -		14
	AN960D10	•WASHER - (UNDER BOLT HEAD)		14
	AN960C10L	•WASHER -		8
	AN960C10	•WASHER -		4
-26	MT-739/U	•MOUNT - RANGE POWER (G•F•E•)		1
	AN515-8R10	•SCREW -		15
	AN515-8R10	•SCREW -	001-236	1
	AN515-10R8	•SCREW -	237-	1
	AN960-10L	•WASHER -		1
	AN365-1032	•NUT -		1
	AN742D34C	•CLAMP - (AS PER EO 05-5E-6A/67)	001-236	1
	MS21919DG30	•CLAMP - AIRCRAFT LOOP TYPE SUP• CUSHIONED	237-	1
-27	PP-493/APG-30	•POWER-UNIT - RANGE (G•F•E•) (REMOVED ON SABRE 5A• FOR BALLAST SEE FIG• 297)	001-525	1

FIGURE AND INDEX NUMBER	GROUP RADAR EQUIPMENT MAJOR ASSEMBLY AN/APG30 RADAR EQUIPMENT PART NUMBER	1234567 NOMENCLATURE	CODE	UNITS PER ASSY
292 -	PP-5041/APG-501	•POWER-UNIT - RANGE (G•F•E•)	526-	1
-28	170-74085-100	•CHANNEL ASSY - AN/APG30 RADAR XMTR SUPPORT	A44	1
	170-74085-800	•CHANNEL ASSY - AN/APG30 RADAR XMTR SUPPORT	301-490	1
	170-74085-25	••CHANNEL ASSY - AN/APG30 RADAR XMTR SUP•	A44-	1
	170-74085-125	••CHANNEL ASSY - AN/APG30 RADAR XMTR SUP•	301-490	1
	170-74085-17	••BRACKET ASSY - RADAR TRANSMITTER SUPPORT		1
	AN4-6A	••BOLT - (BRACKET TO CHANNEL ATTACHING)		8
	170-74085-27	••BRACKET ASSY - RADAR TRANSMITTER SUPPORT		1
	170-74085-21	••WASHER - RADAR TRANSMITTER SUPPORT		8
-29	172-74021-1	•PLATE ASSY - AN/APG30 RADAR XMTR SUPPORT		1
	172-74021-13	•PLATE ASSY - AN/APG30 RADAR XMTR SUPPORT		1
	AN509-8R8	•SCREW -		4
	AN515-8R10	•SCREW -		4
	AN365-832	•NUT -		4
-30	MT-709/APG-30	•MOUNT - TRANSMITTER (G•F•E•)	001-596	1
	MT-5004/APG-501	•MOUNT - TRANSMITTER (G•F•E•)	597-	1
-31	RT-181/APG-30	•TRANSMITTER - RADAR (G•F•E•) (REMOVED ON SABRE 5A• FOR BALLAST SEE FIG• 297)	001-370	1
	RT-5005/APG-501	•TRANSMITTER - RADAR (G•F•E•) (AS PER EO 05-5E-6A/126)	371-	1
	AN4-13A	•BOLT -		2
	AN4-6A	•BOLT -		2
	AN960C416L	•WASHER -		4
	144-54071	•COVER ASSY - ELECTRICAL CONNECTOR PLUG		1
	AN3057-20A	•ADAPTER -		1
-32	AN3106B32-13S	•CONNECTOR -		1
-33	170-74013	•CABLE ASSY - AN/APG30 RANGE POWER TO XMTR		2
	UG-260A/U	••PLUG - CABLE CONNECTOR (APC)		2
	170-74013-3	••CABLE - AN/APG30 RANGE PWR TO TRANSMITTER		1
	AN742D11CB	•CLAMP -		1
	AN515-8R6	•SCREW -		1
	AN365-832	•NUT -		1
	AN3057-16A	•ADAPTER -		2
	4G3-24	•GASKET - RADIO PRESSURE PLUG (NAA)		1
-34	AN3100C24-28P	•CONNECTOR -		1
-35	AN3108B24-28S	•CONNECTOR -		1
	AN515-6R8	•SCREW -		4
	AN365-632	•NUT -		4
	151-74081	•BOX ASSY - RADAR & GUNSIGHT VOLTAGE CHECK JUNCTION		1
-36	151-74081-3	••BOX - RADAR & GUNSIGHT VOLTAGE CHECK JCT		1
-37	151-74108	••COVER ASSY - RADAR & GUNSIGHT VLG TEST JB		1
-38	AN931-7-11	••GROMMET -		1
-39	151-74081-5	••CHAIN - (MAKE FROM 9C1-1-5)		1
	151-74083	•PANEL ASSY - RADAR & GUNSIGHT VOLTAGE TEST		1
-40	151-74083-3	••PANEL - RADAR & GUNSIGHT VOLTAGE TEST		1
	AN3199-4	••STUD -		2
	AN340-8	••NUT -		4
	2W1AL18-16-32	••WASHER - PLAIN (NAA)		6
-41	1861	••JACK - PHONE - RED (ARH)		2
-42	1861	••JACK - PHONE (BLACK) (ARH)		4
	AN515-8R7	•SCREW -		5
	AN515-8R10	•SCREW -		2
	AN742D8C	•CLAMP -		1
	AN960D10	•WASHER -	001-100	3
	2W1AL12-18-64	•WASHER - PLAIN (NAA)	101-	2
	AN365-832	•NUT -		1
-43	295006	•STRAP - (UCF)		8
	TA710-8	•CLAMP - ELECTRICAL HARNESS (TAI)	101-	1
		OR		
	AN742D10C	•CLAMP -		

FIGURE AND INDEX NUMBER	GROUP RADAR EQUIPMENT MAJOR ASSEMBLY AN/APG30 RADAR EQUIPMENT PART NUMBER	1234567 NOMENCLATURE	CODE	UNITS PER ASSY
292 -44	AN3108B32-13P	•CONNECTOR -	001-100	1
	AN3106B32-13P	•CONNECTOR -	101-	1
	AN3054-20A	•NUT -	001-100	1
	AN3054-20	•NUT -	101-	1
	144-54071	•COVER ASSY - ELECTRICAL CONNECTOR PLUG		1
	AN742D11CB	•CLAMP -		1
	AN515-8R6	•SCREW -		1
	2W1C80-54-015	•WASHER - PLAIN (NAA)		2
	2W1R-48-56-125	•WASHER - PLAIN (NAA)	101-	1
	AN365-832	•NUT -		1
	AN3057-6A	•ADAPTER -		1
-45	AN3106B14S2P	•CONNECTOR -		1
	144-54071-10	•COVER ASSY - ELECTRICAL CONNECTOR PLUG		1
	AN742D4CB	•CLAMP -		1
	AN515-8R6	•SCREW -		1
	AN365-832	•NUT -		1
	AN3057-16A	•ADAPTER -		1
-46	AN3106B28-17P	•CONNECTOR -		1
	144-54071	•COVER ASSY - ELECTRICAL CONNECTOR PLUG		1
	AN742D5CB	•CLAMP -		1
	AN515-8R6	•SCREW -		1
	AN365-832	•NUT -		1
	AN3057-12A	•ADAPTER -		1
-47	AN3106B20-27P	•CONNECTOR -		1
	144-54071-10	•COVER ASSY - ELECTRICAL CONNECTOR PLUG		1
	AN742D7CB	•CLAMP -		1
	AN515-8R6	•SCREW -		1
	AN365-832	•NUT -		1
-48	AN3106B20-18S	•CONNECTOR -		1
	AN3057-12A	•ADAPTER -		1
	144-54071-10	•COVER ASSY - ELECTRICAL CONNECTOR PLUG		1
	AN742D8CB	•CLAMP -		1
	AN515-8R6	•SCREW -		1
	AN365-832	•NUT -		1
-49	172-74049	•PANEL ASSY - RADAR COMPT FUSE & CKT/BKR		1
	172-74049-3	••PANEL - RADAR COMPARTMENT FUSE HOLDER		1
	HKP	••HOLDER - PANEL MOUNTED FUSE (BUS)		5
	AGC-5	••FUSE - GLASS TUBE (BUS)		2
	AGC-2	••FUSE - GLASS TUBE (BUS)		2
-50	AN515-8R7	•SCREW -		2
	AN960D8	•WASHER -		2
-51	170-74024	SUPPORT ASSY - VOLTAGE RGLR FUS STA 21 (SEE SECTION 3)		REF
-52	170-74025	SUPPORT ASSY - VOLTAGE RGLR FUS STA 27 (SEE SECTION 3)		REF
		(CONTINUED SEE FIG. 293)		

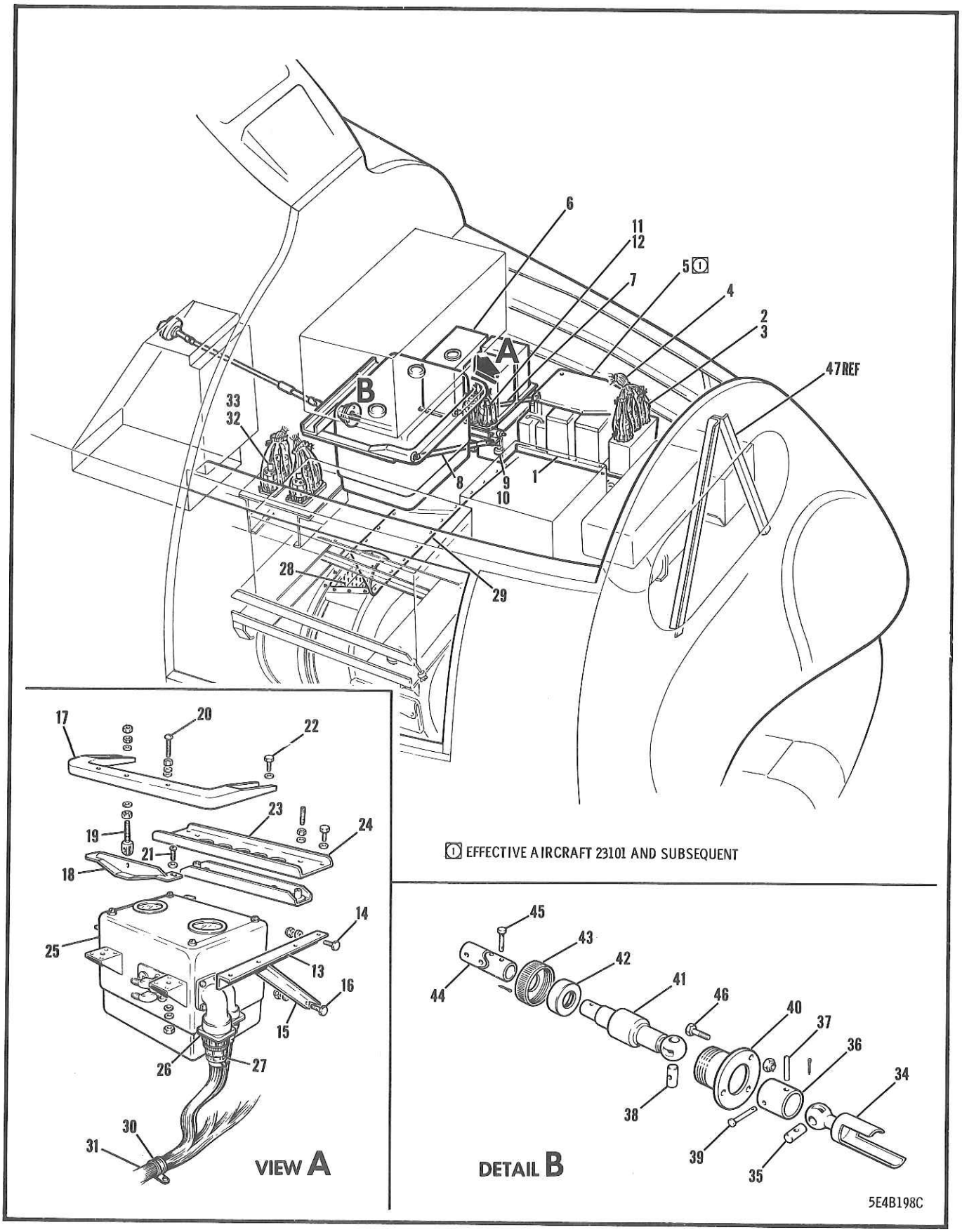

FIGURE 293 TYPE A-4 GUNSIGHT EQUIPMENT

FIGURE AND INDEX NUMBER	GROUP / MAJOR ASSEMBLY / PART NUMBER	RADAR EQUIPMENT / TYPE A-4 GUNSIGHT EQUIPMENT / 1234567 NOMENCLATURE	CODE	UNITS PER ASSY
293 -	172-74031	RADAR EQUIPMENT INSTL - A-4 GUNSIGHT & AN/APG30 RADAR RANGE (SEE FIG. 292)		REF
- 1	667502	•AMPLIFIER - A-4 GUNSIGHT (G.F.E.) (REMOVED ON SABRE 5A FOR BALLAST SEE FIG.297)		1
	AN8013D1	•WASHER -		4
	AN515-8R14	•SCREW -		4
	AN3057-16A	•ADAPTER -		1
	AN3057-24A	•ADAPTER -		2
- 2	AN3106B24-28P	•CONNECTOR -		1
	AN3106B36-8P	•CONNECTOR -		1
	AN3106B36-8S	•CONNECTOR -		1
- 3	144-54071	•COVER ASSY - ELECTRICAL CONNECTOR PLUG		3
	AN932-2	•PLUG -	620-	2
- 4	AN742D7CB	•CLAMP -		1
	AN742D10CB	•CLAMP -		1
	AN515-8R6	•SCREW -		2
	AN365-832	•NUT -		2
- 5	191-74010	•PLATE - GUN-BOMB-ROCKET SIGHT RANGE SERVO WIRE HARNESS CLAMPING	101-	2
	AN742D4	•CLAMP -	101-	2
	AN515-6R9	•SCREW -	101-	2
	AN515-6R8	•SCREW -	101-	2
	AN960D6L	•WASHER -	101-	4
	AN960D10	•WASHER -	101-	4
	AN364-632	•NUT -	101-	4
- 6	104451	•RANGE SERVO - GUN-BOMB-ROCKET SIGHT TYPE RS311 (G.F.E.) (REMOVED ON SABRE 5A FOR BALLAST SEE FIG. 297)	001-370	1
	104451	•RANGE SERVO - (KET) (GBR/SIGHT TYPE RS311)	371-	1
	AN515-8R10	•SCREW -	101-	2
	AN365-832	•NUT -	101-	2
- 7	170-74039	•TUBE ASSY - RADAR RANGE SERVO DIAGL OUTBD		1
- 8	170-74040	•TUBE ASSY - RS105 RANGE SERVO DIAGL INBD		1
	AN3-6A	•BOLT -		2
	AN3-5A	•BOLT -		4
	NAS43C-4-15	•SPACER -		2
	AN365-1032	•NUT -		2
- 9	13B-52033	•JACK ASSY - RADAR RANGE SERVO DUMMY FUSE (AS PER EO 05-5E-6A/247)		1
-10	AN3057-16A	•ADAPTER -		1
	AN3057-12A	•ADAPTER -		1
-11	AN3106B24-28S	•CONNECTOR -		1
	AN3106B22-19S	•CONNECTOR -		1
-12	172-74037	•COVER ASSY - ELECTRICAL CONNECTOR PLUG		2
	AN742D5CB	•CLAMP -		1
	AN742D6CB	•CLAMP -		1
	AN515-8R6	•SCREW -		2
	AN365-832	•NUT -		2
	AN515-6R7	•SCREW -		1
-13	157-74024-1	•SUPPORT ASSY - GBR/SIGHT COMPUTER HOR LH	001-300	1
	191-74028-1	•SUPPORT ASSY - A-4 GBR/SIGHT COMPUTER LH	301-	1
	157-74024-2	•SUPPORT ASSY - GBR/SIGHT COMPUTER HOR RH	001-300	1
	191-74028-2	•SUPPORT ASSY - A-4 GBR/SIGHT COMPUTER RH	301-	1
-14	AN3-3A	•BOLT -	001-300	2
	AN3-5A	•BOLT -	301-	2
	AN3-6A	•BOLT -	301-	4
	AN960D10	•WASHER -	301-	2
	AN960D10L	•WASHER -	301-	4
	AN364-1032	•NUT -	301-	4
	AN365-1032	•NUT -		2
-15	170-74026-1	•BRACE - GBR/SIGHT COMPUTER DIAGONAL LH	001-300	1

FIGURE AND INDEX NUMBER	GROUP RADAR EQUIPMENT MAJOR ASSEMBLY TYPE A-4 GUNSIGHT EQUIPMENT PART NUMBER	1234567 NOMENCLATURE	CODE	UNITS PER ASSY
293 -	191-74027-1	•BRACE - A-4 GBR/SIGHT COMPUTER DIAGONAL LH	301-	1
	170-74026-2	•BRACE - GBR/SIGHT COMPUTER DIAGONAL RH	001-300	1
	191-74027-2	•BRACE - A-4 GBR/SIGHT COMPUTER DIAGONAL RH	301-	1
-16	AN3-3A	•BOLT -	001-300	2
	AN3-5A	•BOLT -	301-	2
	AN960C10	•WASHER -	001-300	4
	AN960D10	•WASHER -	301-	2
	AN365-1032	•NUT -	001-300	4
	AN365-1032	•NUT -	301-	2
	157-74010	•LEVELLING ASSY - A-1B G/SGT COMPUTER FWD	001-300	1
-17	157-74013	••BRACKET ASSY - GBR/SIGHT COMPUTER MTG	001-300	1
-18	157-74017	••BEAM - A-1B GUNSIGHT COMPUTER LEVELLING	001-300	1
-19	157-74018	••FORK - GUN-BOMB-ROCKET SIGHT COMPUTER LEV	001-300	1
	AN3-6A	••BOLT -	001-300	1
	AN365-1032	••NUT -	001-300	1
	AN960-416L	••WASHER -	001-300	2
	AN316-4R	••NUT -	001-300	3
	AN936A10	••WASHER -	001-300	2
	AN960D10	••WASHER -	001-300	2
	AN315-3	••NUT -	001-300	2
-20	NAS428-3-22	••BOLT -	001-300	2
-21	AN515-8R16	•SCREW -	001-300	2
	AN8013D1	•WASHER -	001-300	4
	4S3D10-7	•SPACER - BOLT (NAA)	001-300	AR
	AN960D8	•WASHER -	001-300	6
	AN365-832	•NUT -	001-300	2
-22	AN3-4A	•BOLT -	001-300	4
	AN960-10L	•WASHER -	001-300	4
	187-74065	•RING ASSY - A-4 GBR/SIGHT COMPUTER MTG	301-	1
	187-74065-3	••RING - A-4 GBR/SIGHT COMPUTER MOUNTING	301-	1
	AN3-13A	•BOLT -	301-	8
	AN960D10	•WASHER -	301-	8
	157-74011	•LEVELLING ASSY - A-1B G/SGT COMPUTER REAR	001-300	1
-23	157-74012	••PLATE ASSY - GBR/SIGHT COMPUTER MOUNTING	001-300	1
-24	157-74019	••CHANNEL ASSY - A-1B GUNSIGHT COMPUTER MTG	001-300	1
	157-74020	••STUD - GUN-BOMB-ROCKET SIGHT COMPUTER LEV	001-300	2
	AN960-416L	••WASHER -	001-300	2
	AN316-4R	••NUT -	001-300	2
	AN515-8R16	•SCREW -	001-300	2
	AN3-4A	•BOLT -	001-300	4
	AN960D8	•WASHER -	001-300	4
	AN960-10L	•WASHER -	001-300	4
	AN8013D1	•WASHER -	001-300	4
	4S3-D10-7	•SPACER - BOLT (NAA)	001-300	AR
-25	667494	•COMPUTER - GUNSIGHT (G.F.E.) (REMOVED ON SABRE 5A FOR BALLAST SEE FIG. 297)	001-300	1
	187-74066	•COMPUTER ASSY - A-4 GUNSIGHT (REWORK) (REMOVED ON SABRE 5A FOR BALLAST SEE FIG. 297)	301-	1
	K1401	••SHOCK-MOUNT - (RAI)	301-	4
	667494	••COMPUTER - A-4 GUNSIGHT (G.F.E.)	301-	1
	AN3057-6A	•ADAPTER -		1
-26	AN3106B24-28S	•CONNECTOR -		1
	AN3106B14S5P	•CONNECTOR -		1
	2W1R-36-44-120	•WASHER - PLAIN (NAA)	568-	1
	2W1C-64-44-015	•WASHER - PLAIN (NAA)	568-	1
-27	AN3057-16A	•ADAPTER -	001-567	1
	AN3054-16	•NUT -	568-	1
	AN742D7CB	•CLAMP -		1
	AN515-8R6	•SCREW -		1

FIGURE AND INDEX NUMBER	GROUP RADAR EQUIPMENT MAJOR ASSEMBLY TYPE A-4 GUNSIGHT EQUIPMENT PART NUMBER	1234567 NOMENCLATURE	CODE	UNITS PER ASSY
293 -	AN365-832	•NUT -		1
-28	151-74053	•PANEL ASSY - RADAR NOSE TERMINAL		2
	151-74053-3	••PANEL - RADAR NOSE TERMINAL		1
	NAS45-6-13	••TERMINAL BLOCK ASSY - ELECTRICAL		3
	AN515-4R6	••SCREW -		6
	AN365-440	••NUT -		6
-29	170-74069	•COVER ASSY - AN/APG30 RADAR NOSE TERM• PNL		1
	295202-16A	•GROMMET - (UCF) (PLASTIC)		6
	AN515-8R7	•SCREW -		8
	AN960D8	•WASHER -		4
	AN936A6	•WASHER -		78
	AN960-6	•WASHER -		78
	AN340-6	•NUT -		78
-30	755-12-2-6	•CLIP - INTEGRALLY BONDED SUPPORT (ADE)		1
	755-8-2-6	•CLIP - INTEGRALLY BONDED SUPPORT (ADE)		1
	1J1-1A-2-10	•JUMPER - WIRE (NAA)		2
	AN515-6R6	•SCREW -		2
	AN365-632	•NUT -		2
-31	SPEC AMS-3208	•EXTRUSION - RUBBER (282 X 6-1/2)		1
	SPEC AMS-3208	•EXTRUSION - RUBBER (282 X 5-5/8)		1
	AN515-8R7	•SCREW -		8
	AN365-832	•NUT -		8
	AN3057-16A	•ADAPTER -		2
	AN3100M28-12S	•CONNECTOR -		2
-32	AN3106M28-12P	•CONNECTOR -		2
	AN742D7CB	•CLAMP -	001-100	1
	AN742D12CB	•CLAMP -	101-	1
	AN742D9CB	•CLAMP -		2
	AN515-10R7	•SCREW -		1
	AN515-8R7	•SCREW -		3
	AN365-1032	•NUT -		1
	AN365-832	•NUT -		3
	1J1-2-3-4	•JUMPER - WIRE (NAA)	001-490	1
	1J1-2-3-5	•JUMPER - WIRE (NAA)	001-490	1
	1J1-1A-2-8	•JUMPER - WIRE (NAA)	491-	2
	1J1-2-3-6	•JUMPER - WIRE (NAA)	001-100	1
	1J1-2-3-8	•JUMPER - WIRE (NAA)	101-490	1
-33	144-54071	•COVER ASSY - ELECTRICAL CONNECTOR PLUG		2
	4G3-28	•GASKET - RADIO PRESSURE PLUG (NAA)		2
	2L7-2	•LUG - SAFETY (NAA)		2
	AN515-6R8	•SCREW -		8
	AN365-632	•NUT -		8
	172-74041	•UNIVERSAL ASSY - GUN-BOMB-ROCKET COMPUTER CONTROL (REMOVED ON SABRE 5A FOR BALLAST SEE FIG• 297)		1
-34	176-74046	••HUB - GBR/SIGHT COMPUTER CONTROL SHAFT		1
-35	176-74047	••TRUNNION - GBR/SIGHT COMPUTER CTL SHAFT		1
-36	176-74045	••SLEEVE - GBR/SIGHT COMPUTER CONTROL SHAFT		1
-37	176-74048	••PIN - GBR/SIGHT COMPUTER CONTROL SHAFT		1
-38	176-74047	•TRUNNION - GBR/SIGHT COMPUTER CTL SHAFT		1
-39	172-74040	•PIN - GBR/SIGHT COMPUTER CONTROL SHAFT		1
	AN381-1-6	•COTTER-PIN -		1
	172-74042	•CONTROL ASSY - GUN-BOMB-ROCKET SIGHT COMPUTER WIND SCALE (REMOVED ON SABRE 5A FOR BALLAST SEE FIG• 297)		1
	172-74042-5	••SHAFT - GBR/SIGHT COMPUTER WIND SCALE		2
	172-74042-3	••COLLAR - GBR/SIGHT COMPUTER WIND SCALE		1
-40	157-74041	••HOUSING - A-1B COMPUTER CONTROL SHAFT PRESSURE SEAL		1
-41	172-74039	••SHAFT - GBR/SIGHT COMPUTER UNIVERSAL CTL		1

FIGURE AND INDEX NUMBER	GROUP RADAR EQUIPMENT MAJOR ASSEMBLY TYPE A-4 GUNSIGHT EQUIPMENT PART NUMBER	1234567 NOMENCLATURE	CODE	UNITS PER ASSY
293 -42	14	••CLOSURE - (GPC) (STANDARD)		1
-43	157-74046	••CAP - GUN-BOMB-ROCKET COMPUTER CONTROL SHAFT PRESSURE SEAL		1
-44	AN270B6	••JOINT -		1
-45	AN392-13	••PIN -	001-100	1
	AN380-2-1	••COTTER-PIN -	001-100	1
	AN565D8H3	••SCREW -		4
-46	AN515-8R16	•SCREW -		3
	AN365-832	•NUT -		3
-47	151-31170-7	SUPPORT ASSY - ANTENNA FUSELAGE STA 15 (SEE SECTION 3)		REF
		(CONTINUED SEE FIG. 293A)		

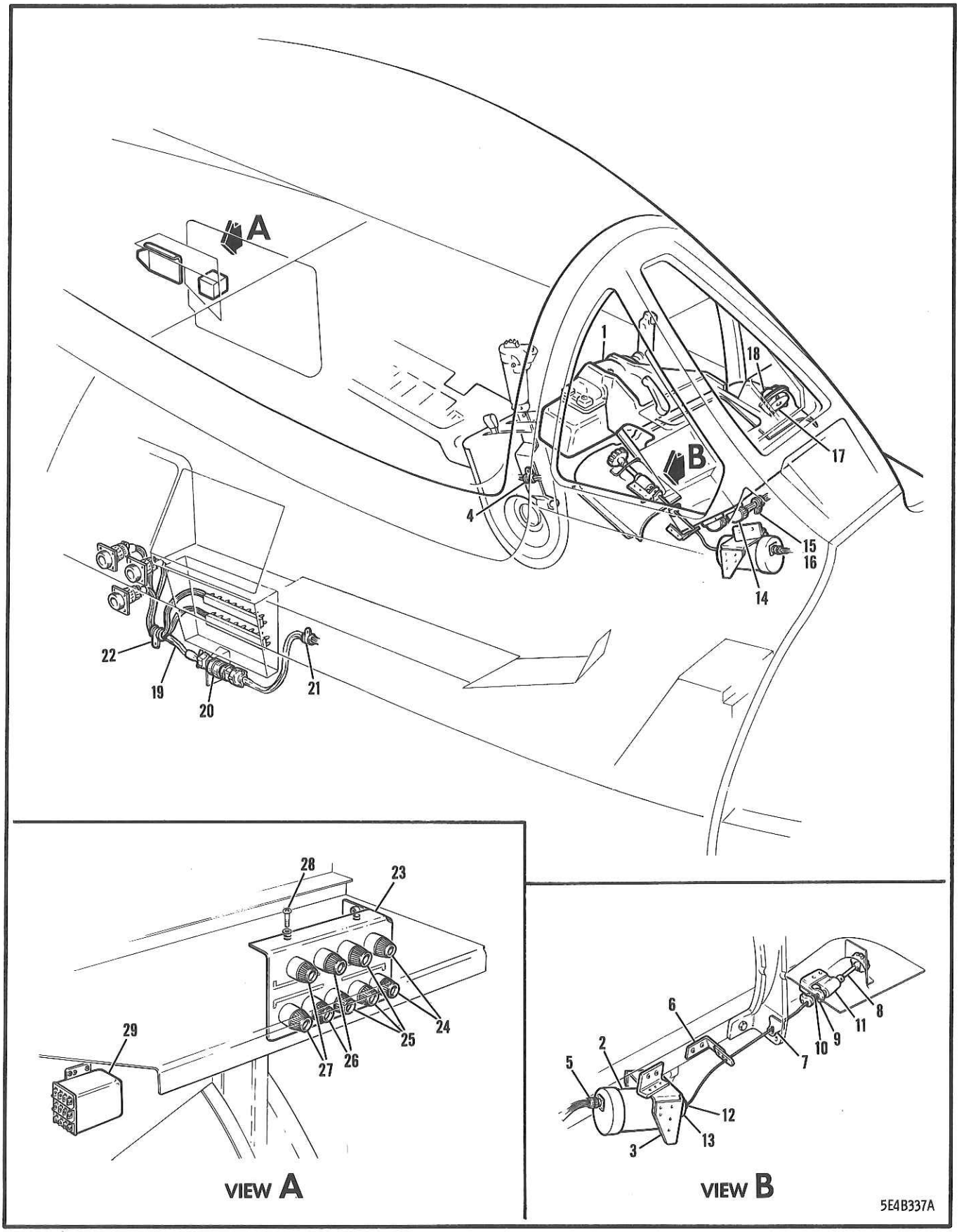

FIGURE 293A FUSELAGE STA 53-145 TYPE A-4 GUNSIGHT EQUIPMENT

FIGURE AND INDEX NUMBER	GROUP RADAR EQUIPMENT MAJOR ASSEMBLY FUSELAGE STA 53-145 TYPE A-4 GUNSIGHT EQUIPMENT PART NUMBER	1234567 NOMENCLATURE	CODE	UNITS PER ASSY
293A-	172-74031	RADAR EQUIPMENT INSTL - A-4 GUNSIGHT & AN/APG30 RADAR RANGE (SEE FIG. 292)		REF
- 1	13B-52010-20	.CAMERA INSTL - A-4 GUN-BOMB-ROCKET SIGHT AN-N6 & AN-N9 (SEE FIG. 295)		REF
- 2	667498	.DIMMER CONTROL - TYPE A-4 GUNSIGHT(G.F.E.)		1
	AN515-8R10	.SCREW - (DIMMER CONTROL SUPPORT ATTACHING)		4
	AN960D8	.WASHER -		4
	AN365-832	.NUT -		4
- 3	172-74045	.SUPPORT ASSY - A-4 GBR/SIGHT DIMMER CTL		1
	AN520-10R10	.SCREW - (DIMMER CTL TO SUPPORT ATTACHING)		2
	AN960D10	.WASHER -		2
	AN935-6	.WASHER -		12
	1J1-1A-2-4	.JUMPER - WIRE (NAA)		1
	1J1-1A-2-6	.JUMPER - WIRE (NAA)		1
- 4	755-2-6	.CLIP - INTEGRALLY BONDED SUPPORT (ADE)		2
	AN515-8R7	.SCREW -		2
	AN365-832	.NUT -		2
	AN3057-4	.ADAPTER -		1
- 5	AN3106B10SL4S	.CONNECTOR -		1
	2L7-2	.LUG - SAFETY (NAA)		1
- 6	172-74051	.SUPPORT ASSY - GBR/SIGHT DIMMER FLEX.SHAFT		1
	AN515-8R10	.SCREW -		2
	AN960D8	.WASHER -		4
	AN365-832	.NUT -		2
- 7	172-74057	.FAIRLEAD - A-4 GUN-BOMB-ROCKET SIGHT DIMMER CONTROL SHAFT		1
- 8	172-74052-10	.SHAFT ASSY - GBR/SIGHT DIMMER CONTROL		1
- 9	170-74064	.COLLET ASSY - GBR/SIGHT DIMMER CONTROL	001-100	2
	170-74064	.COLLET ASSY - GBR/SIGHT DIMMER CONTROL	101-	1
	170-74064-3	..COLLET - GUN-BOMB-ROCKET SIGHT DIMMER CTL		1
	AN565D6H3	..SCREW -		2
-10	170-74065	.SPRING - COMPRESSION		1
	170-74066	.COUPLING ASSY - GBR/SIGHT DIMMER CONTROL		1
	170-74066-3	..COUPLING - GBR/SIGHT DIMMER CONTROL		1
	AN565D6H3	..SCREW -		1
-11	170-74076	.BEARING - GUN-BOMB-ROCKET SIGHT DIMMER CTL		1
	172-74031-950	.SHIM - SIGHT DIMMER CONTROL	001-136	2
	AN515-10R12	.SCREW -	001-136	2
	AN515B8R10	.SCREW -	137-	2
	AN960D8	.WASHER -	001-136	2
	AN960D8	.WASHER -	137-	4
	AN365-832	.NUT -	001-136	2
	AN365B832	.NUT -	137-	2
-12	191-74008	.STOP ASSY - GBR/SIGHT DIMMER CONTROL		1
-13	191-74009	.COLLET ASSY - GBR/SIGHT DIMMER CONTROL		1
	191-74009-3	..COLLET - GUN-BOMB-ROCKET SIGHT DIMMER CTL		1
	AN565D6H3	..SCREW -		2
	AN3057-12A	.ADAPTER -		2
-14	AN3108B22-14S	.CONNECTOR -		1
	AN3108B22-14SW	.CONNECTOR -		1
	2L7-2	.LUG - SAFETY (NAA)		2
-15	AN742D7CB	.CLAMP -		1
	AN742D7CB	.CLAMP -	001-100	1
	AN742D8CB	.CLAMP -	101-	1
-16	AN515-8R7	.SCREW -		1
	AN515-8R8	.SCREW -	001-100	1
	AN515-8R7	.SCREW -	101-	1
	AN365-832	.NUT -		2
	AN960D616	.WASHER -		1
-17	JA7531-FS3056-3	.POTENTIOMETER - (RCC) OR		1
	M9801	.POTENTIOMETER - (CTS)		

FIGURE AND INDEX NUMBER	GROUP RADAR EQUIPMENT MAJOR ASSEMBLY FUSELAGE STA 53-145 TYPE A-4 GUNSIGHT EQUIPMENT PART NUMBER	1234567 NOMENCLATURE	CODE	UNITS PER ASSY
293A-	AN742D5CB	•CLAMP -	001-100	2
	AN515-8R7	•SCREW -	001-100	2
	AN365-832	•NUT -	001-100	2
	1J1-2-2-6	•JUMPER - WIRE (NAA)	001-100	2
-18	AN3220-1	•KNOB -		1
-19	13B-52037-8	•HARNESS ASSY - GUN-BOMB-ROCKET COMPUTER TEST (AS PER EO 05-5E-6A/275)		1
	AN3057-16A	•ADAPTER -		1
-20	AN3100-24-28S	•RECEPTACLE -	001-100	1
	AN3100A24-28S	•RECEPTACLE -	101-	1
	AN515-6R8	•SCREW -		4
	AN365-632	•NUT -		4
-21	755-4-2-6	•CLIP - INTEGRALLY BONDED SUPPORT (ADE)		2
	1J1-1A-2-8	•JUMPER - WIRE (NAA)		2
	AN515-6R6	•SCREW -		2
	AN365-632	•NUT -		2
	1J1-2-3-4	•JUMPER - WIRE (NAA)		2
	1J1-2-2-14	•JUMPER - WIRE (NAA)		2
-22	755-4-2-6	•CLIP - INTEGRALLY BONDED SUPPORT (ADE)		4
	AN515-8R7	•SCREW -		4
	AN365-832	•NUT -		4
	170-74014	•PANEL ASSY - GUN-BOMB-ROCKET SIGHT FUSE		1
-23	170-74014-3	••PANEL - GUN-BOMB-ROCKET SIGHT FUSE		1
	HKP	••HOLDER - PANEL MOUNTED FUSE (BUS)		9
-24	MTH-4	••FUSE - GLASS TUBE (BUS)	001-100	2
	MTH-5	••FUSE - GLASS TUBE (BUS)	101-	2
	EO256773-3	••DECALCOMANIA - (SABRE 5A)	101-	2
-25	AGC-2	••FUSE - GLASS TUBE (BUS)		3
-26	AGC-1/2	••FUSE - GLASS TUBE (BUS)		2
-27	AGC-1/8	••FUSE - GLASS TUBE (BUS)		2
-28	AN515-6R7	•SCREW -		4
-29	AN3312-1	•RELAY - 10-AMP 3PDT SEALED		1
	AN515-8R8	•SCREW -		4

-000-

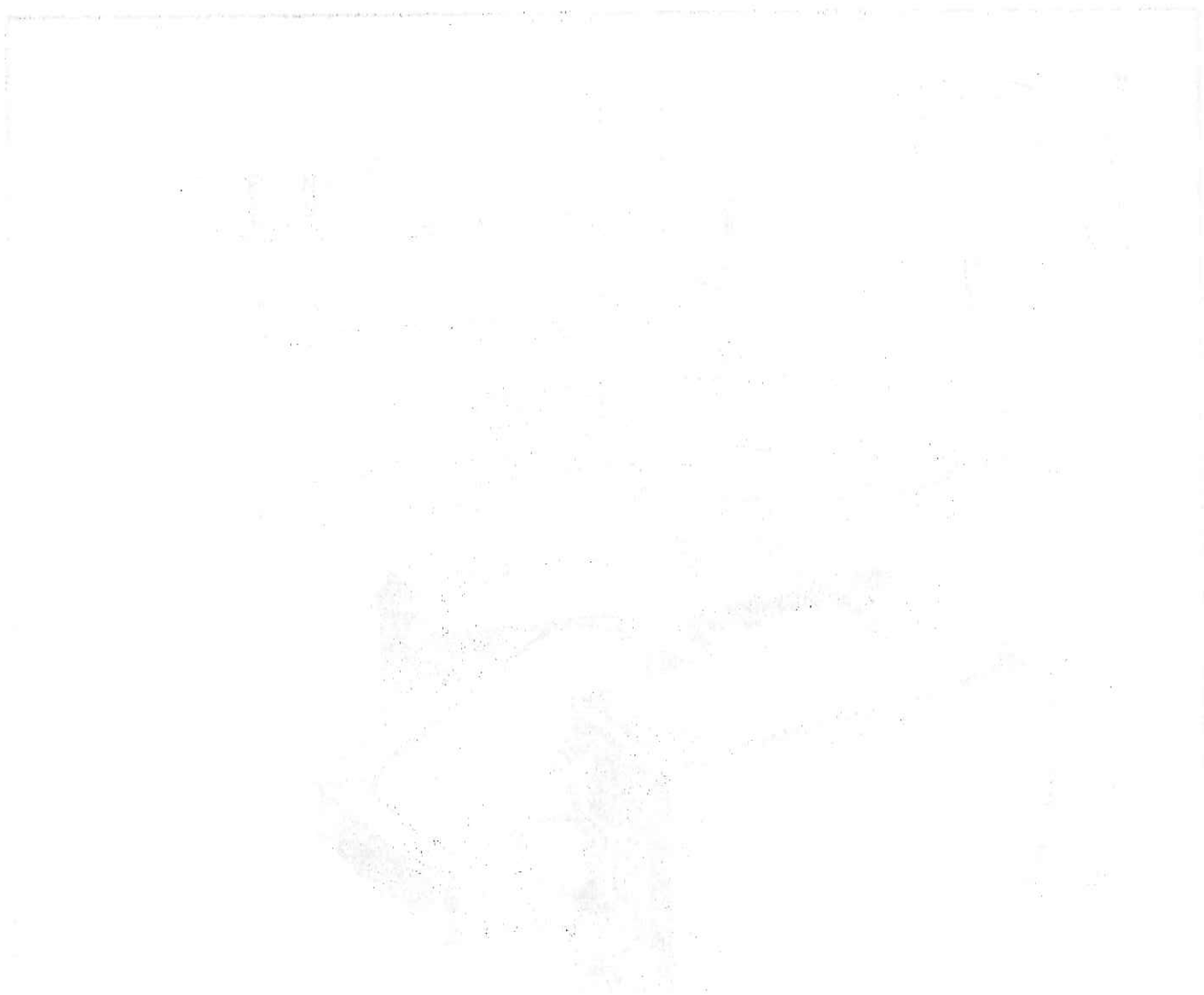

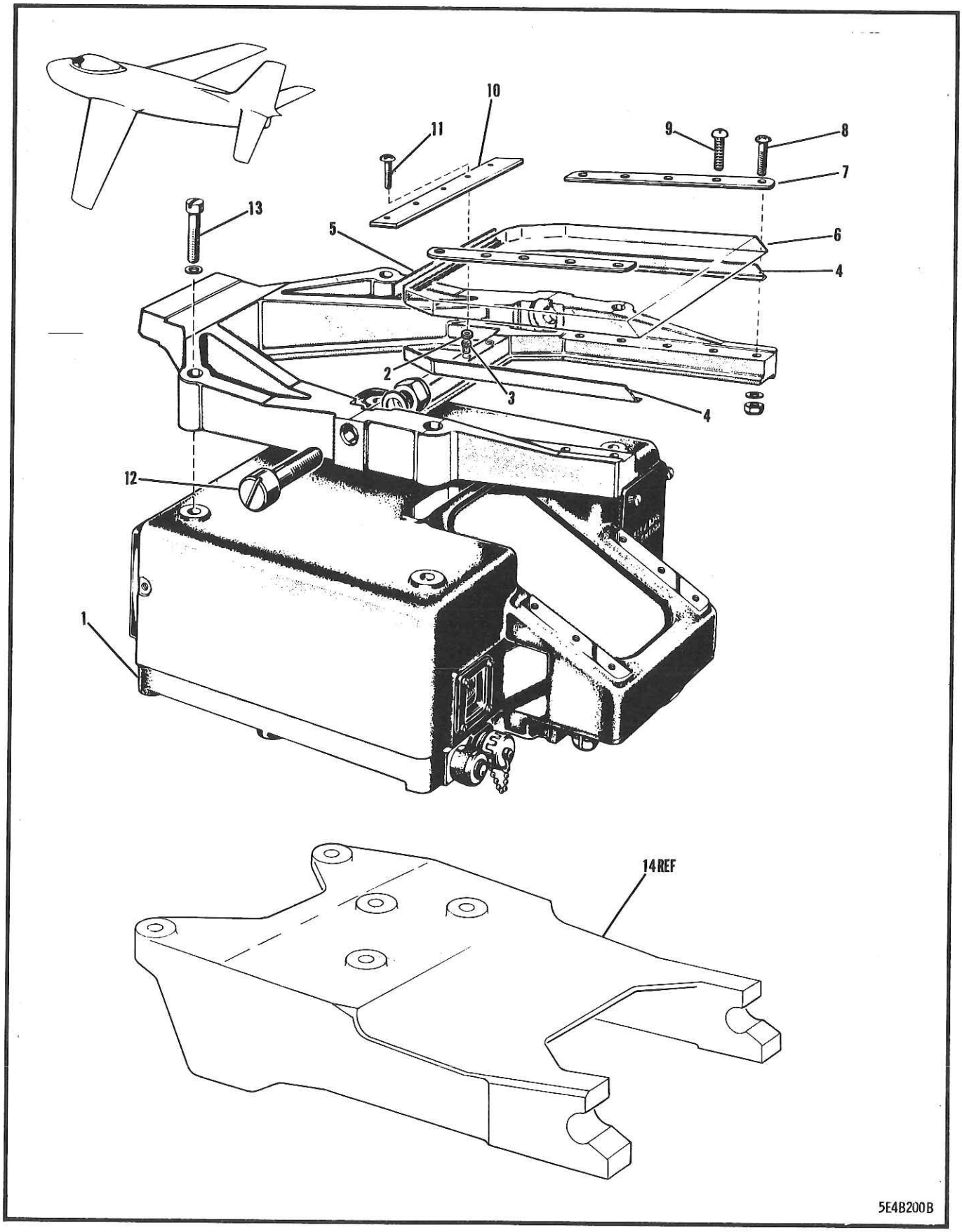

FIGURE 294 TYPE A-4 GUN-BOMB-ROCKET SIGHT

FIGURE AND INDEX NUMBER	GROUP RADAR EQUIPMENT MAJOR ASSEMBLY TYPE A-4 GUN-BOMB-ROCKET SIGHT PART NUMBER	1234567 NOMENCLATURE	CODE	UNITS PER ASSY
294 -	172-69001	SIGHT INSTL - GUN-BOMB-ROCKET TYPE A-4 (SEE FIG. 1)		NP
- 1	667499	.SIGHT HEAD - GUN-BOMB-ROCKET A-4 (G.F.E.)		1
	172-69002	.ADAPTER ASSY - A-4 SIGHT HEAD MOUNTING		1
	172-69007	..FRAME ASSY - A-4 SIGHT HEAD MOUNTING		1
- 2	RL21SB-6	...LOCK-RING - STANDARD (ROS)		5
- 3	RD104SH-5L	...INSERT - LOCKED-IN (ROS)		5
- 4	172-69002-3	..GASKET - A-4 SIGHT HEAD MOUNTING ADAPTER		2
- 5	172-69002-5	..GASKET - A-4 SIGHT HEAD MOUNTING ADAPTER		1
- 6	172-61666	..GLASS - A-4 SIGHT REFLECTOR		1
- 7	172-61667-10	..RETAINER ASSY - A-4 SIGHT LWR REFLECTOR		2
- 8	7S16CN8-16	..SCREW - 100-DEG CORROSION-RESISTANT (NAA)		2
- 9	AN515C8R16	..SCREW -	001-100	8
	7S14CN832-16A	..SCREW - 100-DEG CORROSION-RESISTANT (NAA)	101-	8
	AN960C8	..WASHER -		10
	AN363C832	..NUT -		10
-10	172-61668	..RETAINER ASSY - A-4 SIGHT LOWER REFLECTOR		1
-11	AN515C8R8	..SCREW -	001-100	5
	7S14CN832-8A	..SCREW - 100-DEG CORROSION-RESISTANT (NAA)	101-	5
-12	172-69006	..PIN - A-4 SIGHT ADAPTER SUPPORTING		2
	AN960C716	..WASHER -		2
	AN365B720	..NUT -		2
-13	AN500AC416-28	.SCREW -		4
	AN960C416	.WASHER -		12
-14	172-69003	SUPPORT ASSY - A-4 SIGHT HEAD MOUNTING (SEE SECTION 3)		REF
		-000-		

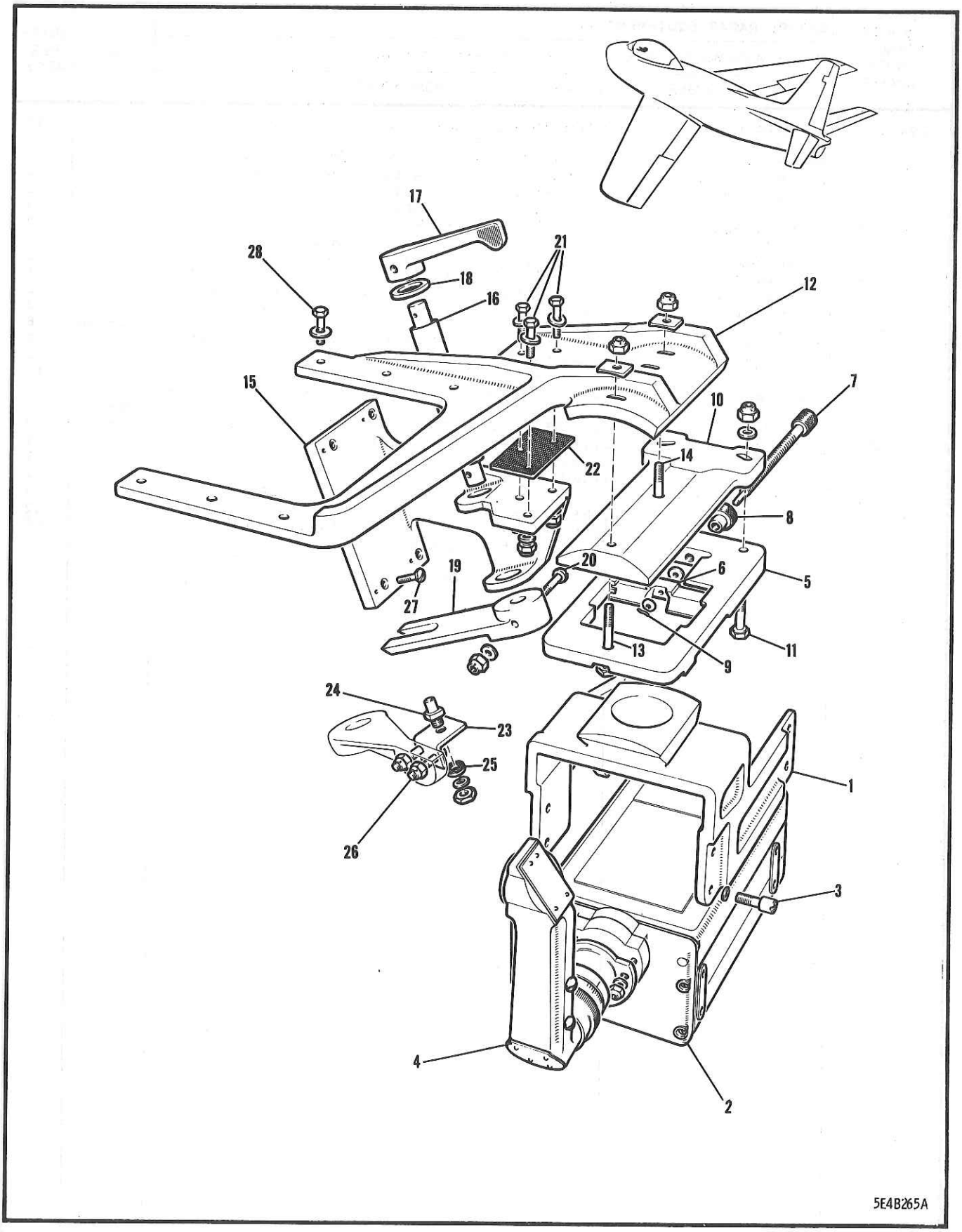

FIGURE 295 RADAR GUNSIGHT CAMERA EQUIPMENT

FIGURE AND INDEX NUMBER	GROUP RADAR EQUIPMENT MAJOR ASSEMBLY RADAR GUNSIGHT CAMERA EQUIPMENT PART NUMBER	1234567 NOMENCLATURE	CODE	UNITS PER ASSY
295 -	13B-52010-20	CAMERA INSTL - A-4 GUN-BOMB-ROCKET SIGHT AN-N6 & AN-N9 (SEE FIG. 293) (AS PER EO 05-5E-6A/65)		NP
- 1	192-66004	•SUPPORT - AN-N9 CAMERA SADDLE		1
- 2	AN-N9	•CAMERA - (G.F.E.)(WITHOUT LENS, FILTER & SELECTOR SWITCH)		1
- 3	AN502-10-8	•SCREW -		8
	AN935-10	•WASHER -		8
- 4	B13000C	•HEAD - (ZMR) (ERECTOR)		1
	AN960-8L	•WASHER -		3
	AN365-832	•NUT -		3
	192-66008	•RECEPTACLE ASSY - AN-N9 CAMERA MOUNTING		1
- 5	192-66005	••RECEPTACLE - AN-N9 CAMERA MOUNTING		1
- 6	192-66007	••SLIDE - AN-N9 CAMERA MOUNTING RECEPTACLE		1
- 7	192-66012	••BOLT - AN-N9 CAMERA RECEPTACLE		1
- 8	192-66011	••CHECK-NUT - AN-N9 CAMERA RECEPTACLE		1
	192-66014	••WASHER - AN-N9 CAMERA RECEPTACLE		1
	3530-05-02	••WASHER - SPRING (SHI) OR		1
	3502-05-01	••WASHER - SPRING (SHI)		
- 9	192-66008-3	••STOP - AN-N9 CAMERA MOUNTING RECEPTACLE		1
-10	192-66006	•BLOCK - AN-N9 CAMERA CYLINDRICAL SUPPORT		1
-11	AN3-10A	•BOLT -		2
	AN960-10L	•WASHER -		2
	AN365-1032	•NUT -		2
-12	13B-52011	•SUPPORT - AN-N6 & AN-N9 CAMERA ASSY		1
-13	AN4-10A	•BOLT -		1
-14	AN4-13A	•BOLT -		1
	13B-52015	•WASHER - AN-N6 & AN-N9 CAMERA		2
	AN365-428	•NUT -		2
	176-66009-801	•BRACE ASSY - AN-N6 CAMERA SUPPORT		1
-15	176-66010-10	••BRACE - AN-N6 CAMERA SUPPORT		1
-16	176-66013-801	••SHAFT - A-4 GBR/SIGHT REMOTE CAGING LEVER		1
-17	176-66011	••LEVER - A-4 GUN-BOMB-ROCKET SIGHT REMOTE CAGING CAMERA BRACE		1
-18	2W1AL34-24-64	••WASHER - PLAIN (NAA)		1
-19	176-66012-801	••FORK - A-4 GBR/SIGHT REMOTE CAGING LEVER		1
-20	NAS220-16	••SCREW -		1
	AN960D8L	••WASHER -		1
	AN364-832	••NUT -		1
-21	AN3-7A	•BOLT -		3
	AN960D10	•WASHER -		3
-22	176-66020	•PLATE - AN-N6 CAMERA SUPPORT TO BRACE SERRATED LOCKING		1
	AN960D10	•WASHER -		3
	AN365-1032	•NUT -		3
	13B-52014	•ADAPTER ASSY - CAGING LEVER		1
-23	13B-52014-3	••ADAPTER - CAGING LEVER		1
-24	13B-52014-5	••SHAFT - CAGING LEVER ADAPTER		1
-25	176-66020-800	••WASHER - AN-N6 CAMERA SUPPORT TO BRACE SERRATED LKG PLATE(LEVER ADPT SHAFT)		1
	AN935-416	••WASHER -		1
	AN316-4R	••NUT -		1
-26	AN507-832R16	•SCREW -		2
	AN365-832	•NUT -		2
-27	AN507-632R8	•SCREW -		4
-28	AN3-5A	•BOLT -		6
	AN935-10	•WASHER -		6

-000-

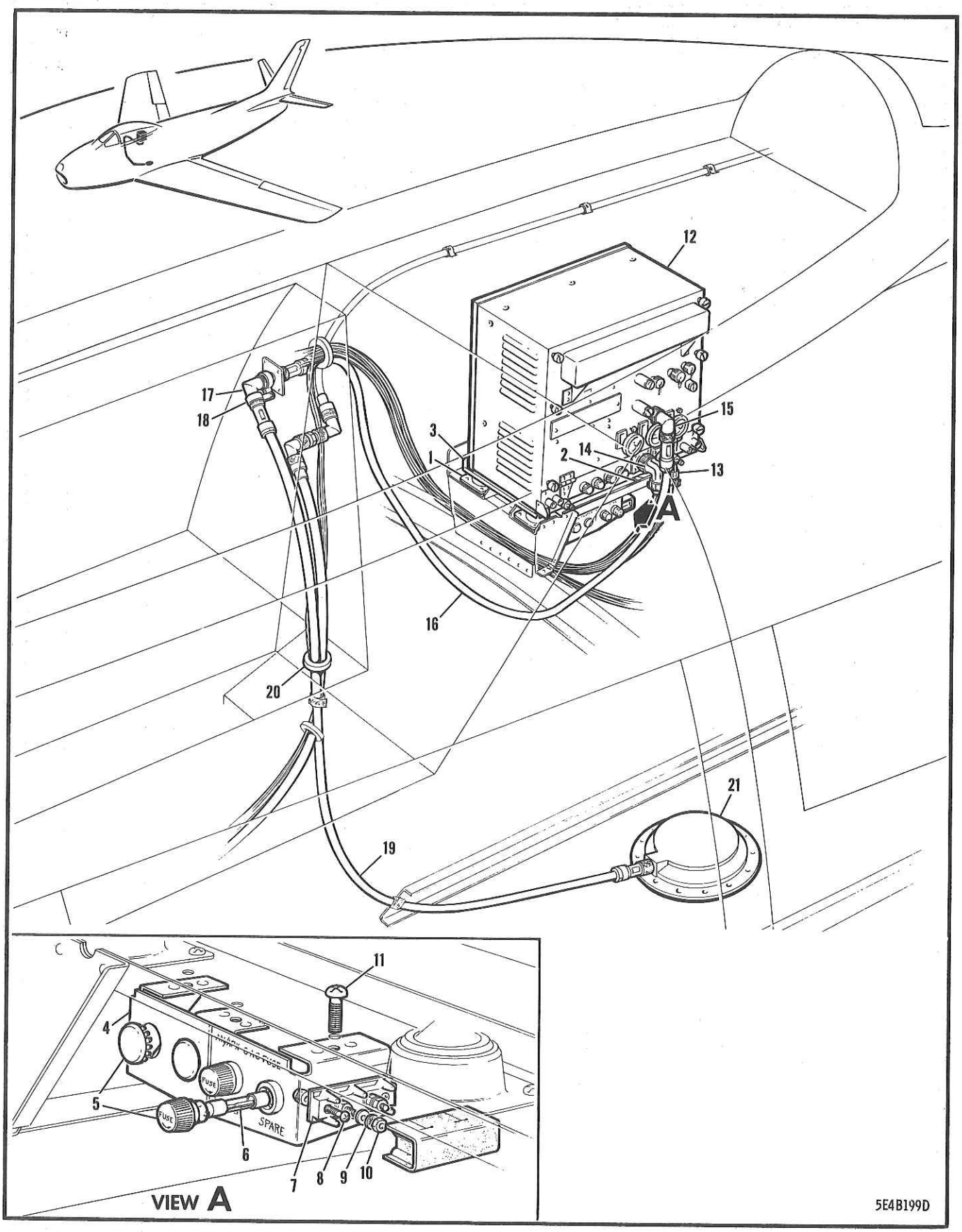

FIGURE 296 AN/APX6 RADAR EQUIPMENT

FIGURE AND INDEX NUMBER	GROUP RADAR EQUIPMENT MAJOR ASSEMBLY AN/APX6 RADAR EQUIPMENT PART NUMBER 1234567 NOMENCLATURE	CODE	UNITS PER ASSY
296 -	170-71031	RADIO EQUIP. INSTL - FUSELAGE STA 0-236 (SEE SECTION 18)		REF
- 1	161-74045	.MOUNT ASSY - AN/APX-6 RADAR RECR/XMTR		1
	161-71006	..STRAP - RADIO BONDING		2
- 2	AN8008D30	..INSULATOR -		2
- 3	AN8008D28	..INSULATOR -		2
	AN4-12A	..BOLT -		4
	AN8013-2	..WASHER -		8
	AN365-428	..NUT -		4
	AN515-8R6	..SCREW -		2
	AN960C416L	..WASHER -		4
	AN365-832	..NUT -		2
	M1593	..CLAMP - (PSI) OR		2
	295981	..CLAMP - (MKM)		
	AN515-8R8	.SCREW -		8
	161-74049-800	.PANEL ASSY - AN/APX-6 RADAR IND LT & FUSE (AS PER EO 05-5E-6A/224)		1
- 4	161-74048-800	..PANEL ASSY - AN/APX-6 RADAR IND LT & FUSE		1
	BC727	..BOX - INDICATOR (G.F.E.)		1
	HKP	..HOLDER - PANEL MOUNTED FUSE (BUS)		2
- 5	SS50727	..BUTTON - (UCF) (AS PER EO 05-5E-6A/224)	001-746	2
- 6	AGC-5	..FUSE - GLASS TUBE (BUS)		2
- 7	NAS45-6-2	..TERMINAL BLOCK ASSY - ELECTRICAL		1
- 8	AN515-4R6	..SCREW - (BLOCK TO PANEL ATTACHING)		2
	AN365-440	..NUT -		2
- 9	AN936A6	..LOCK-WASHER -		2
	AN960-6	..WASHER -		2
-10	AN340-6	..NUT -		2
-11	AN515-8R7	.SCREW - (CONNECTOR PANEL TO XMTR MT ATT)		3
	397-2	.COVER - ELECTRICAL TERMINAL BLOCK (HEN) (AS PER EO 05-5E-6A/237)		AR
-12	RT279A/APX-25	.TRANSPONDER - (G.F.E.) (AS PER EO 05-5E-6A/275) OR		1
	RT279/APX-25	.TRANSPONDER - (G.F.E.) (AS PER EO 05-5E-6A/275)		
-13	AN3108B14S5S	.CONNECTOR -		1
-14	AN3108B18-1P	.CONNECTOR -		1
	AN3057-6	.ADAPTER -		1
	AN3057-10	.ADAPTER -		1
-15	UG-212A/U	.ADAPTER - RIGHT ANGLE (APC)		1
-16	161-74046	.CABLE ASSY - AN/APX-6 RDR ANTENNA COAXIAL		1
	AN515-4R7	.SCREW -		4
	AN365-440	.NUT -		4
	295004	.STRAP - (UCF)		2
	295005	.STRAP - (UCF)		2
-17	UG-212A/U	.ADAPTER - RIGHT ANGLE (APC)		1
-18	AN735D14	.CLAMP -		2
	AN500A8-8	.SCREW -		2

FIGURE AND INDEX NUMBER	GROUP	RADAR EQUIPMENT	CODE	UNITS PER ASSY
	MAJOR ASSEMBLY	AN/APX6 RADAR EQUIPMENT		
	PART NUMBER	1234567 NOMENCLATURE		
296 -	AN515-8R7	•SCREW -		1
	AN365-832	•NUT -		2
-19	161-74046-10	•CABLE ASSY - RADAR ANTENNA COAXIAL		1
-20	AN931A16S22	•GROMMET -		1
	295005	•STRAP - (UCF)		1
	295004	•STRAP - (UCF)		2
	49296	•CLIP - (UCF)		1
	49184	•CLIP - (UCF)		1
-21	AT-234/APX	•ANTENNA - (G•F•E•)		1
	AN509-8R10	•SCREW - (ANTENNA ATTACHING)		12
	AN735D14	•CLAMP -		1
	AN735D11	•CLAMP -		1
	AN500A8-7	•SCREW -		2
	AN365-832	•NUT -		2
		-000-		

SECTION 20
ARMAMENT EQUIPMENT

TABLE OF CONTENTS

FIGURE	TITLE	PAGE
297	.50 CALIBRE NOSE GUN ARMAMENT EQUIPMENT	1226
298	.50 CALIBRE NOSE GUN EQUIPMENT	1230
299	.50 CALIBRE NOSE GUN PNEUMATIC CHARGING	1234
300	GUN OPEN PORT BLAST PANEL	1240
301	.50 CALIBRE SHELL CASE & LINK EJECTION LINER	1242
301A	.50 CALIBRE REAR SHELL CASE & LINK EJECTION LINER	1248
302	PILOT REAR ARMOUR-PLATE	1252
303	TOW TARGET FORWARD RELEASE EQUIPMENT (EFFECTIVE AIRCRAFT 23001 TO 23430 INCL)	1256
304	TOW TARGET REAR RELEASE EQUIPMENT (EFFECTIVE AIRCRAFT 23001 TO 23430 INCL)	1260
305	TOW TARGET RELEASE MECHANISM (EFFECTIVE AIRCRAFT 23001 TO 23430 INCL)	1262
306	MOUNTED GUN CAMERA	1266

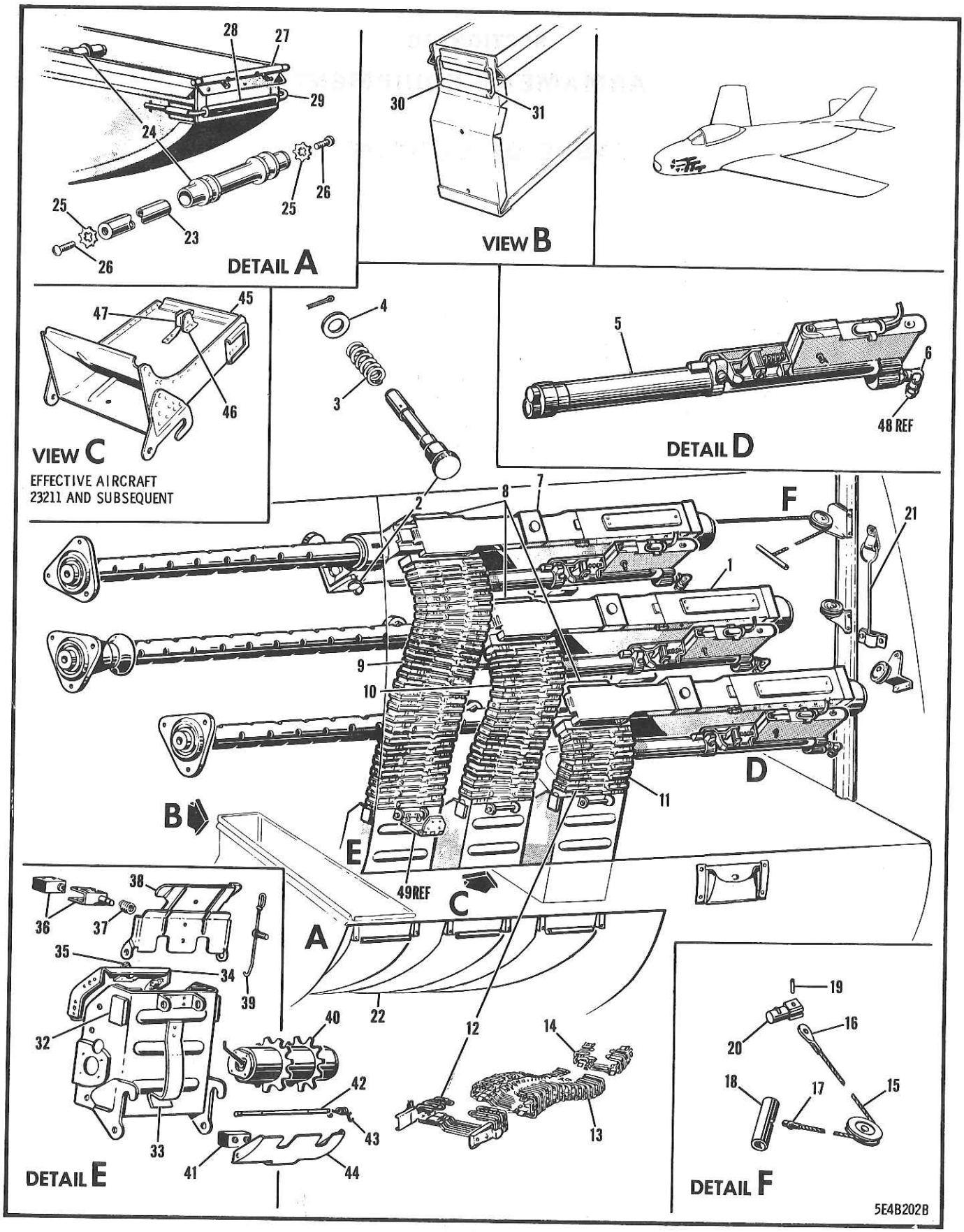

FIGURE 297 50 CALIBRE NOSE GUN ARMAMENT EQUIPMENT

FIGURE AND INDEX NUMBER	GROUP / MAJOR ASSEMBLY / PART NUMBER	ARMAMENT EQUIPMENT / .50 CALIBER NOSE GUN ARMAMENT EQUIPMENT / 1234567 NOMENCLATURE	CODE	UNITS PER ASSY
297 -	140-61031	ARMAMENT INSTL - 6 FIXED .50 CAL NOSE GUNS (SEE FIG. 1)		NP
	151-61032	.GUN EQUIPMENT INSTL - 6 FIXED .50 CALIBRE (SEE FIG. 298)		REF
- 1	MODEL M3	.GUN - AIRCRAFT MACHINE .50 CAL (G.F.E.)		6
- 2	44A11184	.PIN - GUN TRUNNION BRACKET (G.F.E.)		6
		OR		
	AF422350-2	.PIN - GUN TRUNNION BRACKET (G.F.E.)		
- 3	43A10866	.SPRING - GUN TRUNNION BRACKET (G.F.E.)		6
		OR		
	AF422350-3	.SPRING - GUN TRUNNION BRACKET (G.F.E.)		
- 4	43A10936	.WASHER - GUN TRUNNION BRKT SPRING (G.F.E.)		6
		OR		
	AF422350-4	.WASHER - GUN TRUNNION BRKT SPRING (G.F.E.)		
	AN380-3-4	.COTTER-PIN -		6
- 5	871209	.CHARGER - (KCI) (MANUAL GUN TYPE S4) (AS PER EO 05-5E-6A/95)		6
- 6	219-1016-3	.RECEPTACLE ASSY - (AFP)		6
	AN6290-3	.GASKET -		6
	AN6289D3	.NUT -		6
	AN6291-3	.RING -		6
- 7	44B25259	.HEATER ASSY - ELEC GUN TYPE J4 (G.F.E.)	001-370	6
	53D4988	.HEATER ASSY - ELEC GUN TYPE J4A (G.F.E.)	371-	6
- 8	K500-6-L	.CHUTE ASSY - (WCE) (FLEXIBLE GUN LINK EJ) (AS PER EO 05-5E-6A/96)		3
	K500-6-R	.CHUTE ASSY - (WCE) (FLEXIBLE GUN LINK EJ) (AS PER EO 05-5E-6A/96)		3
- 9	151-61095-1	.CHUTE ASSY - .50 CAL NOSE GUN FEED (PORT)		1
	151-61095-2	.CHUTE ASSY - .50 CAL NOSE GUN FEED (STBD)		1
-10	151-61095-3	.CHUTE ASSY - .50 CAL NOSE GUN FEED (PORT)		1
	151-61095-4	.CHUTE ASSY - .50 CAL NOSE GUN FEED (STBD)		1
-11	151-61095-5	.CHUTE ASSY - .50 CAL NOSE GUN FEED (PORT)		1
	151-61095-6	.CHUTE ASSY - .50 CAL NOSE GUN FEED (STBD)		1
-12	LB3A	..BOX END - FLEXIBLE FEED CHUTE LH (HUG)		1
	RB3A	..BOX END - FLEXIBLE FEED CHUTE RH (HUG)		1
-13	H-250LC	..LINK - FLEXIBLE FEED CHUTE .50 CAL (HUG)		AR
	H-250RC	..LINK - FLEXIBLE FEED CHUTE .50 CAL (HUG)		AR
-14	110-1086	..GUN END - FLEXIBLE FEED CHUTE LH (HUG)		1
	110-1086-1	..GUN END - FLEXIBLE FEED CHUTE RH (HUG)		1
	120-615562	.CABLE ASSY - .50 CALIBRE GUN CHARGER		2
	120-615562-10	..CABLE ASSY - .50 CALIBRE GUN CHARGER		1
-15	120-615562-3	...CABLE - .50 CALIBRE GUN CHARGER		1
-16	AN668-4	...TERMINAL -		1
-17	AN663C4	...TERMINAL -		1
-18	109-61127	...HANDLE - WING FIXED GUN CHARGER TUBE		1
-19	120-615562-2	..PIN - .50 CALIBRE GUN CHARGER		1
-20	120-61620	..PIN - .50 CALIBRE MACHINE GUN CHARGER		1
-21	140-61091	.HOOK - FIXED .50 CALIBRE NOSE GUN AMO	001-712	2
	13B-79022	.HOOK - FIXED .50 CALIBRE NOSE GUN AMO	713-	2
-22	140-61065-1	.BOX ASSY - .50 CAL FIXED GUN AMO (PORT) (FOR SABRE 5A, EQUALLY DISTRIBUTE A TOTAL BALLAST OF 100 POUNDS BETWEEN THE 3 AMO BOXES)		3
	140-61065-2	.BOX ASSY - .50 CAL FIXED GUN AMO (STBD) (FOR SABRE 5A, EQUALLY DISTRIBUTE A TOTAL BALLAST OF 100 POUNDS BETWEEN THE 3 AMO BOXES)		3
-23	4S5	..SPACER - THREADED (NAA)		1

FIGURE AND INDEX NUMBER	GROUP ARMAMENT EQUIPMENT MAJOR ASSEMBLY .50 CALIBRE NOSE GUN ARMAMENT EQUIPMENT PART NUMBER	1234567 NOMENCLATURE	CODE	UNITS PER ASSY
297 -24	6R2N2	••ROLLER ASSY - AMMUNITION •50 CAL (NAA)		1
-25	4010-18	••LOCK-WASHER - EXTERNAL-INTERNAL TYPE(SHI)		2
-26	AN520-10R7	••SCREW - (ROLLER TO CAN ATTACHING)		2
-27	140-61065-29	••RELEASE ASSY - QUICK(MAKE FROM 980 (BUR))		1
		OR		
	1202A	••RELEASE ASSY - (CTI) (QUICK)		
	140-61026	••HANDLE ASSY - FIXED •50 CAL GUN AMO BOX		1
-28	140-61026-5	•••TUBE - AMMUNITION BOX HANDLE		1
-29	140-61026-3	•••ROD - AMMUNITION BOX HANDLE		1
	99836	••CROSS-PIN - AIRLOC FASTENER (MKM)		2
	140-61028	••HANDLE ASSY - •50 CAL FIXED GUN AMO BOX		1
-30	140-61028-5	•••TUBE - AMMUNITION BOX HANDLE		1
-31	140-61028-3	•••ROD - AMMUNITION BOX HANDLE		1
	151-61110-801	•MOTOR ASSY - AMMUNITION BOOSTER (PORT) (AS PER EO 05-5E-6A/130)	001-210	3
	151-61110-801	•MOTOR ASSY - AMMUNITION BOOSTER (PORT)	211-610	2
	151-61110-803	•MOTOR ASSY - AMMUNITION BOOSTER (PORT)	611-	2
	151-61110-802	•MOTOR ASSY - AMMUNITION BOOSTER (STBD) (AS PER EO 05-5E-6A/130)	001-210	3
	151-61110-802	•MOTOR ASSY - AMMUNITION BOOSTER (STBD)	211-610	2
	151-61110-804	•MOTOR ASSY - AMMUNITION BOOSTER (STBD)	611-	2
-32	140-61101-1	••HOUSING ASSY - AMMUNITION BSTR MTR (PORT)		1
	140-61101-2	••HOUSING ASSY - AMMUNITION BSTR MTR (STBD)		1
-33	140-61101-951	•••SPRING - AMO BOOSTER MOTOR HOUSING ATT (AS PER EO 05-5E-6A/152)		1
	140-61102-7	••COVER ASSY - AMO BOOSTER MOTOR WIRING TOP		1
-34	140-61102-5	•••COVER - AMO BOOSTER MOTOR WIRING TOP		1
-35	AN3102-14S2P	•••RECEPTACLE -		1
	AN515-4R5	•••SCREW - (RECEPTACLE TO COVER ATTACHING)		3
	AN515-4R6	•••SCREW - (RECEPTACLE TO COVER ATTACHING)		1
	2W18-4	•••WASHER - FLAT (NAA)		1
	AN365-440	•••NUT -		4
	AN520-10R6	••SCREW -		3
	AN751-3-6	••JUMPER -		1
	AN520-10R7	••SCREW - (JUMPER ATTACHING)		1
-36	DPR-205	••SWITCH ASSY - HEAVY DUTY (AOV) (CONSISTS OF DR-201 TYPE D MU-SWITCH & T1892 ACTE (AOV)) (AS PER EO 05-5E-6A/130)		1
	AN515-8R20	••SCREW - (AS PER EO 05-5E-6A/130)		2
	AN960-8L	••WASHER -		4
	AN365-832	••NUT -		2
	9E1-1-4	••EXTRUSION - PLASTIC (NAA)		2
-37	151-61105	••SPRING - AMO BOOSTER MTR OVERFEED SWITCH		1
-38	140-61105-1	••ACTUATOR - AMMUNITION BOOSTER MOTOR OVERFEED SWITCH PORT		1
	140-61105-2	••ACTUATOR - AMMUNITION BOOSTER MOTOR OVERFEED SWITCH STARBOARD		1
-39	140-61117	••ACTUATOR ASSY - AMMUNITION BOOSTER ANTI-ROLL BACK RELEASE		1
	140-61117-3	•••ACTUATOR - AMMUNITION BOOSTER ANTI-ROLL BACK RELEASE		1
	AN501A416-10	•••SCREW -		1
	AN960-416	••WASHER -		1
	AN365-428	••NUT -		1
-40	110-2100	••BOOSTER - •50 CALIBRE MODEL H250A LH(HUG)		1
		OR		
	29492-1	••BOOSTER - (HUG) (•50 CALIBRE LH)		
	110-2100-1	••BOOSTER - •50 CALIBRE MODEL H250A RH(HUG)		1
		OR		
	29492-2	••BOOSTER - (HUG) (•50 CALIBRE RH)		

FIGURE AND INDEX NUMBER	GROUP ARMAMENT EQUIPMENT MAJOR ASSEMBLY .50 CALIBRE NOSE GUN ARMAMENT EQUIPMENT		CODE	UNITS PER ASSY
	PART NUMBER	1234567 NOMENCLATURE		
	AN500A6-5	••SCREW - (BOOSTER TO HOUSING ATTACHING)		8
297 -41	WA3S-A38	••SWITCH - (MSC) (LAST-ROUND) (AS PER EO 05-5E-6A/130)		1
	151-61110-951	••COVER - AMO BOOSTER MOTOR (MAKE FROM 8C4 (NAA)) (AS PER EO 05-5E-6A/130)		1
	AN515-6R18	••SCREW -		2
	AN960D6	••WASHER -		2
	AN365-632	••NUT -		2
-42	140-61116	••ROD - AMMUNITION BOOSTER MOTOR LAST-ROUND ACTUATING HINGE		1
-43	140-61115	••SPRING - AMMUNITION BOOSTER MOTOR LAST-ROUND SWITCH		1
	AN380-2-2	••COTTER-PIN -		3
-44	140-61103	••ACTUATOR ASSY - AMMUNITION BOOSTER MOTOR LAST-ROUND SWITCH		1
	755-3-2-6	••CLIP - INTEGRALLY BONDED SUPPORT (ADE) (AS PER EO 05-5E-6A/130)	001-210	2
	755-6-2-6	••CLIP - INTEGRALLY BONDED SUPPORT (ADE)	211-	1
	755-3-2-6	••CLIP - INTEGRALLY BONDED SUPPORT (ADE)	211-	1
	AN515-8R6	••SCREW -		2
	AN365-832	••NUT -		2
	AN520-10R7	•SCREW - (JUMPER ATTACHING)		6
	AN960D10L	•WASHER -		6
	AN365-1032	•NUT -		6
	191-61110-1	•ADAPTER ASSY - •50 CAL LWR GUN FEED (PORT)	211-610	1
	191-61110-801	•ADAPTER ASSY - •50 CAL LWR GUN FEED (PORT)	611-	1
	191-61110-2	•ADAPTER ASSY - •50 CAL LWR GUN FEED (STBD)	211-610	1
	191-61110-802	•ADAPTER ASSY - •50 CAL LWR GUN FEED (STBD)	611-	1
-45	191-61110-11	••ADAPTER ASSY - •50 CAL LWR GUN FEED PORT	211-	1
	191-61110-12	••ADAPTER ASSY - •50 CAL LWR GUN FEED STBD	211-	1
-46	13-79023	••MECHANISM ASSY - ADAPTER ANTI-ROLL BACK (AS PER EO 05-5E-6A/94)	211-	1
-47	13-79024	••SPRING - ADAPTER ANTI-ROLL BACK (AS PER EO 05-5E-6A/94)	211-	1
-48	219-1020-3	PLUG ASSY - (AFP) (GUN PNEUMATIC CHARGER) (SEE FIG. 299)		REF
-49	140-61088	BRACKET ASSY - BOOSTER MOTOR FWD ATTACHING (SEE SECTION 3)		REF
		-000-		

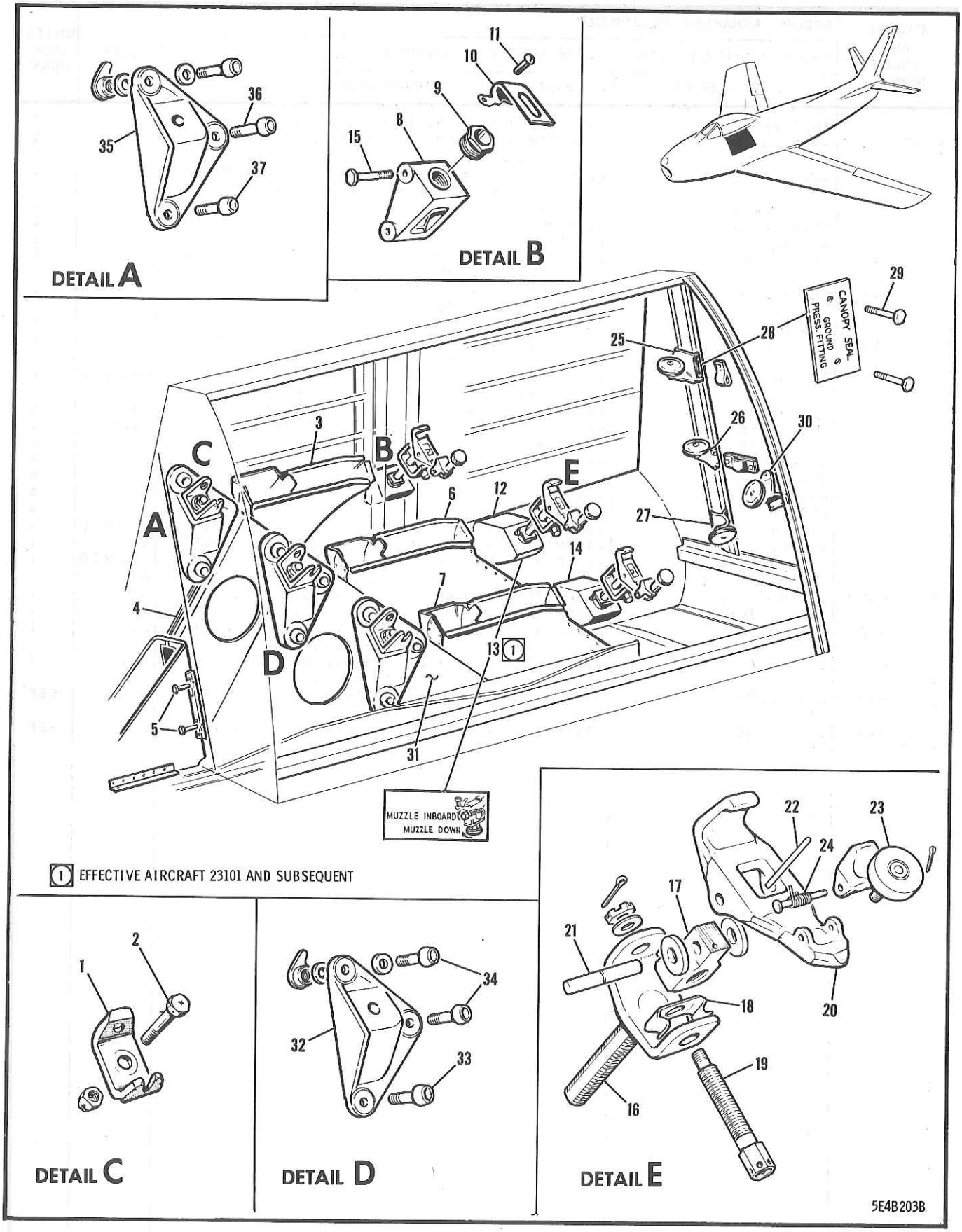

FIGURE 298 .50 CALIBRE NOSE GUN EQUIPMENT

FIGURE AND INDEX NUMBER	GROUP ARMAMENT EQUIPMENT MAJOR ASSEMBLY .50 CALIBRE NOSE GUN EQUIPMENT PART NUMBER	1234567 NOMENCLATURE	CODE	UNITS PER ASSY
298 -	151-61032	GUN EQUIP. INSTL - 6 FIXED .50 CALIBRE (SEE FIG. 297)		NP
	170-61030	.CHARGING INSTL - .50 CALIBRE NOSE GUN PNEU (SEE FIG. 299)		REF
	161-61033	.PANEL INSTL - GUN OPEN PORT BLAST (SEE FIG. 300)		REF
- 1	44B11182	.YOKE - GUN TRUNNION (G.F.E.)		6
		OR		
	422350-1	.YOKE - GUN TRUNNION (G.F.E.)		
- 2	AN12H17	.BOLT - MPI		6
	AN310-12	.NUT - MPI		6
- 3	151-61082-41	.CHUTE ASSY - NO. 1 GUN CASE EJ UPPER(PORT)	001-719	1
	151-61082-841	.CHUTE ASSY - NO. 1 GUN CASE EJ UPPER(PORT)	720-	1
	151-61082-42	.CHUTE ASSY - NO. 1 GUN CASE EJ UPPER(STBD)	001-719	1
	151-61082-842	.CHUTE ASSY - NO. 1 GUN CASE EJ UPPER(STBD)	720-	1
	AN3-4A	.BOLT -		4
	AN3-5A	.BOLT -		4
- 4	140-61083-31	.CHUTE ASSY - NO. 1 GUN CASE EJ CTR (PORT)		1
	140-61083-32	.CHUTE ASSY - NO. 1 GUN CASE EJ CTR (STBD)		1
- 5	AN3-3A	.BOLT -		2
	AN3-7A	.BOLT -		4
- 6	151-61084-1	.CHUTE ASSY - NO. 1 GUN CASE EJ LOWER(PORT)		1
	151-61084-2	.CHUTE ASSY - NO. 1 GUN CASE EJ LOWER(STBD)		1
	AN3-5A	.BOLT -		8
- 7	151-61080-41	.CHUTE ASSY - NO. 2 & 3 GUN CASE EJ (PORT)		1
	151-61080-42	.CHUTE ASSY - NO. 2 & 3 GUN CASE EJ (STBD)		1
	AN3-3A	.BOLT -		4
	AN3-5A	.BOLT -		4
	AN960-10	.WASHER -		8
	AN365-1032	.NUT -		4
	161-61070	.MOUNT ASSY - NO. 1 GUN REAR COMPLETE		2
- 8	151-61060-3	..MOUNT - NO. 1 .50 CALIBRE FIXED GUN REAR		1
- 9	RZA10020	..MOUNT - (ROS)		1
	RL124SH-12	..LOCK-RING - STANDARD (ROS)		1
-10	159-61036	..LOCK - .50 CAL GUN REAR MOUNT ADJ POST		1
-11	AN500A10-6	..SCREW -		2
-12	161-61056	.MOUNT ASSY - NO. 2 GUN REAR COMPLETE		2
	140-61061-3	..MOUNT - NO. 2 .50 CALIBRE FIXED GUN REAR		1
	RZA10020	..MOUNT - (ROS)		1
	RL124SH-12	..LOCK-RING - STANDARD (ROS)		1
	159-61036	..LOCK - .50 CAL GUN REAR MOUNT ADJ POST		1
	AN500A10-6	..SCREW -		2
-13	191-61076	..DECALCOMANIA - .50 CAL GUN REAR MOUNT ADJ	101-	1
-14	161-61060	.MOUNT ASSY - NO. 3 GUN REAR COMPLETE		2
	151-61061-3	..MOUNT - NO. 3 .50 CALIBRE FIXED GUN REAR		1
	RZA10020	..MOUNT - (ROS)		1
	RL124SH-12	..LOCK-RING - STANDARD (ROS)		1
	159-61036	..LOCK - .50 CAL GUN REAR MOUNT ADJ POST		1
	AN500A10-6	..SCREW -		2
-15	AN4-32A	.BOLT - MPI		4
	AN4-31A	.BOLT - MPI		4
	AN4-30A	.BOLT -		4
	AN960-416	.WASHER -		12
	AN365-428	.NUT -		12
	1175	.MOUNT ASSY - (TIO) (.50 CALIBRE GUN REAR)		6
-16	61960	..POST ASSY - (TIO)(.50 CAL GUN REAR MOUNT)		1
-17	61959	..NUT - (TIO) (REAR GUN MOUNT ADJUSTING)		1
-18	61956	..DETENT - (TIO) (REAR GUN MOUNT ADJ BOLT)		1
-19	61955	..BOLT - (TIO) (REAR GUN MOUNT)		1
	AN960-816	..WASHER -		1

FIGURE AND INDEX NUMBER	GROUP ARMAMENT EQUIPMENT MAJOR ASSEMBLY .50 CALIBRE NOSE GUN EQUIPMENT PART NUMBER	1234567 NOMENCLATURE	CODE	UNITS PER ASSY
298 -	AN320-8	••NUT -		1
	AN380-3-3	••COTTER-PIN -		1
-20	61048A	••CLAMP - (TIO) (REAR GUN MOUNT)		1
	2W1SR-32-28-125	••WASHER - PLAIN (NAA)		2
-21	61037	••PIN - (TIO) (REAR GUN MOUNT CLAMP SUP.)		1
-22	1175-2	••PIN - (TIO)		1
-23	1184	••KNOB ASSY - (TIO) (REAR GUN MOUNT FIXED)		1
-24	61046	••SPRING - (TIO) (REAR GUN MOUNT CLAMP LUG)		1
	AN393-41	••PIN -		1
	AN380-2-2	••COTTER-PIN -		1
-25	140-61040-1	•BRACKET ASSY - NO. 1 GUN CHARGING PULLEY (PORT SIDE)		1
	140-61040-2	•BRACKET ASSY - NO. 1 GUN CHARGING PULLEY (STARBOARD SIDE)		1
-26	140-61041-1	•BRACKET ASSY - NO. 2 GUN CHARGING PULLEY (PORT SIDE)		1
	140-61041-2	•BRACKET ASSY - NO. 2 GUN CHARGING PULLEY (STARBOARD SIDE)		1
-27	140-61042-1	•BRACKET ASSY - NO. 3 GUN CHARGING PULLEY (PORT SIDE)		1
	140-61042-2	•BRACKET ASSY - NO. 3 GUN CHARGING PULLEY (STARBOARD SIDE)		1
	M3A	••PULLEY - (GAE) (CHARGING) OR		3
	M3B	••PULLEY - (GAE) (CHARGING)		
	NAS222-18	••SCREW -		1
	NAS222-21	••SCREW -		2
	AN960-416	••WASHER - (NO. 1 GUN PULLEY BRACKET PORT)		2
	AN960-416	••WASHER -		4
	AN365-428	••NUT -		3
	140-61044	••SPRING - FIXED GUN CHARGING PULLEY GUARD		3
-28	172-53426	•NAME-PLATE - H/VENT CANOPY SEAL GROUND PRESSURE FITTING		1
-29	AN3-15A	•BOLT -		2
	AN3-14A	•BOLT -		10
	AN960-10	•WASHER -		12
	AN365-1032	•NUT -		12
-30	140-61029-1	•BRACKET ASSY - NO. 3 FIXED GUN OUTBD CHG PULLEY (PORT SIDE)		1
	140-61029-2	•BRACKET ASSY - NO. 3 FIXED GUN OUTBD CHG PULLEY (STARBOARD SIDE)		1
	M3B	••PULLEY - (GAE) (CHARGING)		1
	NAS222-18	••SCREW -		1
	AN960-416	••WASHER -		1
	AN365-428	••NUT -		1
	2C16-6	••CLIP - CONDUIT (NAA)		1
	AN515-8R7	••SCREW -		1
	AN960D8	••WASHER -		1
	AN365-832	••NUT -		1
	140-61044	••SPRING - FIXED GUN CHARGING PULLEY GUARD		1
	AN3-4A	•BOLT -		2
	AN3-6A	•BOLT -		4
	AN960-10	•WASHER -		6
	AN365-1032	•NUT -		6
	170-31132-801	FUSELAGE ASSY - STA 84-127 (SEE SECTION 3)		REF
-31	151-31166-61	•SUPPORT ASSY - GUN TRUNNION FWD MOUNT FUS STA 84-109 (PORT)		1
	151-31166-62	•SUPPORT ASSY - GUN TRUNNION FWD MOUNT FUS STA 84-109 (STBD)		1
	151-31158-41	••WEB ASSY - GUN TRUNNION UPPER CANTED FUS STA 85-109 (PORT)		1

FIGURE AND INDEX NUMBER	GROUP ARMAMENT EQUIPMENT MAJOR ASSEMBLY .50 CALIBRE NOSE GUN EQUIPMENT PART NUMBER	1234567 NOMENCLATURE	CODE	UNITS PER ASSY
298 -	151-31158-42	••WEB ASSY - GUN TRUNNION UPPER CANTED FUS STA 85-109 (STBD)		1
	151-31158-21	•••FAIRLEAD - UPPER CANTED WEB		1
	152-31178-5	•••FITTING - FUSELAGE FORWARD GUN TRUNNION SUP. (PORT SIDE)		1
	152-31178-6	•••FITTING - FUSELAGE FORWARD GUN TRUNNION SUP. (STBD SIDE)		1
	152-31178-3	••FITTING - FUS FWD GUN TRUNNION SUP.(PORT)		1
	152-31178-4	••FITTING - FUS FWD GUN TRUNNION SUP.(STBD)		1
	152-31178-7	••FITTING - FUS FWD GUN TRUNNION SUP.(PORT)		1
	152-31178-8	••FITTING - FUS FWD GUN TRUNNION SUP.(STBD)		1
	152-31189-3	••FITTING - FUS FWD GUN TRUNNION SUP.(PORT)		1
	152-31189-4	••FITTING - FUS FWD GUN TRUNNION SUP.(STBD)		1
	151-31760-1	••TEE - FUSELAGE CANTED GUN TRUNNION WEB TO PRESSURE WEB ATTACHING (PORT SIDE)		1
	151-31760-2	••TEE - FUSELAGE CANTED GUN TRUNNION WEB TO PRESSURE WEB ATTACHING (STBD SIDE)		1
	AN509-416-14	••SCREW -		3
	AN960C416L	••WASHER -		3
	AN365-428	••NUT -		3
	AN4-7A	••BOLT -		1
	AN4-5A	••BOLT - (STARBOARD SIDE)		1
	NAS222-11	••SCREW - (PORT SIDE)		1
	AN960C416L	••WASHER -		2
	AN365-428	••NUT -		2
-32	151-61030-3	••MOUNT - FIXED .50 CALIBRE GUN FWD (PORT)		2
	151-61030-4	••MOUNT - FIXED .50 CALIBRE GUN FWD (STBD)		2
-33	NAS146-26	••BOLT - (AS PER EO 05-5E-6A/125)		2
-34	NAS146-30	••BOLT - (AS PER EO 05-5E-6A/125)		4
	2W1C25-20-63	••WASHER - PLAIN (NAA) (UNDER NUT)		6
	MS20002C6	••WASHER - HIGH STRENGTH CSK (UNDER BOLT)		6
	52-1571-064	••NUT - (ESN) (SELF-WRENCHING)		6
	AN3-5A	•BOLT -		20
	AN960-10	•WASHER -		20
	AN365-1032	•NUT -		20
-35	151-61030-5	•MOUNT - FIXED .50 CALIBRE GUN (PORT SIDE)		1
	151-61030-6	•MOUNT - FIXED .50 CALIBRE GUN (STBD SIDE)		1
-36	NAS146-32	•BOLT - (AS PER EO 05-5E-6A/125)		2
	NAS146-28	•BOLT - (AS PER EO 05-5E-6A/125)		2
-37	NAS146-26	•BOLT - (AS PER EO 05-5E-6A/125)		2
	2W1C25-22-63	•WASHER - PLAIN (NAA) (UNDER NUT)		6
	MS20002C6	•WASHER - HIGH STRENGTH CSK (UNDER BOLT)		6
	52-1571-064	•NUT - (ESN) (SELF-WRENCHING)		6
	6-140	•TERMINAL BLOCK - ELECTRICAL (PORT SIDE)	001-200	1
	AN515-6R12	•SCREW -	001-200	2
	2W1R12-18-64	•WASHER - PLAIN (NAA)	001-200	2

-000-

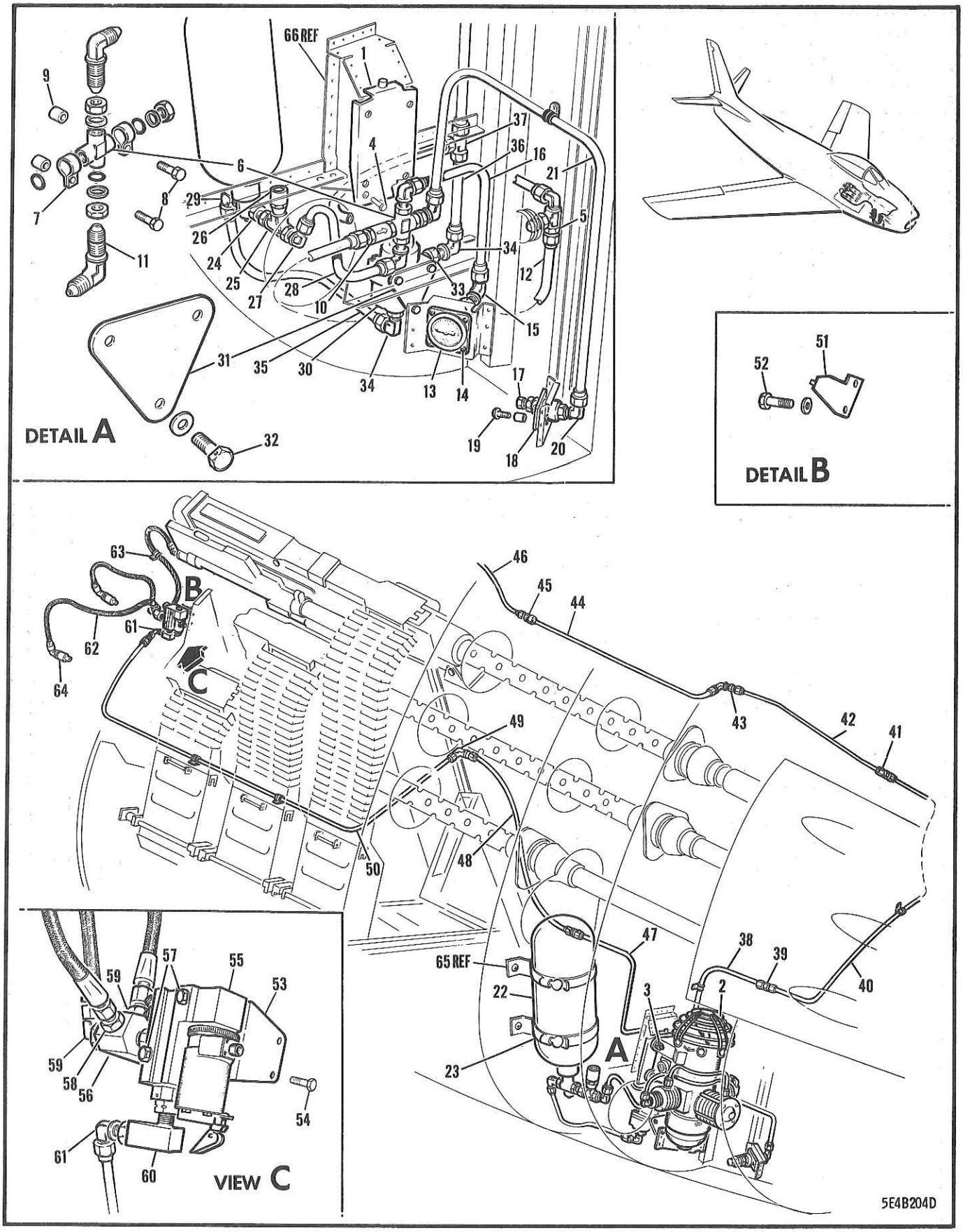

FIGURE 299 .50 CALIBRE NOSE GUN PNEUMATIC CHARGING

FIGURE AND INDEX NUMBER	GROUP / MAJOR ASSEMBLY / PART NUMBER	ARMAMENT EQUIPMENT / .50 CALIBER NOSE GUN PNEUMATIC CHARGING / 1234567 NOMENCLATURE	CODE	UNITS PER ASSY
299 -	170-61030	CHARGING INSTL - .50 CALIBRE NOSE GUN PNEUMATIC (SEE FIG. 298)		NP
- 1	170-61027	.BRACKET ASSY - .50 CALIBRE NOSE GUN PNEUMATIC CHARGER COMPRESSOR		1
	170-61028	..STUD - BRACKET SUPPORT		1
- 2	32R500-3	.COMPRESSOR ASSY - MODEL 32 PNEUMATIC (CCT)		1
- 3	AN507-428R14	.SCREW -		4
	AN960D416	.WASHER -		4
	AN365-428	.NUT -		4
- 4	AN4-5A	.BOLT -		2
	AN960D416L	.WASHER -		2
- 5	AN816-4D	.NIPPLE -		1
- 6	AN925-4D	.CROSS -		1
- 7	AN735D12	.CLAMP -		2
- 8	AN3-12A	.BOLT -		2
- 9	NAS43DD-3-48	.SPACER -		2
	AN960-10	.WASHER -		1
	AN6227B7	.PACKING -		1
-10	140B0100	.VALVE - AIR CHECK (CCT)	A46	1
		OR		
	119B100-4	.VALVE - AIR CHECK (CCT)	A46	
		OR		
	299A-4TT	.VALVE - AIR CHECK (JPC)	A46	
	840472	.VALVE - PNEUMATIC CHECK (KCI)	683-708	1
-11	AN833-4D	.ELBOW -		3
	AN6289D4	.NUT -		3
	AN6290-4	.GASKET -		3
	AN6291-4	.RING -		3
-12	170-61029-13	.LINE ASSY - AIR COMPRESSOR TO CROSS	A46	1
	170-61029-971	.LINE ASSY - AIR COMPRESSOR TO CROSS	683-708	1
-13	AN5771T4B	.GAUGE - SINGLE 1-7/8 IN. DIAL PRESSURE		1
		OR		
	AN5771T4C	.GAUGE - SINGLE 1-7/8 IN. DIAL PRESSURE		
	A6939-632-062	.SPEED-NUT - CAGE TYPE (TIN) (FRONT INSTRUMENT MOUNTING)		4
-14	AN515-6R28	.SCREW -		4
	NAS43DD-1-64	.SPACER -		4
-15	AN833-4D	.ELBOW -		1
	AN6289D4	.NUT -		1
	AN6290-4	.GASKET -		1
	AN6291-4	.RING -		1
-16	170-61029-955	.LINE ASSY - PRESSURE GAUGE TO CROSS		1
-17	AN6287-1	.VALVE ASSY - 3/4-IN. HEXAGON HIGH PRESSURE AIR		1
-18	170-61033	.FITTING - .50 CAL NOSE GUN PNEU CHARGER AIR BOTTLE FILLER VALVE		1
-19	AN515-8R10	.SCREW -		2
	NAS43DD-3-12	.SPACER -		2
-20	AN833-4D	.ELBOW -		1
	AN6289D4	.NUT -		1
	AN6290-4	.GASKET -		1
	AN6291-4	.RING -		1
-21	170-61029-951	.LINE ASSY - FILLER VALVE TO CROSS		1
	AN742D4	.CLAMP -		1
	AN520-10R7	.SCREW -		1
	AN960D10L	.WASHER -		1
	AN365-1032	.NUT -		1
-22	870491	.RESERVOIR ASSY - 1500 PSI INVERTED MOUNTING 205-CU/IN (KCI)		1
	84K0273	..FITTING - (KCI) (PNEU SYSTEM WITH DRAIN)		1
	203867	..PLUG - (KCI) (MOISTURE DRAIN)		1
-23	WWD-180	.CLAMP - (WIT)(GUN PNEU CHARGER AIR BOTTLE)		2
-24	AN832-4D	.UNION -		1
	AN6289D4	.NUT -		1

FIGURE AND INDEX NUMBER	GROUP	ARMAMENT EQUIPMENT	CODE	UNITS PER ASSY
	MAJOR ASSEMBLY	.50 CALIBER NOSE GUN PNEUMATIC CHARGING		
	PART NUMBER	1234567 NOMENCLATURE		
299 -	AN6290-4	•GASKET -		2
	AN6291-4	•RING -		1
-25	AN926-4D	•TEE -		1
	AN6291-4	•RING -		1
	AN6290-4	•GASKET -		1
	AN6227B7	•PACKING -		2
-26	MC1600-17-5	•RELIEF-VALVE - PNEUMATIC (MCM)		1
		OR		
	MC1613-1750	•RELIEF-VALVE - PNEUMATIC (MCM)		
-27	AN833-4D	•ELBOW -		1
	AN6289D4	•NUT -		1
-28	170-61029-9	•LINE ASSY - AIR BOTTLE TO CROSS		1
-29	AN833-4D	•ELBOW -		1
	AN6289D4	•NUT -		1
	AN6290-4	•GASKET -		1
	AN6291-4	•RING -		1
-30	124-D-100-5	•REGULATOR - HIGH PRESSURE PNEUMATIC (CCT)		1
-31	170-61035	•SHIM - GUN PNEU CHARGER PRESSURE REGULATOR	001-100	1
	170-61035	•SHIM - GUN PNEU CHARGER PRESSURE REGULATOR	101-	2
-32	AN74-5	•BOLT -		3
	AN960D416	•WASHER -		3
-33	AN893-2D	•BUSHING -		1
	AN6227B9	•PACKING -		1
-34	AN833-4D	•ELBOW -		2
	AN6289D4	•NUT -		2
	AN6290-4	•GASKET -		2
	AN6291-4	•RING -		2
-35	170-61029-957	•LINE ASSY - AIR BOTTLE TO PRESS. REGULATOR		1
-36	170-61029-953	•LINE ASSY - PRESSURE REGULATOR TO TEE		1
-37	AN824-4D	•TEE -		1
-38	170-61029-959	•LINE ASSY - PRESSURE REGULATOR BHD STA 53		1
	AN742D4	•CLAMP -		2
	AN520-10R7	•SCREW -		2
	AN960D10L	•WASHER -		2
	AN365-1032	•NUT -		2
-39	AN832-4D	•UNION -		1
	AN6289D4	•NUT -		1
	AN960D716	•WASHER -		1
-40	170-61029-965	•LINE ASSY - BHD STA 53 PORT SIDE TO STBD		1
	AN742D4	•CLAMP -		3
	AN520-10R7	•SCREW -		3
	AN960D10L	•WASHER -		3
	AN365-1032	•NUT -		3
-41	AN832-4D	•UNION -		1
	AN924-4D	•NUT -		1
	AN960D716	•WASHER -		1
-42	170-61029-25	•LINE ASSY - BHD STA 53 TO STA 83 (PORT)		1
	AN742D4	•CLAMP -		2
	AN520-10R7	•SCREW -		1
	AN3-7A	•BOLT -		1
	NAS43DD-3-32	•SPACER -		1
	AN960D10L	•WASHER -		2
	AN365-1032	•NUT -		2
-43	AN833-4D	•ELBOW -		1
	AN924-4D	•NUT -		1
	AN960D716	•WASHER -		1
-44	170-61029-975	•LINE ASSY - BHD STA 84 TO STA 109 (PORT)		1
		(AS PER EO 05-5E-6A/95)		
-45	AN832-4D	•UNION - (AS PER EO 05-5E-6A/95)		1
	AN924-4D	•NUT -		1
	AN960D716	•WASHER -		2
-46	170-61029-977	•LINE ASSY - BHD STA 109 TO MANIFOLD (PORT)		1
		(AS PER EO 05-5E-6A/95)		
	AN742D4	•CLAMP -		4

FIGURE AND INDEX NUMBER	GROUP / MAJOR ASSEMBLY / PART NUMBER	ARMAMENT EQUIPMENT / .50 CALIBER NOSE GUN PNEUMATIC CHARGING / 1234567 NOMENCLATURE	CODE	UNITS PER ASSY
299 -	AN520-10R7	•SCREW -		2
	AN960D10L	•WASHER -		2
	AN365-1032	•NUT -		2
-47	170-61029-961	•LINE ASSY - BHD STA 63 TO UNION STA 72		1
	AN815-4D	•UNION -		1
	AN742D6C	•CLAMP -		1
	AN520-10R7	•SCREW -		1
	AN960-10L	•WASHER -		1
	AN365-1032	•NUT -		1
-48	170-61029-29	•LINE ASSY - BHD STA 84 TO PRESS• REGULATOR		1
	AN742D4	•CLAMP -		2
	AN520-10R7	•SCREW -		2
	AN960D10L	•WASHER -		2
	AN365-1032	•NUT -		2
-49	AN833-4D	•ELBOW -		1
	AN924-4D	•NUT -		1
	AN960D716	•WASHER -		1
-50	170-61029-973	•LINE ASSY - MANIFOLD TO BHD STA 84 (STBD) (AS PER EO 05-5E-6A/95)		1
	AN742D4	•CLAMP -		5
	AN520-10R7	•SCREW -		3
	AN960D10L	•WASHER -		3
	AN365-1032	•NUT -		3
-51	170-54099-951	•CLIP - •50 CALIBRE GUN PNEU CHARGER PLUG		2
-52	AN3-4A	•BOLT -		4
	AN960D10	•WASHER -		4
	AN365-1032	•NUT -		6
-53	13B-79011-1	•BRACKET ASSY - •50 CAL GUN PNEU CHARGING SYS C2 VALVE MOUNTING (PORT) (AS PER EO 05-5E-6A/95)		1
	13B-79011-2	•BRACKET ASSY - •50 CAL GUN PNEU CHARGING SYS C2 VALVE MOUNTING (STARBOARD) (AS PER EO 05-5E-6A/95)		1
-54	AN3-4A	•BOLT -		8
	AN960D10	•WASHER -		8
	AN365-1032	•NUT -		4
-55	871357	•VALVE - (KCI) (TYPE C2 PNEUMATIC)		2
-56	13B-79010-2	•MANIFOLD - •50 CAL GUN PNEUMATIC CHARGING C2 VALVE (STARBOARD) (AS PER EO 05-5E-6A/95)		1
	13B-79010-1	•MANIFOLD - •50 CAL GUN PNEU CHARGER C2 VALVE (PORT) (AS PER EO 05-5E-6A/95)		1
	AN6289D6	•NUT -		2
	AN6290-6	•GASKET -		2
	AN6291-6	•RING -		2
-57	AN3-16A	•BOLT -		4
	AN960D10	•WASHER -		4
-58	AN815-3D	•UNION -		4
	AN6290-3	•GASKET -		4
-59	AN833-3D	•ELBOW - (AS PER EO 05-5E-6A/95)		2
	AN6289D3	•NUT -		2
	AN6290-3	•GASKET -		2
	AN6291-3	•RING -		2
-60	13B-79012	•ELBOW - •50 CAL NOSE GUN PNEU CHARGING SYS C2 VALVE (AS PER EO 05-5E-6A/95)		2
	AN6289D6	•NUT -		2
	AN6290-6	•GASKET -		2
	AN6291-6	•RING -		2
-61	AN833-4D	•ELBOW - (STBD SIDE)(AS PER EO 05-5E-6A/95)		1
	AN837-4D	•ELBOW - (PORT SIDE)(AS PER EO 05-5E-6A/95)		1
	AN6290-4	•GASKET -		2
-62	AN6271-3-19	•HOSE ASSY - HYD & PNEU DETACHABLE END SWIVEL FITTING		6
-63	MS21919DG7	•CLAMP - (PORT) (AS PER EO 05-5E-6A/145)		1

FIGURE AND INDEX NUMBER	GROUP / MAJOR ASSEMBLY / PART NUMBER	ARMAMENT EQUIPMENT / .50 CALIBER NOSE GUN PNEUMATIC CHARGING / 1234567 NOMENCLATURE	CODE	UNITS PER ASSY
299 -63	AN500A10-7	•SCREW - (PORT) (AS PER EO 05-5E-6A/149)		1
-64	219-1020-3	•PLUG ASSY - (AFP) (GUN PNEUMATIC CHARGER)		6
		OR		
	25K003	•PLUG ASSY - (KCI) (GUN PNEUMATIC CHARGER)		
		OR		
	25K003M	•PLUG ASSY - (KCI) (GUN PNEUMATIC CHARGER)		
-65	170-61025	BRACKET - GUN CHARGER AIR BOTTLE (SEE SECTION 3)		REF
-66	170-61026	BRACKET ASSY - GUN CHARGER COMPRESSOR SUP• (SEE SECTION 3)		REF
		-000-		

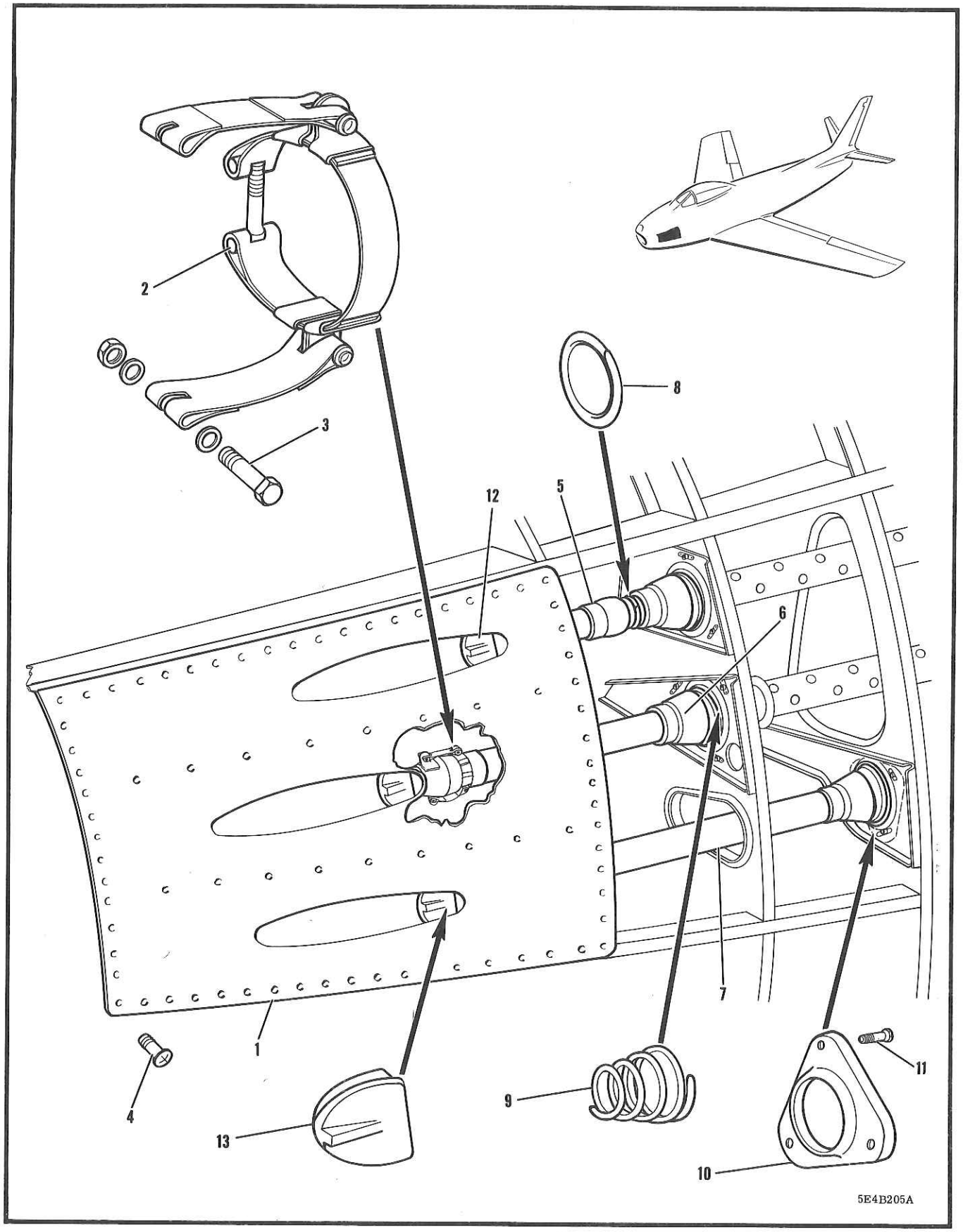

FIGURE 300 GUN OPEN PORT BLAST PANEL

FIGURE AND INDEX NUMBER	GROUP ARMAMENT EQUIPMENT MAJOR ASSEMBLY GUN OPEN PORT BLAST PANEL PART NUMBER	1234567 NOMENCLATURE	CODE	UNITS PER ASSY
300 -	161-61033	PANEL INSTL - GUN OPEN PORT BLAST (SEE FIG. 298)		NP
	151-61180-1	.PANEL ASSY - GUN OPEN PORT BLAST PORT SIDE		1
	151-61180-2	.PANEL ASSY - GUN OPEN PORT BLAST STBD SIDE		1
- 1	151-61180-3	..PANEL - GUN OPEN PORT BLAST PORT SIDE		1
	151-61180-4	..PANEL - GUN OPEN PORT BLAST STBD SIDE		1
- 2	43537-SH	..SUPPORT - T-BOLT SPECIAL TAPER BAND (APC) (GUN PORT NO. 2 & 3 STARBOARD)		2
	43538-SH	..SUPPORT - T-BOLT SPECIAL TAPER BAND (MPC) (GUN PORT NO. 2 & 3 PORT SIDE)		2
- 3	AN4-12A	..BOLT - (BLAST TUBE TO PANEL ATTACHING)		4
	AN960-416	..WASHER -		8
	AN365-428	..NUT -		4
- 4	AN509-10R9	.SCREW - (PANEL ATTACHING)		156
- 5	140-61173	.TUBE ASSY - GUN BARREL BLAST (UPPER)		2
- 6	152-61174-5	.TUBE ASSY - GUN BARREL BLAST (CENTRE)		2
- 7	152-61175-5	.TUBE ASSY - GUN BARREL BLAST (LOWER)		2
- 8	149-61078	..RING - GUN BLAST TUBE RETAINING		1
- 9	140-61177	.SPRING - GUN BLAST TUBE RETAINING		6
-10	140-61155	.RETAINER - GUN BLAST TUBE SPRING		6
-11	AN4-4A	.BOLT -		17
-12	151-61172	.PLUG - GUN BLAST SEAL (EXPANDABLE) (UPPER)		2
-13	151-61196	.PLUG - .50 CAL GUN PORT SEAL (EXPANDABLE) (CENTRE & LOWER)		4
		-000-		

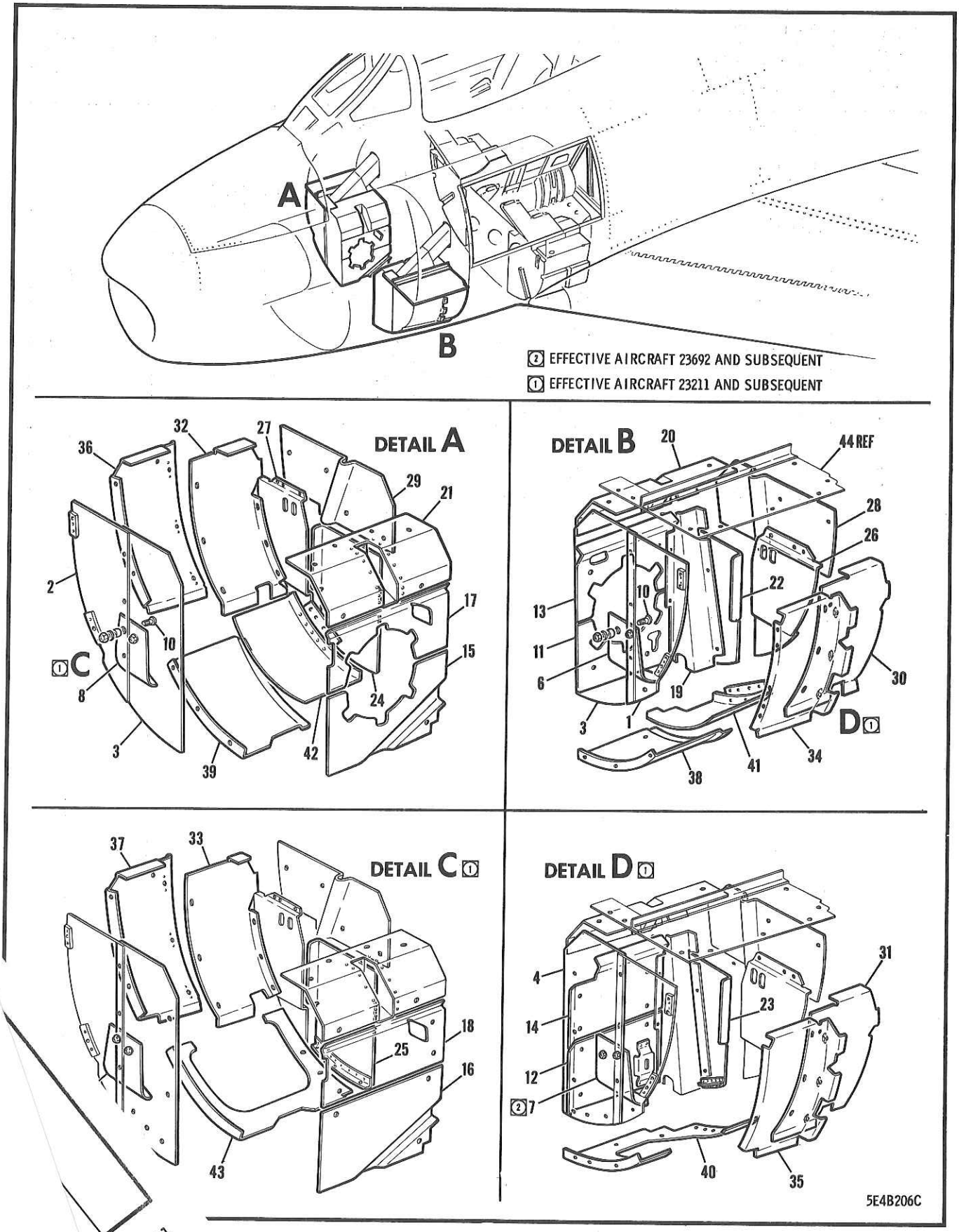

1241

TURE 301 .50 CALIBRE SHELL CASE & LINK EJECTION LINER

FIGURE AND INDEX NUMBER	GROUP / MAJOR ASSEMBLY / PART NUMBER	ARMAMENT EQUIPMENT / .50 CALIBER SHELL CASE & LINK EJECTION LINER / 1234567 NOMENCLATURE	CODE	UNITS PER ASSY
301 -	151-61074	LINER INSTL - .50 CAL CASE & LINK EJECTION COMPARTMENT (SEE SECTION 3)	001-210	NP
	151-61074-800	LINER INSTL - .50 CAL CASE & LINK EJ COMPT	211-	NP
- 1	151-61035-1	.LINER ASSY - .50 CAL CASE & LINK EJECTION FUS STA 71 OUTBOARD (PORT SIDE)		1
- 2	151-61035-2	.LINER ASSY - .50 CAL CASE & LINK EJECTION FUS STA 71 OUTBOARD (STARBOARD SIDE)		1
	AN515-6R8	.SCREW -		4
	AN960D6	.WASHER -		8
	AN365-632	.NUT -		4
- 3	151-61036	.LINER - .50 CAL CASE & LINK EJECTION FUSELAGE STA 71 INBOARD	001-210	2
	AN515-6R8	.SCREW -	001-210	6
	AN960-6	.WASHER -	001-210	12
	AN365-632	.NUT -	001-210	6
- 4	151-61036-1	.LINER - .50 CAL CASE & LINK EJECTION FUSELAGE STA 71 INBOARD (PORT SIDE)	211-	1
	AN515-8R8	.SCREW -	211-	3
	AN515-8R10	.SCREW -	211-	2
	2W18-8L	.WASHER - FLAT (NAA)	211-	5
- 5	151-61036-2	.LINER - .50 CAL CASE & LINK EJECTION FUSELAGE STA 71 INBOARD (STBD SIDE)	211-	1
	AN515-8R8	.SCREW -	211-	2
	AN515-8R10	.SCREW -	211-	2
	2W18-8L	.WASHER - FLAT (NAA)	211-	4
	AN365-832	.NUT -	211-	1
	13-30013-1	.BAFFLE INSTL - FORWARD CASE & LINK EJECTION COMPARTMENT (PORT SIDE)	001-691	NP
	13-30014-2	.BAFFLE INSTL - FORWARD CASE & LINK EJECTION COMPARTMENT (PORT SIDE)	692-	NP
	13-30013-2	.BAFFLE INSTL - FORWARD CASE & LINK EJECTION COMPARTMENT (STBD SIDE)	001-691	NP
	13-30014-3	.BAFFLE INSTL - FORWARD CASE & LINK EJECTION COMPARTMENT (STBD SIDE)	692-	NP
- 6	13-30013-6	..BAFFLE - FORWARD CASE & LINK EJECTION COMPT (PORT SIDE) (EO 05-5E-6A/192)	001-691	1
- 7	13-30014-4	..BAFFLE - FORWARD CASE & LINK EJECTION COMPARTMENT (PORT SIDE)	692-	1
- 8	13-30013-7	..BAFFLE - FORWARD CASE & LINK EJECTION COMPT (STBD SIDE) (EO 05-5E-6A/192)	001-691	1
- 9	13-30014-5	..BAFFLE - FORWARD CASE & LINK EJECTION COMPT (STBD SIDE)(EO 05-5E-6A/20)	692-	1
-10	AN526-1032-9	..SCREW - (AS PER EO 05-5E-6A/20)		2
	NAS43DD3-14	..SPACER - (AS PER EO 05-5E-6A/20)		2
	AN960-10	..WASHER - (AS PER EO 05-5E-6A/20)		2
	AN365-1032	..NUT - (AS PER EO 05-5E-6A/20)		2
-11	151-61042	.LINER - .50 CAL CASE & LINK EJECTION INTERNAL WEB STA 71-84 LOWER (PORT)		1
	AN515-6R7	.SCREW -	001-210	2
	AN960-6	.WASHER -	001-210	4
	AN365-632	.NUT -	001-210	2
-12	151-61042-10	.LINER ASSY - .50 CAL CASE & LINK EJECTION INTERNAL WEB STA 71-84 LOWER (PORT)	211-	1
	AN515-8R7	.SCREW -	211-	4
	2W18-8L	.WASHER - FLAT (NAA)	211-	4
-13	151-61043	.LINER - .50 CAL CASE & LINK EJECTION INTERNAL WEB STA 71-84 UPPER (PORT)	001-210	1

FIGURE AND INDEX NUMBER	GROUP ARMAMENT EQUIPMENT MAJOR ASSEMBLY .50 CALIBRE SHELL CASE & LINK EJECTION LINER		CODE	UNITS PER ASSY
	PART NUMBER	1234567 NOMENCLATURE		
301 -	AN515-6R7	•SCREW -	001-210	3
	AN960-6	•WASHER -	001-210	6
	AN365-632	•NUT -	001-210	3
-14	151-61043-3	•LINER - •50 CAL CASE & LINK EJECTION INTERNAL WEB STA 71-84 UPPER (PORT)	211-	1
	AN515-8R7	•SCREW -	211-	3
	2W18-8L	•WASHER - FLAT (NAA)	211-	3
-15	151-61045	•LINER - •50 CAL CASE & LINK EJECTION INTERNAL WEB STA 71-84 LOWER (STBD)	001-210	1
	AN515-6R7	•SCREW -	001-210	3
	AN960-6	•WASHER -	001-210	6
	AN365-632	•NUT -	001-210	3
-16	151-61045-3	•LINER - .50 CAL CASE & LINK EJECTION INTERNAL WEB STA 71-84 LOWER (STBD)	211-	1
	AN515-8R7	•SCREW -	211-	4
	2W18-8L	•WASHER - FLAT (NAA)	211-	4
	AN365-832	•NUT -	211-	1
-17	151-61046	•LINER - .50 CAL CASE & LINK EJECTION INTERNAL WEB STA 71-84 UPPER (STBD)	001-210	1
	AN515-6R7	•SCREW -	001-210	3
	AN960-6	•WASHER -	001-210	6
	AN365-632	•NUT -	001-210	3
-18	151-61046-3	•LINER - .50 CAL CASE & LINK EJECTION INTERNAL WEB STA 71-84 UPPER (STBD)	211-	1
	AN515-8R7	•SCREW -	211-	3
	2W18-8L	•WASHER - FLAT (NAA)	211-	3
-19	151-61044	•LINER - •50 CAL CASE & LINK EJECTION INTERNAL WEB CHANNEL (PORT SIDE)		1
	AN515-6R7	•SCREW -		2
	AN515-6R8	•SCREW -		2
	AN960D6	•WASHER -		8
	AN365-632	•NUT -		4
-20	151-61047	•LINER ASSY - •50 CAL CASE & LINK EJECTION AMO COMPT FLOOR TO INT WEB (PORT)		1
	AN515-6R7	•SCREW -	001-210	5
	AN515-8R7	•SCREW -	211-	5
	AN960-6	•WASHER -	001-210	10
	2W18-8L	•WASHER - FLAT (NAA)	211-	2
	AN365-632	•NUT -	001-210	5
-21	151-61048	•LINER ASSY - •50 CAL CASE & LINK EJECTION AMO COMPT FLOOR TO INT WEB (STBD)		1
	AN515-6R7	•SCREW -	001-210	6
	AN515-8R7	•SCREW -	211-	5
	AN960D6	•WASHER -	001-210	12
	2W18-8L	•WASHER - FLAT (NAA)	211-	2
	AN365-632	•NUT -	001-210	6
-22	151-61038	•LINER - •50 CAL CASE & LINK EJECTION STA 84 LOWER INBOARD (PORT SIDE)	001-210	1
-23	151-61038-10	•LINER ASSY - •50 CAL CASE & LINK EJECTION STA 84 LOWER INBOARD (PORT SIDE)	211-	1
-24	151-61039	•LINER - •50 CAL CASE & LINK EJECTION STA 84 LOWER INBOARD (STBD SIDE)	001-210	1
-25	151-61039-10	•LINER ASSY - •50 CAL CASE & LINK EJECTION STA 84 LOWER INBOARD (STBD SIDE)	211-	1
	AN515-6R7	•SCREW -		2
	AN960D6	•WASHER -		4
	AN365-632	•NUT -		2
-26	151-61037-1	•LINER ASSY - •50 CAL CASE & LINK EJECTION STA 84 LOWER OUTBOARD (PORT SIDE)		1
-27	151-61037-2	•LINER ASSY - •50 CAL CASE & LINK EJECTION STA 84 LOWER OUTBOARD (STBD SIDE)		1

FIGURE AND INDEX NUMBER	GROUP ARMAMENT EQUIPMENT MAJOR ASSEMBLY .50 CALIBRE SHELL CASE & LINK EJECTION LINER		CODE	UNITS PER ASSY
	PART NUMBER	1234567 NOMENCLATURE		
301 -	AN515-6R8	•SCREW -		4
	AN960D6	•WASHER -		8
	AN365-632	•NUT -		4
-28	151-61040	•LINER - •50 CAL CASE & LINK EJECTION STA 84 UPPER (PORT SIDE)		1
-29	151-61041	•LINER - •50 CAL CASE & LINK EJECTION STA 84 UPPER (STARBOARD SIDE)		1
	AN515-6R8	•SCREW -		8
	AN960D6	•WASHER -		16
	AN365-632	•NUT -		8
-30	151-61051-1	•LINER - •50 CAL CASE & LINK EJECTION SKIN REAR UPPER (PORT SIDE)	001-210	1
-31	191-61121-1	•LINER - •50 CAL CASE & LINK EJECTION SKIN REAR UPPER (PORT SIDE)	211-	1
-32	151-61051-2	•LINER - •50 CAL CASE & LINK EJECTION SKIN REAR UPPER (STARBOARD SIDE)	001-210	1
-33	191-61121-2	•LINER - •50 CAL CASE & LINK EJECTION SKIN REAR UPPER (STARBOARD SIDE)	211-	1
	NAS221-9	•SCREW -		12
	AN960-10	•WASHER -	001-210	24
	2W18-10L	•WASHER - FLAT (NAA)	211-	12
	AN365-632	•NUT -	001-210	12
-34	151-61050-7	•LINER ASSY - •50 CAL CASE & LINK EJECTION SKIN FORWARD UPPER (PORT SIDE)	001-210	1
-35	191-61120-1	•LINER ASSY - •50 CAL CASE & LINK EJECTION SKIN FORWARD UPPER (PORT SIDE)	211-	1
	AN515-6R10	•SCREW -	001-210	6
	AN515-6R8	•SCREW -	001-210	2
	AN515-8R10	•SCREW -	211-	4
	AN960-6	•WASHER -	001-210	10
	2W18-8L	•WASHER - FLAT (NAA)	211-	4
	AN365-632	•NUT -	001-210	8
-36	151-61050-8	•LINER ASSY - •50 CAL CASE & LINK EJECTION FORWARD UPPER (STARBOARD SIDE)	001-210	1
-37	191-61120-2	•LINER ASSY - •50 CAL CASE & LINK EJECTION FORWARD UPPER (STARBOARD SIDE)	211-	1
	AN515-6R10	•SCREW -	001-210	6
	AN515-8R10	•SCREW -	211-	2
	AN960-6	•WASHER -	001-210	10
	2W18-8L	•WASHER - FLAT (NAA)	211-	2
	AN365-632	•NUT -	001-210	8
-38	151-61052-1	•LINER - •50 CAL CASE & LINK EJECTION SKIN FORWARD LOWER (PORT SIDE)	001-210	1
-39	151-61052-2	•LINER - •50 CAL CASE & LINK EJECTION SKIN FORWARD LOWER (STARBOARD SIDE)	001-210	1
	AN515-6R8	•SCREW -	001-200	12
	AN960D6	•WASHER -	001-200	24
	AN365-632	•NUT -	001-210	12
-40	191-61122	•LINER ASSY - •50 CAL CASE & LINK EJECTION SKIN LOWER (PORT SIDE)	211-	1
	AN515-8R10	•SCREW -	211-	3
	AN515-8R7	•SCREW -	211-	3
	2W18-8L	•WASHER - FLAT (NAA)	211-	6
	AN507-632R14	•SCREW -	211-	2
	2W18-6L	•WASHER - FLAT (NAA)	211-	2
	AN365-632	•NUT -	211-	2
-41	151-61053-1	•LINER ASSY - •50 CAL CASE & LINK EJECTION SKIN REAR LOWER (PORT SIDE)	001-210	1
-42	151-61053-2	•LINER ASSY - •50 CAL CASE & LINK EJECTION SKIN REAR LOWER (STARBOARD SIDE)	001-210	1

FIGURE AND INDEX NUMBER	GROUP ARMAMENT EQUIPMENT MAJOR ASSEMBLY .50 CALIBRE SHELL CASE & LINK EJECTION LINER PART NUMBER	1234567 NOMENCLATURE	CODE	UNITS PER ASSY
301 -	AN515-6R8	•SCREW -	001-210	8
	AN960D6	•WASHER -	001-210	16
	AN365-632	•NUT -	001-210	8
-43	191-61123	•LINER ASSY - •50 CAL CASE & LINK EJECTION SKIN REAR LOWER (STARBOARD SIDE)	211-	1
	AN515-8R10	•SCREW -	211-	3
	AN515-8R7	•SCREW -	211-	3
	2W18-8L	•WASHER - FLAT (NAA)	211-	6
	AN507-632R14	•SCREW -	211-	2
	2W18-6L	•WASHER - FLAT (NAA)	211-	2
-44	176-61035-1	WEB ASSY - CASE & LINK CONTAINER FUSELAGE STA 71-84 (PORT SIDE) (SEE SECT• 3)		REF
		(CONTINUED SEE FIG• 301A)		

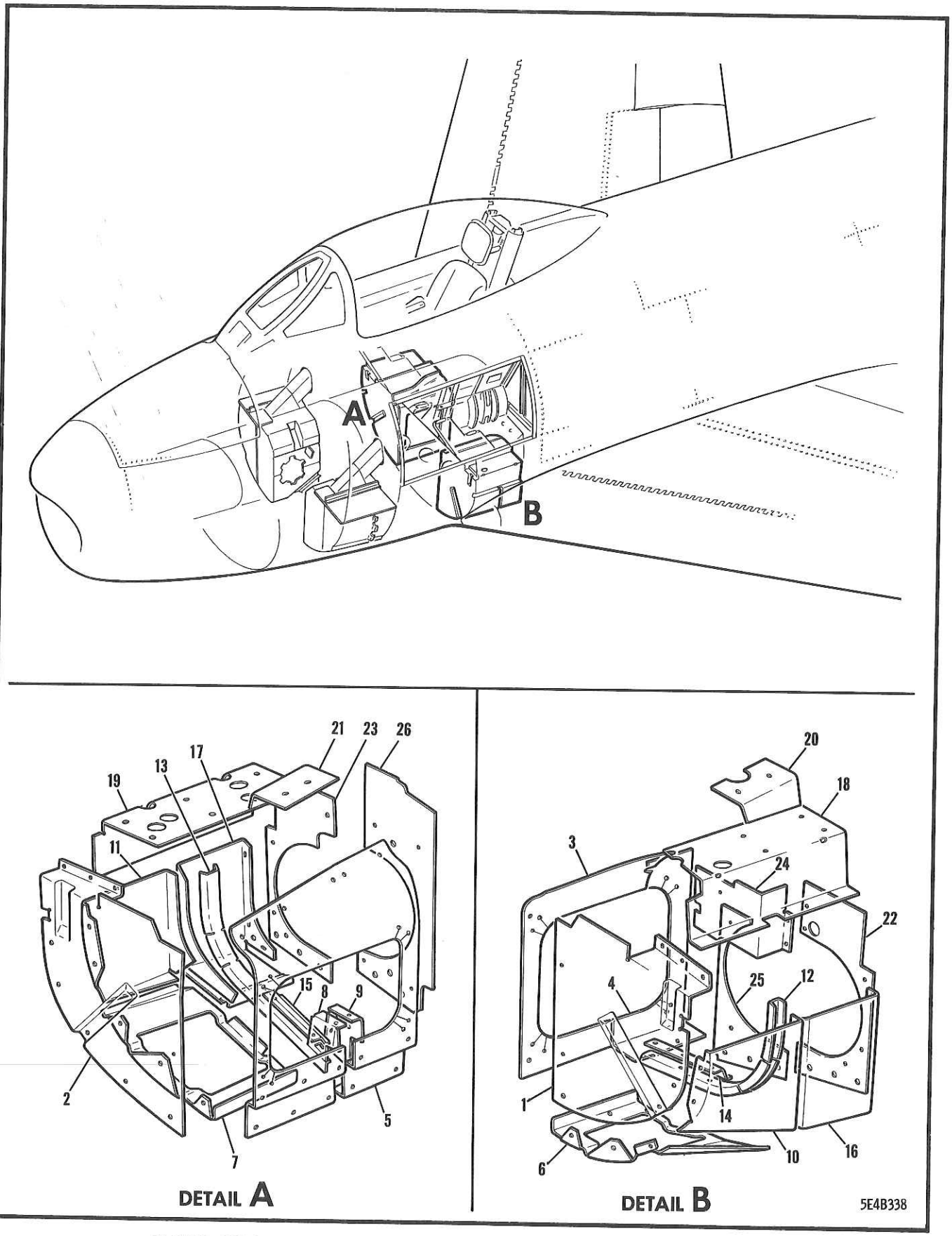

FIGURE 301A .50 CALIBRE REAR SHELL CASE & LINK EJECTION LINER

FIGURE AND INDEX NUMBER	GROUP ARMAMENT EQUIPMENT MAJOR ASSEMBLY .50 CALIBRE REAR SHELL CASE & LINK EJECTION LINER		CODE	UNITS PER ASSY
	PART NUMBER	1234567 NOMENCLATURE		
301A-	151-61074	LINER INSTL - .50 CAL CASE & LINK EJECTION COMPARTMENT (SEE FIG. 301)		REF
- 1	151-61101-1	.LINER - .50 CAL CASE & LINK EJECTION FUS STA 109 FRAME (PORT SIDE)		1
- 2	151-61101-2	.LINER - .50 CAL CASE & LINK EJECTION FUS STA 109 FRAME (STARBOARD SIDE)		1
	XS-49348-K2915	.STUD - PUSH RIVET (UCF)		24
- 3	151-61102	.LINER - .50 CAL CASE & LINK EJECTION WEB FORWARD (PORT SIDE)		1
	XS-49348-K2915	.STUD - PUSH RIVET (UCF)		10
- 4	151-61104	.LINER - .50 CAL CASE & LINK EJECTION WEB REAR (PORT SIDE)		1
	XS-49348-K2915	.STUD - PUSH RIVET (UCF)		4
- 5	151-61103	.LINER - .50 CAL CASE & LINK EJECTION WEB (STARBOARD SIDE)		1
	XS-49348-K2915	.STUD - PUSH RIVET (UCF)		20
- 6	151-61108	.LINER - .50 CAL CASE & LINK EJ FUS STA 109 TO 118 DOOR (PORT SIDE)		1
	AN515-8R9	.SCREW -		6
	AN960-8	.WASHER -		12
	AN365-832	.NUT		6
- 7	151-61109	.LINER - .50 CAL CASE & LINK EJ FUS STA 109 TO 118 DOOR (STARBOARD SIDE)		1
	AN515-8R9	.SCREW -		3
	AN960-8	.WASHER -		6
	AN365-832	.NUT -		3
- 8	151-61098	.LINER - .50 CAL CASE & LINK EJ FUS STA 118 WEB GUSSET REAR (STARBOARD SIDE)		1
- 9	151-61099	.LINER - .50 CAL CASE & LINK EJ FUS STA 118 WEB GUSSET FORWARD (STARBOARD SIDE)		1
	AN515-8R9	.SCREW -		2
	AN960-8	.WASHER -		4
	AN365-832	.NUT -		2
-10	151-61086-1	.LINER - .50 CAL CASE & LINK EJ STA 109-118 UPPER OUTBOARD (PORT SIDE)		1
-11	151-61086-2	.LINER - .50 CAL CASE & LINK EJ STA. 109-118 UPPER OUTBOARD (STARBOARD SIDE)		1
	AN515-8R9	.SCREW -		4
	AN960-8	.WASHER -		8
	AN365-832	.NUT -		4
-12	151-61089-1	.LINER - .50 CAL CASE & LINK EJ FUS STA 118 LOWER FRAME (PORT SIDE)		1
-13	151-61089-2	.LINER - .50 CAL CASE & LINK EJ FUS STA 118 LOWER FRAME (STARBOARD SIDE)		1
	AN515-8R9	.SCREW -		2
	AN960-8	.WASHER -		4
	AN365-832	.NUT -		2
-14	151-61091-1	.LINER - .50 CAL CASE & LINK EJECTION FUS STA 118 FRAME TO ACCESS DOOR (PORT)		1
-15	151-61091-2	.LINER - .50 CAL CASE & LINK EJECTION FUS STA 118 FRAME TO ACCESS DOOR (STBD)		1
	AN515-8R9	.SCREW -		5
	AN960-8	.WASHER -		10
	AN365-832	.NUT -		5
-16	151-61088-1	.LINER ASSY - .50 CAL CASE & LINK EJECTION FUS STA 118-125 OUTBOARD (PORT SIDE)		1
-17	151-61088-2	.LINER ASSY - .50 CAL CASE & LINK EJECTION FUS STA 118-125 OUTBOARD (STBD SIDE)		1
	AN515-8R9	.SCREW -		6
	AN960-8	.WASHER -		12

FIGURE AND INDEX NUMBER	GROUP ARMAMENT EQUIPMENT MAJOR ASSEMBLY .50 CALIBRE REAR SHELL CASE & LINK EJECTION LINER		CODE	UNITS PER ASSY
	PART NUMBER	1234567 NOMENCLATURE		
301A-	AN365-832	•NUT -		6
-18	151-61092-1	•LINER - •50 CAL CASE & LINK EJECTION HOR SHEAR WEB OUTBOARD (PORT SIDE)		1
-19	151-61092-2	•LINER - •50 CAL CASE & LINK EJECTION HOR SHEAR WEB OUTBOARD (STARBOARD SIDE)		1
	AN515-6R10	•SCREW -		8
	AN960-6	•WASHER -		16
	AN365-632	•NUT -		8
-20	151-61100-1	•LINER - •50 CAL CASE & LINK EJECTION CANTED HOR SHEAR WEB (PORT SIDE)	001-210	1
	151-61100-3	•LINER - •50 CAL CASE & LINK EJECTION CANTED HOR SHEAR WEB (PORT SIDE)	211-	1
-21	151-61100-2	•LINER - •50 CAL CASE & LINK EJECTION CANTED HOR SHEAR WEB (STBD SIDE)		1
	AN515-6R8	•SCREW -		4
	AN960-6	•WASHER -		8
	AN365-632	•NUT -		4
-22	151-61094-3	•LINER - •50 CAL CASE & LINK EJECTION FUS STA 125 CANTED FRAME OUTBOARD (PORT)		1
-23	151-61094-6	•LINER - •50 CAL CASE & LINK EJECTION FUS STA 125 CANTED FRAME OUTBOARD (STBD)		1
	AN515-6R7	•SCREW -		5
	AN960-6	•WASHER -		10
	AN365-632	•NUT -		5
-24	151-61093	•LINER - •50 CAL CASE & LINK EJECTION RADIO ACCESS DOOR GEAR-BOX (PORT SIDE)		1
	AN515-8R9	•SCREW -		2
	AN960-8	•WASHER -		4
	AN365-832	•NUT -		2
	NAS43DD3-24	•SPACER -	491-	1
	AN515-8R14	•SCREW -	491-	1
	AN960D8	•WASHER -	491-	1
-25	151-61096	•LINER - •50 CAL CASE & LINK EJECTION FUS STA 125 CANTED FRAME INBOARD (PORT)	001-560	1
	151-61096-800	•LINER - •50 CAL CASE & LINK EJECTION FUS STA 125 CANTED FRAME INBOARD (PORT)	561-	1
-26	151-61097	•LINER - •50 CAL CASE & LINK EJECTION FUS STA 125 CANTED FRAME INBOARD (STBD)		1
	AN515-6R7	•SCREW -		8
	AN960-6	•WASHER -		16
	AN365-632	•NUT -		8

-000-

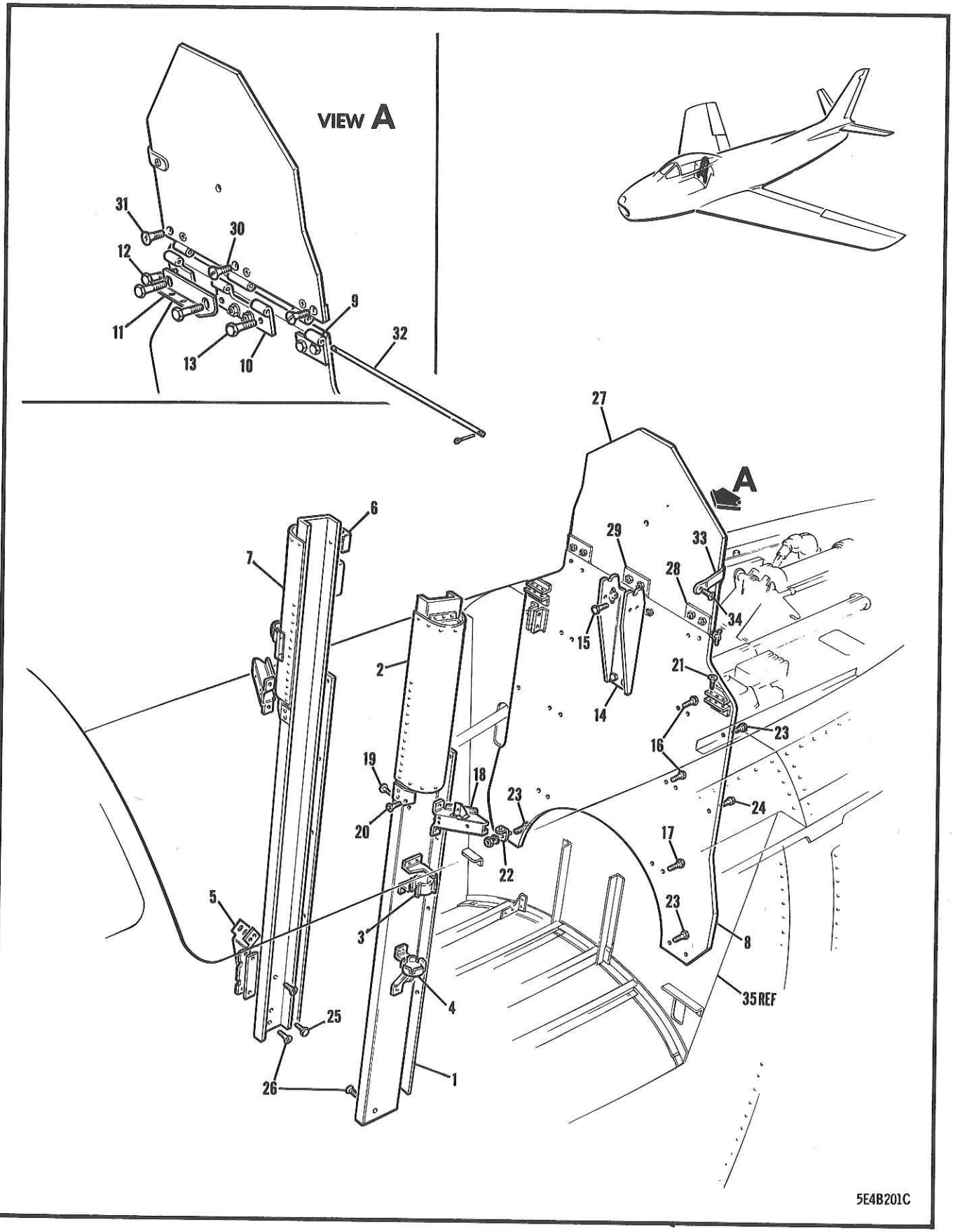

FIGURE 302 PILOT REAR ARMOUR-PLATE

FIGURE AND INDEX NUMBER	GROUP ARMAMENT EQUIPMENT MAJOR ASSEMBLY PILOT REAR ARMOUR-PLATE PART NUMBER	1234567 NOMENCLATURE	CODE	UNITS PER ASSY
302 -	151-73501-70	ARMOUR-PLATE INSTL - PILOT REAR(SEE SECT.3)	001-370	NP
	151-73501-800	ARMOUR-PLATE INSTL - PILOT REAR	371-	NP
- 1	170-53065-1	.RAIL ASSY - EJECTION SEAT GUIDE PORT SIDE	001-370	1
	170-53065-11	.RAIL ASSY - EJECTION SEAT GUIDE PORT SIDE	371-	1
- 2	170-53170-1	..STIFFENER ASSY - EJECTION GUIDE RAIL LH		1
- 3	170-53038	..BRACKET ASSY - DROP MESSAGE CONTAINER		1
- 4	170-53039	..SUPPORT ASSY - DROP MESSAGE CONTAINER		1
	170-53065-2	.RAIL ASSY - EJECTION SEAT GUIDE STBD SIDE	001-370	1
	170-53065-800	.RAIL ASSY - EJECTION SEAT GUIDE STBD SIDE	371-	1
- 5	151-54424	..BRACKET ASSY - INFLATABLE CANOPY SEAL DUMP SWITCH		1
	170-53065-10	..SPACER - (DUMP SWITCH BRACKET)		1
	AN509-10-12	..SCREW -		2
	AN960-10	..WASHER -		2
	AN365-1032	..NUT -		2
- 6	13B-83014	..BRACKET - DISTRESS SIGNAL SWITCH MOUNTING (AS PER EO 05-5E-6A/113)		1
- 7	170-53170-800	..STIFFENER ASSY - EJECTION SEAT GUIDE RAIL RH (AS PER EO 05-5E-6A/113)	001-370	1
	176-31869-800	..SUPPORT ASSY - COCKPIT ENCLOSURE CANOPY EJECTION INITIATOR FUSELAGE STA 115	371-	1
	170-53170-800	..STIFFENER ASSY - EJECTION SEAT GUIDE RAIL (AS PER EO 05-5E-6A/113)	371-	1
	172-31892	...BRACKET ASSY - CANOPY EJECTION GUN INITIATOR SUPPORTING		1
- 8	152-73521	.ARMOUR-PLATE ASSY - PILOT REAR FUS STA 118		1
- 9	151-73512-3	..HINGE - PILOT HEAD ARMOUR-PLATE LH		1
	151-73512-4	..HINGE - PILOT HEAD ARMOUR-PLATE RH		1
-10	151-73512-5	..HINGE - PILOT HEAD ARMOUR-PLATE CENTRE		1
-11	151-54420	.ANGLE - CANOPY ELECTRICAL CLOSED L/SW		1
-12	AN6-7A	.BOLT -		4
	2W1-24-18-42	.WASHER - PLAIN (NAA)		4
	AN364-624	.NUT -		4
-13	AN5-7A	.BOLT -		2
	AN960-416	.WASHER -		2
	AN365-524	.NUT -		2
-14	151-53066	.BRACKET ASSY - PILOT EJECTION SEAT GUN		1
-15	AN4-10A	.BOLT -		4
	2W1R16-24-93	.WASHER - PLAIN (NAA)	001-444	2
	2W1V16-24-93	.WASHER - PLAIN (NAA)	445-	2
	AN960-416	.WASHER -		4
	AN365-428	.NUT -		4
-16	AN4-11A	.BOLT -		8
	2W1R16-24-93	.WASHER - PLAIN (NAA)	001-444	8
	2W1V16-24-93	.WASHER - PLAIN (NAA)	445-	8
	AN960-416	.WASHER -		8
	AN365-428	.NUT -		8
-17	AN4-10A	.BOLT -		4
	AN960-416	.WASHER -		4
	2W1R16-24-93	.WASHER - PLAIN (NAA)	001-444	4
	2W1V16-24-93	.WASHER - PLAIN (NAA)	445-	4
	AN365-428	.NUT -		4
-18	151-31194-1	.BRACKET ASSY - RAIL SUPPORT LH FUS STA 118		1
	151-31194-2	.BRACKET ASSY - RAIL SUPPORT RH FUS STA 118		1
-19	AN509-10-11	.SCREW -		4
	AN960-10	.WASHER -		4
	AN365-1032	.NUT -		4
-20	NAS221-9	.SCREW -		2
	AN960-10	.WASHER -		2
-21	NAS220-7	.SCREW -		10

FIGURE AND INDEX NUMBER	GROUP ARMAMENT EQUIPMENT MAJOR ASSEMBLY PILOT REAR ARMOUR-PLATE PART NUMBER	1234567 NOMENCLATURE	CODE	UNITS PER ASSY
302 -	NAS220-8	•SCREW -		2
	AN365-832	•NUT -		12
-22	13A-50020	•BRACKET - ELECTRICAL CLAMP MOUNTING	021-	1
-23	AN4-6A	•BOLT -		5
-24	AN4-7A	•BOLT -		2
	2W1R16-24-93	•WASHER - PLAIN (NAA)	001-444	7
	2W1V16-24-93	•WASHER - PLAIN (NAA)	445-	7
	AN960-416	•WASHER -		13
	AN365-428	•NUT -		11
-25	AN3-6A	•BOLT -		1
-26	AN509-10-12	•SCREW -		7
	170-53028-1	•SHIM - EJECTION SEAT GUIDE RAIL (LH)		AR
	170-53028-3	•SHIM - EJECTION SEAT GUIDE RAIL (LH)		AR
	170-53028-2	•SHIM - EJECTION SEAT GUIDE RAIL (RH)		AR
	170-53028-4	•SHIM - EJECTION SEAT GUIDE RAIL (RH)		AR
	AN960-10	•WASHER -		8
	AN365-1032	•NUT -		8
-27	151-73507	•ARMOUR-PLATE ASSY - PILOT HEAD	001-370	1
	151-73507-800	•ARMOUR-PLATE ASSY - PILOT HEAD	371-	1
-28	151-73507-5	••HINGE - PILOT HEAD ARMOUR-PLATE LH		1
	151-73507-6	••HINGE - PILOT HEAD ARMOUR-PLATE RH		1
-29	151-73507-7	••HINGE - PILOT HEAD ARMOUR-PLATE CENTRE		1
-30	AN509-516-13	•SCREW -		2
-31	AN509-516-16	•SCREW -		4
	AN365-524	•NUT -		6
-32	151-73509	•HINGE-PIN - PILOT HEAD ARMOUR		1
	AN380-2-2	•COTTER-PIN -		2
-33	151-73553	•BRACKET - PILOT HEAD ARMOUR-PLATE RTNG		1
-34	NAS221-10	•SCREW -		1
	AN515-6R12	•SCREW -		1
	AN365-632	•NUT -		1
-35	152-31138-300	BULKHEAD ASSY - FUSELAGE STA 118 CANTED (SEE SECTION 3)		REF

-000-

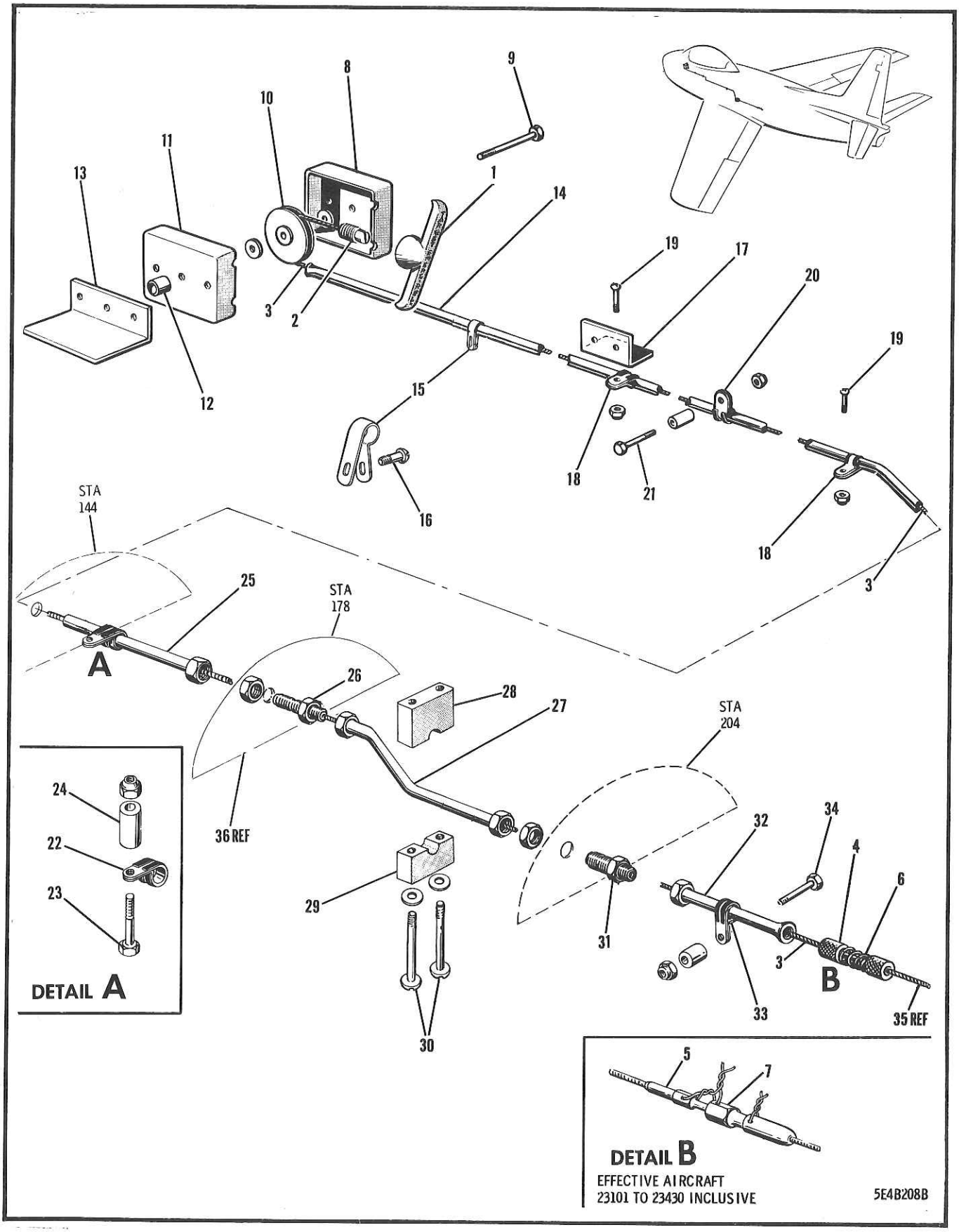

FIGURE 303 TOW TARGET FORWARD RELEASE EQUIPMENT
(EFFECTIVE AIRCRAFT 23001 TO 23430 INCL)

FIGURE AND INDEX NUMBER	GROUP ARMAMENT EQUIPMENT MAJOR ASSEMBLY TOW TARGET FORWARD RELEASE EQUIPMENT PART NUMBER	1234567 NOMENCLATURE	CODE	UNITS PER ASSY
303 -	13-96007-20	TARGET RELEASE EQUIPMENT INSTL - TOW (SEE FIG. 1)	001-430	NP
- 1	13-96054	•HANDLE - TOW TARGET EMERGENCY RELEASE (MAKE FROM 170-68730)	001-430	1
- 2	13-96057	•RETAINER - TOW TARGET FORWARD CABLE	001-430	1
	13-96058-20	•CABLE ASSY - TOW TARGET FORWARD	001-100	1
	13-96058-10	•CABLE ASSY - TOW TARGET FORWARD	101-430	1
- 3	13-96058-7	••CABLE - TOW TARGET FORWARD	001-100	1
	13-96058-5	••CABLE - TOW TARGET FORWARD	101-430	1
	AN664C2	••TERMINAL -	001-430	1
- 4	RA-2494-2	••TERMINAL - BALL WITH DOUBLE-SHANK (ACC)	001-100	1
- 5	AN669S2RH	••TERMINAL -	001-430	1
- 6	RA-2258-2	•TERMINAL - DOUBLE-SHANK BALL-TYPE (ACC)	001-100	1
- 7	13-96071	•QUICK-DISCONNECT ASSY- TOW TARGET MAN. REL	101-430	1
	13-96068	••QUICK-DISCONNECT - TOW TARGET MANUAL RELEASE ADJUSTABLE	101-430	1
	13-96067	••QUICK-DISCONNECT SLEEVE - TOW TARGET MANUAL RELEASE ADJUSTABLE	101-430	1
- 8	13-96056-5	•BOX - TOW TARGET PULLEY	001-430	1
- 9	AN3H7A	•BOLT -	001-430	3
	AN960D10	•WASHER -	001-430	2
-10	AN210-1B	•PULLEY -	001-430	1
-11	13-96056-3	•BOX - TOW TARGET PULLEY	001-430	1
-12	NAS43DD-3-8	•SPACER -	001-430	3
-13	13-96060-5	•SUPPORT - PULLEY BOX TOW TARGET	001-430	1
-14	13-96055-103	•TUBE - PULLEY BOX TO FUSELAGE STA 144 TOW TARGET CABLE	001-430	1
-15	13-96072	•CLAMP - EMERGENCY TOW TARGET RELEASE CABLE CASING SUPPORT (STA 110)	001-430	1
-16	AN520-10R8	•SCREW -	001-430	1
-17	13-96007-5	•ANGLE - TOW TARGET RELEASE	001-430	1
-18	AN742D4	•CLAMP -	001-430	2
-19	AN520-10R8	•SCREW -	001-430	2
	AN365-1032	•NUT -	001-430	2
-20	AN742D4	•CLAMP -	001-430	1
-21	AN3-12A	•BOLT -	001-430	1
	NAS43DD-3-46	•SPACER -	001-430	1
	AN365-1032	•NUT -	001-430	1
-22	AN742D4	•CLAMP -	001-430	1
-23	AN4-24	•BOLT -	001-430	1
-24	NAS43DD-4-56	•SPACER -	001-430	1
	AN960D10L	•WASHER -	001-430	2
	AN365-428	•NUT -	001-430	1
-25	13-96055-5	•CASING ASSY - FUSELAGE STA 144-178 TOW TARGET CABLE	001-430	1
-26	AN832-4D	•UNION - (STA 178)	001-430	1
	AN924-4D	•NUT -	001-430	1
-27	13-96055-13	•CASING ASSY - FUSELAGE STA 178-205 TOW TARGET CABLE	001-430	1
-28	13A-96074-3	•BLOCK - FUS STA 190 TOW TARGET CDT SUPPORT	001-430	1
-29	13A-96074-5	•BLOCK - TOW TARGET FUS STA 190 CDT SUPPORT	001-430	1
-30	AN520C10R21	•SCREW -	001-430	2
	AN960PD10L	•WASHER -	001-430	2
-31	AN832-4D	•UNION -	001-430	1
	AN924-4D	•NUT -	001-430	1
-32	13-96055-15	•CASING ASSY - STA 205-216 TOW TARGET CABLE	001-100	1
	13-96055-17	•CASING ASSY - STA 205-207 TOW TARGET CABLE	101-430	1
-33	AN742D4	•CLAMP -	001-430	1
-34	AN3-15A	•BOLT -	001-430	1
	NAS43DD-3-74	•SPACER -	001-430	1

FIGURE AND INDEX NUMBER	GROUP ARMAMENT EQUIPMENT MAJOR ASSEMBLY TOW TARGET FORWARD RELEASE EQUIPMENT PART NUMBER	1234567 NOMENCLATURE	CODE	UNITS PER ASSY
303 - -35 -36	AN365-1032 13-96059-10 13A-32035	•NUT - CABLE ASSY - TOW TARGET (SEE FIG. 304) BULKHEAD ASSY - FUS STA 178 UP.(SEE SECT.3) (CONTINUED SEE FIG. 304)	001-430	1 REF REF

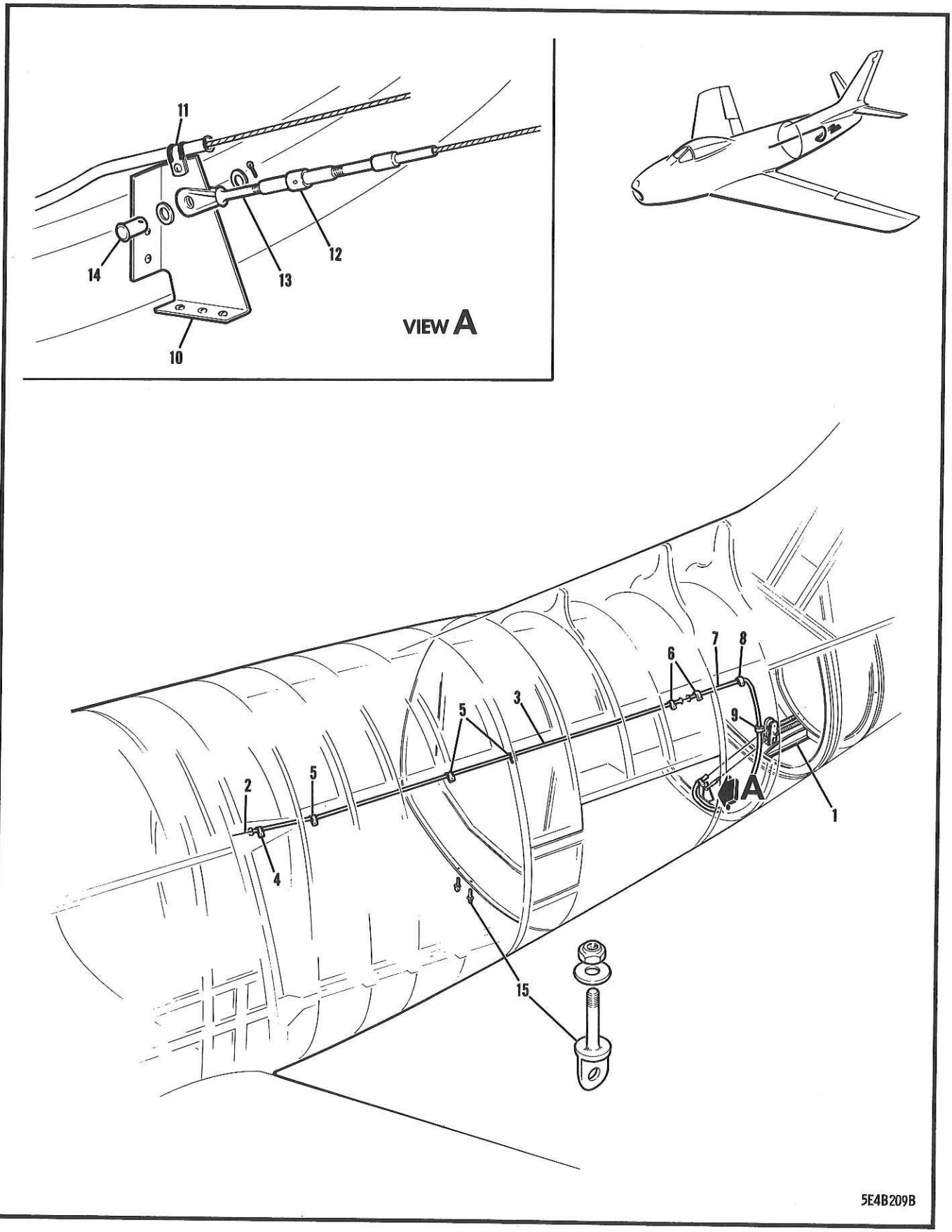

FIGURE 304 TOW TARGET REAR RELEASE EQUIPMENT
(EFFECTIVE AIRCRAFT 23001 TO 23430 INCL)

FIGURE AND INDEX NUMBER	GROUP ARMAMENT EQUIPMENT MAJOR ASSEMBLY TOW TARGET REAR RELEASE EQUIPMENT PART NUMBER	1234567 NOMENCLATURE	CODE	UNITS PER ASSY
304 -	13-96007-20	TARGET RELEASE EQUIP. INSTL - TOW (SEE FIG. 303)		REF
- 1	13-96010	.TARGET RELEASE MECHANISM INSTL - TOW (SEE FIG. 305)		REF
- 2	13-96059-10	.CABLE ASSY - TOW TARGET REAR	001-430	1
	RA-2494-2	..TERMINAL - BALL WITH DOUBLE-SHANK (ACC)	001-430	1
	AN669-52RH	..TERMINAL -	001-430	1
- 3	13-96055-109	.TUBE - FUS STA 235-323 TOW TARGET CABLE	001-430	1
- 4	AN742D4	.CLAMP -	001-430	1
	AN515-8R8	.SCREW -	001-430	1
	AN365-832	.NUT -	001-430	1
- 5	AN742D4	.CLAMP -	001-430	3
	AN520-10R8	.SCREW -	001-430	3
	AN960-10L	.WASHER -	001-430	3
	AN365-1032	.NUT -	001-430	3
- 6	2C17-4	.CLIP - TUBE LOOP TYPE (NAA)	001-430	2
	AN515-8R8	.SCREW -	001-430	2
	AN960-8	.WASHER -	001-430	2
	AN365-832	.NUT -	001-430	2
- 7	13-96055-111	.TUBE - FUS STA 323-342 TOW TARGET CABLE	001-430	1
- 8	2C17-4	.CLIP - TUBE LOOP TYPE (NAA)	001-430	1
	AN515-8R16	.SCREW -	001-430	1
	NAS43DD-3-30	.SPACER -	001-430	1
	AN365-832	.NUT -	001-430	1
- 9	2C17-4	.CLIP - TUBE LOOP TYPE (NAA)	001-430	1
	AN515-8R8	.SCREW -	001-430	1
	AN365-832	.NUT -	001-430	1
-10	13-96065	.SUPPORT - TOW TARGET CABLE	001-430	1
-11	AN742D4	.CLAMP -	001-430	1
	AN520-10R8	.SCREW -	001-430	1
	AN960D10	.WASHER -	001-430	1
	AN365-1032	.NUT -	001-430	1
-12	AN155-8S	.BARREL -	001-430	1
-13	AN161-8LS	.FORK -	001-430	1
-14	AN393-9	.PIN -	001-430	1
	AN960D10L	.WASHER -	001-430	2
	AN380-2-2	.COTTER-PIN -	001-430	1
-15	AN42-4A	.BOLT -	001-430	2
	AN960-10	.WASHER -	001-430	2
	AN365-1032	.NUT -	001-430	2

-000-

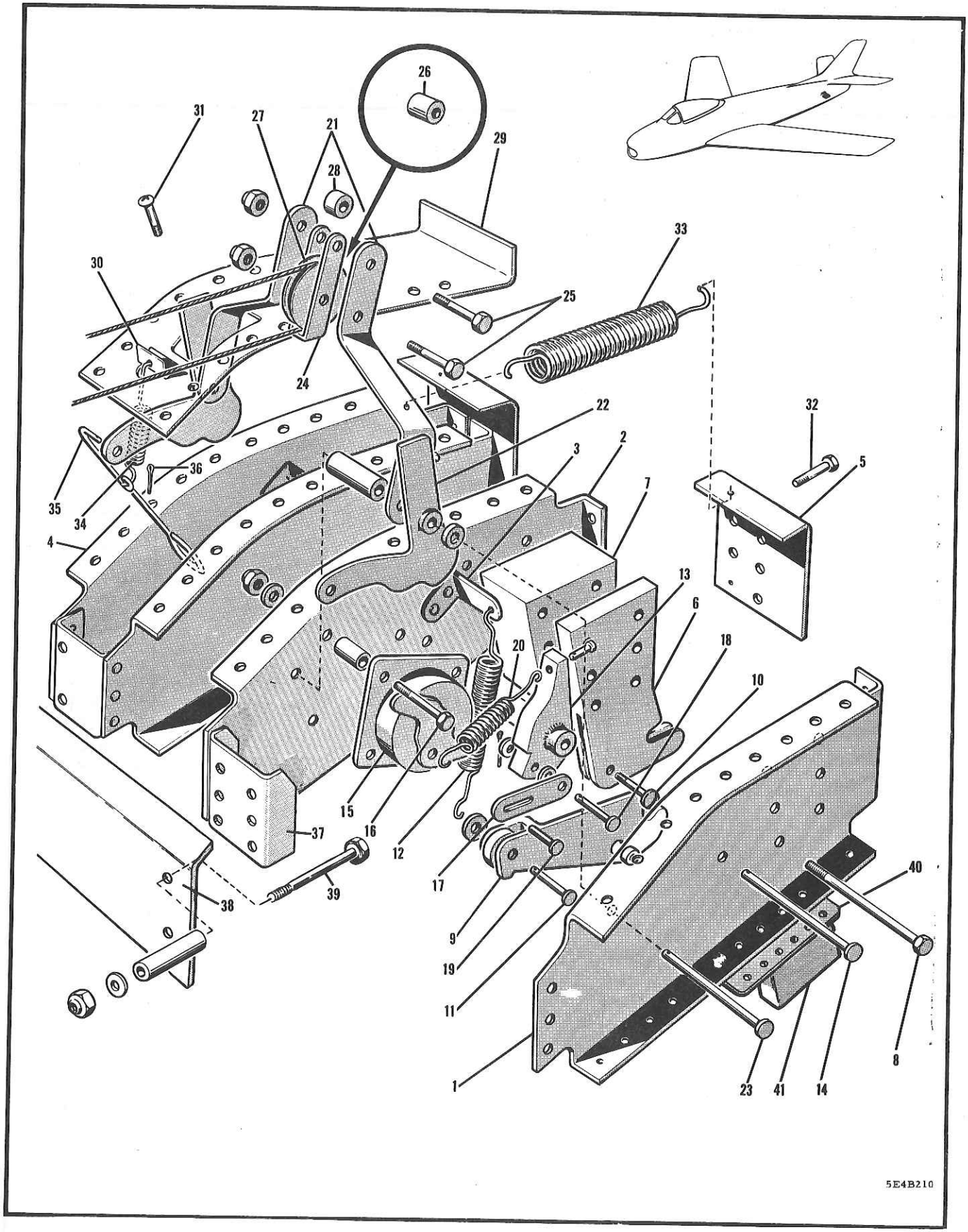

FIGURE 305 TOW TARGET RELEASE MECHANISM
(EFFECTIVE AIRCRAFT 23001 TO 23430 INCL)

FIGURE AND INDEX NUMBER	GROUP ARMAMENT EQUIPMENT MAJOR ASSEMBLY TOW TARGET RELEASE MECHANISM PART NUMBER	1234567 NOMENCLATURE	CODE	UNITS PER ASSY
305 -	13-96010	RELEASE MECHANISM INSTL - TOW TARGET (SEE FIG. 304)	001-430	NP
	13-96011-3	•MECHANICAL ASSY - TOW TARGET RELEASE LH	001-430	1
	13-96011-5	•MECHANICAL ASSY - TOW TARGET RELEASE RH	001-430	1
- 1	13-96043	••INTERCOSTAL ASSY - TOW TARGET LH FUS STA 352 TO 363 LH OUTBOARD	001-430	1
- 2	13-96044	••INTERCOSTAL ASSY - TOW TARGET FUS STA 352 TO 363 LH INBOARD	001-430	1
- 3	2C3-2	•••CLIP - (NAA) (LH INBOARD)	001-430	1
- 4	13-96045	••INTERCOSTAL ASSY - TOW TARGET FUS STA 352 TO 363 RH OUTBOARD	001-430	1
	2C3-2	•••CLIP - (NAA) (RH OUTBOARD)	001-430	1
	13-96046	••INTERCOSTAL ASSY - TOW TARGET FUS STA 352 TO 363 RH INBOARD	001-430	1
- 5	13-96051	••PLATE - TOW TARGET STA 363 FLANGED LH	001-430	1
	13-96052	••PLATE - TOW TARGET STA 363 FLANGED RH	001-430	1
- 6	13-96014	••HOOK - TOW TARGET MECHANISM	001-430	1
- 7	161-67013	••SPACER - TOW TARGET SUPPORTING HOOK	001-430	1
- 8	AN3-17A	••BOLT - (HOOK & SPACER TO INTERCOSTAL ATT)	001-430	6
	AN960D10	••WASHER -	001-430	6
	AN365-1032	••NUT -	001-430	6
- 9	161-67006	••HOOK - TOW TARGET FUS STA 363 RELEASE	001-430	1
	AN201KP3A	••BEARING -	001-430	1
-10	AN24-12A	••BOLT -	001-430	1
	NAS43-4-12	••SPACER -	001-430	1
	AN960C416L	••WASHER -	001-430	1
	AN365-428	••NUT -	001-430	1
-11	AN393-17	••PIN -	001-430	1
	AN960D10L	••WASHER -	001-430	1
-12	157-49019	••SPRING - JATO UNIT FORWARD INBD REL HOOK	001-430	1
-13	157-49015	••ROCKER ASSY - JATO UNIT FWD INBD COCKING	001-430	1
-14	AN393-53	••PIN -	001-430	1
	AN960D10L	••WASHER -	001-430	1
	AN380-2-2	••COTTER-PIN -	001-430	1
-15	C8001-1	••SOLENOID - (LEL) (TOW TARGET)	001-430	1
-16	AN515-8R16	••SCREW -	001-430	4
	NAS43C-3-25	••SPACER -	001-430	4
	AN960D8L	••WASHER -	001-430	4
	AN365-832	••NUT -	001-430	4
-17	109-63035	••LINK - WING BOMB RACK	001-430	1
-18	AN392-13	••PIN - (LINK TO ROCKER ATTACHING)	001-430	1
	AN960C6	••WASHER -	001-430	2
	AN380-2-2	••COTTER-PIN -	001-430	1
-19	AN392-7	••PIN -	001-430	1
-20	157-49018	••SPRING - JATO UNIT FORWARD INBOARD ROCKER TO SOLENOID	001-430	1
-21	13-96048	••LEVER ASSY - TOW TARGET MAN. RELEASE MECH	001-430	1
	AN393-13	•••PIN -	001-430	1
-22	13-96041	••BELL-CRANK ASSY - TOW TARGET MAN. RELEASE	001-430	1
-23	AN393-53	••PIN -	001-430	1
	NAS43C-3-56	••SPACER - (LH)	001-430	1
	NAS43C-3-10	••SPACER - (LH)	001-430	1
	NAS43C-3-60	••SPACER - (RH)	001-430	1
	AN960D10L	••WASHER - (LH)	001-430	1
	AN960-10L	••WASHER - (RH)	001-430	1
	AN380-2-2	••COTTER-PIN -	001-430	1
-24	13-96053	•GUARD - TOW TARGET RELEASE CABLE	001-430	1
-25	AN3-10A	•BOLT - (PULLEY TO GUARD TO LEVER ATT)	001-430	2
-26	4S4D6-6	•SPACER - RIVET (NAA)	001-430	4
-27	AN210-1B	•PULLEY -	001-430	1

FIGURE AND INDEX NUMBER	GROUP ARMAMENT EQUIPMENT MAJOR ASSEMBLY TOW TARGET RELEASE MECHANISM PART NUMBER	1234567 NOMENCLATURE	CODE	UNITS PER ASSY
305 -28	NAS43C3-19	•SPACER -	001-430	1
	AN365-1032	•NUT -	001-430	2
	13-96012	•COVER ASSY - TOW TARGET RELEASE MECH LH	001-430	1
	13-96012-1	••COVER - TOW TARGET RELEASE MECHANISM	001-430	1
	13-96012-3	••BRACKET - TOW TARGET RELEASE MECHANISM	001-430	1
	13-96013	•COVER ASSY - TOW TARGET RELEASE MECH RH	001-430	1
-29	13-96013-3	••COVER - TOW TARGET RELEASE MECHANISM	001-430	1
-30	13-96012-3	••BRACKET - TOW TARGET RELEASE MECHANISM	001-430	1
-31	AN526C1032R7	•SCREW - (COVER TO INTERCOSTAL ATTACHING)	001-430	40
-32	AN526C1032R8	•SCREW - (PLATE TO INTERCOSTAL ATTACHING)	001-430	9
	AN960C10	•WASHER -	001-430	49
	AN365-1032	•NUT -	001-430	49
-33	13-96042	•SPRING - TOW TARGET MANUAL RELEASE CABLE	001-430	2
-34	157-49058	•SPRING - JATO UNIT FWD MANUAL RELEASE	001-430	2
-35	161-67011	•LINK - TOW TARGET MANUAL RELEASE	001-430	2
-36	AN380-2-2	•COTTER-PIN -	001-430	2
-37	13-96050-3	•BRACKET - TOW TARGET INTERCST STA 352 SUP.	001-430	2
-38	13-96049	•PLATE - TOW TARGET RELEASE STA 352 FLANGED	001-430	1
-39	AN5-17A	•BOLT - (PLATE TO FUS FRAME)	001-430	4
	AN960-516L	•WASHER -	001-430	4
	NAS43C-5-88	•SPACER -	001-430	4
	AN363-524	•NUT -	001-430	4
	13-96047	•FAIRING ASSY - TOW TARGET RELEASE HOOK	001-430	2
-40	13-96047-953	••FLANGE - TOW TARGET RELEASE HOOK	001-430	1
-41	13-96047-951	••FAIRING - TOW TARGET RELEASE HOOK	001-430	1

-000-

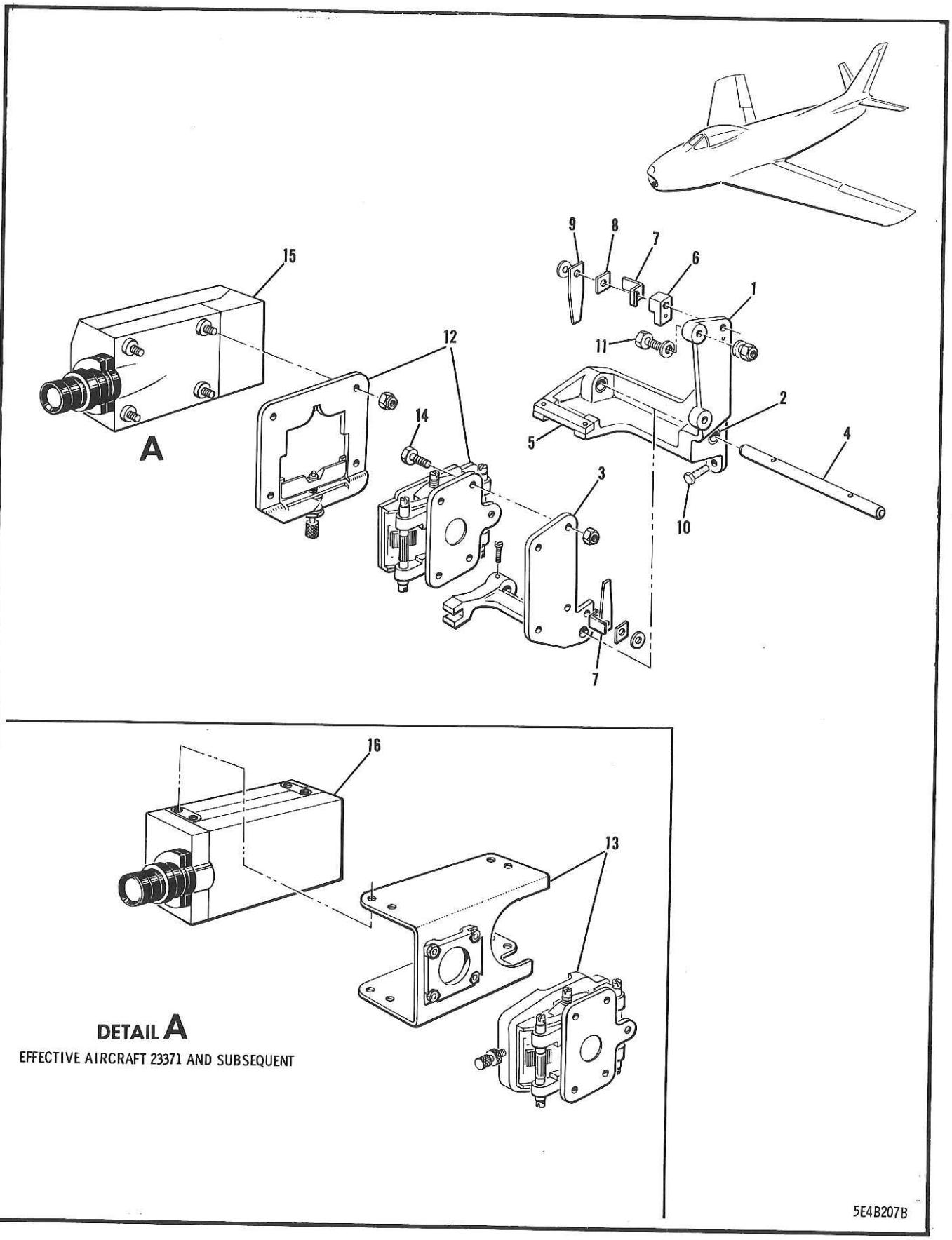

FIGURE 306 MOUNTED GUN CAMERA

FIGURE AND INDEX NUMBER	GROUP ARMAMENT EQUIPMENT MAJOR ASSEMBLY MOUNTED GUN CAMERA PART NUMBER	1234567 NOMENCLATURE	CODE	UNITS PER ASSY
306 -	161-66001	CAMERA INSTL - SHOCK MOUNTED GUN (SEE FIG. 1)		NP
	151-66023	.SHOCK MOUNT ASSY - GUN CAMERA		1
- 1	151-66019	..SUPPORT ASSY - GUN CAMERA SHOCK-MOUNT		1
- 2	4B16CP6-12	...BEARING - SINTERED OIL IMPREGNATED (NAA)		2
- 3	151-66020	..BRACKET - GUN CAMERA SHOCK-MOUNT SLIDING		1
- 4	151-66021	..SLIDER - GUN CAMERA SHOCK-MOUNT		1
- 5	151-66022	..SLIDE - GUN CAMERA MOUNT		1
	AN503-8-6	..SCREW -		2
	AN960D8L	..WASHER -		2
- 6	151-66023-3	..SPACER - (GUN CAMERA SHOCK MOUNT)		1
- 7	151-66023-9	..STABILIZER - (GUN CAMERA SHOCK MOUNT)		2
- 8	151-66023-7	..SPACER - (GUN CAMERA SHOCK MOUNT)		23
- 9	151-66023-5	..SPRING - (GUN CAMERA SHOCK MOUNT)		25
	AN960-8	..WASHER -		2
-10	AN3-5A	.BOLT -		2
-11	AN3-6A	.BOLT -		2
	AN960D10L	.WASHER -		6
	AN365-1032	.NUT -		4
-12	151-66018	.MOUNT - GUN CAMERA TYPE C1 (G.F.E.)	001-370	1
-13	232-A	.MOUNT - ADJUSTABLE CAMERA (HUB)	371-530	1
	13B-66010	.MOUNT ASSY - ADJUSTABLE N9 NOSE CAMERA	531-	1
	232-A	..MOUNT - ADJUSTABLE CAMERA (HUB)	531-	1
	13B-66010-3	..SHIM - (ADJUSTABLE N9 NOSE CAMERA MOUNT)	531-	1
-14	AN3-6A	.BOLT -		4
	AN960D10L	.WASHER -	001-370	4
	AN960D10	.WASHER -	371-	4
	AN365-1032	.NUT -		4
-15	AN-N6	.CAMERA - GUN (G.F.E.)	001-370	1
-16	AN-N9	.CAMERA - GUN (G.F.E.) (MINUS C-473 FILTER & 9C702 SELECTOR)	371-	1
	AN501A10-6	.SCREW -	371-	4
	AN525-10-6	.SCREW -	371-530	4
	AN509-10R6	.SCREW -	531-	4
	AN960-10	.WASHER -	001-370	4
	AN935-10	.WASHER -	371-	4
	AN365-1032	.NUT -	001-370	4

-000-

SECTION 21

LOOSE EQUIPMENT

TABLE OF CONTENTS

FIGURE	TITLE	PAGE
307	LOOSE EQUIPMENT & GENERAL DATA	1270
308	GROUND TEST HYDRAULIC HAND-PUMP	1274
309	ROCKET FORWARD MOUNT	1278
310	ROCKET EQUIPMENT KIT	1282
311	BOMB RACK	1284

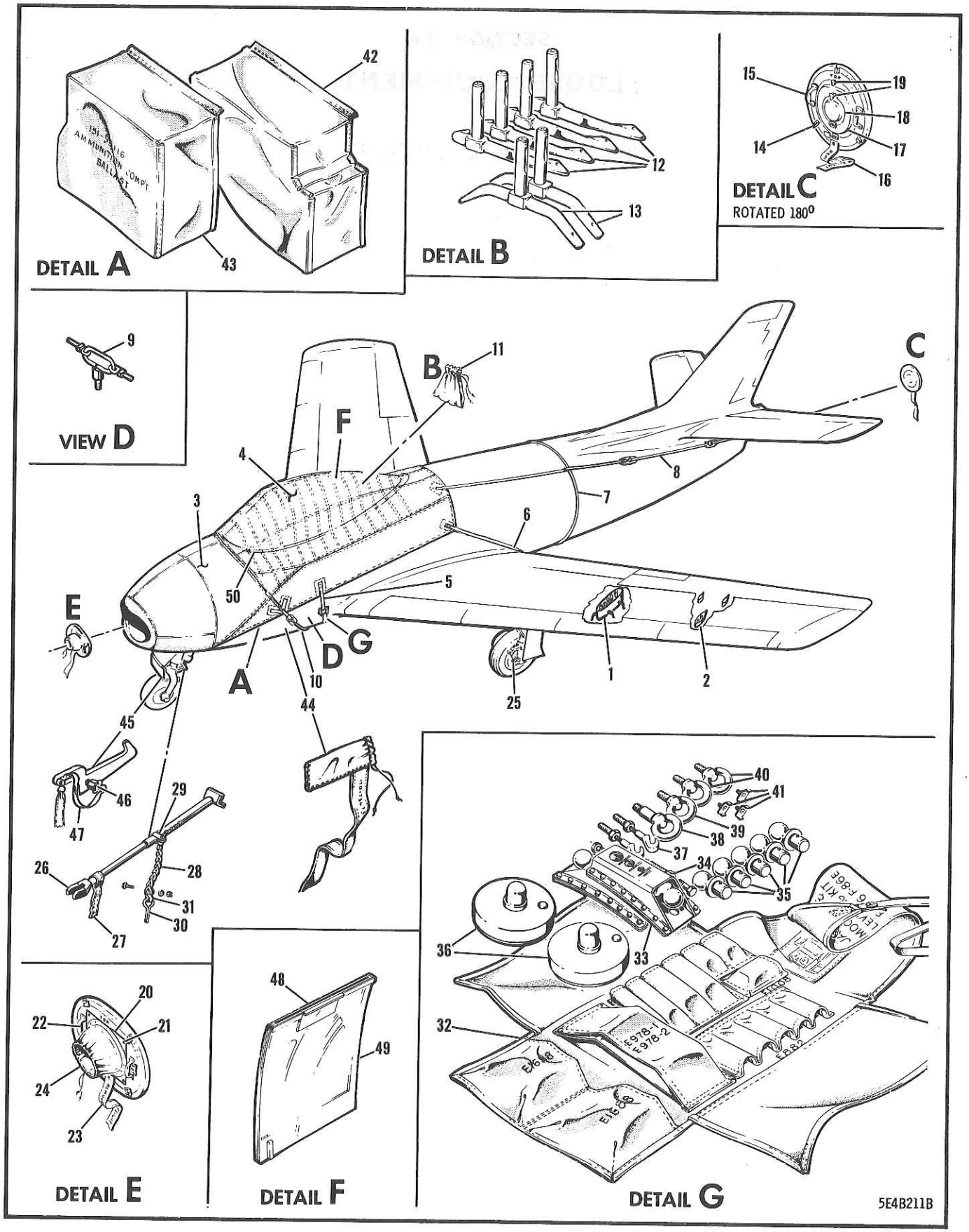

FIGURE 307 LOOSE EQUIPMENT & GENERAL DATA

FIGURE AND INDEX NUMBER	GROUP LOOSE EQUIPMENT MAJOR ASSEMBLY LOOSE EQUIPMENT & GENERAL DATA PART NUMBER	1234567 NOMENCLATURE	CODE	UNITS PER ASSY
307 -	13-86022	DATA INSTL - LOOSE EQUIPMENT & GENERAL (SEE FIG. 1)		NP
	172-58631	•HAND-PUMP ASSY - HYDRAULIC GROUND TEST (SEE FIG. 308)		REF
		SHIPPED UNDER SEPARATE COVER		
- 1	151-63002-840	•KIT INSTL - BOMB RACK (SEE FIG. 311)		REF
- 2	151-89001-5	•KIT EQUIP. INSTL - ROCKET (SEE FIG. 310)		REF
	140-73060-800	•COVER ASSY - NOSE & ENCLOSURE		1
- 3	140-73060-802	••COVER ASSY - NOSE ENCLOSURE		1
	3250-1	•••DEE - HEAVY PATTERN WELDED ST WIRE (NJM)		2
- 4	140-73060-804	••COVER ASSY - COCKPIT ENCLOSURE		1
	3250-1	•••DEE - HEAVY PATTERN WELDED ST WIRE (NJM)		2
- 5	140-73060-810	•••STRAP ASSY - ENCLOSURE STA 110 (PORT)		1
- 6	140-73060-812	•••STRAP ASSY - ENCLOSURE STA 192-242(STBD)		1
- 7	140-73060-814	•••STRAP ASSY - ENCLOSURE STA 262 (STBD)		1
- 8	140-73060-816	•••STRAP ASSY - ENCLOSURE STA 262-415(STBD)		1
	3250-1	•••DEE - HEAVY PATTERN WELDED ST WIRE (NJM)		2
	140-73060-806	••STRAP ASSY - NOSE & ENCLOSURE STA 87		1
- 9	E1028	•••FITTING - NOSE & ENCLOSURE COVER ATTACHING STA 87 MPI		1
-10	140-73060-808	••STRAP ASSY - NOSE & ENCLOSURE STA 87		2
	200-1-1/8	•••SNAP - (NJM) (LOOP EYE UTILITY)		1
	3250-1	•••DEE - HEAVY PATTERN WELDED ST WIRE (NJM)		2
	AN229-2DL252-1	••FASTENER -		2
	140-63020	•KIT - BOMB RACK SWAY-BRACE		1
-11	120-63039	••BAG ASSY - BOMB SWAY-BRACE STOWAGE		1
-12	117-63227	••SWAY-BRACE ASSY - STANDARD BOMB RACK MPI		4
-13	117-63295	••SWAY-BRACE ASSY - WING BOMB RACK BOMB CLUSTER MPI		2
	170-73072	•SHIELD ASSY - JET ENGINE EXHAUST DUST		1
-14	1200-1	••RELEASE - (CTI) (INSTANT)		3
	AN530-8R6	••SCREW -		6
-15	575	••HANDLE - (AHC) (DUST SHIELD)		2
	AN3-5A	••BOLT -		8
	AN960C10L	••WASHER -		8
	AN365-1032	••NUT -		8
-16	12S1	••STREAMER - RED WARNING (NAA)		1
	4S4-D6-7	••SPACER - RIVET (NAA)		1
	AN970-3	••WASHER -		1
	13-63032-5	••NAME-PLATE - DUST SHIELD		1
-17	170-73072-21	••DOOR - EXHAUST DUST SHIELD		1
-18	170-73072-19	••DOOR - EXHAUST DUST SHIELD		1
	170-73072-29	••HINGE - EXHAUST DUST SHIELD DOOR (MAKE FROM AN257HP2-200)		4
	AN253-2-200	••HINGE-PIN -		2
-19	AW6-1/2-50	••FASTENER - WINGED TYPE HEAD (DFC)		2
	GA6-1/2-375	••GROMMET - FASTENER (DFC)		2
	S6-250	••SPRING - FASTENER (DFC)		2
	AN526C428R7	•SCREW - (RESTRICTOR)	371-	8
	170-73071	•SHIELD ASSY - JET ENGINE AIR INTAKE DUST		1
-20	170-73071-950	••COVER ASSY - AIR INTAKE DUST		1
	170-73071-952	•••COVER - AIR INTAKE DUST CANVAS		1
-21	AN227-7B	•••SOCKET -		2
	AN227-6B	•••BUTTON -		2
	AN531-8R6	••SCREW -		2
	C149	••WASHER - (STE)		2
	AN227-10-10	••STUD -		2
-22	482	••HANDLE - (AHC) (DUST SHIELD)		2

FIGURE AND INDEX NUMBER	GROUP LOOSE EQUIPMENT MAJOR ASSEMBLY LOOSE EQUIPMENT & GENERAL DATA PART NUMBER	1234567 NOMENCLATURE	CODE	UNITS PER ASSY
307 -	AN3-5A	••BOLT -		8
	AN960C10L	••WASHER -		8
	AN365-1032	••NUT -		8
-23	12S1	••STREAMER - RED WARNING (NAA)		1
	4S4-D6-7	••SPACER - RIVET (NAA)		1
	AN970-3	••WASHER -		1
-24	170-73071-13	••DUCT - FABRIC		1
	170-73071-15	••CORD - DRAW		1
	13-63032-3	••NAME-PLATE - DUST SHIELD		1
-25	146383	•COVER ASSY - (BAC) (LANDING GEAR BRAKE)	001-662	2
	58595	•SCREW - (AMS) (PHILLIPS HEAD RETAINING)	001-662	12
	AN936A10	•WASHER -	001-662	12
	63125	•SCREEN - FIXED INTAKE (G•F•E•)	A45	1
	13B-53013	•HARNESS ASSY - AN-N6 GUNSIGHT CAMERA WIRE (AS PER EO 05-5E-6A/65)		1
	115-C	••CONNECTOR - RIGHT ANGLE (BEE)		1
	AN3057-8A	••ADAPTER -		1
	AN3106B16S1P	••CONNECTOR -		1
	13B-52013	•DOVETAIL - AN-N6 CAMERA (AS PER EO 05-5E-6A/65)		1
	13B-52012	•BLOCK - AN-N6 CAMERA (AS PER EO 05-5E-6A/65)		1
	025901A	•PLATE ASSY - (HUB) OR		1
	151-66018	•MOUNT - GUN CAMERA		
	E1601	•LOCK ASSY - NOSE GEAR DOOR OPEN POSN GRD		1
-26	E1690	••FORK - NOSE GEAR DOOR OPEN POSN GRD LOCK		1
-27	E1601-11	••STREAMER - RED WARNING		1
	AN960CU13	••WASHER -		4
-28	9C1-2-5	••CHAIN - BEAD (NAA)		1
-29	AN742-12	••CLAMP -		1
-30	2P3-5	••LOCK-PIN - (NAA)		1
-31	AN742-3	••CLAMP -		1
	AN515-8R7	••SCREW -		2
	AN960-8L	••WASHER -		2
	AN365-832	••NUT -		2
		STOWED IN REAR AMMUNITION BAY		
	E1696	•KIT - JACKING, MOORING & LEVELLING EQUIP•		1
-32	E1697	••BAG ASSY - JACKING, MOORING & LEV EQUIP•		1
-33	E978-1	••SUPPORT ASSY - FUS JACK PAD STA 236(PORT)		1
	E978-2	••SUPPORT ASSY - FUS JACK PAD STA 236(STBD)		1
-34	AN8-12A	••BOLT - (JACK FITTING ATTACHING)		2
	AN4-10A	••BOLT - (JACK FITTING ATTACHING)		2
-35	E882	••PAD ASSY - WING & FUSELAGE JACK MPI		5
	T170	•••SPRING - 3/16 BALL DETENT		1
	COMMERCIAL	•••BALL - STAINLESS •1875 DIAMETER		1
-36	E1688	••PAD ASSY - WOP AUXILIARY JACK		2
	E1686	•••JACK STUD - WOP AUXILIARY JACK PAD		1
	E1691	•••PAD - WOP AUXILIARY JACKING		1
	E1687-3	•••PIN - WOP AUXILIARY JACKING PAD LOCATING		1
	E1687-5	•••PIN - WOP AUXILIARY JACKING PAD LOCATING		1
-37	E1001	••FITTING ASSY - OUTER WING BOMB HOIST ATT		2
	E1002	•••HOOK - OUTER WING BOMB HOIST ATT FITTING		1
	E1003	•••STUD - OUTER WING BOMB HOIST ATT FITTING		1
-38	E1007	••EYE - FUSELAGE MOORING STA 87 MPI		1
-39	E992	••EYE - FUSELAGE MOORING STA 379 MPI		1
-40	E1005	••EYE - WING MOORING MPI		
-41	E1008	••SCREW ASSY - PLUMB BOB LEVELLING & TARGET ALIGNING		3

FIGURE AND INDEX NUMBER	GROUP LOOSE EQUIPMENT MAJOR ASSEMBLY LOOSE EQUIPMENT & GENERAL DATA PART NUMBER	1234567 NOMENCLATURE	CODE	UNITS PER ASSY
		AMMUNITION BOXES		
307 -42	151-53117	•BAG ASSY - AMMUNITION COMPT BALLAST OUTBD		6
-43	151-53116	•BAG ASSY - AMMUNITION COMPT BALLAST INBD		6
-44	170-73073	•COVER ASSY - AIR PSEED TUBE DUST		1
	E1201	•LOCK ASSY - NOSE GEAR DRAG BRACE GROUND	001-490	1
	E1201-11	•LOCK ASSY - NOSE GEAR DRAG BRACE GROUND	491-	1
	E1201-3	••ROD - NOSE GEAR BRACE GROUND	001-490	1
-45	E1201-13	••ROD - NOSE GEAR BRACE GROUND	491-	1
-46	A508	••PIP-PIN - QUICK RELEASE (ADI)		1
	E1201-10	••CLAMP - (MAKE FROM AN742-5)		1
-47	E1201-7	••CABLE - LOCK ASSY (1/16 X 9)		1
	RA-2487-2	••TERMINAL - PLAIN BALL SWAGED (ACC)		2
	E1201-9	••LINK - NOSE GEAR BRACE GROUND	001-300	1
	12S1	••STREAMER - RED WARNING (NAA)		1
-48	170-53077-950	•CONTAINER - PILOT CHECK LIST	001-684	1
	170-53077-956	•CONTAINER - PILOT CHECK LIST	685-	1
-49	172-53051-800	•LIST - PILOT CHECK-OFF		1
		AIRPLANE DATA CASE		
-50	13A-53000	•WIRING DIAGRAM - ELECTRICAL SCHEMATIC		1
	140-63012	•CHART - BOMB HOISTING & LOADING		1
		-000-		

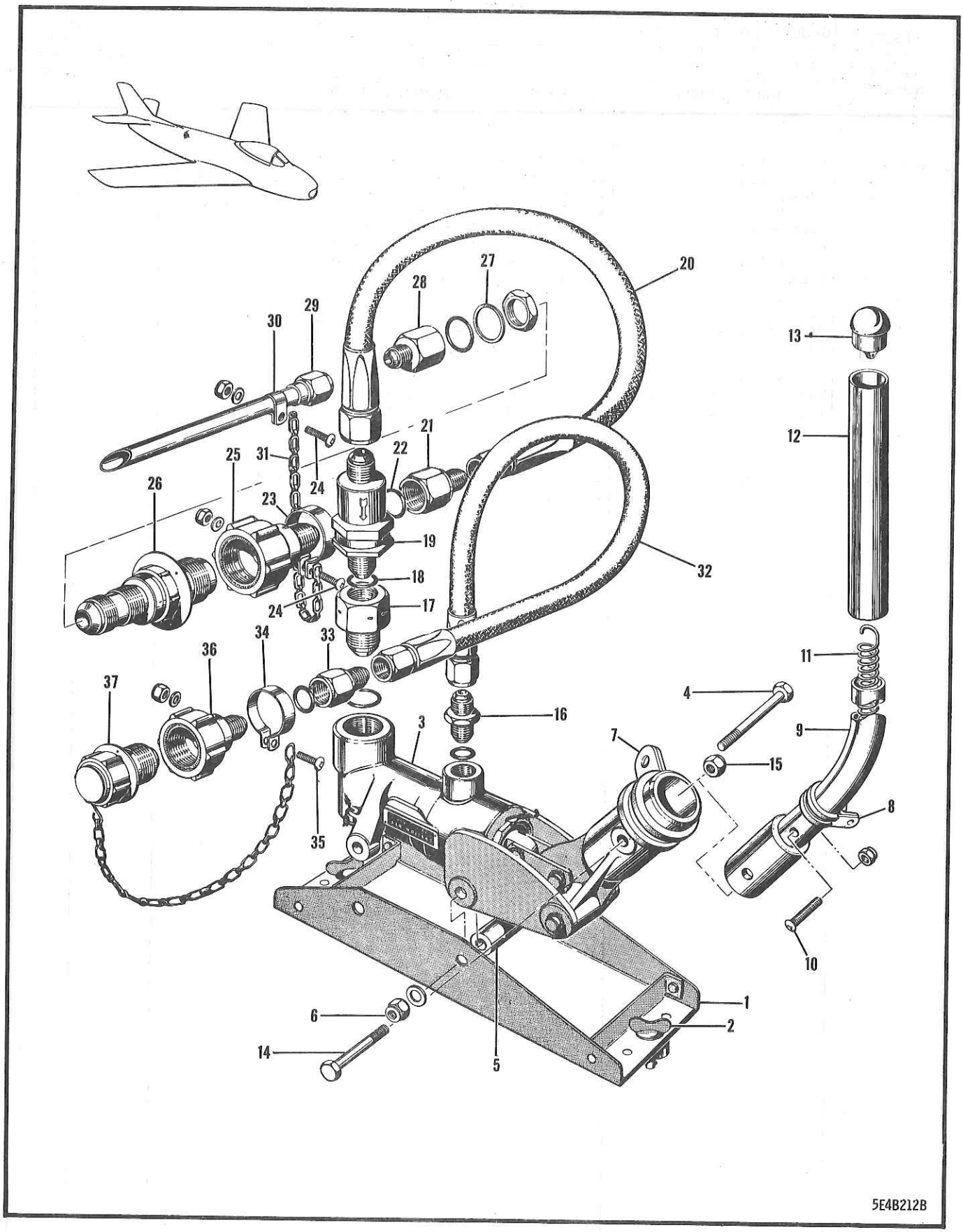

FIGURE 308 GROUND TEST HYDRAULIC HAND-PUMP

FIGURE AND INDEX NUMBER	GROUP LOOSE EQUIPMENT MAJOR ASSEMBLY GROUND TEST HYDRAULIC HAND-PUMP PART NUMBER	1234567 NOMENCLATURE	CODE	UNITS PER ASSY
308 -	172-58631	HAND-PUMP ASSY - HYDRAULIC GROUND TEST (SEE FIG. 307)		1
	172-58631-801	•SUB-ASSY - (PUMP)		1
- 1	172-58136	••BRACKET ASSY - HYDRAULIC GROUND TEST HAND-PUMP SUPPORT		1
- 2	W98292-6-620	•••STUD - WING TYPE ROUNDHEAD AIRLOC FASTENER (MKM)		2
	99836	•••CROSS-PIN - AIRLOC FASTENER (MKM)		2
- 3	AN6248-2	••HAND-PUMP - HYDRAULIC TYPE 3000		1
- 4	AN4-35A	••BOLT - (PUMP TO BRACKET ATTACHING)		2
- 5	NAS43DD4-28	••SPACER -		4
	AN960D416	••WASHER -		2
- 6	AN365-428	••NUT -		2
- 7	AN742D24C	••CLAMP -		1
	668-3-FR	••STRAP ASSY - BUNDLE TYPE HARNESS (ADE)		1
	AN520-10R8	••SCREW -		1
	AN365-1032	••NUT -		1
- 8	AN742D14C	••CLAMP -		1
	668-3-FR	••STRAP ASSY - BUNDLE TYPE HARNESS (ADE)		1
	AN520-10R8	••SCREW -		1
	AN365-1032	••NUT -		1
	172-58141	••HANDLE ASSY - HYD GROUND TEST HAND-PUMP		1
- 9	172-58139	•••TUBE ASSY - HYDRAULIC GROUND TEST HAND-PUMP HANDLE		1
-10	AN515-8R18	•••SCREW -		1
	AN365-832	•••NUT -		1
-11	25-58067	•••SPRING - HYDRAULIC HAND-PUMP CTL HANDLE RETRACTING (DEMAGN BEFORE INSTL)		1
-12	172-58138	•••TUBE - HYD GROUND TEST HAND-PUMP HANDLE		1
-13	140-58214	•••KNOB - HYDRAULIC HAND-PUMP CTL HANDLE		1
-14	AN3-16A	••BOLT - (HANDLE TO PUMP ATTACHING)		1
-15	AN365-1032	••NUT -		1
	AN6290-4	••GASKET -		1
-16	AN815-4D	••UNION -		1
-17	AN893-12D	••BUSHING -		1
	AN6290-8	••GASKET -		1
-18	AN6290-6	••GASKET -		1
-19	38390	••FILTER - (PUR) (HYDRAULIC OIL)		1
	172-58631-803	•SUB-ASSY - (PUMP INLET)		1
-20	MS28741-6-0240	••HOSE ASSY - DETACHABLE END FITTING M/P		1
-21	AN894D12-6	••BUSHING -		1
-22	AN6290-12	••GASKET -		1
-23	AN735D22	••CLAMP -		1
-24	AN515-6R8	••SCREW -		2
	AN960D6	••WASHER -		2
	AN365-632	••NUT -		2
-25	155-S5-12	••COUPLING HALF - HOSE SELF-SEALING (AQC)		1
-26	155-S2-12	••COUPLING HALF - HOSE SELF-SEALING (AQC)		1
	AN6289D12	••NUT -		1
-27	AN6291-12	••RING -		1
	AN6290-12	••GASKET -		1
-28	AN894D12-6	••BUSHING -		1
-29	165-58400	••TUBE ASSY - HYDRAULIC GROUND TEST HAND-PUMP SUPPLY		1
-30	AN735D6	••CLAMP -		1
	2C28	••CLIP - BALL & CHAIN ATTACHING (NAA)		2
-31	9C1-2-10	••CHAIN - BEAD (NAA)		1
	172-58631-805	•SUB-ASSY - (PUMP OUTLET)		1
-32	MS28741-4-0220	••HOSE ASSY - DETACHABLE END FITTING M/P		1
-33	AN894D6-4	••BUSHING -		1

FIGURE AND INDEX NUMBER	GROUP LOOSE EQUIPMENT MAJOR ASSEMBLY GROUND TEST HYDRAULIC HAND-PUMP PART NUMBER	1234567 NOMENCLATURE	CODE	UNITS PER ASSY
308 -	AN6290-6	••GASKET -		1
-34	AN735D15	••CLAMP -		1
-35	AN515-6R8	••SCREW -		2
	AN960D6	••WASHER -		2
	AN365-632	••NUT -		2
-36	155-S5-6	••COUPLING HALF - HOSE SELF-SEALING (AQC)		1
-37	155-S9-8	••PLUG - DUST (AQC)		1
		-000-		

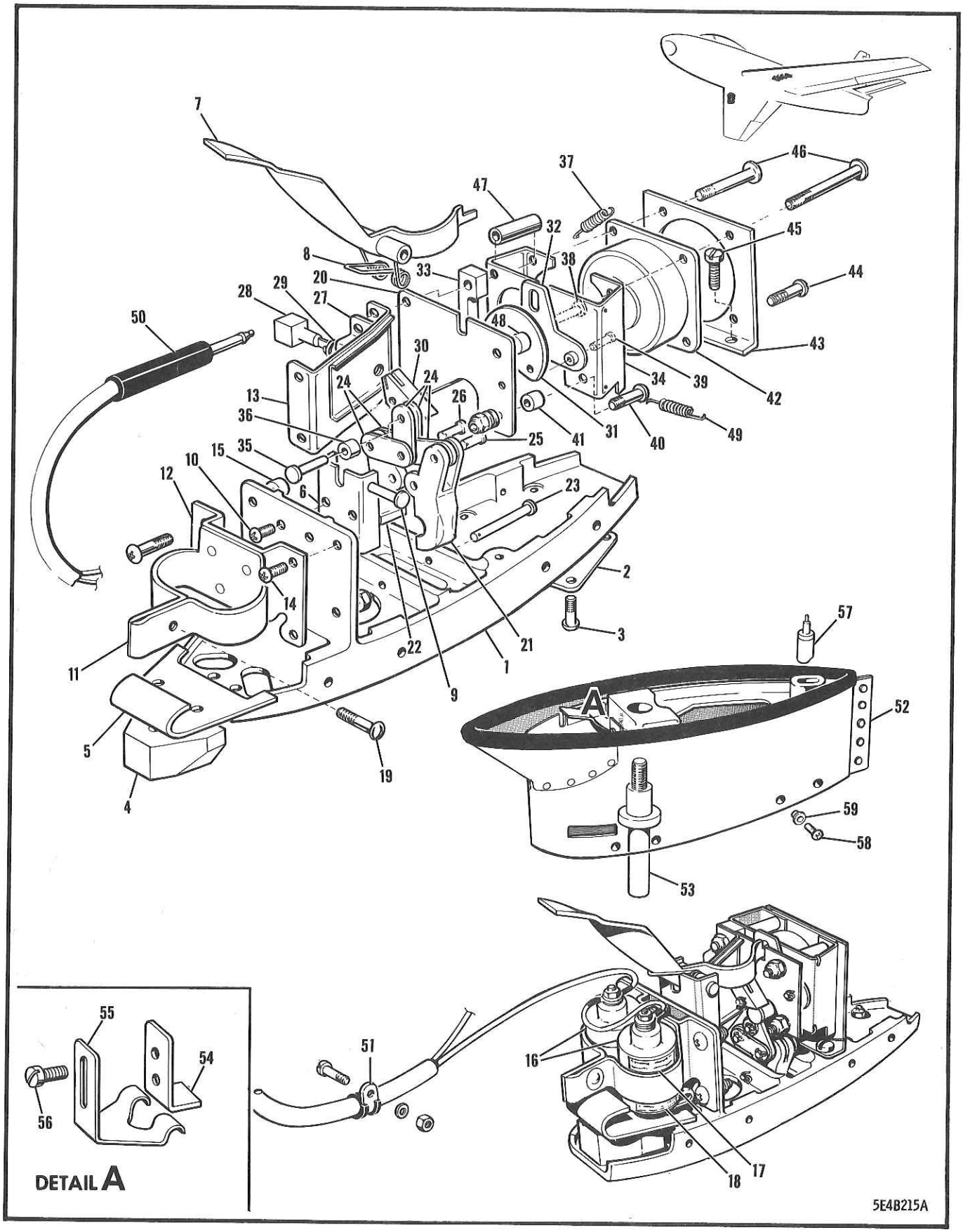

FIGURE 309 ROCKET FORWARD MOUNT

FIGURE AND INDEX NUMBER	GROUP LOOSE EQUIPMENT MAJOR ASSEMBLY ROCKET FORWARD MOUNT PART NUMBER	1234567 NOMENCLATURE	CODE	UNITS PER ASSY
309 -	170-68002	MOUNT ASSY - ROCKET FWD (SEE FIG. 310)		8
	151-68004-5	•ACTUATOR ASSY - ROCKET FORWARD MOUNT		1
- 1	152-68012-3	••BASE ASSY - ROCKET FORWARD MOUNT		1
- 2	161-68006	•••DEFLECTOR - ROCKET FORWARD MOUNT BASE		1
- 3	NAS221-10	•••SCREW -		4
	AN365-1032	•••NUT -		4
	140-68024	•••PLATE - ROCKET FORWARD MOUNT BASE		1
	AN509-8-5	•••SCREW -		2
	R104SH-5L	•••INSERT - LOCKED-IN (ROS)		8
	RL21SB-6	•••LOCK-RING - STANDARD (ROS)		8
- 4	172-68010	••SPACER - ROCKET TYPE F1 ARMING UNIT MTG		1
- 5	172-68009	••GUARD - ROCKET TYPE F1 ARMING UNIT MTG		1
	170-68010	••RELEASE ASSY - ROCKET FWD MOUNT MECHANISM		1
- 6	170-68007	•••SUPPORT - ROCKET FWD MOUNT MECH REL ARM		1
- 7	170-68005	•••ARM ASSY - ROCKET FORWARD MOUNT MECH REL		1
- 8	170-68009	•••SPRING - ROCKET FORWARD MOUNT MECHANISM RELEASE ARM RETAINING		1
- 9	AN393-45	•••PIN -		1
	AN380-2-1	•••COTTER-PIN -		1
-10	AN515-8R9	••SCREW - (RELEASE ARM SUPPORT ATTACHING)		3
	AN960D8	••WASHER -		3
	AN365-832	••NUT -		3
	172-68005	••MOUNT ASSY - ROCKET TYPE F1 UNIT MOUNTING		1
-11	172-68006	•••STRAP - ROCKET TYPE F1 ARMING UNIT MTG		1
-12	172-68007	•••BRACKET - ROCKET TYPE F1 ARMING UNIT MTG		1
-13	140-68042	••BRACE ASSY - ROCKET FWD MOUNT JETT MECH		1
-14	AN520-10R8	••SCREW -		2
	AN520-10R13	••SCREW - (BRACE ATTACHING RH)		2
-15	4S4-6-8	••SPACER - RIVET (NAA) (RH)		2
	AN365-1032	••NUT -		4
-16	MIL-S-5733	••SOLENOID ASSY - FUSE ARMING TYPE F1 (MAV) (G.F.E.)		2
-17	151-68004-24	••DECALCOMANIA - SOL FUSE ARMING TYPE F1		2
-18	151-68004-26	••DECALCOMANIA - USAF 5/N5200-1749850 25-VOLT DIRECT-CURRENT		2
-19	7S14-1032-8A	••SCREW - ROUNDHEAD (NAA)		1
	AN363C1032	••NUT -		1
-20	140-68039	••PLATE - ROCKET FORWARD MOUNT MECHANISM		1
-21	140-68015	••CLAMP - ROCKET FORWARD MOUNT (FORKED)(LH)		1
-22	140-68016	••CLAMP - ROCKET FORWARD MOUNT EYE (RH)		1
-23	AN393-39	••PIN - (FORK & EYE CLAMP ATTACHING)		1
	AN380-2-2	••COTTER-PIN -		1
-24	140-68017	••LINK - ROCKET FORWARD MOUNT		5
-25	AN393-21	••PIN - (LH)		1
	4S4-6-3	••SPACER - RIVET (NAA)		2
	AN380-2-2	••COTTER-PIN -		1
-26	AN393-19	••PIN - (CENTRE & RH)		2
	AN960D10	••WASHER -		2
	AN380-2-2	••COTTER-PIN -		2
-27	140-68049	••GUIDE - ROCKET FORWARD MOUNT MECH COCKING		1
-28	140-68047	••PLUNGER ASSY - FORWARD MOUNT COCKING		1
-29	140-68046	••SPRING - PLUNGER COMPRESSION		1
-30	140-68051	••ARM - ROCKET FORWARD MOUNT COCKING		1
-31	140-68043	••SEAR ASSY - ROCKET FORWARD MOUNT JETTISON		1
-32	170-68006	••LOCK - ROCKET FORWARD MOUNT JETTISON SEAR		1
-33	140-68053	••SPACER - ROCKET FORWARDMOUNT LOCK CHECK		1
-34	140-68040	••CHANNEL - ROCKET FORWARD MOUNT MECHANISM		1
-35	AN393-23	••PIN - (LINK TO SEAR ATTACHING)		1
-36	4S4-6-10	••SPACER - RIVET (NAA)		1
	4S4-6-2	••SPACER - RIVET (NAA)		1

FIGURE AND INDEX NUMBER	GROUP LOOSE EQUIPMENT MAJOR ASSEMBLY ROCKET FORWARD MOUNT PART NUMBER	1234567 NOMENCLATURE	CODE	UNITS PER ASSY
309 -37	140-68045	••SPRING - ROCKET FORWARD MOUNT JETTISON		1
-38	AN392-27	••PIN - (SEAR & ARM TO PLATE & CHANNEL ATT)	001-370	1
-39	AN392-15	••PIN - (SEAR LOCK TO MOUNT PLATE ATT)		1
	AN380-2-2	••COTTER-PIN -		2
-40	NAS220-13	••SCREW -		2
-41	4S3-8-10	••SPACER - BOLT (NAA) (LH)		1
	AN960-8L	••WASHER -		3
	AN365-832	••NUT -		2
	AN380-1-2	••COTTER-PIN -		2
-42	C8001-3	••SOLENOID - (LEL)		1
-43	151-68041	••SUPPORT - ROCKET JETTISON SOLENOID		1
-44	NAS220-9	••SCREW -		2
	AN365-832	••NUT -		2
-45	AN500A10-7	••SCREW -		2
	2W18-10L	••WASHER - FLAT (NAA)		AR
-46	NAS220-29	••SCREW -		2
-47	4S3-8-26	••SPACER - BOLT (NAA)		2
-48	4S3-8-10	••SPACER - BOLT (NAA) (LH)		1
	AN365-832	••NUT -		2
-49	140-68050	••SPRING - ROCKET JETTISON SOLENOID		1
-50	PJ068	••PLUG - (WTM) (JETTISON CABLE)		1
		OR		
	PL68	••PLUG - (WTM) (JETTISON CABLE)		
		OR		
	NAF212938-1	••PLUG - (WTM) (JETTISON CABLE)		
-51	AN742D6C	•CLAMP -		1
	AN515-8-8	•SCREW -		1
	AN960D8	•WASHER -		1
	AN365-832	•NUT -		1
-52	170-68004	•FAIRING ASSY - ROCKET FORWARD MOUNT		1
-53	151-68008	•POST ASSY - ROCKET FORWARD MOUNT		1
-54	140-68052	•CLIP - ROCKET FORWARD MOUNT POST RETAINING		1
-55	140-68023	•SPRING - ROCKET FORWARD MOUNT		1
-56	AN500A8-5	•SCREW -		2
-57	140-68018-800	•LUG - ROCKET FORWARD MOUNT		1
	AN960-616	•WASHER -		1
	AN380-2-3	•COTTER-PIN -		1
-58	NAS220-8	•SCREW -		8
-59	151-68010	•BUSHING - ROCKET FORWARD MOUNT FAIRING		8
		-000-		

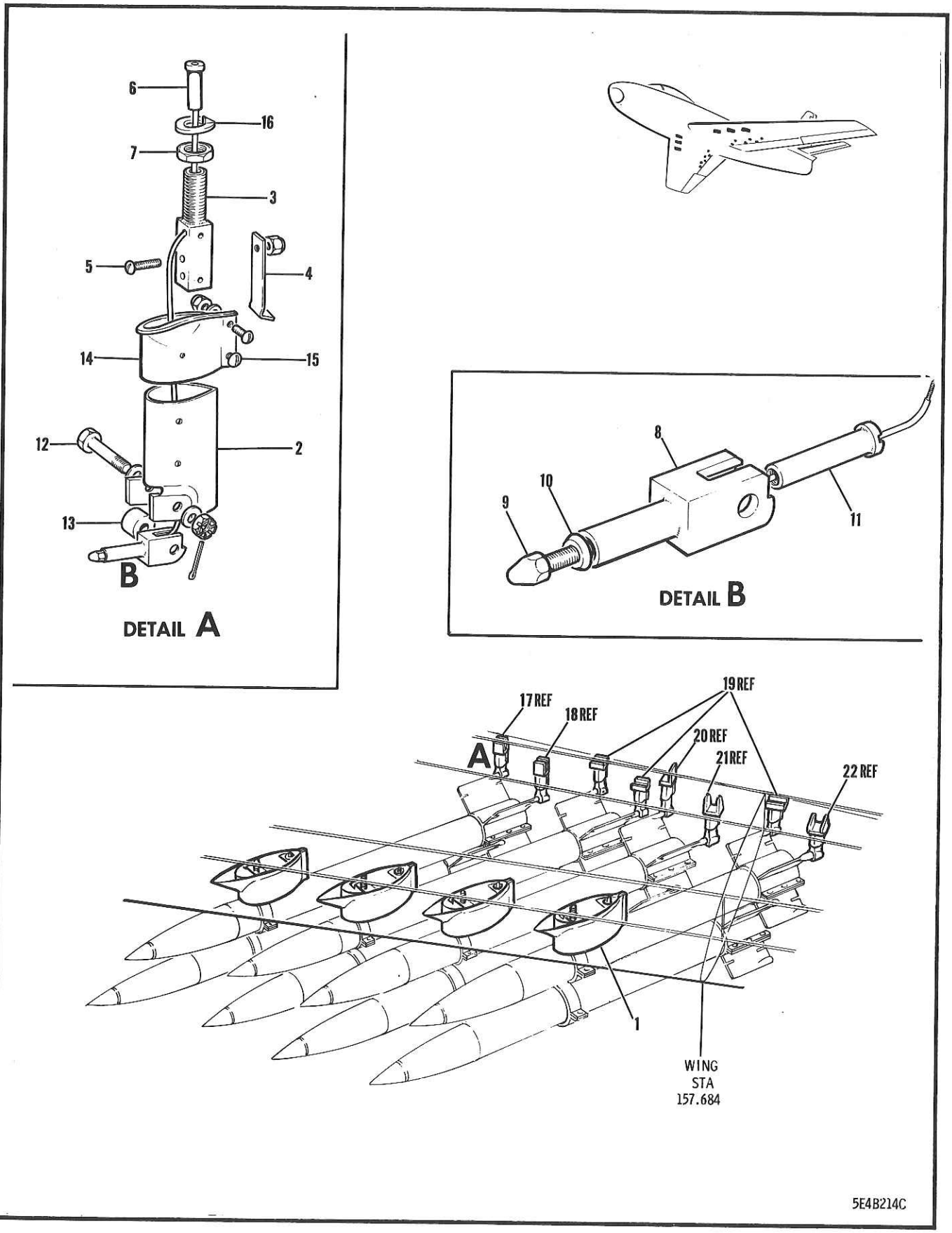

FIGURE 310 ROCKET EQUIPMENT KIT

FIGURE AND INDEX NUMBER	GROUP / MAJOR ASSEMBLY / PART NUMBER	LOOSE EQUIPMENT / ROCKET EQUIPMENT KIT / 1234567 NOMENCLATURE	CODE	UNITS PER ASSY
310 -	151-89001-5	KIT EQUIPMENT INSTL - ROCKET (SEE FIG. 307)	001-300	NP
	151-89001-805	KIT EQUIPMENT INSTL - ROCKET	301-	NP
- 1	170-68002	•MOUNT ASSY - ROCKET FORWARD (SEE FIG. 309)		REF
	151-68032-3	•MOUNT ASSY - ROCKET REAR (PORT)		8
	151-68032-4	•MOUNT ASSY - ROCKET REAR (STARBOARD)		8
- 2	151-68031	••COLUMN - ROCKET MOUNT REAR		1
- 3	151-68030	••SCREW - ROCKET REAR MOUNT		1
- 4	151-68029	••SPRING - ROCKET REAR MOUNT JETTISON		1
- 5	NAS221-14	••SCREW -		1
	AN365-1032	••NUT -		1
- 6	140-68033	••INSULATOR - ROCKET REAR MOUNT		2
- 7	AN316-8R	••NUT -		1
	161-68035	••PLUG ASSY - ROCKET REAR MOUNT ELECTRICAL		1
- 8	161-68036	•••HOUSING - ROCKET REAR MOUNT ELEC PLUG	001-200	1
	187-68083	•••HOUSING - ROCKET REAR MOUNT ELEC PLUG	201-	1
- 9	161-68035-5	•••SCREW ASSY - ROCKET REAR MOUNT ELEC		1
-10	157-68062	•••WASHER - ROCKET REAR MOUNT PLUG		1
-11	157-68060	•••INSULATOR - ROCKET REAR MOUNT FIN ELECTRIC PLUG		1
-12	AN4-14	••BOLT -		1
-13	4S3-416-13	••SPACER - BOLT (NAA)		1
	AN960-416L	••WASHER -		2
	AN320-4	••NUT -		1
	AN380-2-2	••COTTER-PIN -		1
-14	140-68032-1	••SLEEVE - ROCKET REAR MOUNT (PORT)		1
	140-68032-2	••SLEEVE - ROCKET REAR MOUNT (STARBOARD)		1
-15	AN515-8-7	••SCREW -		2
	AN960-8L	••WASHER -		2
	AN365-832	••NUT -		2
-16	140-68034-801	•WASHER ASSY - ROCKET REAR MOUNT		16
	140-68034-951	••WASHER - ROCKET REAR MOUNT	301-	1
	140-68034-953	••PIN - ROCKET REAR MOUNT	301-	2
-17	151-14576-1	FITTING ASSY - PORT WING OUTER PANEL ROCKET ATTACHING REAR STA 116 (SEE SECT. 1)		REF
-18	151-14577-1	FITTING ASSY - PORT WING OUTER PANEL ROCKET ATTACHING REAR STA 124 (SEE SECT. 1)		REF
-19	152-14176-1	FITTING ASSY - PORT WOP ROCKET ATTACHING REAR STA 127 & 138 & 161(SEE SECT.1)		REF
-20	151-14578-1	FITTING ASSY - PORT WING OUTER PANEL ROCKET ATTACHING REAR STA 142 (SEE SECT. 1)		REF
-21	151-14579-1	FITTING ASSY - PORT WING OUTER PANEL ROCKET ATTACHING REAR STA 151 (SEE SECT. 1)		REF
-22	152-14180-1	FITTING ASSY - PORT WING OUTER PANEL ROCKET ATTACHING REAR STA 166 (SEE SECT. 1)		REF

-000-

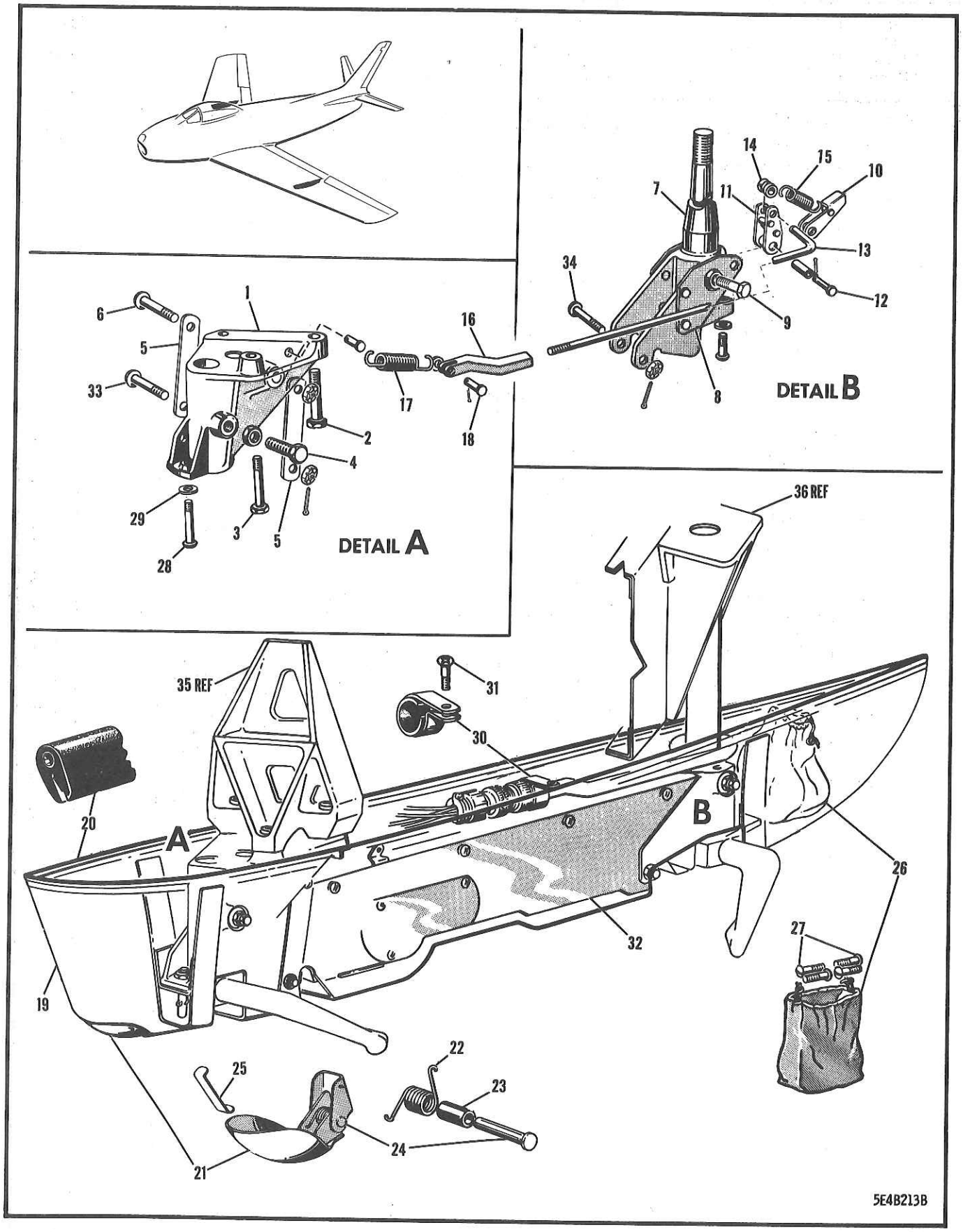

FIGURE 311 BOMB RACK

FIGURE AND INDEX NUMBER	GROUP LOOSE EQUIPMENT MAJOR ASSEMBLY BOMB RACK PART NUMBER	1234567 NOMENCLATURE	CODE	UNITS PER ASSY
311 -	151-63002-840	KIT INSTL - BOMB RACK (SEE FIG. 307)	001-210	NP
	151-63002-801	KIT INSTL - BOMB RACK	211-490	NP
	151-63002-850	KIT INSTL - BOMB RACK	491-	NP
- 1	140-63005-11	.SUPPORT ASSY - O/W BOMB RACK FWD (PORT)		1
	140-63005-12	.SUPPORT ASSY - O/W BOMB RACK FWD (STBD)		1
- 2	AN6-20A	.BOLT -		4
- 3	AN4-17A	.BOLT -		2
- 4	140-63009	.STUD - O/W BOMB RACK SWAY-BRACE ADJ MPI		2
	AN316-6R	.NUT -		2
- 5	140-63010	.LINK - O/W BOMB RACK FWD SUPPORT	A47	2
	140-63010-950	.LINK - O/W BOMB RACK FWD SUPPORT	A47	2
	140-63010	.LINK - O/W BOMB RACK FWD SUPPORT	211-490	4
- 6	AN25-31	.BOLT -		2
	AN960-516	.WASHER -		2
	AN320-5	.NUT -		2
	AN380-2-2	.COTTER-PIN -		2
- 7	172-63230-10	.SUPPORT ASSY - OUTER WING BOMB RACK REAR		2
	157-63006-10	..SUPPORT ASSY - OUTER WING BOMB RACK REAR		1
	157-63006-5	...SUPPORT - OUTER WING BOMB RACK REAR MPI		1
	RD206SH-6.5L	...INSERT - LOCKED-IN (ROS)		1
	RL27SB-8	...LOCK-RING - STANDARD (ROS)		1
- 8	172-63230-3	..PLATE - OUTER WING BOMB RACK REAR LH		1
	172-63230-4	..PLATE - OUTER WING BOMB RACK REAR RH		1
	172-63230-5	..CHANNEL - OUTER WING BOMB RACK REAR		1
- 9	117-63230	.STUD - STANDARD BOMB RACK SWAY-BRACE ADJUSTING MPI		2
	AN316-6R	.NUT -		2
-10	172-63225	.LEVER ASSY - MANUAL BOMB JETTISON	001-210	2
-11	172-63228	.LINK ASSY - MANUAL BOMB JETTISON	001-210	2
-12	AN393-37	.PIN -	001-210	2
	4B21S3-100	.BUSHING - SPACER (NAA)	001-210	2
	AN380-2-3	.COTTER-PIN -	001-210	2
-13	172-63223	.ROD - MANUAL BOMB JETTISON	001-210	2
-14	172-63226	.SPACER - MANUAL BOMB JETTISON	001-210	2
	AN380-2-3	.COTTER-PIN -	001-210	2
-15	172-63227	.SPRING - TENSION	001-210	2
-16	170-63222	.FITTING - MANUAL BOMB JETTISON	001-210	2
-17	130-58557	.SPRING - HYDRAULIC NOSE GEAR DOOR SEQUENCE VALVE MECHANISM	001-210	2
-18	AN393-13	.PIN -	001-210	4
	AN960D10	.WASHER -	001-210	4
	AN380-2-2	.COTTER-PIN -	001-210	4
-19	151-63015-841	.FAIRING ASSY - OUTER WING BOMB RACK (PORT)	A47	1
	151-63015-41	.FAIRING ASSY - OUTER WING BOMB RACK (PORT)	211-490	1
	151-63015-842	.FAIRING ASSY - OUTER WING BOMB RACK (STBD)	A47	1
	151-63015-42	.FAIRING ASSY - OUTER WING BOMB RACK (STBD)	211-490	1
-20	151-63015-19	..SEAL - OUTER WING BOMB RACK FAIRING		1
-21	151-63016	..DOOR ASSY - O/W BOMB RACK FAIR. ELEC RECP		1
-22	151-63017	...SPRING - O/W BOMB RACK FAIRING ELEC RECEPTACLE DOOR		1
-23	4S3D4-16	...SPACER - BOLT (NAA)		1
-24	AN392-23	...PIN -		1
	AN380-2-1	...COTTER-PIN -		1
-25	151-63018	..LATCH - O/W BOMB RACK FAIRING ELECTRICAL RECEPTACLE DOOR		1
-26	151-63019	..BAG ASSY - O/W BOMB RACK SWAY-BRACE SCREW STORAGE		1
27	NAS222-14	..SCREW -		4
-28	140-63011	..SCREW - O/W BOMB RACK FAIRING ATTACHING		2
-29	2W1-17-18-32	..WASHER - PLAIN (NAA)		4

FIGURE AND INDEX NUMBER	GROUP LOOSE EQUIPMENT MAJOR ASSEMBLY BOMB RACK PART NUMBER	1234567 NOMENCLATURE	CODE	UNITS PER ASSY
311 -	AN380-2-2	••COTTER-PIN -		2
-30	AN742D21C	•CLAMP -		2
-31	NAS221-12	•SCREW -		2
-32	SPEC 24993	•RACK - BOMB TYPE S2 (G•F•E•)		2
-33	AN25-31	•BOLT -		2
-34	AN25-32	•BOLT -		2
	AN960-516	•WASHER -		4
	AN320-5	•NUT -		4
	AN380-2-2	•COTTER-PIN -		2
-35	152-14089-9	FITTING ASSY - PORT WOP FORWARD SPAR BOMB SUPPORT ATTACHING (SEE SECTION 1)		REF
-36	152-14124-15	FITTING ASSY - PORT WING STA 126 REAR BOMB RACK SWAY-BRACE (SEE SECTION 1)		REF
		-000-		

PART 3

SPECIAL SERVICE TOOL LIST

TABLE OF CONTENTS

FIGURE	TITLE	PAGE
312	WING SERVICE TOOLS	1288
313	FUSELAGE & MAIN & NOSE GEAR & EMPENNAGE SERVICE TOOLS	1290
314	SPECIAL WRENCHES & ADAPTERS	1292
315	SPECIAL WRENCHES & ADAPTERS	1294
316	ARMAMENT SPECIAL TOOLS	1296
317	GROUND HANDLING DOLLIES	1298
318	GROUND HANDLING EQUIPMENT	1300
319	ENGINE GUIDE SLING	1302
320	ENGINE SLING CARRIAGE	1306
321	GENERAL PURPOSE EQUIPMENT	1310
322	TEST EQUIPMENT	1312

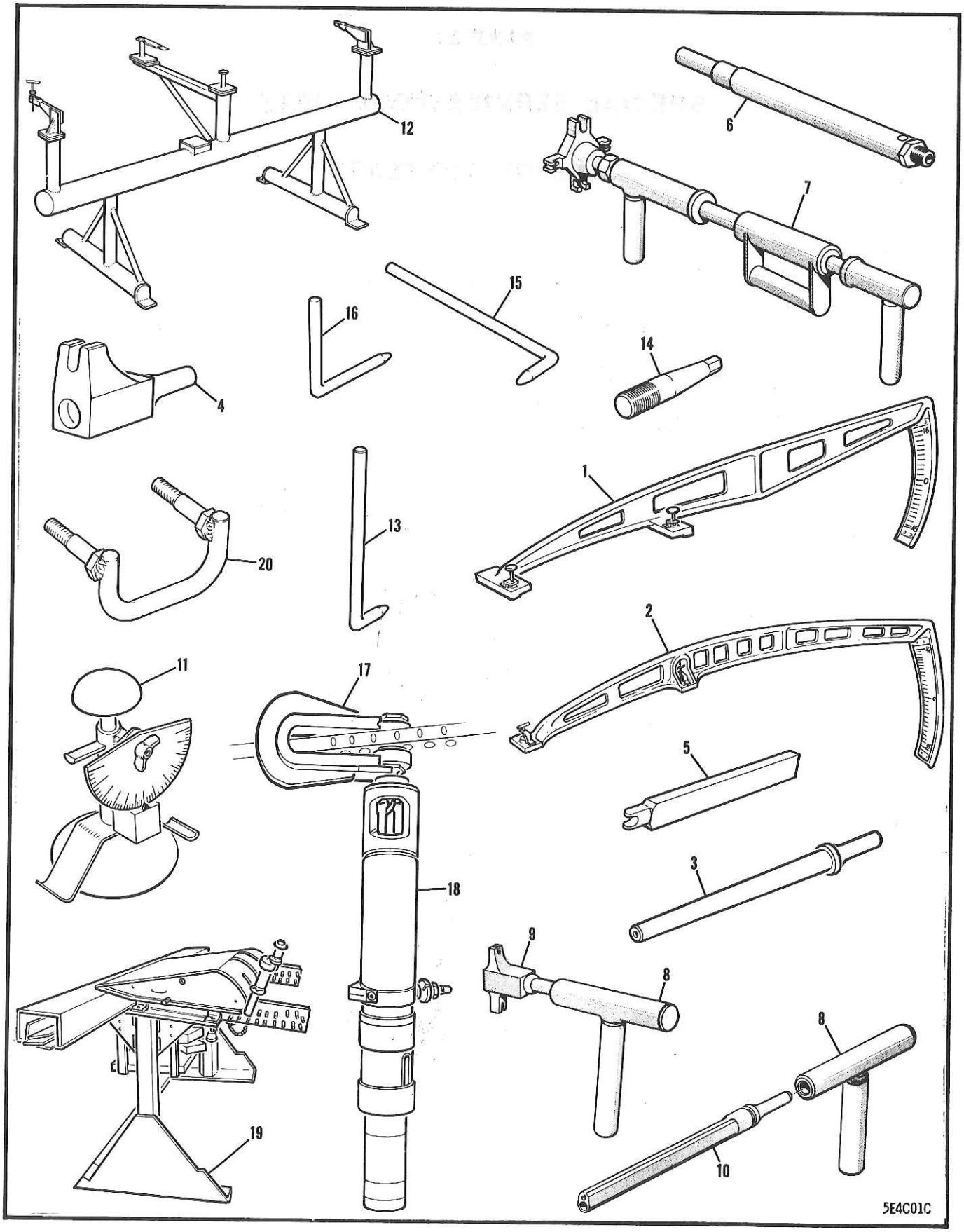

FIGURE 312 WING SERVICE TOOLS

FIGURE AND INDEX NUMBER	GROUP SERVICE TOOLS MAJOR ASSEMBLY WING SERVICE TOOLS PART NUMBER	1234567 NOMENCLATURE	CODE	UNITS PER ASSY
312 -		MAINTENANCE & OVERHAUL TOOLS		
- 1	CJ19693LH	JIG - AILERON TRAVEL CHECKING		1
	CJ19693RH	JIG - AILERON TRAVEL CHECKING		1
	HF30117	CASE - AILERON TRAVEL CHECKING JIG		1
- 2	T-20588	JIG - FLAP MOVEMENT LH & RH CHECKING		1
		OR		
	CJ-20588	JIG - FLAP MOVEMENT LH & RH CHECKING		
- 3	GT994320	TOOL - WING HINGE-PIN REMOVAL & INSTL		1
- 4	PE-R-248-1	TOOL - WING HINGE-PIN REMOVAL & INSTL		1
- 5	SF42684	FORK - WING BOLT REMOVER		1
- 6	T233	DRIVER GUIDE - OUTER PANEL HINGE-PIN INSTL		1
- 7	T231	PUSHER & PULLER - O/PNL HINGE-PIN INSTL		1
	T307	TOOL SET - WING HINGE-PIN INSTL & REMOVER		1
- 8	T309	•HANDLE ASSY - WING HINGE-PIN INSTALLER & REMOVER		1
- 9	T308	•TOOL - WING HINGE-PIN REMOVAL		1
-10	T310	•TOOL - WING HINGE-PIN INSTALLATION		1
	T71	PROTRACTOR ASSY - SURFACE CONTROL		1
-11	T158	•PROTRACTOR ASSY - SURFACE CONTROL		1
	T191	•CONTAINER ASSY - SURFACE CTL PROTRACTOR		1
		OVERHAUL TOOLS		
-12	BJ232869-3	JIG - AILERON BALANCING		1
-13	HF19684	PIN - WING OUTER PANEL TO CTR/SECT 12-IN•		1
-14	HF21828	PIN - FUSELAGE TO WING ATT GUIDE - 4-1/4		1
	T268	PIN - FUSELAGE TO WING ATTACHMENT ALIGNING		1
-15	HF21859	PIN - WING MATING ALIGNING 12-IN•		1
-16	MST31042	PIN - WING ATTACHMENT FITTING ALIGNING		1
	SF40792	DRILL GUIDE - BOLTING ANGLE		1
-17	SF42724	FIXTURE - DRILLING WING		1
-18	926P-18	AIRFEEDRILL - KELLAR (BBR)		1
-19	T98412	JIG - TRAILING EDGE RIVETING		1
		OR		
	RJ98412	JIG - TRAILING EDGE RIVETING		
-20	SF42044	FIXTURE - WING INSTL COMPLETE SPECIAL		1

-000-

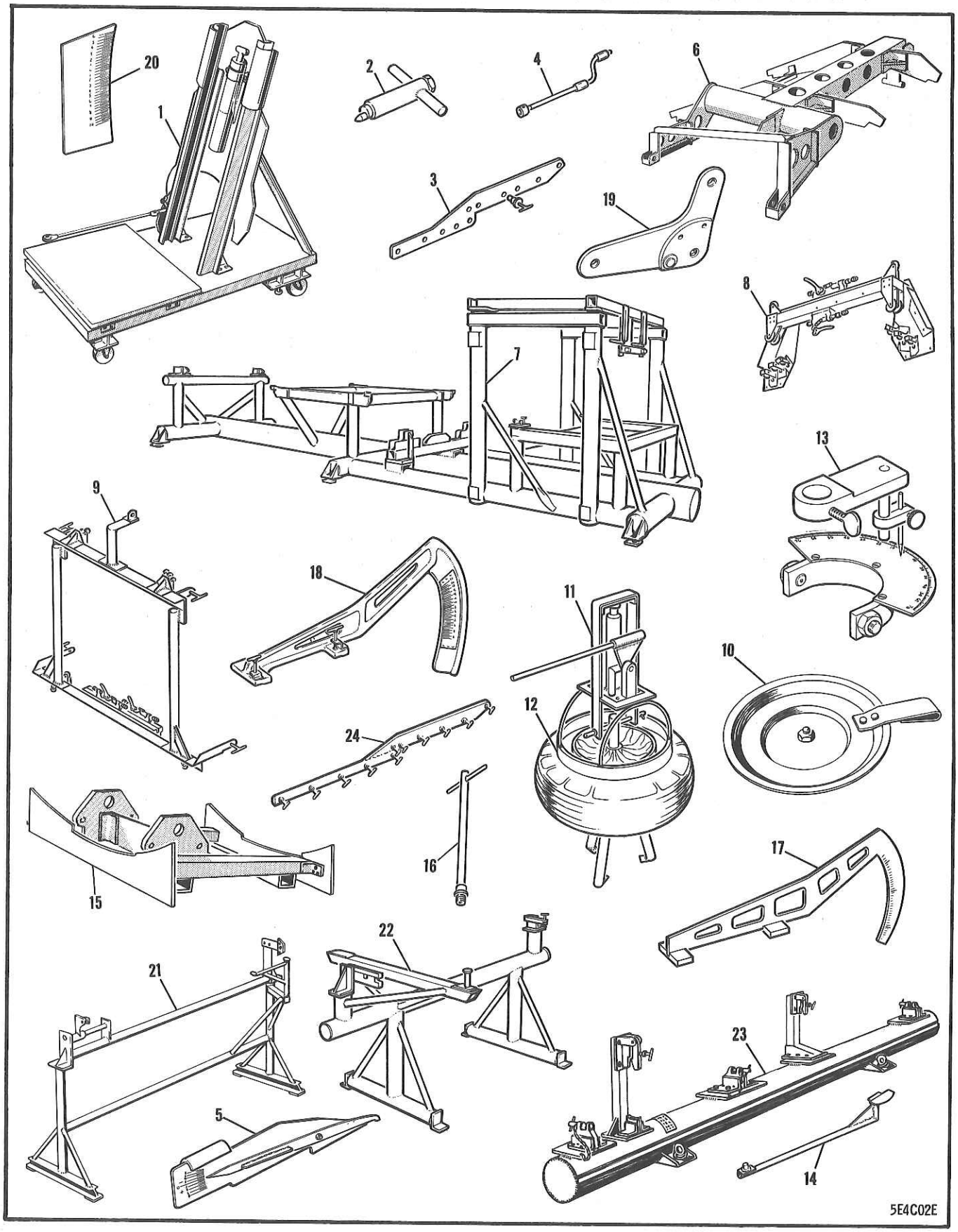

FIGURE 313 FUSELAGE & GEAR & EMPENNAGE SERVICE TOOLS

FIGURE AND INDEX NUMBER	GROUP / MAJOR ASSEMBLY / PART NUMBER	SERVICE TOOLS / FUSELAGE & GEAR & EMPENNAGE SERVICE TOOLS / 1234567 NOMENCLATURE	CODE	UNITS PER ASSY
313 -		FUSELAGE MAINTENANCE & OVERHAUL TOOLS		
- 1	CJ24946	JIG - SEAT ADJUSTING CHECKING		1
- 2	HF29524	KEY - FWD & REAR FUSELAGE MATING ALIGNMENT		1
- 3	SF26870	JIG - ASPIRATOR ALIGNMENT INSTALLATION		1
- 4	191-31645-800	HANDLE ASSY - FUSELAGE RADIO ACCESS DOOR ELEVATOR MECHANISM		1
- 5	CJ30130	JIG - DUCT & ENGINE ALIGNING CHECKING		1
		FUSELAGE OVERHAUL TOOLS		
- 6	SF26872	JIG - SPEEDBRAKE HYDRAULIC JACK MOUNTING		1
- 7	SF31402	JIG - PICK-UP FORWARD FUSELAGE		1
- 8	T229608	FIXTURE - FORWARD FUSELAGE RIGGING		1
- 9	T229609	FIXTURE - REAR FUSELAGE RIGGING		1
		MAIN & N/GR MAINTENANCE & OVERHAUL TOOLS		
-10	HF13039-110B	TURNTABLE - NOSE GEAR		1
-11	PE2503-249M	APPARATUS ASSY - SABRE TIRE REMOVER		1
-12	PE2503-249M-207	•RING - NOSE GEAR REMOVING ADAPTER		1
-13	T234485	PROTRACTOR & POINTER - NOSE GEAR		1
-14	RF39539	GAUGE - NOSE WHEEL ALIGNMENT		1
		MAIN & NOSE GEAR OVERHAUL TOOLS		
-15	SF26871	JIG - NOSE GEAR TRUN PIN MOUNTING CENTRING		1
-16	T232	PUSHER & PULLER - MAIN GEAR TRUNNION PIN		1
		EMPENNAGE MAINTENANCE & OVERHAUL TOOLS		
-17	T19836	JIG - RUDDER MOVEMENT CHECKING OR		1
	CJ19836	JIG - RUDDER MOVEMENT CHECKING (IDENTICAL TO T19836)		
-18	T-19931	JIG - ELEVATOR MOVEMENT CHECKING OR		1
	CJ-19931	JIG - ELEVATOR MOVEMENT CHECKING		
-19	DJ38390	PLATE - DRILL JIG		1
-20	CT25239	CHECKING TOOL - HOR/STAB MOVEMENT		1
		EMPENNAGE OVERHAUL TOOLS		
-21	BJ220588	JIG - RUDDER BALANCING		1
-22	BJ232868-3	JIG - ELEVATOR BALANCING		1
-23	SF26869	JIG - ELEVATOR TORQUE TUBE CENTRING		1
-24	SF26870	JIG - ASPIRATOR INSTL & ALIGNING		1

-000-

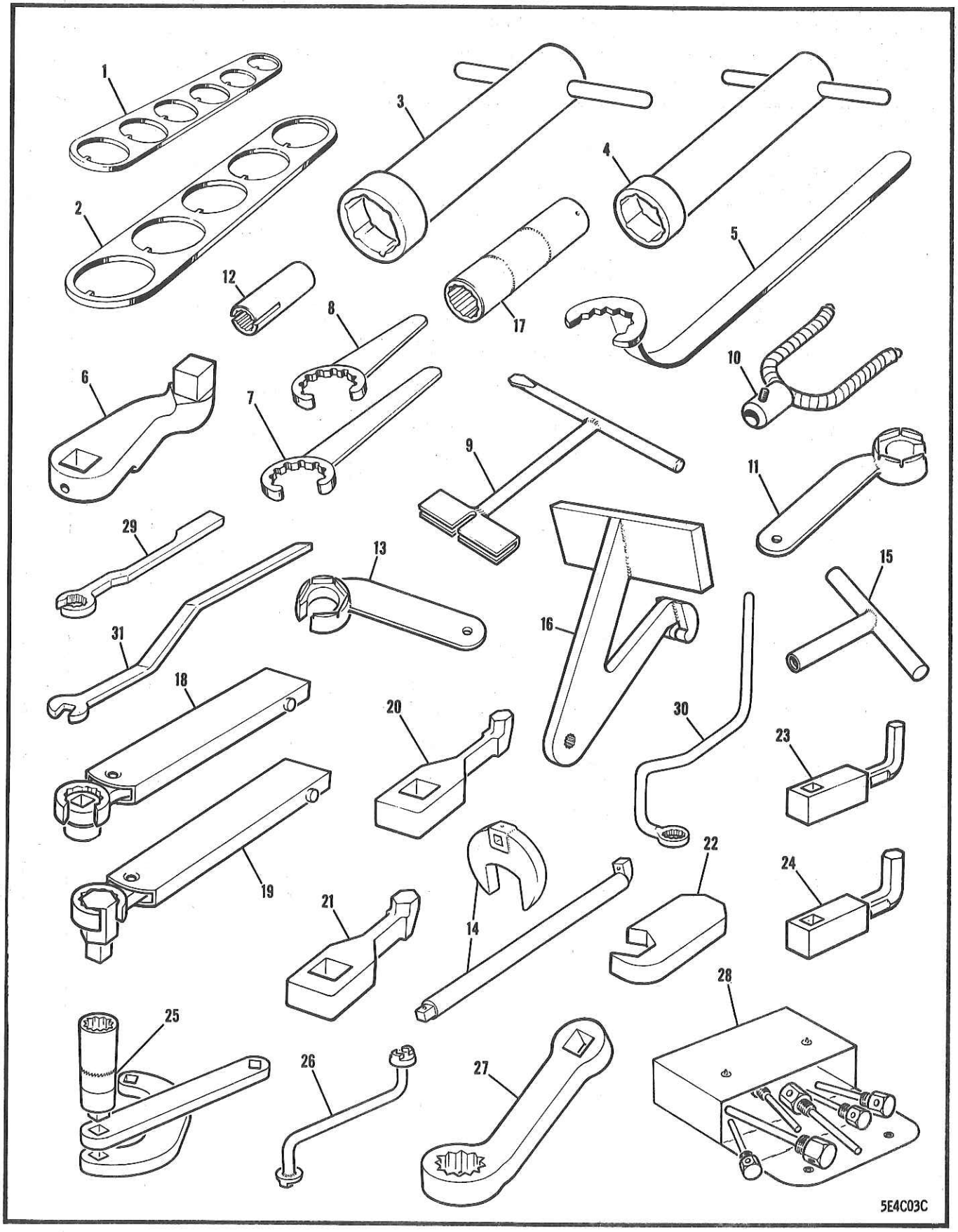

FIGURE 314 SPECIAL WRENCHES & ADAPTERS

FIGURE AND INDEX NUMBER	GROUP SERVICE TOOLS MAJOR ASSEMBLY SPECIAL WRENCHES & ADAPTERS PART NUMBER 1234567 NOMENCLATURE	CODE	UNITS PER ASSY
314 -	MAINTENANCE & OVERHAUL SPECIAL WRENCHES & ADAPTERS		
- 1	GT29399 WRENCH - CANNON PLUG		1
- 2	GT29400 WRENCH - CANNON PLUG		1
- 3	HF22687 WRENCH - 3/4-IN. HOSE QUICK DISCONNECT NUT		1
- 4	HF22688 WRENCH - 1/2-IN. HOSE QUICK DISCONNECT NUT		1
- 5	HF23004 WRENCH - MAIN WHEEL RETAINING NUT		1
- 6	HF29822 ADAPTER - FLAP TRACK TORQUE LH & RH		1
- 7	HF29823 WRENCH - 1/2-IN. HOSE QUICK DISCONNECT NUT		1
- 8	HF29824 WRENCH - MAIN GEAR UPLOCK JAM-NUT RING		1
- 9	MST30680 WRENCH - FUEL FILLER CAP		1
	OR		
	MST29072 WRENCH - FUEL FILLER CAP		
-10	MST30993 ADAPTER - PUSH SCALE		1
-11	MST31038 WRENCH - MAIN GEAR UPLOCK JAM-NUT RING LH		1
-12	MST31040 WRENCH - FUEL DEEP INTERCONNECTOR		1
-13	MST31137 WRENCH - MAIN GEAR UPLOCK JAM RING RH		1
-14	K21507 WRENCH - CROW FOOT SQUARE DRIVE OPEN END		1
-15	MST34775 WRENCH - ORENDA TAPER PIN REMOVER		1
-16	T-250676 ADAPTER - BRAKE PEDAL TORQUE		1
-17	MST31037 SOCKET - FUEL TANK CONNECTOR SPECIAL		1
	OVERHAUL SPECIAL WRENCHES & ADAPTERS		
-18	MST31005 WRENCH - TORQUE STOP		1
-19	MST31006 WRENCH - TORQUE STOP		1
-20	MST31032 ADAPTER - TORQUE WRENCH - 3/8-IN.		1
-21	MST31033 ADAPTER - TORQUE WRENCH - 1/2-IN.		1
-22	MST31039 WRENCH - REAR SPAR ATTACHING CAP		1
-23	MST36631 ADAPTER - TORQUE EMPENNAGE ATT BOLT - 3/8		1
-24	MST36632 ADAPTER - TORQUE EMPENNAGE ATT BOLT - 1/2		1
-25	MST39936 WRENCH & ADAPTER SET - M/LDG/GR FTG TORQUE		1
-26	MST43305 WRENCH - DOUBLE-ENDED		1
-27	T-J-503-25 ADAPTER - Y-BOLT HOR/STAB TORQUE		1
-28	597 TOOL KIT - COMPLETE WITH TOOL BAG (PPE) (FOR HOSE LINES -3 THROUGH -12)		1
	1595-5 •BAG - TOOL		1
	583-3 •TOOL - (TUBE 3/16 OD)		1
	1582-4 •TOOL - (TUBE 1/4 OD)		1
	1582-5 •TOOL - (TUBE 5/16 OD)		1
	583-6 •TOOL - (TUBE 3/8 OD)		1
	1582-8 •TOOL - (TUBE 1/2 OD)		1
	1582-10 •TOOL - (TUBE 5/8 OD)		1
	583-12 •TOOL - (TUBE 3/4 OD)		1
	1563-16 •TOOL - (TUBE 1 OD)		1
	1563-20 •TOOL - (TUBE 1-1/4 OD)		1
	1563-24 •TOOL - (TUBE 1-1/2 OD)		1
	1563-32 •TOOL - (TUBE 2 OD)		1
	1563-40 •TOOL - (TUBE 2-1/2 OD)		1
	1563-48 •TOOL - (TUBE 3 OD)		1
-29	MST40109 WRENCH - VEE TUBE AIR EJECTOR SPECIAL		1
-30	MST40110 WRENCH - VEE TUBE AIR EJECTOR SPECIAL		1
-31	MST40108 WRENCH - VEE TUBE AIR EJECTOR SPECIAL		1

-000-

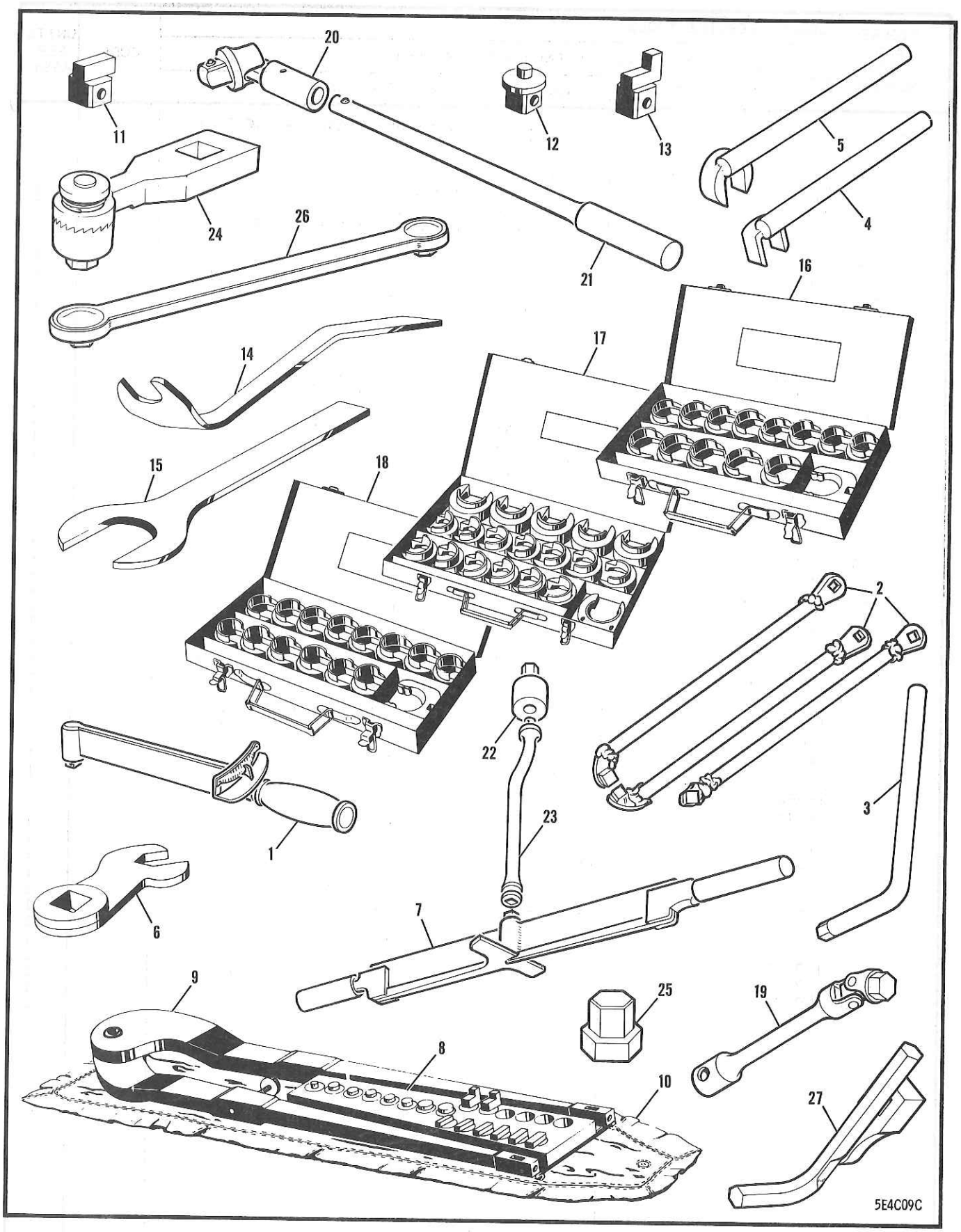

FIGURE 315 SPECIAL WRENCHES & ADAPTERS

FIGURE AND INDEX NUMBER	GROUP SERVICE TOOLS MAJOR ASSEMBLY SPECIAL WRENCHES & ADAPTERS PART NUMBER	1234567 NOMENCLATURE	CODE	UNITS PER ASSY
315 -		MAINTENANCE & OVERHAUL SPCL WRENCHES & ADPT		
- 1	F50	WRENCH - STURDEVANT TORQUE		1
	F150	WRENCH - STURDEVANT TORQUE		1
	F300	WRENCH - STURDEVANT TORQUE		1
	F300-1	WRENCH - STURDEVANT TORQUE		1
	F600-1	WRENCH - STURDEVANT TORQUE		1
- 2	SF42043	ADAPTER SET - TORQUE O/W PANEL (3 PIECES)		1
- 3	SF42606	WRENCH - FRONT SPAR LOWER ATTACHING NUT		1
- 4	SF42690	WRENCH - REAR SPAR ATTACHING FTG LH & RH		1
- 5	SF42691	WRENCH - REAR SPAR ATTACHING FITTING		1
- 6	ST28064	ADAPTER - DROP TANK TORQUE WRENCH		1
		OR		
	MST28064	ADAPTER - DROP TANK TORQUE WRENCH		
- 7	TF600	WRENCH - STURDEVANT TWO-MAN TORQUE		1
	T-49B	WRENCH SET - (SNA) (ADJUSTABLE SPANNER)		1
- 8	T49B8	•BLOCK ADAPTER - ADJUSTABLE SPANNER WRENCH		1
- 9	T49B12	•WRENCH ASSY - ADJUSTABLE SPANNER		1
-10	T49B13	•BAG ASSY - ADJUSTABLE SPANNER WRENCH SET		1
-11	T49B14	•ADAPTER - 1/8-IN.		2
	T49B15	•ADAPTER - 2/16-IN.		2
	T49B16	•ADAPTER - 1/4-IN.		2
-12	T49B17	•ADAPTER - 1/8-IN. ROUND		2
	T49B18	•ADAPTER - 3/16-IN. ROUND		2
	T49B19	•ADAPTER - 1/4-IN. ROUND		2
	T49B20	•ADAPTER - 3/32-IN. ROUND		2
-13	T49B21	•ADAPTER - 5/32-IN. OFFSET		2
-14	T224	WRENCH - REAR MOUNT VERT ADJUSTABLE OPEN END OFF SET 1-IN.		1
-15	T225	WRENCH - REAR MOUNT RTNR NUT OPEN END 1-1/2		1
-16	TAC1376	WRENCH SET - (HCJ) (OPEN END RATCHET)		1
-17	TAC2060	WRENCH SET - (HCJ) (OPEN END RATCHET)		1
-18	TAC2001	WRENCH SET - (HCJ) (OPEN END RATCHET)		1
-19	TJ507-99-101-1S	UNIVERSAL - WING OUTER PANEL TO CENTRE SECTION ATTACHING BOLT		1
	TJ507-99-101-2S	UNIVERSAL - WING OUTER PANEL TO CENTRE SECTION ATTACHING BOLT		1
		OVERHAUL SPECIAL WRENCHES & ADAPTERS		
	L-112DH	NUT SPINNER - HEAVY DUTY (SNA) (COMPLETE WITH HANDLE)		1
-20	L112D	•HEAD - NUT SPINNER (SNA)		
-21	L-72H	•HANDLE - NUT SPINNER BAR (SNA)		1
	MST31036	ADAPTER & EXTENSION ASSY - WING TO FUSELAGE BOLT		1
-22	MST31036-101	•ADAPTER - WING TO FUSELAGE BOLT		1
-23	MST31036-102	•EXTENSION - WING TO FUSELAGE BOLT		1
-24	MST40317	ADAPTER - RATCHET HEAD WING OUTER PANEL TO CTR/SECT ATTACHING BOLT (LH & RH)		1
-25	MST40318	ADAPTER - HEXAGON TORQUE WRENCH		1
-26	T264	WRENCH ASSY - WING JOINT UPPER ATT BOLT		1
-27	986-1002	ADAPTER - CENTRE WING TORQUE (1/2-IN.)		1
	986-1002	ADAPTER - CENTRE WING TORQUE (3/8-IN.)		1
		-000-		

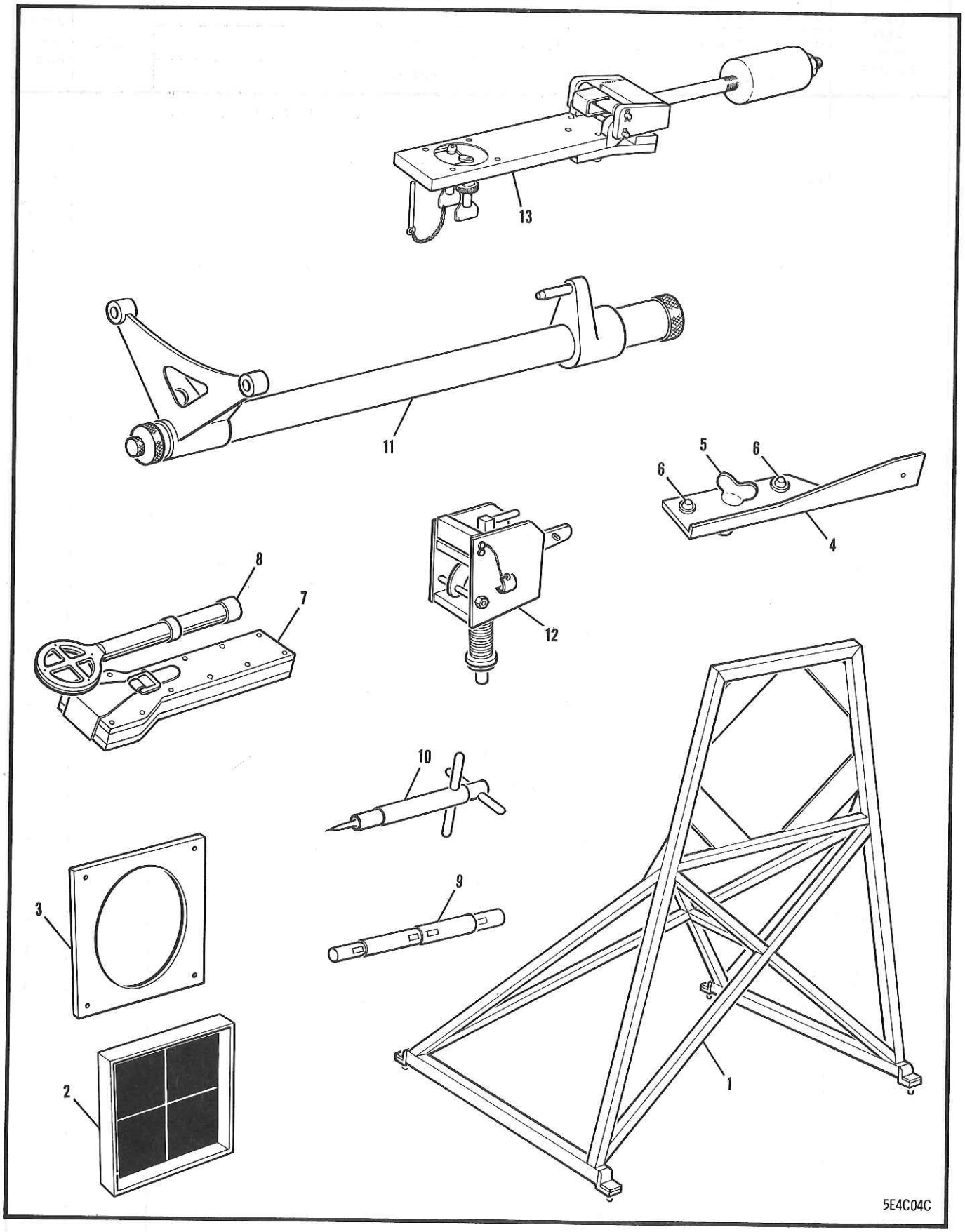

FIGURE 316 ARMAMENT SPECIAL TOOLS

FIGURE AND INDEX NUMBER	GROUP SERVICE TOOLS MAJOR ASSEMBLY ARMAMENT SPECIAL TOOLS PART NUMBER	1234567 NOMENCLATURE	CODE	UNITS PER ASSY
316 -		SPECIAL ARMAMENT TARGET MAINTENANCE & OVERHAUL EQUIPMENT		
- 1	T280246	TARGET ASSY - GUNSIGHT		1
- 2	T280246-101	•PLATE - GUNSIGHT TARGET DRILL		1
- 3	T280246-108	•TARGET - GUNSIGHT		1
- 4	T266-800	PEEPSIGHT ASSY - FIXED GUN BORE-SIGHT ALIGNING FIXTURE		1
- 5	W98292-3-290	•STUD - WING TYPE ROUNDHEAD AIRLOC FASTENER (MKM)		1
	99836	•CROSS-PIN - AIRLOC FASTENER (MKM)		1
	AN960D10	•WASHER - FLAT		2
- 6	2R6-6-3-4	•STUD - HI-SHEAR RIVET (NAA)		2
	2R4-6	•COLLAR - HI-SHEAR RIVET (NAA)		2
	T254	INDICATOR ASSY - GUN BORE-SIGHT TARGET ALIGNING		1
- 7	T228	•BOX ASSY - BORE-SIGHT TARGET ALIGNING FIX• OR		1
	T480	•BOX ASSY - BORE-SIGHT TARGET ALIGNING FIX•		
- 8	T229	•RING SIGHT ASSY - BORE-SIGHT TARGET ALIGNING		1
- 9	G23103	GAUGE - ROCKET MOUNT		1
-10	ST23166	ADJUSTING TOOL - ROCKET ARMING SOLENOID		1
-11	T228161	SCOPE - ROCKET ALIGNING		1
-12	T240346	CHECKING TOOL - ROCKET JETTISON		1
-13	T23102	CHECKING TOOL - ROCKET ARMING SOL (ENERG)		1

-000-

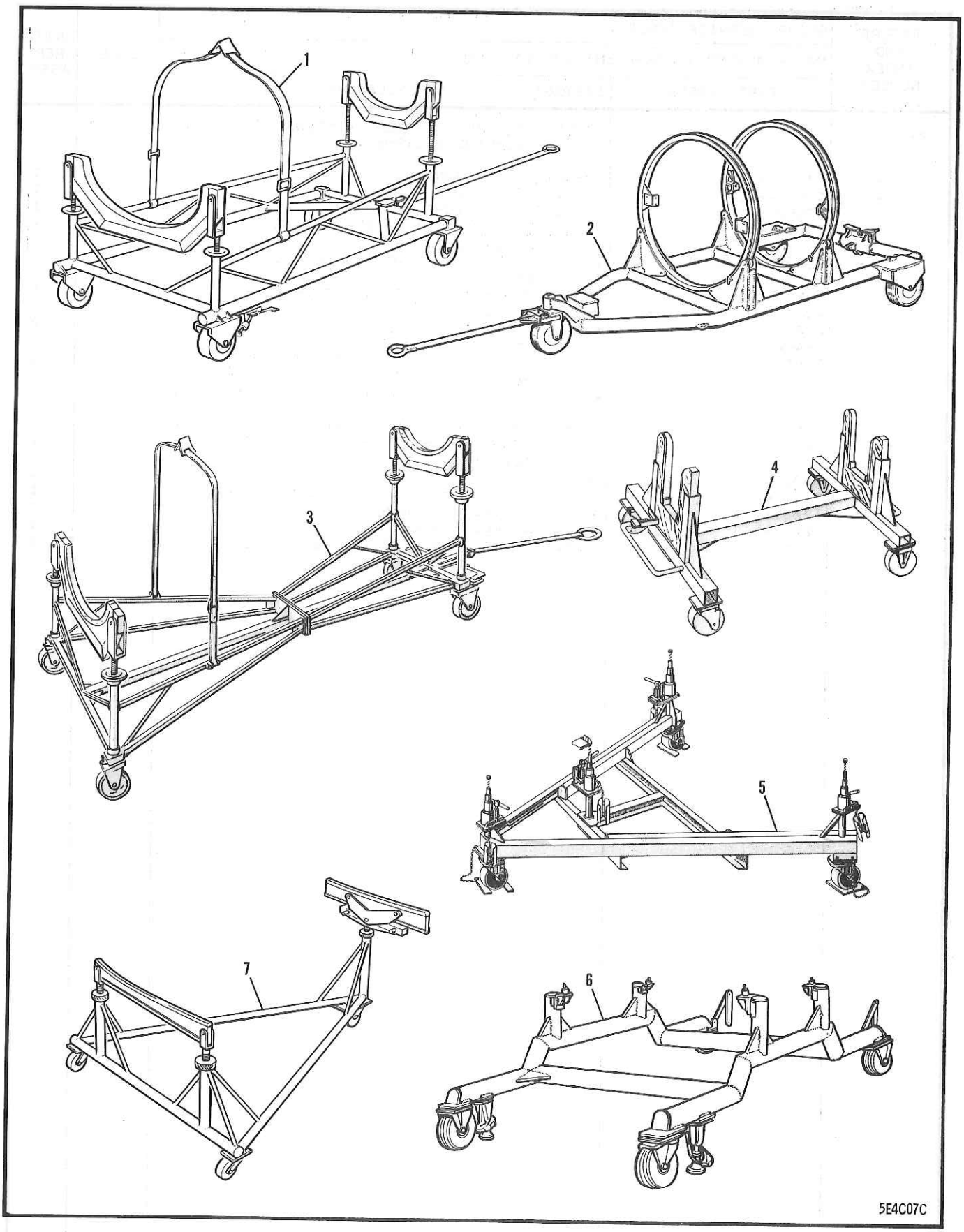

FIGURE 317 GROUND HANDLING DOLLIES

FIGURE AND INDEX NUMBER	GROUP SERVICE TOOLS MAJOR ASSEMBLY GROUND HANDLING DOLLIES PART NUMBER	1234567 NOMENCLATURE	CODE	UNITS PER ASSY
317 -		GROUND HANDLING MAINTENANCE & OVERHAUL DOLLIES		
- 1	HF22733	DOLLY & CRADLE ASSY - REAR FUSELAGE TYPE A3		1
- 2	HF22978	DOLLY - ENGINE MAINTENANCE (MODIFIED TO SB-F86-321)		1
- 3	HF35319	DOLLY & CRADLE ASSY - REAR FUSELAGE		1
		GROUND HANDLING OVERHAUL DOLLIES		
- 4	HF13021-288	DOLLY - CENTRE WING SECTION		1
- 5	HF27705	DOLLY - COMPLETE WING & CENTRE SECTION SUP.		1
- 6	HF31553	DOLLY - FORWARD FUSELAGE UTILITY		1
- 7	HF32047	DOLLY - OUTER WING PANEL LH & RH		1
		-000-		

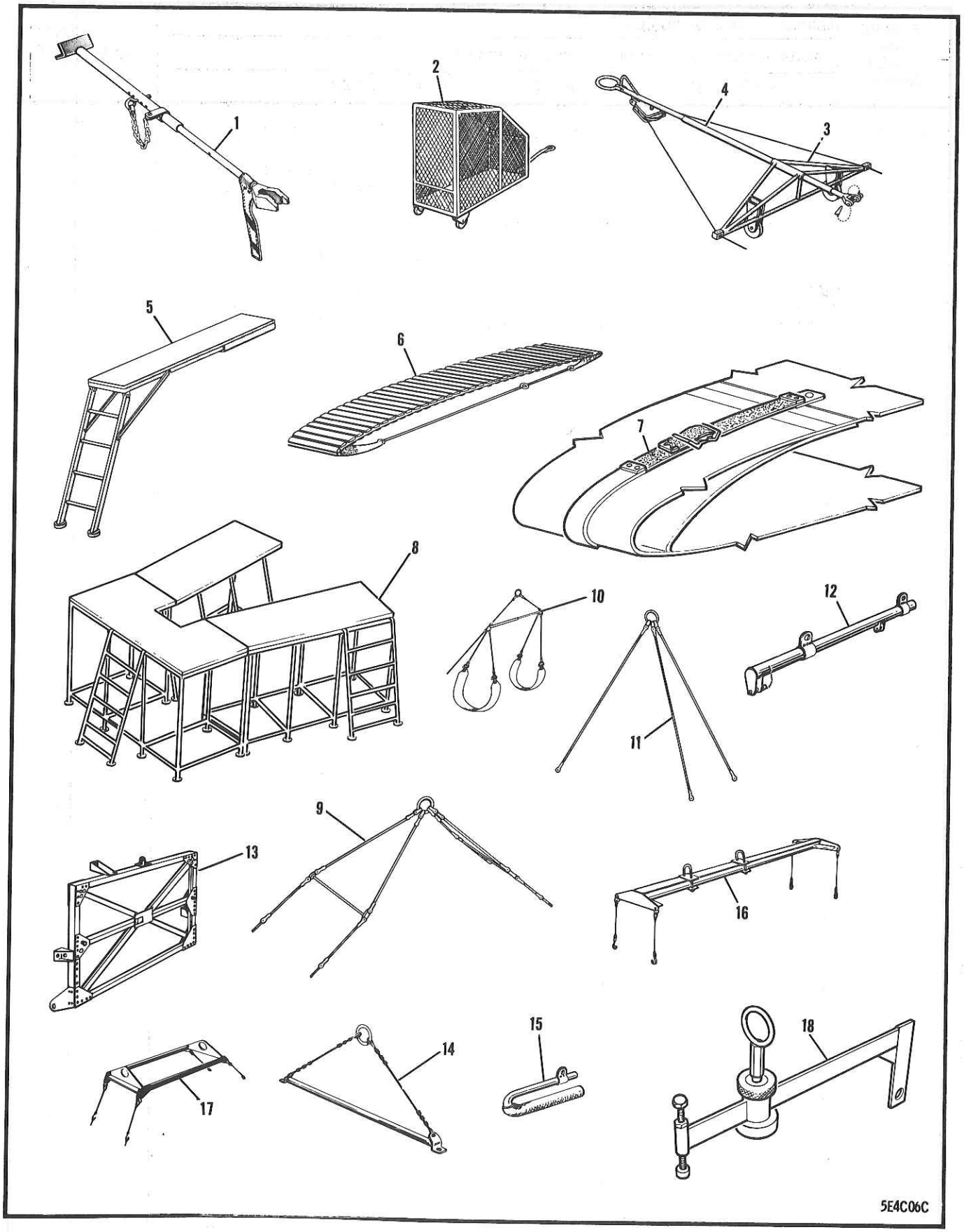

FIGURE 318 GROUND HANDLING EQUIPMENT

FIGURE AND INDEX NUMBER	GROUP SERVICE TOOLS MAJOR ASSEMBLY GROUND HANDLING EQUIPMENT PART NUMBER	1234567 NOMENCLATURE	CODE	UNITS PER ASSY
318 -		GROUND HANDLING MAINTENANCE EQUIPMENT		
- 1	E1601-19	LOCK ASSY - NOSE GEAR DOOR OPEN POSN GROUND (SUPES E1601 FOR FUTURE PROCUREMENT)		1
	AN742-3	•CLAMP -		1
	AN742-12	•CLAMP -		1
	AN515-8R7	•SCREW -		2
	AN960-8L	•WASHER -		2
	AN365-832	•NUT -		2
		GROUND HANDLING MAINTENANCE & OVERHAUL EQUIPMENT		
- 2	HF13039-36	SCREEN - NOSE COVER FOR RUN-UP		1
- 3	HF23414	BAR CABLE & WEDGE ASSY - TOWING		1
- 4	HF23414-201	•BAR - TOWING		1
- 5	HF42673	LADDER & PLATFORM - SERVICING PORTABLE (REPLACES HF23731)		1
- 6	151-73073	MAT ASSY - WING WALKWAY		1
- 7	E1693	STRAP ASSY - SLAT GROUND RETAINING		1
- 8	PE-2504-117-M	STAND - SABRE FLIGHT HANGAR TAIL WORK		1
		GROUND HANDLING OVERHAUL EQUIPMENT		
- 9	E974	SLING ASSY - COMPLETE AIRCRAFT HOISTING		1
-10	E975	SLING ASSY - FUSELAGE REAR SECT• HOISTING		1
-11	E976	SLING ASSY - WING PANEL OUTER HOISTING		1
-12	HF13021-309	PIVOT TUBE - WING ALIGNING FIXTURE LH & RH		1
-13	HF13021-311	ALIGNING FIXTURE - WOP TUBE LH & RH		1
-14	HF13021-315	SLING - WING CENTRE SECTION		1
-15	HF13039-108	SLING - JET ENGINE CONE		1
-16	HF19849	SLING - FORWARD FUSELAGE		1
-17	HF19888	SLING - FUSELAGE TO WING MATING		1
-18	T97829	PULLER - TURBINE WHEEL		1
		-000-		

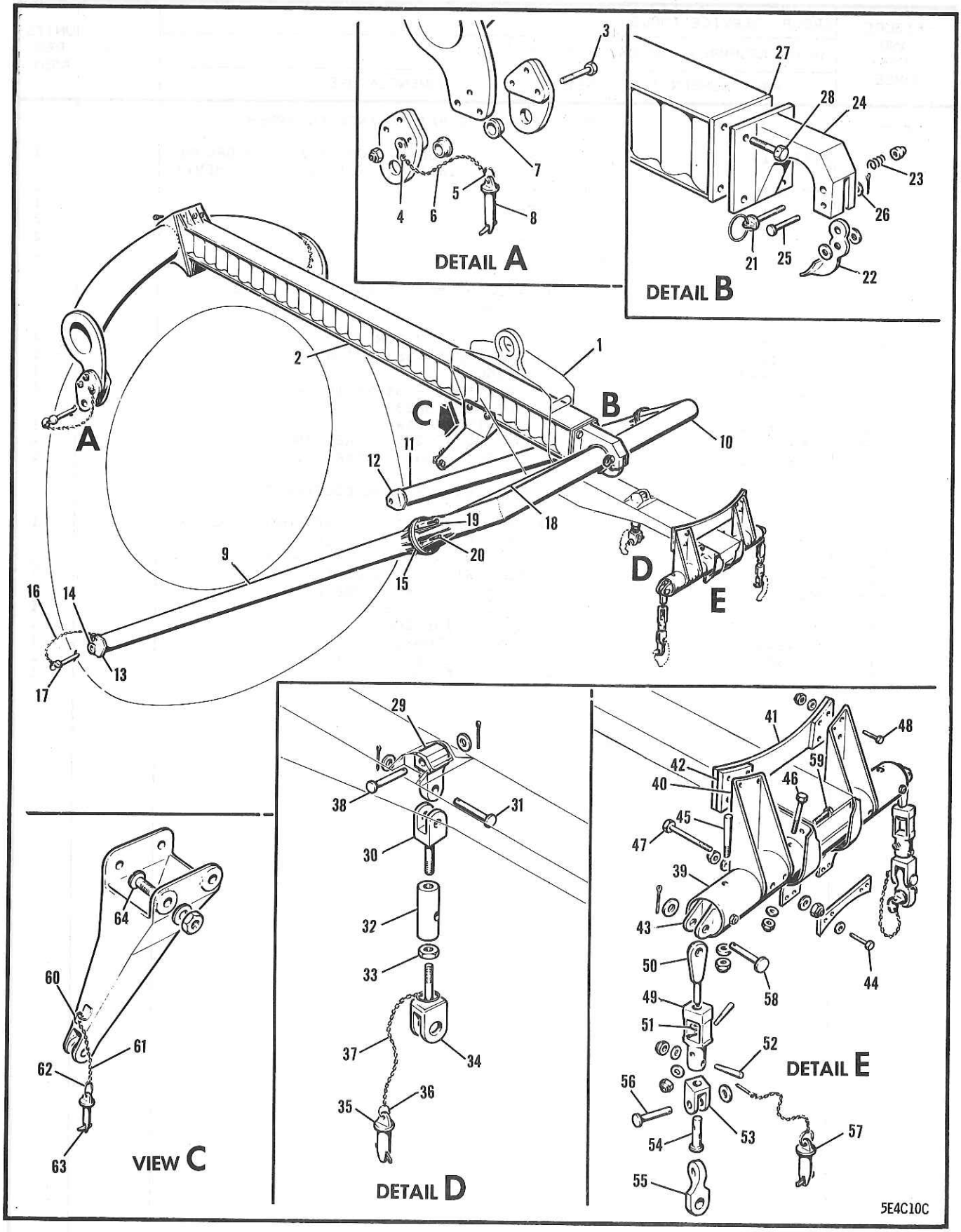

FIGURE 319 ENGINE GUIDE SLING

FIGURE AND INDEX NUMBER	GROUP SERVICE TOOLS MAJOR ASSEMBLY ENGINE GUIDE SLING PART NUMBER	1234567 NOMENCLATURE	CODE	UNITS PER ASSY
319 -	13A-60901	SLING ASSY - ENGINE GUIDE (FOR ORENDA 10 & 14 ENGINES)		1
- 1	13A-60911	•CARRIAGE ASSY - ENGINE SLING (SEE FIG. 320)		REF
- 2	13A-60833-1	•BEAM ASSY - ENGINE GUIDE SLING		1
	13A-60940	•CROSS-BEAM ASSY - ENGINE GUIDE SLING		1
	13A-60940-25	••LUG ASSY - CROSS-BEAM		2
	13A-60940-26	••LUG ASSY - CROSS-BEAM		2
- 3	AN5-17A	••BOLT -		6
	AN960-516	••WASHER -		4
	13A-60826	••WASHER - ENGINE GUIDE SLING		2
	13A-60940-30	••SHIM - ENGINE GUIDE SLING		2
- 4	13A-60940-14	••RING - ENGINE GUIDE SLING		2
- 5	13A-60940-12	••RING - ENGINE GUIDE SLING		2
- 6	COMMERCIAL	••CHAIN - BRASS 5-IN. LONG (13A-60940-16)		2
- 7	13A-60827	••BUSHING -		4
- 8	13A-60825	••PIN ASSY - ENGINE GUIDE SLING LOCATING		2
	AN345-516	••NUT -		6
	AN6-10A	•BOLT -		4
	AN365-624	•NUT -		4
	13A-60895	•SUPPORT ASSY - (ENGINE GUIDE SLING)		1
- 9	13A-60895-3	••SUPPORT ASSY -		1
-10	13A-60895-5	••SUPPORT ASSY -		1
-11	13A-60895-45	••SUPPORT ASSY -		1
	13A-60895-51	•••GUSSET - SUPPORT (ON -3 & -45)	A	1
	13A-60895-53	•••GUSSET - SUPPORT (ON -3 & -45)	B	1
-12	13A-60895-33	•••PLATE - (ON -3 & -45)		1
-13	13A-60895-35	•••PLATE - (ON -3 & -45)		1
-14	13A-60827	•••BUSHING - (ON -3 & -45)		2
-15	13A-60832-2	•••PLATE - FACE LH (ON -3 & -5)		1
	13A-60832-3	•••PLATE - FACE RH (ON -45 & -5)		1
-16	COMMERCIAL	•••CHAIN - BRASS 6-IN. LONG (13A-60895-47) (ON -3 & -45)		1
-17	13A-60825	•••PIN ASSY - ENGINE GUIDE SLING LOCATING (ON -3 & -45)		1
-18	13A-60831-2	•••FLANGE - LH (ON -5)		1
	13A-60831-3	•••FLANGE - RH (ON -5)		1
-19	AN4-7A	••BOLT -		16
	AN960-416	••WASHER -		32
	AN310-4	••NUT -		16
-20	AN386-2-10A	••PIN -		4
	AN975-3	••WASHER -		4
	AN364-1032	••NUT -		4
	13A-60941	•HOOK ASSY - (ENGINE GUIDE SLING)		1
-21	13A-60944	••PLUNGER ASSY - ENGINE GUIDE SLING		1
-22	13A-60943	••CATCH ASSY - ENGINE GUIDE SLING HOOK		1
-23	13A-60945	••SPRING - ENGINE GUIDE SLING COMPRESSION		1
-24	13A-60942	••HOOK - ATTACHING		1
-25	AN394-41	••PIN -		1
-26	AN960-416L	••WASHER -		3
	AN380-2-2	••COTTER-PIN -		1
-27	13A-60847	•PLATE - GUIDE SLING BEAM PACKING		1
-28	AN6H12A	•BOLT -		4
	13A-60950	•PICK-UP ASSY - ORENDA 14 REAR		1
-29	13A-60950-2	••EYE - REAR PICK-UP TOP		1
-30	13A-60950-4	••FORK - REAR PICK-UP		1
-31	AN394-19	••PIN -	A	1
	AN394-25	••PIN -	B	1
	AN380-2-2	••COTTER-PIN -		1
-32	13A-60950-6	••BARREL - REAR PICK-UP		1
-33	AN316-6	••NUT -		1
		A (EFFECTIVE SLING SERIAL NO. 1 TO 11 INCL)		
		B (EFFECTIVE SLING SERIAL NO. 12 & SUBS)		

FIGURE AND INDEX NUMBER	GROUP SERVICE TOOLS MAJOR ASSEMBLY ENGINE GUIDE SLING PART NUMBER	1234567 NOMENCLATURE	CODE	UNITS PER ASSY
319 -34	13A-60950-8	••FORK - REAR PICK-UP BOTTOM	A	1
	13A-60950-16	••FORK - REAR PICK-UP BOTTOM	B	1
-35	13A-60830	••PIN ASSY - LOCKING		1
-36	13A-60950-14	••RING - REAR PICK-UP		2
-37	COMMERCIAL	••CHAIN - BRASS 6-IN. LONG (13A-60950-12)		1
-38	AN396-51	•PIN -		1
	AN960-616	•WASHER -		1
	AN380-2-3	•COTTER-PIN -		1
	13A-60951	•CROSS-TUBE ASSY - ENGINE GUIDE SLING SABRE 5 (ORENDA 10)		1
-39	13A-60951-3	••CROSS-TUBE - ENGINE GUIDE SLING		1
-40	13A-60953-1	••SUPPORT ASSY - STEADY BAR LH		1
	13A-60953-2	••SUPPORT ASSY - STEADY BAR RH		1
-41	13A-60952	••BAR - STEADY		1
-42	13A-60951-5	••PACKING - ENGINE SLING CROSS-TUBE		2
-43	13A-60866	••PLUG END - ENGINE GUIDE SLING		2
	13A-60867	••PLATE ASSY - SUPPORT		1
	13A-60867-4	•••STUBBER - SUPPORT PLATE		1
-44	AN4-7A	•••BOLT -		4
	AN960-416	•••WASHER -		8
	AN365-428	•••NUT -		4
-45	AN386-1-17A	••PIN -		4
	13A-60870	••WASHER - SADDLE		4
	AN975-3	••WASHER -		4
	AN365-1032	••NUT -		4
-46	AN5-25	••BOLT -		2
	13A-60956	••WASHER - ENGINE GUIDE SLING SADDLE		4
	AN960-516	••WASHER -		2
	AN365-524	••NUT -		2
-47	AN5-25	••BOLT -		4
	AN960-516	••WASHER -		4
	AN365-524	••NUT -		4
-48	AN4-11A	••BOLT -		8
	AN960-10	••WASHER -		8
	AN365-1032	••NUT -		8
	13A-60868	••PICK-UP ASSY - ORENDA 10 ENGINE GUIDE SLING REAR		2
-49	13A-60955	•••BODY - ORENDA 10 ENGINE GUIDE SLING REAR PICK-UP		1
-50	13A-60862	•••EYE-END - ENGINE GUIDE SLING		1
-51	13A-60957	•••WASHER - ENGINE GUIDE SLING SPECIAL		1
	AN380-2-2	•••COTTER-PIN -		1
-52	AN386-1-8A	•••PIN -		2
	AN975-3	•••WASHER -		2
	AN365-1032	•••NUT -		2
-53	13A-60863	•••FORK-END - SWIVEL		1
-54	13A-60865	•••PIN - GUIDE SLING RETAINING		1
-55	13A-60864	•••FORK-END -		1
-56	AN398-31	•••PIN -		1
	AN960-816	•••WASHER -		1
	AN380-3-4	•••COTTER-PIN -		1
-57	13A-60830	•••PIN ASSY - LOCKING		1
-58	AN398-35	••PIN -		2
	AN960-416	••WASHER -		2
	AN380-3-4	••COTTER-PIN -		2
-59	AN4-6A	•BOLT -		4
	AN960-416	•WASHER -		4
	AN365-416	•NUT -		4
	13A-60805	•LEVER ASSY - ENG GUIDE SLING FWD SUPPORT (FOR ORENDA 10 & 14 ENGINES)		1
	A	(EFFECTIVE SLING SERIAL NO. 1 TO 11 INCL)		
	B	(EFFECTIVE SLING SERIAL NO. 12 & SUBS)		

FIGURE AND INDEX NUMBER	GROUP SERVICE TOOLS MAJOR ASSEMBLY ENGINE GUIDE SLING PART NUMBER	1234567 NOMENCLATURE	CODE	UNITS PER ASSY
319 -60	13A-60805-14	••RING - FWD SUPPORT LEVER		1
-61	COMMERCIAL	••CHAIN - BRASS 6-IN. LONG (13A-60805-16)		1
-62	13A-60805-12	••RING - FWD SUPPORT LEVER		1
-63	13A-60830	••PIN ASSY - LOCKING		1
	13A-60805-18	••BEARING - FLANGE (PRESS-FIT)	A	2
-64	13A-60901-3	•BOLT -		4
	AN960-816	•WASHER -		4
	AN316-8	•NUT -		4
		-000-		
	A	(EFFECTIVE SLING SERIAL NO. 1 TO 11 INCL)		

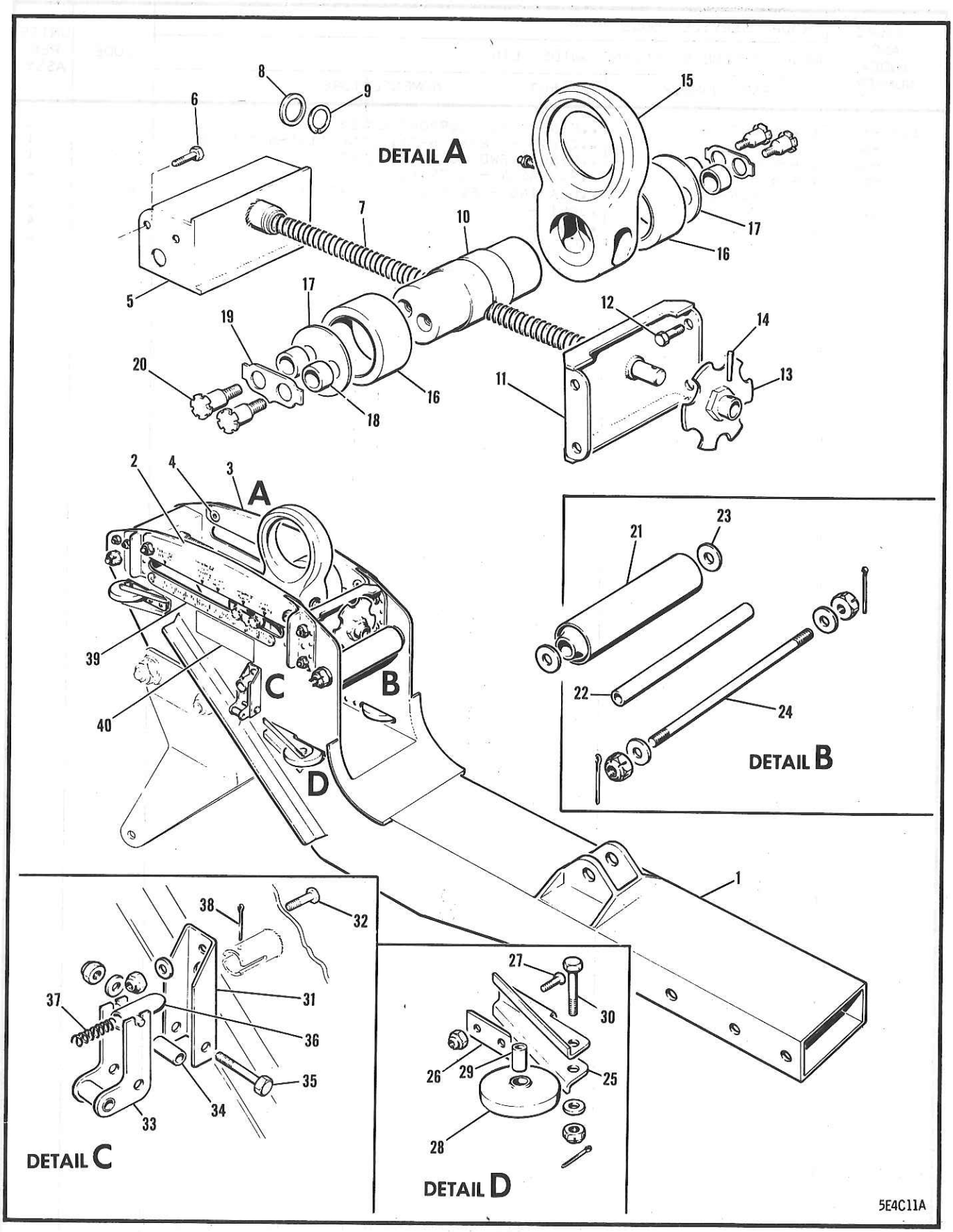

FIGURE 320 ENGINE SLING CARRIAGE

FIGURE AND INDEX NUMBER	GROUP SERVICE TOOLS MAJOR ASSEMBLY ENGINE SLING CARRIAGE PART NUMBER	1234567 NOMENCLATURE	CODE	UNITS PER ASSY
320 -	13A-60911	CARRIAGE ASSY - ENGINE SLING (SEE FIG. 319)		1
- 1	13A-60912	•CARRIAGE ASSY - ENGINE GUIDE SLING		1
- 2	13A-60919	•PLATE - ENGINE GUIDE SLING LH		1
- 3	13A-60919-1	•PLATE - ENGINE GUIDE SLING RH		1
- 4	NAS336A11	•BOLT -		4
	AN960-616	•WASHER -		4
	AN365-624	•NUT -		4
- 5	13A-60914	•BRACKET - ENGINE GUIDE SLING		1
- 6	AN4-5A	•BOLT -		4
	AN960-416	•WASHER -		4
	AN365-428	•NUT -		4
- 7	13A-60921	•SCREW - ENGINE GUIDE SLING LEAD		1
- 8	13A-60935	•WASHER -		1
- 9	NAS51-75	•RING -		1
-10	13A-60928	•PIN - ENGINE GUIDE SLING		1
-11	13A-60913	•BRACKET - ENGINE GUIDE SLING		1
-12	AN4-5A	•BOLT -		4
	AN960-416	•WASHER -		4
	AN364-428	•NUT -		4
-13	13A-60820	•HAND-WHEEL -		1
-14	AN386-1-8A	•PIN -		1
-15	13A-60920	•SLINGING EYE ASSY - ENGINE GUIDE SLING		1
	MS15001-1	••FITTING - LUBRICATION SURFACE CHECK		1
-16	13A-60927	•ROLLER - ENGINE GUIDE SLING		2
-17	13A-60925	•RETAINER - ENGINE GUIDE SLING		2
	B-2816	•NEEDLE-BEARING - DRAWN CUP (TOR)		2
		OR		
	B-2816-OH	•NEEDLE-BEARING - DRAWN CUP (TOR)		
-18	13A-60822	•ROLLER -		4
-19	13A-60923	•WASHER - ENGINE GUIDE SLING		1
-20	13A-60922	•BOLT - ENGINE GUIDE SLING SHOULDERED		4
-21	13A-60937	•ROLLER ASSY - ENGINE CARRIAGE		2
-22	13A-60916	•TUBE - SPACER		2
-23	13A-60918	•WASHER -		2
-24	13A-60917	•BOLT -		2
	AN960-816	•WASHER -		4
	AN310-8	•NUT -		4
	AN380-3-4	•COTTER-PIN -		4
-25	13A-60810	•BRACKET - ROLLER		4
-26	13A-60829	•WASHER - SPECIAL		4
-27	NAS221-10	•BOLT -		8
	AN365-428	•NUT -		8
-28	13A-60811	•ROLLER -		4
-29	A304-1	•BUSHING - (CHC) (OILITE)		4
-30	AN4-11	•BOLT -		4
	AN960-416	•WASHER -		4
	AN310-4	•NUT -		4
	AN380-2-3	•COTTER-PIN -		4
-31	13A-60929	•CHANNEL -		1
-32	AN3-4A	•BOLT -		2
	AN960-10	•WASHER -		2
	AN364-1032	•NUT -		2
-33	13A-60930	•LEVER ASSY - CARRIAGE		1
-34	13A-60933	•SPACER -		1
-35	AN4-13A	•BOLT -		1
	AN960-416	•WASHER -		1
	AN364-428	•NUT -		1
-36	13A-60931	•PLUNGER ASSY -		1
-37	13A-60932	•SPRING -		1

FIGURE AND INDEX NUMBER	GROUP SERVICE TOOLS MAJOR ASSEMBLY ENGINE SLING CARRIAGE PART NUMBER	1234567 NOMENCLATURE	CODE	UNITS PER ASSY
320 -38	AN380-2-4	•COTTER-PIN -		1
-39	13A-60934	•SCALE - CARRIAGE GUIDE SLING GRADUATED		1
-40	13A-60910	•DECALCOMANIA - ENGINE SLING CARRIAGE		2
		-000-		

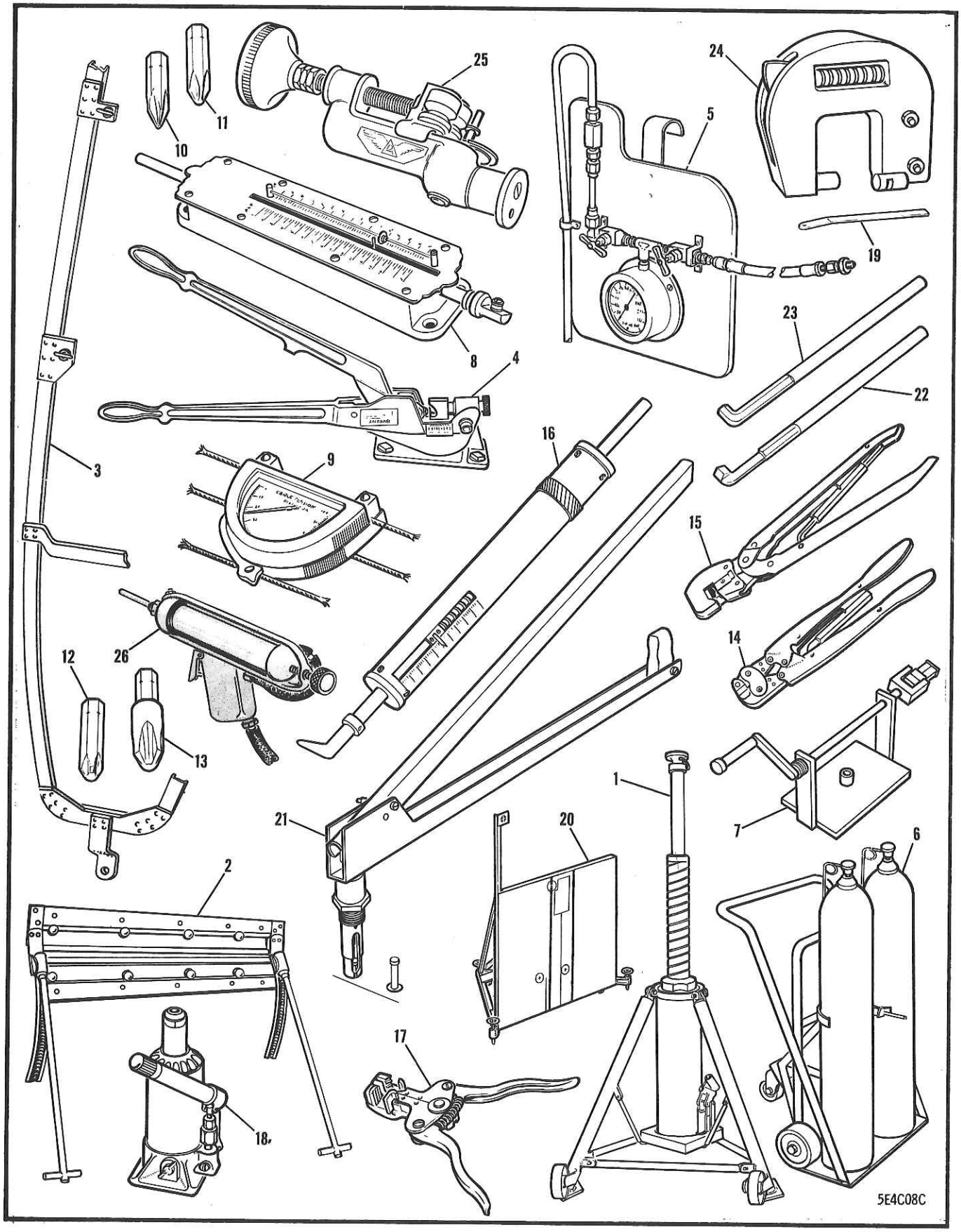

FIGURE 321 GENERAL PURPOSE EQUIPMENT

FIGURE AND INDEX NUMBER	GROUP SERVICE TOOLS MAJOR ASSEMBLY GENERAL PURPOSE EQUIPMENT PART NUMBER	1234567 NOMENCLATURE	CODE	UNITS PER ASSY
321 -		GENERAL PURPOSE MAINTENANCE & OVERHAUL EQUIPMENT		
- 1	AC1275	JACK - (MID) (AIRCRAFT JOYCE)		1
- 2	GT994424	CLAMP - TAIL-PIPE BLANKET		1
- 3	HF29785	GUARD - CANOPY SEAL		1
- 4	MY28	HYTOOL - TERMINAL & LINK INSTALLING (BEC)		1
- 5	PE2503-89H	PANEL - BRAKE BLEEDER		1
- 6	PE-2503-207H	RIG - OXYGEN FILLING		1
- 7	103-301	TAPERING TOOL - COAXIAL CABLE (APC) (MIL NO. MX103/U)		1
- 8	30-D	SCALE - 0-30 POUNDS (USED TO CHECK LATERAL STICK FORCES)		1
- 9	402-1B2	METER - (PSC) (CABLE TENSION)		1
-10	440-1	BIT - PHILLIPS NO. 1		1
-11	440-2	BIT - PHILLIPS NO. 2		1
-12	440-3	BIT - PHILLIPS NO. 3		1
-13	440-4	BIT - PHILLIPS NO. 4		1
-14	49556	PLIERS - (AMP) (HAND)		1
	49557	PLIERS - (AMP) (HAND)		1
-15	59062	PLIERS - (AMP) (HAND)		1
-16	719-10	SCALE - 0-10 POUNDS (TO CHECK BREAK-OUT FORCES) (REPLACES 702-2)		1
-17	733	STRIPPER - (SWM) (WIRE)		1
-18	8T3A	JACK - (MID) (JOYCE AXLE) (8-TON CAPACITY)		1
-19	HF22571-1	FEELER - ENGINE INSTL .050-IN.		1
	HF22571-2	FEELER - ENGINE INSTL .060-IN.		1
	HF22571-4	FEELER - ENGINE INSTL .090-IN.		1
-20	HF22380	TARGET - LANDING LIGHT ALIGNING		1
		GENERAL PURPOSE OVERHAUL EQUIPMENT		
-21	G-25	GUN & ADAPTER - CHERRY RIVET		1
-22	MST31035	KEY - EXTENSION ALLEN - 1/2		1
-23	MST31123	KEY - EXTENSION ALLEN - 3/8		1
-24	ZT1807	YOKE - TYPE C		1
-25	8	BEADER - (PAC) (HAND)		1
-26	986-0061	GUN - APPLICATOR (E.C. 801)		1
		-000-		

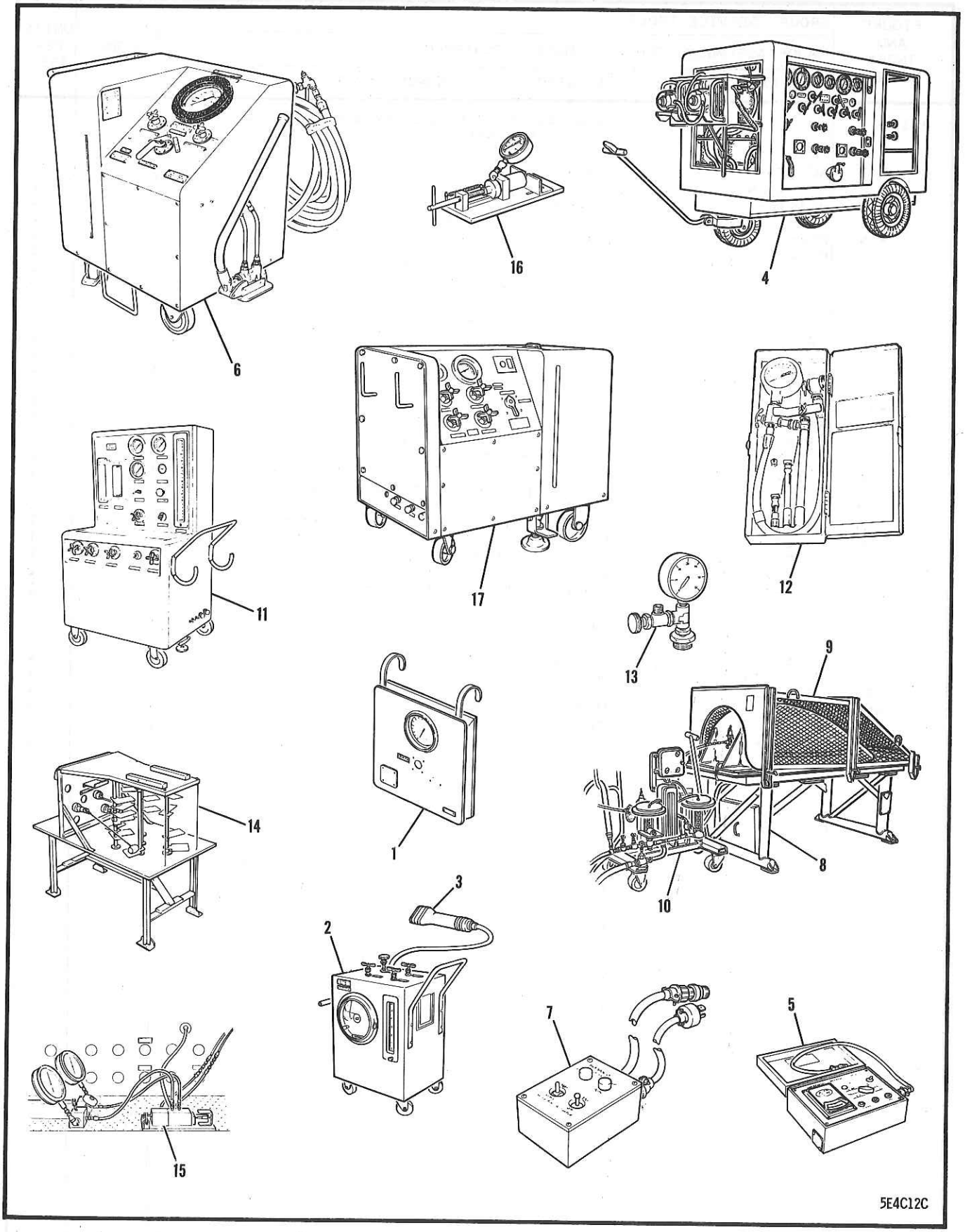

FIGURE 322 TEST EQUIPMENT

FIGURE AND INDEX NUMBER	GROUP SERVICE TOOLS MAJOR ASSEMBLY TEST EQUIPMENT PART NUMBER	1234567 NOMENCLATURE	CODE	UNITS PER ASSY
322 -		MAINTENANCE TEST EQUIPMENT		
- 1	PE-2503-211H	PANEL - ANTI-G SUIT (SUPES TF30771B & PE-2503-85H)		1
		MAINTENANCE & OVERHAUL TEST EQUIPMENT		
- 2	PE-2503-33H	STAND - FUEL CELL LEAK TEST		1
- 3	MST31100	CONNECTION - FUEL TEST STAND ADAPTER		1
- 4	MODEL PH-25-1-MX	TEST STAND - HYDRAULIC PORTABLE (GRR)		1
- 5	HF26267	TESTER - LIQUIDOMETER RESISTANCE		1
- 6	PE-2503-217H	STAND - HYDRAULIC STATIC TEST 5000 PSI		1
- 7	TF23304	CONTROL - WING FLAP MOVEMENT		1
	TF27488	TESTER - DROP TANK SHACKLE		1
	TF28996	FIXTURE ASSY - CANOPY CYCLING LEAK TEST		1
- 8	T243458	•STAND - PRESSURIZATION TEST FIXTURE		1
- 9	T256875	•CAGE - CANOPY CYCLING LEAK TEST SAFETY		1
-10	PE-2503-31M	•STAND - PILOT CANOPY PRESSURE & CYCLING TEST		1
-11	PE-2503-101H	•STAND - CANOPY OR COCKPIT PRESSURIZING AIR PRESSURE TEST		1
-12	4581	GAUGE KIT - (SCR) (H/PRESS TYPE 0-400-LB)		1
-13	MST31571	GAUGE & ADAPTER - HYDRAULIC RESERVOIR		1
		OVERHAUL TEST EQUIPMENT		
-14	HF29297	STAND - LIQUIDOMETER TEST		1
-15	TF23225	TEST FIXTURE - AILERON VALVE SPOOL & SLEEVE		1
-16	TF31941	TEST FIXTURE - BENDIX AUTO BRAKE ADJUSTING		1
-17	PE-2503-236H	STAND - POWER-DRIVEN HYDRAULIC		1
		-000-		

PART 4

BULK MATERIAL CHART

TABLE OF CONTENTS

TITLE	PAGE
AIR SYSTEM	1317
ANTI-G SYSTEM	1318
DE-ICING SYSTEM	1319
FUEL SYSTEM	1320
HEAT & VENT & PRESSURIZATION SYSTEM	1322
HYDRAULIC SYSTEM	1323
LANDING GEAR	1354
OIL SYSTEM	1355
OXYGEN SYSTEM	1356
PITOT STATIC SYSTEM	1357

CURRENT CANADAIR SPECIFICATION	CANADAIR OBSOLETE SPECIFICATION	COMMERCIAL DESIGNATION		
		AMERICAN		CANADIAN
MIL-T-6845	AN-T-86 AMS-5566	18-8 TYPE 304 COLD DRAWN		18-8 TYPE 304 COLD DRAWN
MIL-T-8504	AN-T-43 COMP 2 MIL-T-6846	18-8 TYPE 304 ANNEALED		18-8 TYPE 304 ANNEALED
MIL-T-8606 TYPE 1 OR TYPE 2	44-7-25 57-180-3, GR-LSS AN-T-43 COMP 2 AN-WW-T-858	18-8 TYPE 321 OR TYPE 347 STABILIZED		18-8 TYPE 321 OR TYPE 347 STABILIZED
		OLD	NEW	
WW-T-790	(WW-T-790 IS OBSOLETE IN USA)	53S-	6063	55S- (57S-OR 65S- MAY BE SUBSTITUTED)
WW-T-787	44-T-32 57-187-3A	52S-	5052	57S-
WW-T-789		61S-	6061	65S-
MIL-T-7081				
AMS-4080	AMS-4083			
WW-T-799		COPPER		COPPER

CHART 3 SPECIFICATIONS-COMMERCIAL DESIGNATIONS OF TUBING

5E4D01

ADVANCE REVISION

Serial #12 dated 24 Mar 61
(Sheet 1 of 1)

(This Advance Revision replaces Advance Revision Serial #4)

The sheet of this Advance Revision is to be inserted in the EO as follows:-

Sheet 1 facing page 1316

The following part numbers are listed as seals. When replacement becomes necessary, use bulk material as listed in Section 32R. In all instances, unit of issue is inches.

13A-32003-21	32R/19	151-31006-81	32R/23	172-31504-32	32R/10
13A-32003-33	32R/21	151-31006-85	32R/22	9E1	32R/30
13A-32003-45	32R/21	151-31006-87	32R/22	5W1-4-6-11	
13A-32003-51	32R/21	151-31006-89	32R/22	5W1-4-14-8	
13A-32003-55	32R/21	151-31007-65	32R/20	5W1-4-17-8	
13A-32003-61	32R/19	151-31007-71	32R/20	5W1-4-29-8	Use 26CJ/5W1-4
13A-32003-65	32R/19	151-31007-75	32R/20	5W1-4-30-8	
13A-32004-23	32R/17	151-31116-29	32R/7	5W1-4-50-8	
				5W1-4-50	
13A-32004-53	32R/19	151-31221-45	32R/21	5W1-6-1-8	
13A-32004-57	32R/19	151-31736-47	32R/11	5W1-6-3-8	Use 26CJ/5W1-6
13A-32004-61	32R/19	151-31737-23	32R/20	5W1-6-10-15	
13A-32004-65	32R/19	151-53030-7	32R/7	5W1-9-7-10	
13A-32004-69	32R/19	151-63015-19	32R/17	5W1-9-7-14	Use 26CJ/5W1-9
13A-32004-75	32R/19	170-31872-5	32R/2	5W1-9-29-4	
13A-32004-81	32R/19	172-31118-25	32R/10		

ISSUED ON AUTHORITY OF THE CHIEF OF THE AIR STAFF

PART NUMBER	SIZE, GAUGE, STRAIGHT LENGTH	MATERIAL SPEC.	FITTINGS			
			SLEEVE	QTY	NUT	QTY
		AIR SYSTEM				
170-61029-13	1/4 X .035 X 14	WW-T-787 57S-0 30B/695	AN819-4Z	2	AN818-4D	2
170-61029-25	1/4 X .035 X 34	WW-T-787 57S-0 30B/695	AN819-4Z	2	AN818-4D	2
170-61029-29	1/4 X .035 X 34	WW-T-29 57S-0 30B/695	AN819-4Z	2	AN818-4D	2
170-61029-31	1/4 X .035 X 52	WW-T-787 57S-0 30B/695	AN819-4Z	2	AN818-4D	2
170-61029-9	1/4 X .035 X 8-1/2	WW-T-787 57S-0 30B/695	AN819-4Z	2	AN818-4D	2
170-61029-951	1/4 X .035 X 22	WW-T-787 57S-0 30B/695	AN819-4Z	2	AN818-4D	2
170-61029-953	1/4 X .035 X 3	WW-T-787 57S-0 30B/695	AN819-4Z	2	AN818-4D	2
170-61029-955	1/4 X .035 X 9	WW-T-787 57S-0 30B/695	AN819-4Z	2	AN818-4D	2
170-61029-957	1/4 X .035 X 10	WW-T-787 57S-0 30B/695	AN819-4Z	2	AN818-4D	2
170-61029-959	1/4 X .035 X 36	WW-T-787 57S-0 30B/695	AN819-4Z	2	AN818-4D	2
170-61029-961	1/4 X .035 X 21	WW-T-787 57S-0 30B/695	AN819-4Z	2	AN818-4D	2
170-61029-963	1/4 X .035 X 46	WW-T-787 57S-0 30B/695	AN819-4Z	2	AN818-4D	2
170-61029-965	1/4 X .035 X 43	WW-T-787 57S-0 30B/695	AN819-4Z	2	AN818-4D	2
170-61029-971	1/4 X .035 X 16-1/2	WW-T-787 57S-0 30B/695	AN819-4Z	1	AN818-4D	1
170-61029-973	1/4 X .035 X 52	WW-T-787 57S-0 30B/695	AN819-4Z	2	AN818-4D	2
170-61029-975	1/4 X .035 X 37	WW-T-787 57S-0 30B/695	AN819-4Z	2	AN818-4D	2
170-61029-977	1/4 X .035 X 13	WW-T-787 57S-0 30B/695	AN819-4Z	2	AN818-4D	2
176-31809	1/4 X .049 X 5-5/32	MIL-T-6845 18-8 30B/1964	AN819-4	2	AN818-4	2

PART NUMBER	SIZE, GAUGE, STRAIGHT LENGTH	MATERIAL SPEC.	FITTINGS			
			SLEEVE	QTY	NUT	QTY
	ANTI-G SYSTEM					
161-51801-69	5/8 X .035 X 21-7/8	WW-T-787 57S-0 30B/981	AN819-10Z	2	AN818-10D	2
161-51801-957	1/4 X .035 X 23	WW-T-787 57S-0 30B/695	AN819-4Z	2	AN818-4D	2
161-51801-959	5/8 X .035 X	WW-T-787 57S-0 30B/981				
170-51801-23	5/8 X .035 X 12-3/8	WW-T-787 57S-0 30B/981	AN819-10Z	1	AN818-10D	1
170-51801-977	5/8 X .035 X 48	WW-T-787 57S-0 30B/981	AN819-10Z	2	AN818-10D	2
170-51801-979	5/8 X .035 X 48	WW-T-787 57S-0 30B/981	AN819-10Z	2	AN818-10D	2
170-51801-981	5/8 X .035 X 3	WW-T-787 57S-0 30B/981	AN819-10Z	2	AN818-10D	2
170-51801-985	5/8 X .035 X 10	WW-T-787 57S-0 30B/981	AN819-10Z	1	AN818-10D	1

PART NUMBER	SIZE, GAUGE, STRAIGHT LENGTH	MATERIAL SPEC.	FITTINGS			
			SLEEVE	QTY	NUT	QTY
	DE-ICING SYSTEM					
13A-64023-10	1/4 X .035 X 7	WW-T-789 65S-T6 30B/1979	AN819-4Z	2	AN818-4D	2
13A-64023-12	1/4 X .035 X 21	WW-T-789 65S-T6 30B/1979	AN819-4Z	2	AN818-4D	2
13A-64023-14	3/8 X .035 X 30	WW-T-789 65S-T6 30B/1981	AN819-6Z	2	AN818-6D	2
13A-64023-16	1/2 X .035 X 9	WW-T-789 65S-T6 30B/1982	AN819-8Z	2	AN818-8D	2
13A-64023-18	1/4 X .035 X 15-3/8	WW-T-789 65S-T6 30B/1979	AN819-4Z	2	AN818-4D	2
13A-64023-2	3/8 X .035 X 18	WW-T-789 65S-T6 30B/1981	AN819-6Z	2	AN818-6D	2
13A-64023-20	1/4 X .035 X 15-1/2	WW-T-789 65S-T6 30B/1979	AN819-4Z	2	AN818-4D	2
13A-64023-22	1/4 X .035 X 14	WW-T-789 65S-T6 30B/1979	AN819-4Z	2	AN818-4D	2
13A-64023-4	1/4 X .035 X 13-1/2	WW-T-789 65S-T6 30B/1979	AN819-4Z	2	AN818-4D	2
13A-64023-6	1/4 X .035 X 21	WW-T-789 65S-T6 30B/1979	AN819-4Z	2	AN818-4D	2
13A-64023-8	1/4 X .035 X 7	WW-T-789 65S-T6 30B/1979	AN819-4Z	2	AN818-4D	2
191-53355-55	5/8 X .035 X 20	WW-T-787 57S-0 30B/981	AN819-10Z	2	AN818-10D	2

PART NUMBER	SIZE, GAUGE, STRAIGHT LENGTH	MATERIAL SPEC.	FITTINGS			
			SLEEVE	QTY	NUT	QTY
		FUEL SYSTEM				
13A-64023-18	1/4 X .035 X 15-3/8	WW-T-789 65S 30B/1979	AN819-4Z	1	AN818-4D	1
13A-64023-24	1/4 X .035 X 10	WW-T-789 65S 30B/1979	AN819-4Z	1	AN818-4D	1
13A-64028-9	1/4 X .035 X 30-5/8	WW-T-787 57S-0 30B/695	AN819-16Z	1	AN818-16Z	1
13A-64091-147	3/8 X .035 X 8-7/8	WW-T-787 57S-0 30B/551				
13A-64091-148	3/8 X .035 X 8-7/8	WW-T-787 57S-0 30B/551				
13A-64091-149	3/8 X .035 X 13-3/4	WW-T-787 57S-0 30B/551				
13A-64091-150	3/8 X .035 X 13-3/4	WW-T-787 57S-0 30B/551				
13B-64015	3/8 X .035 X 8-3/8	WW-T-787 57S-0 30B/551				
161-48298-19	1/2 X .035 X 41	WW-T-787 57S-0 30B/975	AN819-8Z	1	AN818-8D	1
161-48298-950	1/2 X .035 X 41	WW-T-787 57S-0 30B/975	AN819-8Z	1	AN818-8D	1
172-48814-23	3/8 X .035 X 48-3/16	WW-T-787 57S-0 30B/551	AN819-6Z	1	AN818-6D	1
172-48814-41	3/8 X .035 X 4-15/16	WW-T-787 57S-0 30B/551	AN819-6Z	1	AN818-6D	1
172-48814-57	1/4 X .035 X 21-3/16	WW-T-787 57S-0 30B/695				
172-48814-58	1/4 X .035 X 21-1/4	WW-T-787 57S-0 30B/695				
172-48814-72	3/8 X .035 X 11-1/4	WW-T-787 57S-0 30B/551				
172-48814-73	3/8 X .035 X 11-1/4	WW-T-787 57S-0 30B/551				
172-48814-963	3/8 X .035 X 48	WW-T-787 57S-0 30B/551	AN819-6Z	1	AN818-6D	1
172-48814-965	3/8 X .035 X 60	WW-T-787 57S-0 30B/551	AN819-6Z	1	AN818-6D	1
172-48814-967	3/8 X .035 X 60	WW-T-787 57S-0 30B/551	AN819-6Z	1	AN818-6Z	1

PART NUMBER	SIZE, GAUGE, STRAIGHT LENGTH	MATERIAL SPEC.	FITTINGS			
			SLEEVE	QTY	NUT	QTY
		FUEL SYSTEM (CONTINUED)				
172-48831-10	3/8 X .035 X 31-1/2	WW-T-789 65S-T6 30B/1981	AN819-6Z	2	AN818-6D	2
172-48831-130	1/4 X .035 X 12-7/16	WW-T-787 57S-0 30B/695				
172-48831-131	1/4 X .035 X 22-7/8	WW-T-787 57S-0 30B/695				
172-48831-3	3/8 X .035 X 5-1/4	WW-T-789 65S-T6 30B/1981	AN819-6Z	2	AN818-6D	2
172-48831-31	3/4 X .035 X 9-1/16	WW-T-787 57S-0 30B/984	AN819-12Z	2	AN818-12D	2
172-48831-4	3/8 X .035 X 21	WW-T-789 65S-T6 30B/1981	AN819-6Z	2	AN818-6D	2
172-48831-5	3/8 X .035 X 11-1/8	WW-T-789 65S-T6 30B/1981	AN819-6Z	2	AN818-6D	2
172-48831-7	3/8 X .035 X 4	WW-T-789 65S-T6 30B/1981	AN819-6Z	2	AN818-6D	2
172-48831-8	3/8 X .035 X 29-1/2	WW-T-789 65S-T6 30B/1981	AN819-6Z	2	AN818-6D	2
172-48831-85	3/8 X .028 X 10-1/8	MIL-T-6845 18-8 30B/1977	AN819-6	2	AN818-6D	2
172-48831-86	3/8 X .028 X 10-1/2	MIL-T-6845 18-8 30B/1977	AN819-6	2	AN818-6D	2
172-48831-9	3/8 X .035 X 24-5/8	WW-T-789 65S-T6 30B/1981	AN819-6Z	2	AN818-6D	2
172-48861	3/4 X .049 X 9	WW-T-787 57S-0 30B/983	AN819-10Z AN819-12Z	1 1	AN818-10D AN818-12D	1 1

PART NUMBER	SIZE, GAUGE, STRAIGHT LENGTH	MATERIAL SPEC.	FITTINGS			
			SLEEVE	QTY	NUT	QTY
	HEAT & VENT & PRESSURIZATION SYSTEM					
151-53335-954	1/4 X .035 X	WW-T-787 57S-0 30B/695	AN819-4Z	2	AN818-4D	2
151-53517	1/4 X .035 X 4-1/2	WW-T-787 57S-0 30B/695	AN819-4Z	1	AN818-4D	1
151-53635-137	1/4 X .035 X 15	WW-T-787 57S-0 30B/695	AN819-4Z	2	AN818-4D	2
170-53335-952	1/4 X .035 X 18-3/8	WW-T-787 57S-0 30B/695	AN819-4Z	2	AN818-4D	2
172-53311-11	1/4 X .035 X 15-1/8	WW-T-787 57S-0 30B/695	AN819-4Z	2	AN818-4D	2
172-53311-15	1/4 X .035 X 12-3/8	WW-T-787 57S-0 30B/695	AN819-4Z	2	AN818-4D	2
172-53311-53	1/4 X .035 X 18	WW-T-787 57S-0 30B/695	AN819-4Z	2	AN818-4D	2
172-53311-7	1/4 X .035 X 26-3/4	WW-T-787 57S-0 30B/695	AN819-4Z	2	AN818-4D	2
172-53311-955	1/4 X .035 X	WW-T-787 57S-0 30B/695	AN819-4Z	2	AN818-4D	2

PART NUMBER	SIZE, GAUGE, STRAIGHT LENGTH	MATERIAL SPEC.	FITTINGS			
			SLEEVE	QTY	NUT	QTY
		HYDRAULIC SYSTEM				
13A-71810-11	1/2 X .065 X 40	AMS-4083 65S-T6 30B/2033	AN819-8Z	2	AN818-8D	2
13A-71810-13	1/2 X .065 X 19	AMS-4083 65S-T6 30B/2033	AN819-8Z	2	AN818-8D	2
13A-71810-15	1/4 X .020 X 8	MIL-T-6845 18-8 30B/1961	AN819-4	2	AN818-4	2
13A-71810-17	1/4 X .020 X 7	MIL-T-6845 18-8 30B/1961	AN819-4	2	AN818-4	2
13A-71810-19	1/4 X .035 X 10	AMS-4083 65S-T6 30B/1979	AN819-4Z	2	AN818-4D	2
13A-71810-25	1/4 X .035 X 12	WW-T-787 57S-0 30B/695	AN819-4Z	2	AN818-4D	2
13A-71810-27	1/2 X .065 X 41	AMS-4083 65S-T6 30B/1982	AN819-8Z	2	AN818-8D	2
13A-71810-29	1/2 X .065 X 43	AMS-4083 65S-T6 30B/2033	AN819-8Z	2	AN818-8D	2
13A-71810-3	1/2 X .035 X 5	MIL-T-6845 18-8 30B/1969	AN819-8	2	AN818-8	2
13A-71810-31	1/2 X .035 X 22	MIL-T-6845 18-8 30B/1969	AN819-8	2	AN818-8	2
13A-71810-33	1/2 X .065 X 19	AMS-4083 65S-T6 30B/2033	AN819-8Z	2	AN818-8D	2
13A-71810-35	1/2 X .065 X 5	AMS-4083 65S-T6 30B/2033	AN819-8Z	2	AN818-8D	2
13A-71810-37	3/8 X .049 X 12	AMS-4083 65S-T6 30B/1983	AN819-6Z	2	AN818-6D	2
13A-71810-39	1/4 X .035 X 8	AMS-4083 65S-T6 . 30B/1979	AN819-4Z	2	AN818-4D	2
13A-71810-41	1/4 X .035 X 7	AMS-4083 65S-T6 30B/1979	AN819-4Z	2	AN818-4D	2
13A-71810-43	1/2 X .065 X 32	AMS-4083 65S-T6 30B/2033	AN819-8Z	2	AN818-8D	2
13A-71810-45	1/4 X .035 X 25-1/8	AMS-4083 65S-T6 30B/1979	AN819-4Z	2	AN818-4D	2
13A-71810-5	3/8 X .028 X 12	MIL-T-6845 18-8 30B/1977	AN819-6	2	AN818-6	2
13A-71810-7	1/2 X .035 X 37	MIL-T-6845 18-8 30B/1969	AN819-8	2	AN818-8	2
13A-71810-9	1/2 X .035 X 22	MIL-T-6845 18-8 30B/1969	AN819-8	2	AN818-8	2

PART NUMBER	SIZE, GAUGE, STRAIGHT LENGTH	MATERIAL SPEC.	FITTINGS			
			SLEEVE	QTY	NUT	QTY
	HYDRAULIC SYSTEM (CONTINUED)					
13A-71811-11	1/2 X .049 X 13	AMS-4083 65S-T6 30B/1984	AN819-8Z	2	AN818-8D	2
13A-71811-13	1/2 X .049 X 13	AMS-4083 65S-T6 30B/1984	AN819-8Z	2	AN818-8D	2
13A-71811-3	1/2 X .049 X 5	AMS-4083 65S-T6 30B/1984	AN819-8Z	2	AN818-8D	2
13A-71811-5	1/2 X .049 X 7	AMS-4083 65S-T6 30B/1984	AN819-8Z	2	AN818-8D	2
13A-71811-7	1/4 X .020 X 36	MIL-T-6845 18-8 30B/1961	AN819-4	2	AN818-4	2
13A-71811-9	1/4 X .035 X 36	AMS-4083 65S-T6 30B/1979	AN819-4Z	2	AN818-4D	2
13A-71812-1005	3/8 X .028 X 14	MIL-T-6845 18-8 30B/1977	AN819-6	2	AN819-6	2
13A-71812-1007	3/8 X .028 X 9	MIL-T-6845 18-8 30B/1977	AN819-6	2	AN818-6	2
13A-71812-1009	3/8 X .028 X 27	MIL-T-6845 18-8 30B/1977	AN819-6	2	AN818-6	2
13A-71812-1015	3/8 X .028 X 46	MIL-T-6845 18-8 30B/1977	AN819-6	2	AN818-6	2
13A-71812-1017	3/8 X .028 X 29	MIL-T-6845 18-8 30B/1977	AN819-6	2	AN818-6	2
13A-71812-1019	3/8 X .028 X 28	MIL-T-6845 18-8 30B/1977	AN819-6	2	AN818-6	2
13A-71812-1021	3/8 X .028 X 21	MIL-T-6845 18-8 30B/1977	AN819-6	2	AN818-6	2
13A-71812-1023	3/8 X .028 X 40	MIL-T-6845 18-8 30B/1977	AN819-6	2	AN818-6	2
13A-71812-1025	3/8 X .028 X 27	MIL-T-6845 18-8 30B/1977	AN819-6	2	AN818-6	2
13A-71812-1027	3/8 X .028 X 47	MIL-T-6845 18-8 30B/1977	AN819-6	2	AN818-6	2
13A-71812-1029	3/8 X .028 X 46	MIL-T-6845 18-8 30B/1977	AN819-6	2	AN818-6	2
13A-71812-11	3/8 X .028 X 27	MIL-T-6845 18-8 30B/1977	AN819-6	2	AN818-6	2
13A-71812-13	3/8 X .028 X 47	MIL-T-6845 18-8 30B/1977	AN819-6	2	AN818-6	2
13A-71812-15	3/8 X .049 X 46	AMS-4083 65S-T6 30B/1983	AN819-6Z	2	AN818-6D	2

PART NUMBER	SIZE, GAUGE, STRAIGHT LENGTH	MATERIAL SPEC.	FITTINGS			
			SLEEVE	QTY	NUT	QTY
	HYDRAULIC SYSTEM (CONTINUED)					
13A-71812-17	3/8 X .049 X 29	AMS-4083 65S-T6 30B/1983	AN819-6Z	2	AN818-6D	2
13A-71812-19	3/8 X .049 X 28	AMS-4083 65S-T6 30B/1983	AN819-6Z	2	AN818-6D	2
13A-71812-21	3/8 X .049 X 21	AMS-4083 65S-T6 30B/1983	AN819-6Z	2	AN818-6D	2
13A-71812-23	3/8 X .049 X 40	AMS-4083 65S-T6 30B/1983	AN819-6Z	2	AN818-6D	2
13A-71812-25	3/8 X .049 X 27	AMS-4083 65S-T6 30B/1983	AN819-6Z	2	AN818-6D	2
13A-71812-27	3/8 X .049 X 47	AMS-4083 65S-T6 30B/1983	AN819-6Z	2	AN818-6D	2
13A-71812-29	3/8 X .049 X 42-1/2	AMS-4083 65S-T6 30B/1983	AN819-6Z	2	AN818-6D	2
13A-71812-31	1/4 X .035 X 15	AMS-4083 65S-T6 30B/1979	AN819-4Z	2	AN818-4D	2
13A-71812-5	3/8 X .049 X 14	AMS-4083 65S-T6 30B/1983	AN819-6Z	2	AN818-6D	2
13A-71812-7	3/8 X .049 X 9	AMS-4083 65S-T6 30B/1983	AN819-6Z	2	AN818-6D	2
13A-71812-9	3/8 X .049 X 27	AMS-4083 65S-T6 30B/1983	AN819-6Z	2	AN818-6D	2
13A-71814-1049	3/8 X .028 X 54	MIL-T-6845 18-8 30B/1977	AN819-6	2	AN818-6	2
13A-71814-1051	3/8 X .028 X 46	MIL-T-6845 18-8 30B/1977	AN819-6	2	AN818-6	2
13A-71814-1053	3/8 X .028 X 68	MIL-T-6845 18-8 30B/1977	AN819-6	2	AN818-6	2
13A-71814-1059	3/8 X .028 X 53	MIL-T-6845 18-8 30B/1977	AN819-6	2	AN818-6	2
13A-71814-1061	3/8 X .028 X 7	MIL-T-6845 18-8 30B/1977	AN819-6	1	AN818-6	1
13A-71814-1063	3/8 X .028 X 22	MIL-T-6845 18-8 30B/1977	AN819-6	2	AN818-6	2
13A-71814-1065.	3/8 X .028 X 18	MIL-T-6845 18-8 30B/1977	AN819-6	2	AN818-6	2
13A-71814-1067	3/8 X .028 X 21	MIL-T-6845 18-8 30B/1977	AN819-6	2	AN818-6	2
13A-71814-1071	3/8 X .028 X 26	MIL-T-6845 18-8 30B/1977	AN819-6	2	AN818-6	2

PART NUMBER	SIZE, GAUGE, STRAIGHT LENGTH	MATERIAL SPEC.	FITTINGS			
			SLEEVE	QTY	NUT	QTY
	HYDRAULIC SYSTEM (CONTINUED)					
13A-71814-1073	3/8 X .028 X 20	MIL-T-6845 18-8 30B/1977	AN819-6	2	AN818-6	2
13A-71814-1075	3/8 X .028 X 32	MIL-T-6845 18-8 30B/1977	AN819-6	2	AN818-6	2
13A-71814-1077	3/8 X .028 X 22	MIL-T-6845 18-8 30B/1977	AN819-6	2	AN818-6	2
13A-71814-1079	3/8 X .028 X 15	MIL-T-6845 18-8 30B/1977	AN819-6	2	AN818-6	2
13A-71814-11	3/8 X .028 X 45	MIL-T-6845 18-8 30B/1977	AN819-6	2	AN818-6	2
13A-71814-13	3/8 X .028 X 45	MIL-T-6845 18-8 30B/1977	AN819-6	2	AN818-6	2
13A-71814-15	3/8 X .028 X 52	MIL-T-6845 18-8 30B/1977	AN819-6	2	AN818-6	2
13A-71814-21	1/2 X .035 X 56	MIL-T-6845 18-8 30B/1969	AN819-8	2	AN818-8	2
13A-71814-23	1/2 X .035 X 14	MIL-T-6845 18-8 30B/1969	AN819-8	1	AN818-8	1
13A-71814-25	3/8 X .028 X 50	MIL-T-6845 18-8 30B/1977	AN819-6	2	AN818-6	2
13A-71814-27	3/8 X .028 X 14	MIL-T-6845 18-8 30B/1977	AN819-6	1	AN818-6	1
13A-71814-29	3/8 X .028 X 2	MIL-T-6845 18-8 30B/1977	AN819-6	1	AN818-6	1
13A-71814-3	3/8 X .028 X 100	MIL-T-6845 18-8 30B/1977	AN819-6	3	AN818-6	3
13A-71814-31	3/8 X .028 X 53	MIL-T-6845 18-8 30B/1977	AN819-6	2	AN818-6	2
13A-71814-33	1/4 X .020 X 12	MIL-T-6845 18-8 30B/1961	AN819-4	1	AN818-4	1
13A-71814-35	3/8 X .028 X 4	MIL-T-6845 18-8 30B/1977	AN819-6	1	AN818-6	1
13A-71814-39	3/8 X .028 X 28	MIL-T-6845 18-8 30B/1977	AN819-6	2	AN818-6	2
13A-71814-41	1/4 X .020 X 6	MIL-T-6845 18-8 30B/1961	AN819-4	2	AN818-4	2
13A-71814-43	3/8 X .028 X 31	MIL-T-6845 18-8 30B/1977	AN819-6	2	AN818-6	2
13A-71814-45	1/4 X .020 X 9	MIL-T-6845 18-8 30B/1961	AN819-4	2	AN818-4	2

PART NUMBER	SIZE, GAUGE, STRAIGHT LENGTH	MATERIAL SPEC.	FITTINGS			
			SLEEVE	QTY	NUT	QTY
	HYDRAULIC SYSTEM (CONTINUED)					
13A-71814-47	3/8 X .035 X 103	AMS-4083 65S 30B/1981	AN819-6Z	1	AN818-6D	1
13A-71814-49	3/8 X .035 X 54	AMS-4083 65S 30B/1981	AN819-6Z	2	AN818-6D	2
13A-71814-5	3/8 X .028 X 47	MIL-T-6845 18-8 30B/1977	AN819-6	2	AN818-6	2
13A-71814-51	3/8 X .035 X 46	AMS-4083 65S 30B/1981	AN819-6Z	2	AN818-6D	2
13A-71814-53	3/8 X .035 X 68	AMS-4083 65S 30B/1981	AN819-6Z	2	AN818-6D	2
13A-71814-57	3/8 X .035 X 48	AMS-4083 65S 30B/1981	AN819-6Z	2	AN818-6D	2
13A-71814-59	3/8 X .035 X 53	AMS-4083 65S 30B/1981	AN819-6Z	2	AN818-6D	2
13A-71814-61	3/8 X .035 X 7	AMS-4083 65S 30B/1981	AN819-6Z	1	AN818-6D	1
13A-71814-63	3/8 X .035 X 22	AMS-4083 65S 30B/1981	AN819-6Z	2	AN818-6D	2
13A-71814-65	3/8 X .035 X 18	AMS-4083 65S 30B/1981	AN819-6Z	2	AN818-6D	2
13A-71814-67	3/8 X .035 X 21	AMS-4083 65S 30B/1981	AN819-6Z	2	AN818-6D	2
13A-71814-69	3/8 X .035 X	AMS-4083 65S 30B/1981	AN819-6Z	3	AN818-6D	3
13A-71814-7	3/8 X .028 X 100	MIL-T-6845 18-8 30B/1977	AN819-6	3	AN818-6	3
13A-71814-71	3/8 X .035 X 26	AMS-4083 65S 30B/1981	AN819-6Z	2	AN818-6D	2
13A-71814-73	3/8 X .035 X 20	AMS-4083 65S 30B/1981	AN819-6Z	2	AN818-6D	2
13A-71814-75	3/8 X .035 X 32	AMS-4083 65S 30B/1981	AN819-6Z	2	AN818-6D	2
13A-71814-77	3/8 X .035 X 22	AMS-4083 65S 30B/1981	AN819-6Z	2	AN818-6D	2
13A-71814-79	3/8 X .035 X 15	AMS-4083 65S 30B/1981	AN819-6	2	AN818-6	2
13A-71814-81	3/8 X .028 X 23	MIL-T-6845 18-8 30B/1977	AN819-6	2	AN818-6	2
13A-71814-83	3/16 X .035 X 16	AMS-4083 65S 30B/1981	AN819-3Z	2	AN818-3D	2

PART NUMBER	SIZE, GAUGE, STRAIGHT LENGTH	MATERIAL SPEC.	FITTINGS			
			SLEEVE	QTY	NUT	QTY
	HYDRAULIC SYSTEM (CONTINUED)					
13A-71814-9	3/8 X .028 X 50	MIL-T-6845 18-8 30B/1977	AN819-6	2	AN818-6	2
13A-71820-11	3/8 X .049 X 25	AMS-4083 65S-T6 30B/1983	AN819-6Z	2	AN818-6D	2
13A-71820-13	1/4 X .020 X 63	MIL-T-6845 18-8 30B/1961	AN819-4	2	AN818-4	2
13A-71820-15	1/4 X .035 X 26	AMS-4083 65S-T6 30B/1979	AN819-4Z	2	AN818-4D	2
13A-71820-17	3/8 X .049 X 4	AMS-4083 65S-T6 30B/1983	AN819-6Z	2	AN818-6D	2
13A-71820-19	3/8 X .049 X 10	AMS-4083 65S-T6 30B/1983	AN819-6Z	2	AN818-6D	2
13A-71820-21	1/4 X .035 X 24	AMS-4083 65S-T6 30B/1979	AN819-4Z	2	AN818-4D	2
13A-71820-23	1/4 X .035 X 13	AMS-4083 65S-T6 30B/1979	AN819-4Z	2	AN818-4D	2
13A-71820-25	3/8 X .049 X 27	AMS-4083 65S-T6 30B/1983	AN819-6Z	2	AN818-6D	2
13A-71820-27	3/8 X .049 X 27	AMS-4083 65S-T6 30B/1983	AN819-6Z	2	AN818-6D	2
13A-71820-29	1/4 X .020 X 35	MIL-T-6845 18-8 30B/1961	AN819-4	2	AN818-4	2
13A-71820-3	3/4 X .049 X 19	AMS-4083 65S-T6 30B/1986	AN819-12Z	2	AN819-12D	2
13A-71820-31	1/4 X .020 X 12	MIL-T-6845 18-8 30B/1961	AN819-8	2	AN818-8	2
13A-71820-33	1/4 X .020 X 14	AMS-4083 65S-T6 30B/2031	AN819-4Z	2	AN818-4D	2
13A-71820-35	3/8 X .035 X 20	AMS-4083 65S-T6 30B/1981	AN819-6Z	2	AN818-6D	2
13A-71820-37	3/8 X .049 X 9-1/2	AMS-4083 65S-T6 30B/1983	AN819-6Z	2	AN818-6D	2
13A-71820-39	1/4 X .035 X 6-3/4	AMS-4083 65S-T6 30B/1979	AN819-4Z	2	AN818-4D	2
13A-71820-41	3/8 X .035 X 26	AMS-4083 65S-T6 30B/1981	AN819-6Z	2	AN818-6D	2
13A-71820-43	3/8 X .035 X 16	AMS-4083 65S-T6 30B/1981	AN819-6Z	2	AN818-6D	2
13A-71820-49	1/4 X .035 X 10	AMS-4083 65S-T6 30B/1979	AN819-4Z	2	AN818-4D	2

WSB

EO 05-5E-4
16 Jan 59

ROYAL CANADIAN AIR FORCE

ADVANCE REVISION

Serial #13 dated 24 Mar 61
(Sheet 1 of 2)

(This Advance Revision replaces Advance Revision Serial #5)

The sheets of this Advance Revision are to be inserted in the EO as follows:-

Sheet 1 facing page 1329
Sheet 2 facing page 1330

Size, gauge, straight length of the following Parts are to read as follows:-

13A-71821-31	1/4" x .020" x 8-1/2"
13A-71821-33	1/4" x .035" x 3-1/4"
13A-71821-35	1/4" x .020" x 5-1/2"

ISSUED ON AUTHORITY OF THE CHIEF OF THE AIR STAFF

PART NUMBER	SIZE, GAUGE, STRAIGHT LENGTH	MATERIAL SPEC.	FITTINGS			
			SLEEVE	QTY	NUT	QTY
	HYDRAULIC SYSTEM (CONTINUED)					
13A-71820-5	1/2 X .065 X 12	AMS-4083 65S-T6 30B/2033	AN819-8Z	2	AN818-8D	2
13A-71820-51	3/8 X .049 X TBD	AMS-4083 65S-T6 30B/1983	AN819-6Z	2	AN818-6D	2
13A-71820-53	1/2 X .065 X 10	AMS-4083 65S-T6 30B/2033	AN819-8Z	2	AN818-8D	2
13A-71820-7	1/2 X .049 X 8	AMS-4083 65S-T6 30B/1984	AN819-8Z	2	AN818-8D	2
13A-71820-9	1/2 X .049 X 13	AMS-4083 65S-T6 30B/1984	AN819-8Z	2	AN818-8D	2
13A-71821-1007	3/8 X .028 X 31	MIL-T-6845 18-8 30B/1977	AN819-6	2	AN818-6	2
13A-71821-1009	3/8 X .028 X 35	MIL-T-6845 18-8 30B/1977	AN819-6	2	AN818-6	2
13A-71821-1011	3/8 X .028 X 16	MIL-T-6845 18-8 30B/1977	AN819-6	2	AN818-6	2
13A-71821-11	3/8 X .049 X 16	AMS-4083 65S-T6 30B/1983	AN819-6Z	2	AN818-6D	2
13A-71821-13	3/8 X .049 X 49	AMS-4083 65S-T6 30B/1983	AN819-6Z	2	AN818-6D	2
13A-71821-15	3/8 X .049 X 52	AMS-4083 65S-T6 30B/1983	AN819-6Z	2	AN818-6D	2
13A-71821-17	1/4 X .020 X 4	MIL-T-6845 18-8 30B/1961	AN819-4	2	AN818-4	2
13A-71821-19	1/4 X .020 X 4	MIL-T-6845 18-8 30B/1961	AN819-4	2	AN818-4	2
13A-71821-23	1/4 X .035 X 22	WW-T-787 57S-0 30B/695	AN819-4Z	2	AN818-4D	2
13A-71821-25	1/4 X .035 X 19	WW-T-787 57S-0 30B/695	AN819-4Z	2	AN818-4D	2
13A-71821-27	1/2 X .065 X 11	AMS-4083 65S-T6 30B/1982	AN819-8Z	2	AN818-8D	2
13A-71821-3	3/4 X .049 X 13	AMS-4083 65S-T6 30B/1986	AN819-12Z	2	AN818-12D	2
13A-71821-31	1/4 X .020 X 4	MIL-T-6845 18-8 30B/1961	AN819-4	2	AN818-4	2
13A-71821-33	1/4 X .035 X 33	WW-T-787 57S-0 30B/695	AN819-4Z	2	AN818-4D	2
13A-71821-35	1/4 X .020 X 4	MIL-T-6845 18-8 30B/1961	AN819-4	2	AN818-4	2

PART NUMBER	SIZE, GAUGE, STRAIGHT LENGTH	MATERIAL SPEC.	FITTINGS			
			SLEEVE	QTY	NUT	QTY
	HYDRAULIC SYSTEM (CONTINUED)					
13A-71821-37	1/4 X .035 X 19	WW-T-787 57S-0 30B/695	AN819-4Z	2	AN818-4D	2
13A-71821-5	1/2 X .035 X 11	MIL-T-6845 18-8 30B/1969	AN819-8	2	AN818-8	2
13A-71821-7	3/8 X .049 X 31	AMS-4083 65S-T6 30B/1983	AN819-6Z	2	AN818-6D	2
13A-71821-9	3/8 X .049 X 35	AMS-4083 65S-T6 30B/1983	AN819-6Z	2	AN818-6D	2
13A-71823-3	1/2 X .035 X 98	MIL-T-6845 18-8 30B/1969	AN819-8	2	AN818-8	2
13A-71823-5	1/2 X .035 X 97	MIL-T-6845 18-8 30B/1969	AN819-8	2	AN818-8	2
13A-71823-7	3/8 X .028 X 44	MIL-T-6845 18-8 30B/1977	AN819-6	2	AN818-6	2
13A-71823-9	3/8 X .028 X 44	MIL-T-6845 18-8 30B/1977	AN819-6	2	AN818-6	2
13A-71824-11	3/8 X .028 X 10-3/4	MIL-T-6845 18-8 30B/1977	AN819-6	2	AN818-6	2
13A-71824-13	3/8 X .028 X 15	MIL-T-6845 18-8 30B/1977	AN819-6	2	AN818-6	2
13A-71824-15	1/4 X .020 X 15	MIL-T-6845 18-8 30B/1961	AN819-4	2	AN818-4	2
13A-71824-17	3/8 X .028 X 17	MIL-T-6845 18-8 30B/1977	AN819-6	2	AN818-6	2
13A-71824-19	1/4 X .020 X 15	MIL-T-6845 18-8 30B/1961	AN819-4	2	AN818-4	2
13A-71824-21	3/8 X .028 X 14	MIL-T-6845 18-8 30B/1977	AN819-6	2	AN818-6	2
13A-71824-23	1/4 X .020 X 16	MIL-T-6845 18-8 30B/1961	AN819-4	2	AN818-4	2
13A-71824-25	1/4 X .028 X 32	MIL-T-6845 18-8 30B/1962	AN819-6	2	AN818-6	2
13A-71824-3	3/8 X .028 X 108	MIL-T-6845 18-8 30B/1977	AN819-6	2	AN818-6	2
13A-71824-5	3/8 X .028 X 108	MIL-T-6845 18-8 30B/1977	AN819-6	2	AN818-6	2
13A-71825-1009	3/8 X .028 X 17	MIL-T-6845 18-8 30B/1977	AN819-6	1	AN818-6	1
13A-71825-1011	3/8 X .028 X 21	MIL-T-6845 18-8 30B/1977	AN819-6	2	AN818-6	2

Size, gauge, straight length of the following Parts are to read as follows:-

13A-71821-37	1/4" x .035" x 29"

PART NUMBER	SIZE, GAUGE, STRAIGHT LENGTH	MATERIAL SPEC.	FITTINGS			
			SLEEVE	QTY	NUT	QTY
	HYDRAULIC SYSTEM (CONTINUED)					
13A-71825-1013	3/8 X .028 X 11	MIL-T-6845 18-8 30B/1977	AN819-6	1	AN818-6	1
13A-71825-1015	3/8 X .028 X 26	MIL-T-6845 18-8 30B/1977	AN819-6	2	AN818-6	2
13A-71825-11	3/8 X .035 X 21	AMS-4083 65S 30B/1981	AN819-6Z	2	AN818-6D	2
13A-71825-13	3/8 X .035 X 11	AMS-4083 65S 30B/1981	AN819-6Z	1	AN818-1	1
13A-71825-15	3/8 X .035 X 26	AMS-4083 18-8 30B/1981	AN819-6Z	2	AN818-6D	2
13A-71825-17	3/8 X .028 X 9	MIL-T-6845 18-8 30B/1977	AN819-6	2	AN818-6	2
13A-71825-3	3/8 X .028 X 26-1/2	MIL-T-6845 18-8 30B/1977	AN819-6	2	AN818-6	2
13A-71825-5	3/8 X .028 X 17	MIL-T-6845 18-8 30B/1977	AN819-6	1	AN818-6	1
13A-71825-7	1/4 X .020 X 15	MIL-T-6845 18-8 30B/1961	AN819-4	2	AN818-4	2
13A-71825-9	3/8 X .035 X 17	AMS-4083 65S 30B/1981	AN819-6Z	1	AN818-6D	1
13A-71826-11	3/8 X .035 X 11	AMS-4083 65S-T6 30B/1981	AN819-6Z	2	AN818-6D	2
13A-71826-13	3/8 X .035 X 10	AMS-4083 65S-T6 30B/1981	AN819-6Z	2	AN818-6D	2
13A-71826-15	3/8 X .035 X 14	AMS-4083 65S-T6 30B/1981	AN819-6Z	2	AN818-6D	2
13A-71826-17	1/4 X .035 X 28	AMS-4083 65S-T6 30B/1979	AN819-4Z	2	AN818-4D	2
13A-71826-21	1/4 X .035 X 52	WW-T-787 57S-0 30B/695	AN819-4Z	2	AN818-4D	2
13A-71826-23	1/4 X .035 X 52	WW-T-787 57S-0 30B/695	AN819-4Z	2	AN818-4D	2
13A-71826-3	3/8 X .035 X 5	AMS-4083 65S-T6 30B/1981	AN819-6Z	2	AN818-6D	2
13A-71826-5	3/8 X .035 X 27	AMS-4083 65S-T6 30B/1981	AN819-6Z	2	AN818-6D	2
13A-71826-7	3/8 X .035 X 24	AMS-4083 65S-T6 30B/1981	AN819-6Z	2	AN818-6D	2
13A-71826-9	3/8 X .035 X 39-1/4	AMS-4083 65S-T6 30B/1981	AN819-6Z	2	AN818-6D	2

PART NUMBER	SIZE, GAUGE, STRAIGHT LENGTH	MATERIAL SPEC.	FITTINGS			
			SLEEVE	QTY	NUT	QTY
	HYDRAULIC SYSTEM (CONTINUED)					
13A-71827-1003	3/8 X .028 X 36-1/2	MIL-T-6845 18-8 30B/1977	AN819-6	2	AN818-6	2
13A-71827-3	3/8 X .049 X 36-1/2	WW-T-787 57S-0 30B/835	AN819-6Z	2	AN818-6D	2
13A-71827-5	1/2 X .065 X 46	AMS-4083 65S-T6 30B/2033	AN819-8Z	2	AN818-8D	2
13A-71830-101	1/2 X .065 X 20	AMS-4083 65S-T6 30B/2033	AN819-8Z	2	AN818-8D	2
13A-71830-103	3/8 X .049 X 10	AMS-4083 65S-T6 30B/1983	AN819-6Z	2	AN818-6D	2
13A-71830-105	3/8 X .049 X 8-3/4	AMS-4083 65S-T6 30B/1983	AN819-6Z	2	AN818-6D	2
13A-71830-107	3/8 X .049 X 7-3/4	AMS-4083 65S-T6 30B/1983	AN819-6Z	2	AN818-6D	2
13A-71830-109	3/8 X .049 X 5-5/8	AMS-4083 65S-T6 30B/1983	AN819-6Z	2	AN818-6D	2
13A-71830-11	1/2 X .035 X 40	MIL-T-6845 18-8 30B/1969	AN819-8	2	AN818-8	2
13A-71830-111	1/4 X .035 X 13-1/8	AMS-4083 65S-T6 30B/1979	AN819-4Z	2	AN818-4D	2
13A-71830-113	1/4 X .035 X 21-5/8	AMS-4083 65S-T6 30B/1979	AN819-4Z	2	AN818-4D	2
13A-71830-115	1/4 X .035 X 10	AMS-4083 65S-T6 30B/1979	AN819-4Z	2	AN818-4D	2
13A-71830-117	3/8 X .049 X 17	AMS-4083 65S-T6 30B/1983	AN819-6Z	2	AN818-6D	2
13A-71830-13	1/2 X .035 X 12	MIL-T-6845 18-8 30B/1969	AN819-8	2	AN818-8	2
13A-71830-15	1/2 X .065 X 55	AMS-4083 65S-T6 30B/2033	AN819-8Z	2	AN818-8D	2
13A-71830-17	1/2 X .035 X 4	MIL-T-6845 18-8 30B/1969	AN819-8	2	AN818-8	2
13A-71830-19	1/2 X .035 X 8	MIL-T-6845 18-8 30B/1969	AN819-8	2	AN818-8	2
13A-71830-21	1/2 X .049 X 16	AMS-4083 65S-T6 30B/1984	AN819-8Z	2	AN818-8D	2
13A-71830-23	1/2 X .049 X 52	AMS-4083 65S-T6 30B/1984	AN819-8Z	2	AN818-8D	2
13A-71830-25	3/8 X .049 X 10	AMS-4083 65S-T6 30B/1983	AN819-6Z	2	AN818-6D	2

PART NUMBER	SIZE, GAUGE, STRAIGHT LENGTH	MATERIAL SPEC.	FITTINGS			
			SLEEVE	QTY	NUT	QTY
	HYDRAULIC SYSTEM (CONTINUED)					
13A-71830-27	1/4 X .020 X 14	MIL-T-6845 18-8 30B/1961	AN819-4	2	AN818-4	2
13A-71830-29	1/2 X .035 X 10	MIL-T-6845 18-8 30B/1969	AN819-8	2	AN818-8	2
13A-71830-3	1/2 X .035 X 14	MIL-T-6845 18-8 30B/1969	AN819-8	2	AN818-8	2
13A-71830-31	1/2 X .035 X 10	MIL-T-6845 18-8 30B/1969	AN819-8	2	AN818-8	2
13A-71830-33	3/8 X .049 X 3	AMS-4083 65S-T6 30B/1983	AN819-6Z	2	AN818-6D	2
13A-71830-35	3/8 X .049 X 16	AMS-4083 65S-T6 30B/1983	AN819-6Z	2	AN818-6D	2
13A-71830-37	3/8 X .049 X 15	AMS-4083 65S-T6 30B/1983	AN819-6Z	2	AN818-6D	2
13A-71830-39	1/4 X .020 X 46	MIL-T-6845 18-8 30B/1961	AN819-4	2	AN818-4	2
13A-71830-41	1/4 X .020 X 48	MIL-T-6845 18-8 30B/1961	AN819-4	2	AN818-4	2
13A-71830-43	1/4 X .020 X 55	MIL-T-6845 18-8 30B/1961	AN819-4	2	AN818-4	2
13A-71830-45	1/4 X .020 X 47	MIL-T-6845 18-8 30B/1961	AN819-4	2	AN818-4	2
13A-71830-47	1/4 X .020 X 25	MIL-T-6845 18-8 30B/1961	AN819-4	2	AN818-4	2
13A-71830-49	1/4 X .020 X 15-1/2	MIL-T-6845 18-8 30B/1961	AN819-4	2	AN818-4	2
13A-71830-5	1/2 X .035 X 21	MIL-T-6845 18-8 30B/1969	AN819-8	2	AN818-8	2
13A-71830-51	1/4 X .020 X 12-1/4	MIL-T-6845 18-8 30B/1961	AN819-4	2	AN818-4	2
13A-71830-53	1/4 X .020 X 15-1/4	MIL-T-6845 18-8 30B/1961	AN819-4	2	AN818-4	2
13A-71830-55	1/4 X .020 X 10-1/2	MIL-T-6845 18-8 30B/1961	AN819-4	2	AN818-4	2
13A-71830-57	1/4 X .020 X 11	MIL-T-6845 18-8 30B/1961	AN819-4	2	AN818-4	2
13A-71830-59	1/4 X .020 X 22-1/2	MIL-T-6845 18-8 30B/1961	AN819-4	2	AN818-4	2
13A-71830-61	1/2 X .065 X 11	AMS-4083 65S-T6 30B/2033	AN819-8Z	2	AN818-8D	2

PART NUMBER	SIZE, GAUGE, STRAIGHT LENGTH	MATERIAL SPEC.	FITTINGS			
			SLEEVE	QTY	NUT	QTY
	HYDRAULIC SYSTEM (CONTINUED)					
13A-71830-63	1/2 X .065 X 17	AMS-4083 65S-T6 30B/2033	AN819-8Z	2	AN818-8D	2
13A-71830-65	1/2 X .065 X 20	AMS-4083 65S-T6 30B/2033	AN819-8Z	2	AN818-8D	2
13A-71830-67	1/2 X .065 X 22	AMS-4083 65S-T6 30B/2033	AN819-8Z	2	AN818-8D	2
13A-71830-69	1/2 X .065 X 46	AMS-4083 65S-T6 30B/2033	AN819-8Z	2	AN818-8D	2
13A-71830-7	1/4 X .020 X 16	MIL-T-6845 18-8 30B/1961	AN819-4	2	AN818-4	2
13A-71830-75	1/2 X .035 X 20	MIL-T-6845 18-8 30B/1969	AN819-8	2	AN818-8	2
13A-71830-77	1/4 X .035 X 16	AMS-4083 65S-T6 30B/1979	AN819-4Z	2	AN818-4D	2
13A-71830-79	3/8 X .049 X 11	AMS-4083 65S-T6 30B/1983	AN819-6Z	2	AN818-6D	2
13A-71830-81	1/4 X .035 X 46	AMS-4083 65S-T6 30B/1979	AN819-4Z	2	AN818-4D	2
13A-71830-83	1/4 X .035 X 48	AMS-4083 65S-T6 30B/1979	AN819-4Z	2	AN818-4D	2
13A-71830-85	1/4 X .035 X 55	AMS-4083 65S-T6 30B/1979	AN819-4Z	2	AN818-4D	2
13A-71830-87	1/4 X .035 X 47	AMS-4083 65S-T6 30B/1979	AN819-4Z	2	AN818-4D	2
13A-71830-89	1/4 X .035 X 25	AMS-4083 65S-T6 30B/1979	AN819-4Z	2	AN818-4D	2
13A-71830-9	3/8 X .028 X 11	MIL-T-6845 18-8 30B/1977	AN819-6	2	AN818-6	2
13A-71830-91	1/4 X .035 X 15-1/2	AMS-4083 65S-T6 30B/1979	AN819-4Z	2	AN818-4D	2
13A-71830-93	1/4 X .035 X 12-1/4	AMS-4083 65S-T6 30B/1979	AN819-4Z	2	AN818-4D	2
13A-71830-95	1/4 X .035 X 15-1/4	AMS-4083 65S-T6 30B/1979	AN819-4Z	2	AN818-4D	2
13A-71830-97	1/4 X .035 X 10-1/2	AMS-4083 65S-T6 30B/1979	AN819-4Z	2	AN818-4D	2
13A-71830-99	1/4 X .035 X 11	AMS-4083 65S-T6 30B/1979	AN819-4Z	2	AN818-4D	2
13A-71831-1021	3/8 X .028 X 76	MIL-T-6845 18-8 30B/1977	AN819-6	2	AN818-6	2

PART NUMBER	SIZE, GAUGE, STRAIGHT LENGTH	MATERIAL SPEC.	FITTINGS			
			SLEEVE	QTY	NUT	QTY
	HYDRAULIC SYSTEM (CONTINUED)					
13A-71831-11	1/2 X .049 X 62	AMS-4083 65S-T6 30B/1984	AN819-8Z	2	AN818-8D	2
13A-71831-13	1/2 X .049 X 42	AMS-4083 65S-T6 30B/1984	AN819-8Z	2	AN818-8D	2
13A-71831-15	3/8 X .049 X 32	AMS-4083 65S-T6 30B/1983	AN819-6Z	2	AN818-6D	2
13A-71831-17	1/2 X .065 X 72	AMS-4083 65S-T6 30B/2033	AN819-8Z	2	AN818-8D	2
13A-71831-19	1/2 X .065 X 57	AMS-4083 65S-T6 30B/2033	AN819-8Z	2	AN818-8D	2
13A-71831-21	3/8 X .049 X 76	AMS-4083 65S-T6 30B/1983	AN819-6Z	2	AN818-6D	2
13A-71831-3	1/2 X .035 X 12	MIL-T-6845 18-8 30B/1969	AN819-8	2	AN818-8	2
13A-71831-5	1/2 X .035 X 57	MIL-T-6845 18-8 30B/1969	AN819-8	2	AN818-8	2
13A-71831-7	1/2 X .049 X 36	AMS-4083 65S-T6 30B/1984	AN819-8Z	2	AN818-8D	2
13A-71831-9	3/8 X .049 X 62	AMS-4083 65S-T6 30B/1983	AN819-6Z	2	AN818-6D	2
13A-71851-1007	3/8 X .028 X 11	AMS-5566 18-8 30B/1977	AN819-6	2	AN818-6	2
13A-71851-1009	3/8 X .028 X 22	AMS-5566 18-8 30B/1977	AN819-6	2	AN818-6	2
13A-71851-1011	3/8 X .028 X 70	AMS-5566 18-8 30B/1977	AN819-6	2	AN818-6	2
13A-71851-1013	3/8 X .028 X 88	AMS-5566 18-8 30B/1977	AN819-6	2	AN818-6	2
13A-71851-3	3/8 X .049 X 46	AMS-4083 65S-T6 30B/1983	AN819-6Z	2	AN818-6D	2
13A-71851-5	3/8 X .049 X 85	WW-T-787 57S-0 30B/835	AN819-6Z	2	AN818-6D	2
13A-71851-7	3/8 X .049 X 11	WW-T-787 57S-0 30B/835	AN819-6Z	2	AN818-6D	2
13A-71851-9	3/8 X .049 X 22	WW-T-787 57S-0 30B/835	AN819-6Z	2	AN818-6D	2
13A-71861-1011	3/8 X .049 X 59	WW-T-787 52S 30B/835	AN819-6Z	2	AN818-6D	2
13A-71861-1013	3/8 X .049 X 23	WW-T-787 52S 30B/835	AN819-6Z	2	AN818-6D	2

PART NUMBER	SIZE, GAUGE, STRAIGHT LENGTH	MATERIAL SPEC.	FITTINGS			
			SLEEVE	QTY	NUT	QTY
	HYDRAULIC SYSTEM (CONTINUED)					
13A-71861-1015	3/8 X .028 X 57	AMS-5566 18-8 30B/1977	AN819-6	2	AN818-6	2
13A-71861-3	3/8 X .049 X 11	WW-T-787 52S 30B/835	AN819-6Z	2	AN818-6D	2
13A-71861-5	3/8 X .049 X 51	WW-T-787 52S 30B/835	AN819-6Z	2	AN818-6D	2
13A-71861-7	3/8 X .049 X 27	WW-T-787 52S 30B/835	AN819-6Z	2	AN818-6D	2
13A-71861-9	3/8 X .049 X 48	AMS-4083 65S-T6 30B/1983	AN819-6Z	2	AN818-6D	2
13A-71871-1003	3/8 X .028 X 29	MIL-T-6845 18-8 30B/1977	AN819-6	2	AN818-6	2
13A-71871-1007	3/8 X .028 X 3	MIL-T-6845 18-8 30B/1977	AN819-6	2	AN818-6	2
13A-71871-1009	3/8 X .028 X 18	MIL-T-6845 18-8 30B/1977	AN819-6	2	AN818-6	2
13A-71871-1011	3/8 X .028 X 9	MIL-T-6845 18-8 30B/1977	AN819-6	2	AN818-6	2
13A-71871-1017	3/8 X .028 X 30	MIL-T-6845 18-8 30B/1977	AN819-6	2	AN818-6	2
13A-71871-1019	3/8 X .028 X 10	MIL-T-6845 18-8 30B/1977	AN819-6	2	AN818-6	2
13A-71871-1021	3/8 X .028 X 15	MIL-T-6845 18-8 30B/1977	AN819-6	2	AN818-6	2
13A-71871-1023	3/8 X .028 X 16	MIL-T-6845 18-8 30B/1977	AN819-6	2	AN818-6	2
13A-71871-1029	3/8 X .028 X 26	MIL-T-6845 18-8 30B/1977	AN819-6	2	AN818-6	2
13A-71871-1031	3/8 X .028 X 24	MIL-T-6845 18-8 30B/1977	AN819-6	2	AN818-6	2
13A-71871-11	3/8 X .049 X 9	AMS-4083 65S-T6 30B/1983	AN819-6Z	2	AN818-6D	2
13A-71871-13	3/8 X .049 X 24	AMS-4083 65S-T6 30B/1983	AN819-6Z	2	AN818-6D	2
13A-71871-15	3/8 X .049 X 33	AMS-4083 65S-T6 30B/1983	AN819-6Z	2	AN818-6D	2
13A-71871-17	3/8 X .035 X 30	AMS-4083 65S-T6 30B/1981	AN819-6Z	2	AN818-6D	2
13A-71871-19	3/8 X .035 X 10	AMS-4083 65S-T6 30B/1981	AN819-6Z	2	AN818-6D	2

PART NUMBER	SIZE, GAUGE, STRAIGHT LENGTH	MATERIAL SPEC.	FITTINGS			
			SLEEVE	QTY	NUT	QTY
	HYDRAULIC SYSTEM (CONTINUED)					
13A-71871-21	3/8 X .035 X 15	AMS-4083 65S-T6 30B/1981	AN819-6Z	2	AN818-6D	2
13A-71871-23	3/8 X .035 X 16	AMS-4083 65S-T6 30B/1981	AN819-6Z	2	AN818-6D	2
13A-71871-25	1/4 X .035 X 13	AMS-4083 65S-T6 30B/1979	AN819-4Z	2	AN818-4D	2
13A-71871-27	1/4 X .035 X 10	AMS-4083 65S-T6 30B/1979	AN819-4Z	2	AN819-4D	2
13A-71871-29	3/8 X .049 X 26	AMS-4083 65S-T6 30B/1983	AN819-6Z	2	AN818-6D	2
13A-71871-3	3/8 X .049 X 29	AMS-4083 65S-T6 30B/1983	AN819-6Z	2	AN818-6D	2
13A-71871-31	3/8 X .049 X 24	AMS-4083 65S-T6 30B/1983	AN819-6Z	2	AN818-6D	2
13A-71871-5	3/8 X .049 X 25	AMS-4083 65S-T6 30B/1983	AN819-6Z	2	AN818-6D	2
13A-71871-7	3/8 X .049 X 3	AMS-4083 65S-T6 30B/1983	AN819-6Z	2	AN818-6D	2
13A-71871-9	3/8 X .049 X 18	AMS-4083 65S-T6 30B/1983	AN819-6Z	2	AN818-6D	2
151-58806-5	3/8 X .028 X 2-1/16	MIL-T-6845 18-8 30B/1977	AN819-6	2	AN818-6	2
151-58809-35	1/4 X .035 X 25-1/2	WW-T-787 57S-0 30B/695	AN819-4Z	2	AN818-4D	2
151-58809-37	1/4 X .020 X 14-1/8	MIL-T-6845 18-8 30B/1961	AN819-4	2	AN818-4	2
151-58809-39	1/4 X .020 X 9-1/2	MIL-T-6845 18-8 30B/1961	AN819-4	2	AN818-4	2
151-58809-55	1/4 X .020 X 8-1/2	MIL-T-6845 18-8 30B/1961	AN819-4	2	AN818-4	2
151-58810-35	1/4 X .035 X 26-1/4	WW-T-787 57S-0 30B/695	AN819-4Z	2	AN818-4D	2
151-58810-37	1/4 X .020 X 14-1/2	MIL-T-6845 18-8 30B/1961	AN819-4	2	AN818-4	2
151-58810-39	1/4 X .020 X 9-1/2	MIL-T-6845 18-8 30B/1961	AN819-4	2	AN818-4	2
151-58810-55	1/4 X .020 X 9-1/4	MIL-T-6845 18-8 30B/1961	AN819-4	2	AN818-4	2
151-58828-15	3/8 X .028 X 10	MIL-T-6845 18-8 30B/1977	AN819-6	2	AN818-6	2

PART NUMBER	SIZE, GAUGE, STRAIGHT LENGTH	MATERIAL SPEC.	FITTINGS			
			SLEEVE	QTY	NUT	QTY
	HYDRAULIC SYSTEM (CONTINUED)					
151-58828-35	1/4 X .035 X 5-1/4	WW-T-787 57S-0 30B/695 MIL-T-6845 18-8 30B/1961	AN819-4Z	2	AN818-4D	2
151-58828-65	1/4 X .020 X 21-3/4		AN819-4	2	AN818-4	2
151-58828-67	1/4 X .020 X 12-1/4	MIL-T-6845 18-8 30B/1961 WW-T-787 57S-0 30B/695 MIL-T-6845 18-8 30B/1961 MIL-T-6845 18-8 30B/1961 MIL-T-6845 18-8 30B/1961 MIL-T-6845 18-8 30B/1961 MIL-T-6845 18-8 30B/1961 MIL-T-6845 18-8 30B/1961 MIL-T-6845 18-8 30B/1961 AMS-4083 65S-T6 30B/1979 AMS-4083 65S-T6 30B/1979 AMS-4083 65S-T6 30B/1979 MIL-T-6845 18-8 30B/1961 MIL-T-6845 18-8 30B/1961 WW-T-787 57S-0 30B/835 MIL-T-6845 18-8 30B/1977 MIL-T-6845 18-8 30B/1977	AN819-4	2	AN818-4	2
151-58828-77	1/4 X .035 X 11-1/8		AN819-4Z	2	AN818-4D	2
151-58828-951	1/4 X .020 X 10		AN819-4	2	AN818-4	2
151-58831-31	1/4 X .020 X 11-1/4		AN819-4	2	AN818-4	2
151-58831-41	1/4 X .020 X 4		AN819-4	2	AN818-4	2
151-58831-43	1/4 X .020 X 4-1/8		AN819-4	2	AN818-4	2
151-58831-55	1/4 X .020 X 11		AN819-4	2	AN818-4	2
151-58831-65	1/4 X .020 X 2-3/8		AN819-4	2	AN818-4	2
151-58831-67	1/4 X .020 X 4		AN819-4	2	AN818-4	2
151-58831-69	1/4 X .020 X 4		AN819-4	2	AN818-4	2
151-58831-841	1/4 X .035 X 4		AN819-4Z	2	AN818-4D	2
151-58831-865	1/4 X .035 X 2-3/8		AN819-4Z	2	AN818-4D	2
151-58831-867	1/4 X .035 X 4		AN819-4Z	2	AN818-4D	2
161-58803-951	1/4 X .020 X 19		AN819-4	2	AN818-4	2
161-58805-15	1/4 X .020 X 15-1/4		AN819-4	2	AN818-4	2
165-58400	3/8 X .049 X 12		AN819D6	1	AN818D6	1
170-58799-61	3/8 X .028 X 36		AN819-6	2	AN818-6	2
170-58799-63	3/8 X .028 X 26		AN819-6	2	AN818-6	2

PART NUMBER	SIZE, GAUGE, STRAIGHT LENGTH	MATERIAL SPEC.	FITTINGS			
			SLEEVE	QTY	NUT	QTY
	HYDRAULIC SYSTEM (CONTINUED)					
170-58799-65	3/8 X .028 X 23-3/8	MIL-T-6845 18-8 30B/1977	AN819-6	2	AN818-6	2
170-58799-67	3/8 X .028 X 40	MIL-T-6845 18-8 30B/1977	AN819-6	2	AN818-6	2
170-58801-49	1/4 X.020 X 12-15/16	MIL-T-6845 18-8 30B/1961	AN819-4	2	AN818-4	2
170-58801-55	1/4 X .020 X 16-7/8	MIL-T-6845 18-8 30B/1961	AN819-4	2	AN818-4	2
170-58801-57	1/4 X .020 X 14-7/8	MIL-T-6845 18-8 30B/1961	AN819-4	2	AN818-4	2
170-58801-59	1/4 X .020 X 13-1/16	MIL-T-6845 18-8 30B/1961	AN819-4	2	AN818-4	2
170-58802-1007	3/8 X .028 X 56-3/16	AMS-5566 18-8 30B/1977	AN819-6	2	AN818-6	2
170-58802-1009	3/8 X .028 X 53-1/4	AMS-5566 18-8 30B/1977	AN819-6	2	AN818-6	2
170-58802-1023	3/8 X .028 X 59-3/4	AMS-5566 18-8 30B/1977	AN819-6	2	AN818-6	2
170-58802-1025	3/8 X .028 X 61-7/8	AMS-5566 18-8 30B/1977	AN819-6	2	AN818-6	2
170-58802-1077	3/8 X .028 X 9-1/2	AMS-5566 18-8 30B/1977	AN819-6	2	AN818-6	2
170-58802-1903	3/8 X .028 X 53-7/8	AMS-5566 18-8 30B/1977	AN819-6	2	AN818-6	2
170-58802-1905	3/8 X.028 X 55-13/32	AMS-5566 18-8 30B/1977	AN819-6	2	AN818-6	2
170-58802-1919	3/8 X .028 X 58-1/4	AMS-5566 18-8 30B/1977	AN819-6	2	AN818-6	2
170-58802-1921	3/8 X .028 X 56-1/8	AMS-5566 18-8 30B/1977	AN819-6	2	AN818-6	2
170-58802-23	3/8 X .049 X 59-3/4	WW-T-787 57S-0 30B/835	AN819-6Z	2	AN818-6D	2
170-58802-25	3/8 X .049 X 61-7/8	WW-T-787 52S 30B/835	AN819-6Z	2	AN818-6D	2
170-58802-7	3/8 X .049 X 56-3/16	WW-T-787 57S-0 30B/835	AN819-6Z	2	AN818-6D	2
170-58802-9	3/8 X .049 X 53-1/4	WW-T-787 52S 30B/835	AN819-6Z	2	AN818-6D	2
170-58802-903	3/8 X .049 X 53-7/8	AMS-4083 65S-T6 30B/1983	AN819-6Z	2	AN818-6D	2

PART NUMBER	SIZE, GAUGE, STRAIGHT LENGTH	MATERIAL SPEC.	FITTINGS			
			SLEEVE	QTY	NUT	QTY
	HYDRAULIC SYSTEM (CONTINUED)					
170-58802-905	3/8 X .049 X 55-13/32	AMS-4083 65S-T6 30B/1983	AN819-6Z	2	AN818-6D	2
170-58802-919	3/8 X .049 X 58-1/4	AMS-4083 65S-T6 30B/1983	AN819-6Z	2	AN818-6D	2
170-58802-921	3/8 X .049 X 56-1/8	AMS-4083 65S-T6 30B/1983	AN819-6Z	2	AN818-6D	2
170-58803-1023	3/8 X .028 X 63	AMS5566 18-8 30B/1977	AN819-6	2	AN818-6	2
170-58803-1025	3/8 X .028 X 65	AMS-5566 18-8 30B/1977	AN819-6	2	AN818-6	2
170-58803-1953	3/8 X .028 X 15	AMS-5566 18-8 30B/1977	AN819-6	2	AN818-6	2
170-58803-1957	3/8 X .028 X 25	AMS-5566 18-8 30B/1977	AN819-6	2	AN818-6	2
170-58803-23	3/8 X .049 X 63	WW-T-787 57S-0 30B/835	AN819-6Z	2	AN818-6D	2
170-58803-25	3/8 X .049 X 65	WW-T-787 57S 30B/835	AN819-6Z	2	AN818-6D	2
170-58803-3	1/4 X .035 X 26 5/8	WW-T-787 57S 30B/695	AN819-4Z	2	AN818-4D	2
170-58803-5	1/4 X .035 X 27-5/8	WW-T-787 57S 30B/695	AN819-4Z	2	AN818-4D	2
170-58803-53	3/8 X .049 X 12-1/8	WW-T-787 57S 30B/835	AN819-6Z	2	AN818-6D	2
170-58803-57	3/8 X .049 X 25	WW-T-787 57S 30B/835	AN819-6Z	2	AN818-6D	2
170-58803-7	1/4 X .035 X 7 15/16	WW-T-787 57S 30B/695	AN819-4Z	2	AN818-4D	2
170-58803-79	1/4 X .020 X 11-1/16	MIL-T-6845 18-8 30B/1961	AN819-4	2	AN818-4	2
170-58803-9	1/4 X .035 X 9 13/16	WW-T-787 57S 30B/695	AN819-4Z	2	AN818-4D	2
170-58803-953	3/8 X .049 X 15	WW-T-787 57S 30B/835	AN819-6Z	2	AN818-6D	2
170-58803-957	3/8 X .049 X 25	WW-T-787 57S 30B/835	AN819-6Z	2	AN818-6D	2
170-58804-31	3/8 X .035 X 17-1/16	AMS-4083 65S-T6 30B/1981	AN819-6Z	2	AN818-6D	2
170-58804-35	1/4 X .035 X 22-9/16	AMS-4083 65S-T6 30B/1979	AN819-4Z	2	AN818-4D	2

PART NUMBER	SIZE, GAUGE, STRAIGHT LENGTH	MATERIAL SPEC.	FITTINGS			
			SLEEVE	QTY	NUT	QTY
	HYDRAULIC SYSTEM (CONTINUED)					
170-58804-53	1/4 X .035 X 21-7/8	AMS-4083 65S-T6 30B/1979	AN819-4Z	2	AN818-4D	2
170-58804-57	1/4 X .035 X 11-5/16	AMS-4083 65S-T6 30B/1979	AN819-4Z	2	AN818-4D	2
170-58804-59	1/4 X .035 X 35-3/8	AMS-4083 65S-T6 30B/1979	AN819-4Z	2	AN818-4D	2
170-58804-67	1/4 X .035 X 11-5/16	AMS-4083 65S-T6 30B/1979	AN819-4Z	2	AN818-4D	2
170-58804-69	1/4 X.035 X 35-15/16	AMS-4083 65S-T6 30B/1979	AN819-4Z	2	AN818-4D	2
170-58804-951	1/4 X .035 X 15	AMS-4083 65S-T6 30B/1979	AN819-4Z	2	AN818-4D	2
170-58804-953	3/8 X .035 X 21	AMS-4083 65S-T6 30B/1981	AN819-6Z	2	AN818-6D	2
170-58804-961	1/4 X .035 X 7	AMS-4083 65S-T6 30B/1979	AN819-4Z	2	AN818-4D	2
170-58804-963	1/4 X .035 X	AMS-4083 65S-T6 30B/1979	AN819-4Z	2	AN818-4D	2
170-58805-31	1/4 X .035 X 17-5/8	WW-T-787 57S- 30B/695	AN819-4Z	2	AN818-4D	2
170-58805-61	1/4 X .035 X 8-11/16	WW-T-787 57S-T6 30B/695	AN819-4Z	2	AN818-4D	2
170-58805-951	1/4 X .035 X 9	AMS-4083 65S-T6 30B/1979	AN819-4Z	2	AN818-4D	2
170-58805-953	1/4 X .035 X 16	AMS-4083 65S-T6 30B/1979	AN819-4Z	2	AN818-4D	2
170-58805-955	3/8 X .035 X 16	AMS-4083 65S-T6 30B/1981	AN819-6Z	2	AN818-6D	2
170-58807-27	1/4 X .035 X 21-1/2	WW-T-787 57S-0 30B/695	AN819-4Z	2	AN818-4D	2
170-58814-19	3/8 X .028 X	MIL-T-6845 18-8 30B/1977	AN819-6	2	AN818-6	2
170-58814-35	3/8 X .028 X 13	MIL-T-6845 18-8 30B/1977	AN819-6	2	AN818-6	2
170-58814-49	3/8 X .028 X 4-1/8	MIL-T-6845 18-8 30B/1977	AN819-6	2	AN818-6	2
170-58814-51	3/8 X .028 X 26	MIL-T-6845 18-8 30B/1977	AN819-6	2	AN818-6	2
170-58814-57	3/8 X .028 X 9-7/16	MIL-T-6845 18-8 30B/1977	AN819-6	2	AN818-6	2

PART NUMBER	SIZE, GAUGE, STRAIGHT LENGTH	MATERIAL SPEC.	FITTINGS			
			SLEEVE	QTY	NUT	QTY
	HYDRAULIC SYSTEM (CONTINUED)					
170-58815-951	3/8 X .035 X 28	AMS-4083 65S-T6 30B/1981	AN819-6Z	2	AN818-6D	2
170-58815-953	3/8 X .049 X 12	WW-T-787 57S-0 30B/835	AN819-6Z	2	AN818-6D	2
172-58801-1025	3/8 X .028 X 3 9/16	MIL-T-6845 18-8 30B/1977	AN819-6Z	2	AN818-6D	2
172-58801-1027	3/8 X .028 X 37	MIL-T-6845 18-8 30B/1977	AN819-6	2	AN818-6	2
172-58801-25	3/8 X .035 X 3 9/16	AMS-4083 65S-T6 30B/1981	AN819-6Z	2	AN818-6D	2
172-58801-27	3/8 X .035 X 37	AMS-4083 65S-T6 30B/1981	AN819-6Z	2	AN818-6D	2
172-58801-3	3/8 X .035 X 12 1/8	AMS-4083 65S-T6 30B/1981	AN819-6Z	2	AN818-6D	2
172-58801-65	1/4 X .020 X 15-3/4	MIL-T-6845 18-8 30B/1961	AN819-4	2	AN818-4	2
172-58801-9	3/8 X .035 X 1511/16	AMS-4083 65S-T6 30B/1981	AN819-6Z	2	AN818-6D	2
172-58802-1011	3/8 X .028 X 10-1/8	AMS-5566 18-8 30B/1977	AN819-6	2	AN818-6	2
172-58802-1017	3/8 X .028 X 56-3/16	AMS-5566 18-8 30B/1977	AN819-6	2	AN818-6	2
172-58802-1025	3/8 X .028 X 6-3/4	AMS-5566 18-8 30B/1977	AN819-6	2	AN818-6	2
172-58802-11	3/8 X .049 X 10-1/8	WW-T-787 57S 30B/835	AN819-6Z	2	AN818-6D	2
172-58802-17	3/8 X .049 X 56-3/16	WW-T-787 57S 30B/835	AN819-6Z	2	AN818-6D	2
172-58802-1954	3/8 X .028 X 69	AMS-5566 18-8 30B/1977	AN819-6	2	AN818-6	2
172-58802-1956	3/8 X .028 X 36	AMS-5566 18-8 30B/1977	AN819-6	2	AN818-6	2
172-58802-25	3/8 X .049 X 6-3/4	WW-T-787 57S-0 30B/835	AN819-6Z	2	AN818-6D	2
172-58802-954	3/8 X .035 X 69	AMS-4083 65S-T6 30B/1981	AN819-6Z	2	AN818-6D	2
172-58802-955	1/4 X .020 X 23	MIL-T-6845 18-8 30B/1961	AN819-4	2	AN818-4	2
172-58802-956	3/8 X .035 X 36	AMS-4083 65S-T6 30B/1981	AN819-6Z	2	AN818-6D	2

PART NUMBER	SIZE, GAUGE, STRAIGHT LENGTH	MATERIAL SPEC.	FITTINGS			
			SLEEVE	QTY	NUT	QTY
	HYDRAULIC SYSTEM (CONTINUED)					
172-58802-957	1/4 X .020 X 22	MIL-T-6845 18-8 30B/1961	AN819-4	2	AN818-4	2
172-58805-3	1/4 X .020 X 12	MIL-T-6845 18-8 30B/1961	AN819-4	2	AN818-4	2
172-58805-5	1/4 X .020 X 29	MIL-T-6845 18-8 30B/1961	AN819-4	2	AN818-4	2
172-58805-9	1/4 X .020 X 28	MIL-T-6845 18-8 30B/1961	AN819-4	2	AN818-4	2
172-58807-1061	3/8 X .028 X 27	MIL-T-6845 18-8 30B/1977	AN819-6	2	AN818-6	2
172-58807-15	3/8 X .035 X 15	AMS-4083 65S-T6 30B/1981	AN819-6Z	2	AN818-6D	2
172-58807-21	1/4 X .035 X 14	WW-T-787 57S 30B/695	AN819-4Z	2	AN818-4D	2
172-58807-23	1/4 X .035 X 40	WW-T-787 57S-0 30B/695	AN819-4Z	2	AN818-4D	2
172-58807-29	3/8 X.035 X 19-11/16	AMS-4083 65S-T6 30B/1981	AN819-6Z	2	AN818-6D	2
172-58807-3	1/4 X .035 X 17	WW-T-787 57S 30B/695	AN819-4Z	2	AN818-4D	2
172-58807-31	3/8 X .035 X 32-7/8	AMS-4083 65S-T6 30B/1981	AN819-6Z	2	AN818-6D	2
172-58807-33	3/8 X .035 X 41	AMS-4083 65S-T6 30B/1981	AN819-6Z	2	AN818-6D	2
172-58807-39	1/4 X .035 X 53	WW-T-787 57S 30B/695	AN819-4Z	2	AN818-4D	2
172-58807-61	3/8 X .049 X 27	WW-T-787 52S- 30B/835	AN819-6Z	2	AN818-6D	2
172-58807-63	3/8 X .049 X 10	WW-T-787 57S- 30B/835	AN819-6Z	2	AN818-6D	2
172-58807-65	1/4 X .035 X 10	WW-T-787 57S 30B/695	AN819-4Z	2	AN818-4D	2
172-58807-75	1/4 X .035 X 9	WW-T-787 57S- 30B/695	AN819-4Z	2	AN818-4D	2
172-58807-77	1/4 X .035 X 9	WW-T-787 57S- 30B/695	AN819-4Z	2	AN818-4D	2
172-58807-79	3/8 X .035 X 19	AMS-4083 65S-T6 30B/1981	AN819-6Z	2	AN818-6D	2
172-58810-15	1/2 X .049 X 14-3/4	AMS-4083 65S-T6 30B/1984	AN819-8Z	2	AN818-8D	2

PART NUMBER	SIZE, GAUGE, STRAIGHT LENGTH	MATERIAL SPEC.	FITTINGS			
			SLEEVE	QTY	NUT	QTY
	HYDRAULIC SYSTEM (CONTINUED)					
172-58810-17	1/4 X .049 X 11-3/4	AMS-4083 65S 30B/2032	AN819-8Z	2	AN818-8D	2
172-58810-25	1/2 X .035 X 51-1/8	MIL-T-6845 18-8 30B/1969	AN819-8	2	AN818-8	2
172-58810-29	1/2 X .035 X 43-5/16	MIL-T-6845 18-8 30B/1969	AN819-8	2	AN818-8	2
172-58810-31	1/2 X .035 X 37-7/8	MIL-T-6845 18-8 30B/1969	AN819-8	2	AN818-8	2
172-58810-33	1/2 X .035 X 35-5/8	MIL-T-6845 18-8 30B/1969	AN819-8	2	AN818-8	2
172-58810-63	1/4 X .020 X 9-1/2	MIL-T-6845 18-8 30B/1961	AN819-4	2	AN818-4	2
172-58810-800	1/2 X .035 X 46	MIL-T-6845 18-8 30B/1969	AN819-8	2	AN818-8	2
172-58813-17	1/4 X .035 X 6-3/4	AMS-4083 65S-T6 30B/1979	AN819-4Z	2	AN818-4D	2
172-58813-41	3/8 X .035 X 17	AMS-4083 65S-T6 30B/1981	AN819-6Z	2	AN818-6D	2
172-58813-63	3/8 X .028 X 10	MIL-T-6845 18-8 30B/1977	AN819-6	2	AN818-6	2
172-58813-65	3/8 X .028 X 8-3/4	MIL-T-6845 18-8 30B/1977	AN819-6	2	AN818-6	2
172-58813-67	3/8 X .028 X 7-3/4	MIL-T-6845 18-8 30B/1977	AN819-6	2	AN818-6	2
172-58813-69	3/8 X .028 X 5-5/8	MIL-T-6845 18-8 30B/1977	AN819-6	2	AN818-6	2
172-58813-77	1/4 X .020 X 13-1/8	MIL-T-6845 18-8 30B/1961	AN819-4	2	AN818-4	2
172-58814-23	1/4 X .020 X 21-5/8	MIL-T-6845 18-8 30B/1961	AN819-4	2	AN818-4	2
172-58814-27	3/8 X .035 X 10-3/8	AMS4083 65S-T6 30B/1981	AN819-6Z	2	AN818-6D	2
172-58815-41	3/8 X .035 X 13-7/16	AMS-4083 65S-T6 30B/1981	AN819-6Z	2	AN818-6D	2
172-58817-75	1/4 X .035 X 25-1/8	MIL-T-6845 18-8 30B/1963	AN819-4	2	AN818-4	2
172-58818-1011	3/8 X .028 X 34-5/8	MIL-T-6845 18-8 30B/1977	AN819-6	2	AN818-6	2
172-58818-11	3/8 X .049 X 34-5/8	WW-T-787 57S-0 30B/835	AN819-6Z	2	AN818-6D	2

PART NUMBER	SIZE, GAUGE, STRAIGHT LENGTH	MATERIAL SPEC.	FITTINGS			
			SLEEVE	QTY	NUT	QTY
	HYDRAULIC SYSTEM (CONTINUED)					
172-58818-13	1/2 X .049 X 24-1/4	WW-T-787 57S-0 30B/973	AN819-8Z	2	AN818-8D	2
172-58818-25	1/4 X .035 X 9-1/16	WW-T-787 57S-0 30B/695	AN819-4Z	2	AN818-4D	2
172-58818-27	1/2 X .049 X 39-3/4	WW-T-787 57S-0 30B/973	AN819-8Z	2	AN818-8D	2
172-58818-29	1/2 X .049 X 4-5/8	WW-T-787 57S-0 30B/973	AN819-8Z	2	AN818-8D	2
172-58818-41	1/4 X .035 X 46-1/4	WW-T-787 57S 30B/695	AN819-4Z	2	AN818-4D	2
172-58818-43	1/4 X .035 X 53-1/2	WW-T-787 57S 30B/695	AN819-4Z	2	AN818-4D	2
172-58818-47	1/2 X .049 X 8-1/2	WW-T-787 57S-0 30B/973	AN819-8Z	2	AN818-8D	2
172-58818-55	1/4 X .035 X 18	WW-T-787 57S- 30B/695	AN819-4Z	2	AN818-4D	2
172-58818-59	1/4 X .035 X 25-3/4	WW-T-787 57S-0 30B/695	AN819-4Z	2	AN818-4D	2
172-58821-11	3/8 X .028 X 17	MIL-T-6845 18-8 30B/1977	AN819-6	2	AN818-6	2
172-58821-15	3/8 X .028 X 26-3/16	MIL-T-6845 18-8 30B/1977	AN819-6	2	AN818-6	2
172-58821-19	3/8 X .028 X 18-1/8	MIL-T-6845 18-8 30B/1977	AN819-6	2	AN818-6	2
172-58821-23	3/8 X .028 X 15-5/8	MIL-T-6845 18-8 30B/1977	AN819-6	2	AN818-6	2
172-58821-29	3/8 X .028 X 23-1/4	MIL-T-6845 18-8 30B/1977	AN819-6	2	AN818-6	2
172-58821-35	3/8 X .028 X 10-7/8	MIL-T-6845 18-8 30B/1977	AN819-6	2	AN818-6	2
172-58821-37	3/8 X .028 X 38-1/4	MIL-T-6845 18-8 30B/1977	AN819-6	2	AN818-6	2
172-58821-39	3/8 X .028 X 16-7/8	MIL-T-6845 18-8 30B/1977	AN819-6	2	AN818-6	2
172-58821-49	3/8 X .028 X 17-3/4	MIL-T-6845 18-8 30B/1977	AN819-6	2	AN818-6	2
172-58821-51	3/8 X .028 X 23-5/8	MIL-T-6845 18-8 30B/1977	AN819-6	2	AN818-6	2
172-58821-55	3/8 X .028 X 36-1/4	MIL-T-6845 18-8 30B/1977	AN819-6	2	AN818-6	2

PART NUMBER	SIZE, GAUGE, STRAIGHT LENGTH	MATERIAL SPEC.	FITTINGS			
			SLEEVE	QTY	NUT	QTY
	HYDRAULIC SYSTEM (CONTINUED)					
172-58821-57	3/8 X .028 X 19-1/4	MIL-T-6845 18-8 30B/1977	AN819-6	2	AN818-6	2
172-58821-59	3/8 X .028 X 19	MIL-T-6845 18-8 30B/1977	AN819-6	2	AN818-6	2
172-58821-61	3/8 X .028 X 27	MIL-T-6845 18-8 30B/1977	AN819-6	2	AN818-6	2
172-58821-65	3/8 X .028 X 19-1/8	MIL-T-6845 18-8 30B/1977	AN819-6	2	AN818-6	2
172-58821-69	3/8 X .028 X 17-1/16	MIL-T-6845 18-8 30B/1977	AN819-6	2	AN818-6	2
172-58821-71	3/8 X .028 X 30-5/8	MIL-T-6845 18-8 30B/1977	AN819-6	2	AN818-6	2
172-58822-25	3/8 X .028 X 34-1/4	MIL-T-6845 18-8 30B/1977	AN819-6	3	AN818-6	3
172-58822-29	3/8 X .028 X 26	MIL-T-6845 18-8 30B/1977	AN819-6	2	AN818-6	2
172-58822-31	3/8 X .028 X 15	MIL-T-6845 18-8 30B/1977	AN819-6	2	AN818-6	2
172-58822-49	3/8 X .028 X 18	MIL-T-6845 18-8 30B/1977	AN819-6	1	AN818-6	1
172-58822-53	3/8 X .028 X 10	MIL-T-6845 18-8 30B/1977	AN819-6	2	AN818-6	2
172-58822-65	3/8 X .028 X 12	MIL-T-6845 18-8 30B/1977	AN819-6	2	AN818-6	2
172-58822-69	3/8 X .028 X 6-9/16	MIL-T-6845 18-8 30B/1977	AN819-6	2	AN818-6	2
172-58822-951	3/8 X .028 X 36	MIL-T-6845 18-8 30B/1977	AN819-6	2	AN818-6	2
172-58823-19	1/2 X .035 X 9-7/16	MIL-T-6845 18-8 30B/1977	AN819-8	2	AN818-8	2
172-58823-21	3/8 X .028 X 15-1/2	MIL-T-6845 18-8 30B/1969	AN819-6	2	AN818-6	2
172-58823-27	3/8 X .028 X 15-1/4	MIL-T-6845 18-8 30B/1977	AN819-6	2	AN818-6	2
172-58823-31	1/4 X.020 X 30-11/16	MIL-T-6845 18-8 30B/1977	AN819-4	2	AN818-4	2
172-58823-33	1/4 X.020 X 16-15/16	MIL-T-6845 18-8 30B/1961	AN819-4	2	AN818-4	2
172-58823-37	3/8 X .028 X 14-9/16	MIL-T-6845 18-8 30B/1961 30B/1977	AN819-6	2	AN818-6	2

PART NUMBER	SIZE, GAUGE, STRAIGHT LENGTH	MATERIAL SPEC.	FITTINGS			
			SLEEVE	QTY	NUT	QTY
	HYDRAULIC SYSTEM (CONTINUED)					
172-58823-39	3/8 X .028 X 10-1/8	MIL-T-6845 18-8 30B/1977	AN819-6	2	AN818-6	2
172-58823-45	3/8 X .028 X 10-5/16	MIL-T-6845 18-8 30B/1977	AN819-6	2	AN818-6	2
191-58801-11	1/4 X .035 X 8-3/8	AMS-4083 65S-T6 30B/1979	AN819-4Z	2	AN818-4D	2
191-58801-13	1/4 X .035 X 7-3/8	AMS-4083 65S-T6 30B/1979	AN819-4Z	2	AN818-4D	2
191-58801-15	1/4 X .035 X 17-1/4	AMS-4083 65S-T6 30B/1979	AN819-4Z	2	AN818-4D	2
191-58801-17	1/4 X.035 X 25-13/16	AMS-4083 65S-T6 30B/1979	AN819-4Z	2	AN818-4D	2
191-58801-19	1/4 X .035 X 29-3/16	AMS-4083 65S-T6 30B/1979	AN819-4Z	2	AN818-4D	2
191-58801-21	1/4 X .035 X 11	AMS-4083 65S-T6 30B/1979	AN819-4Z	2	AN818-4D	2
191-58801-25	1/4 X .035 X 51	AMS-4083 65S-T6 30B/1979	AN819-4Z	2	AN818-4D	2
191-58801-27	1/4 X .035 X 19	AMS-4083 65S-T6 30B/1979	AN819-4Z	2	AN818-4D	2
191-58801-3	1/4 X .035 X 6-9/16	AMS-4083 65S-T6 30B/1979	AN819-4Z	2	AN818-4D	2
191-58801-33	1/4 X .035 X 19	AMS-4083 65S-T6 30B/1979	AN819-4Z	2	AN818-4D	2
191-58801-35	1/4 X .035 X 20-1/8	AMS-4083 65S-T6 30B/1979	AN819-4Z	2	AN818-4D	2
191-58801-41	1/4 X .035 X 20-1/2	AMS-4083 65S-T6 30B/1979	AN819-4Z	2	AN818-4D	2
191-58801-43	1/4 X .035 X 16-1/4	AMS-4083 65S-T6 30B/1979	AN819-4Z	2	AN818-4D	2
191-58801-49	1/4 X .035 X 20-1/4	AMS-4083 65S-T6 30B/1979	AN819-4Z	2	AN818-4D	2
191-58801-5	1/4 X .035 X 4-11/16	AMS-4083 65S-T6 30B/1979	AN819-4Z	2	AN818-4D	2
191-58801-53	1/4 X .035 X 10-1/8	AMS-4083 65S-T6 30B/1979	AN819-4Z	2	AN818-4D	2
191-58801-55	3/8 X .049 X 4	AMS-4083 65S-T6 30B/1979	AN819-6Z	2	AN818-6D	2
191-58801-57	1/4 X .035 X 23	AMS-4083 65S-T6 30B/1983	AN819-4Z	2	AN818-4D	2

PART NUMBER	SIZE, GAUGE, STRAIGHT LENGTH	MATERIAL SPEC.	FITTINGS			
			SLEEVE	QTY	NUT	QTY
	HYDRAULIC SYSTEM (CONTINUED)					
191-58801-59	1/4 X .035 X 22-7/8	AMS-4083 65S-T6 30B/1979	AN819-4Z	2	AN818-4D	2
191-58801-61	1/4 X.035 X 15-13/16	AMS-4083 65S-T6 30B/1979	AN819-4Z	2	AN818-4D	2
191-58801-7	1/4 X .035 X 14-1/2	AMS-4083 65S-T6 30B/1979	AN819-4Z	2	AN818-4D	2
191-58801-9	1/4 X .035 X 17	AMS-4083 65S-T6 30B/1979	AN819-4Z	2	AN818-4D	2
191-58803-1057	3/8 X .028 X 23	MIL-T-6845 18-8 30B/1977	AN819-6	2	AN818-6	2
191-58803-13	1/4 X .035 X 17	AMS-4083 65S-T6 30B/1979	AN819-4Z	2	AN818-4D	2
191-58803-15	1/4 X .035 X 19	AMS-4083 65S-T6 30B/1979	AN819-4Z	2	AN818-4D	2
191-58803-17	1/4 X .035 X 15-1/4	AMS-4083 65S-T6 30B/1979	AN819-4Z	2	AN818-4D	2
191-58803-19	1/4 X .035 X 18	AMS-4083 65S-T6 30B/1979	AN819-4Z	2	AN818-4D	2
191-58803-21	1/4 X .035 X 11	AMS-4083 65S-T6 30B/1979	AN819-4Z	2	AN818-4D	2
191-58803-23	1/4 X .035 X 23	AMS-4083 65S-T6 30B/1979	AN819-4Z	2	AN818-4D	2
191-58803-25	1/4 X .035 X 51	AMS-4083 65S-T6 30B/1979	AN819-4Z	2	AN818-4D	2
191-58803-27	1/4 X .035 X 15-3/8	AMS-4083 65S-T6 30B/1979	AN819-4Z	2	AN818-4D	2
191-58803-29	1/4 X .035 X 39	AMS-4083 65S-T6 30B/1979	AN819-4Z	2	AN818-4D	2
191-58803-3	1/4 X .035 X 22-1/2	AMS-4080 65S-T6 30B/1979	AN819-4Z	2	AN818-4D	2
191-58803-31	1/4 X .035 X 12	AMS-4083 65S-T6 30B/1979	AN819-4Z	2	AN818-4D	2
191-58803-33	1/4 X .035 X 34	AMS-4083 65S-T6 30B/1979	AN819-4Z	2	AN818-4D	2
191-58803-35	1/4 X .035 X 35	AMS-4083 65S-T6 30B/1979	AN819-4Z	2	AN818-4D	2
191-58803-37	1/4 X .035 X 35	AMS-4083 65S-T6 30B/1979	AN819-4Z	2	AN818-4D	2
191-58803-39	1/4 X .035 X 35	AMS-4083 65S-T6 30B/1979	AN819-4Z	2	AN818-4D	2

PART NUMBER	SIZE, GAUGE, STRAIGHT LENGTH	MATERIAL SPEC.	FITTINGS			
			SLEEVE	QTY	NUT	QTY
	HYDRAULIC SYSTEM (CONTINUED)					
191-58803-41	1/4 X .035 X 34	AMS-4080 65S-T6 30B/1979	AN819-4Z	2	AN818-4D	2
191-58803-43	1/4 X .035 X 44	AMS-4083 65S-T6 30B/1979	AN819-4Z	2	AN818-4D	2
191-58803-45	1/4 X .035 X 39	AMS-4083 65S-T6 30B/1979	AN819-4Z	2	AN818-4D	2
191-58803-47	1/4 X .035 X 39	AMS-4083 65S-T6 30B/1979	AN819-4Z	2	AN818-4D	2
191-58803-49	1/4 X .035 X 35	AMS-4083 65S-T6 30B/1979	AN819-4Z	2	AN818-4D	2
191-58803-5	1/4 X .035 X 4-7/8	AMS-4083 65S-T6 30B/1979	AN819-4Z	2	AN818-4D	2
191-58803-51	3/8 X .049 X 10-1/4	AMS-4083 65S-T6 30B/1983	AN819-6Z	2	AN818-6D	2
191-58803-53	3/8 X .049 X 9	AMS-4083 65S-T6 30B/1983	AN819-6Z	2	AN818-6D	2
191-58803-55	3/8 X .049 X 14	AMS-4083 65S-T6 30B/1983	AN819-6Z	2	AN818-6D	2
191-58803-57	3/8 X .049 X 23	AMS-4083 65S-T6 30B/1983	AN819-6Z	2	AN818-6D	2
191-58803-59	1/2 X .065 X 25-9/16	AMS-4083 65S-T6 30B/2033	AN819-8Z	2	AN818-8D	2
191-58803-7	1/4 X .035 X 5-1/2	AMS-4083 65S-T6 30B/1979	AN819-4Z	2	AN818-4D	2
191-58803-9	1/4 X .035 X 14-1/2	AMS-4083 65S-T6 30B/1979	AN819-4Z	2	AN818-4D	2
191-58805-1023	3/8 X .028 X 38-1/4	MIL-T-6845 18-8 30B/1977	AN819-6	2	AN818-6	2
191-58805-1025	3/8 X .028 X 32-3/16	MIL-T-6845 18-8 30B/1977	AN819-6	2	AN818-6	2
191-58805-11	1/4 X .035 X 34-1/4	AMS-4083 65S-T6 30B/1979	AN819-4Z	2	AN818-4D	2
191-58805-13	1/4 X .035 X 34-3/4	AMS-4083 65S-T6 30B/1979	AN819-4Z	2	AN818-4D	2
191-58805-15	1/4 X .035 X 28-3/8	AMS-4083 65S-T6 30B/1979	AN819-4Z	2	AN818-4D	2
191-58805-17	1/4 X .035 X 32	AMS-4083 65S-T6 30B/1979	AN819-4Z	2	AN818-4D	2
191-58805-19	1/4 X .035 X 29-3/8	AMS-4083 65S-T6 30B/1979	AN819-4Z	2	AN818-4D	2

PART NUMBER	SIZE, GAUGE, STRAIGHT LENGTH	MATERIAL SPEC.	FITTINGS			
			SLEEVE	QTY	NUT	QTY
	HYDRAULIC SYSTEM (CONTINUED)					
191-58805-21	1/4 X .035 X 25-5/8	AMS-4083 65S-T6 30B/1979	AN819-4Z	2	AN818-4D	2
191-58805-23	3/8 X .049 X 38-1/4	AMS-4083 65S-T6 30B/1983	AN819-4Z	2	AN818-4D	2
191-58805-25	3/8 X .049 X 32-3/16	AMS-4083 65S-T6 30B/1983	AN819-6Z	2	AN818-6D	2
191-58805-29	1/2 X .065 X 30-1/16	AMS-4083 65S-T6 30B/2033	AN819-8Z	2	AN818-8D	2
191-58805-3	1/4 X .035 X 39-1/2	AMS-4083 65S-T6 30B/1979	AN819-4Z	2	AN819-4D	2
191-58805-31	1/2 X .065 X 16-1/2	AMS-4080 65S-T6 30B/2033	AN819-8Z	2	AN818-8D	2
191-58805-5	1/4 X.035 X 39-15/16	AMS-4083 65S-T6 30B/1979	AN819-4Z	2	AN818-4D	2
191-58805-7	1/4 X .035 X 37-3/4	AMS-4083 65S-T6 30B/1979	AN819-4Z	2	AN818-4D	2
191-58805-9	1/4 X .035 X 39-1/2	AMS-4083 65S-T6 30B/1979	AN819-4Z	2	AN818-4D	2
191-58807-1009	3/8 X .028 X 10-1/16	AMS-5566 18-8 30B/1977	AN819-6	2	AN818-6	2
191-58807-1011	3/8 X .028 X 63-7/16	AMS-5566 18-8 30B/1977	AN819-6	2	AN818-6	2
191-58807-1013	3/8 X .028 X 62-5/8	AMS-5566 18-8 30B/1977	AN819-6	2	AN818-6	2
191-58807-1019	3/8 X .028 X 54-1/8	AMS-5566 18-8 30B/1977	AN819-6	2	AN818-6	2
191-58807-1021	3/8 X .028 X 6-5/16	AMS-5566 18-8 30B/1977	AN819-6	2	AN818-6	2
191-58807-1023	3/8 X .028 X 10-1/2	AMS-5566 18-8 30B/1977	AN819-6	2	AN818-6	2
191-58807-1025	3/8 X .028 X 25-1/2	AMS-5566 18-8 30B/1977	AN819-6	2	AN818-6	2
191-58807-1027	3/8 X .028 X 27-1/4	AMS-5566 18-8 30B/1977	AN819-6	2	AN818-6	2
191-58807-1029	3/8 X .028 X 26-3/4	AMS-5566 18-8 30B/1977	AN819-6	2	AN818-6	2
191-58807-1031	3/8 X.028 X 27-15/16	AMS-5566 18-8 30B/1977	AN819-6	2	AN818-6	2
191-58807-1035	3/8 X .028 X 8-5/16	AMS-5566 18-8 30B/1977	AN819-6	2	AN818-6	2

PART NUMBER	SIZE, GAUGE, STRAIGHT LENGTH	MATERIAL SPEC.	FITTINGS			
			SLEEVE	QTY	NUT	QTY
	HYDRAULIC SYSTEM (CONTINUED)					
191-58807-11	3/8 X .049 X 63-7/16	AMS-4083 65S-T6 30B/1983	AN819-6Z	2	AN818-6D	2
191-58807-13	3/8 X .049 X 62-5/8	AMS-4083 65S-T6 30B/1983	AN819-6Z	2	AN818-6D	2
191-58807-17	3/8 X .049 X 25-1/2	AMS-4083 65S-T6 30B/1983	AN819-6Z	2	AN818-6D	2
191-58807-19	3/8 X .049 X 54-1/8	AMS-4083 65S-T6 30B/1983	AN819-6Z	2	AN818-6D	2
191-58807-1903	3/8 X .028 X 17	AMS-5566 18-8 30B/1977	AN819-6	2	AN818-6	2
191-58807-1905	3/8 X .028 X 6	AMS-5566 18-8 30B/1977	AN819-6	2	AN818-6	2
191-58807-1907	3/8 X .028 X 36	AMS-5566 18-8 30B/1977	AN819-6	2	AN818-6	2
191-58807-1915	3/8 X .028 X 17	AMS-5566 18-8 30B/1977	AN819-6	2	AN818-6	2
191-58807-1950	3/8 X .028 X 65	AMS-5566 18-8 30B/1977	AN819-6	2	AN818-6	2
191-58807-1954	3/8 X .028 X 34	AMS-5566 18-8 30B/1977	AN819-6	2	AN818-6	2
191-58807-1985	3/8 X .028 X 28	AMS-5566 18-8 30B/1977	AN819-6	2	AN818-6	2
191-58807-21	3/8 X .049 X 6-5/16	AMS-4083 65S-T6 30B/1983	AN819-6Z	2	AN818-6D	2
191-58807-23	3/8 X .049 X 10-1/2	AMS-4083 65S-T6 30B/1983	AN819-6Z	2	AN818-6D	2
191-58807-25	3/8 X .049 X 25-1/2	AMS-4083 65S-T6 30B/1983	AN819-6Z	2	AN818-6D	2
191-58807-27	3/8 X .049 X 27-1/4	AMS-4083 65S-T6 30B/1983	AN819-6Z	2	AN818-6D	2
191-58807-29	3/8 X .049 X 26-3/4	AMS-4083 65S-T6 30B/1983	AN819-6Z	2	AN818-6D	2
191-58807-3	3/8 X .049 X 13-7/8	AMS-4083 65S-T6 30B/1983	AN819-6Z	2	AN818-6D	2
191-58807-31	3/8 X.049 X 27-15/16	AMS-4083 65S-T6 30B/1983	AN819-6Z	2	AN818-6D	2
191-58807-35	3/8 X .049 X 8-5/16	AMS-4083 65S-T6 30B/1983	AN819-6Z	2	AN819-6D	2
191-58807-39	1/4 X .035 X 31-1/4	AMS-4083 65S-T6 30B/1979	AN819-4Z	2	AN818-4D	2

PART NUMBER	SIZE, GAUGE, STRAIGHT LENGTH	MATERIAL SPEC.	FITTINGS			
			SLEEVE	QTY	NUT	QTY
	HYDRAULIC SYSTEM (CONTINUED)					
191-58807-41	1/4 X .035 X 31	AMS-4083 65S-T6 30B/1979	AN819-4Z	2	AN818-4D	2
191-58807-5	3/8 X .049 X 13-5/8	AMS-4083 65S-T6 30B/1983	AN819-6Z	2	AN818-6D	2
191-58807-59	1/4 X .035 X 7-11/16	AMS-4083 65S-T6 30B/1979	AN819-4Z	2	AN818-4D	2
191-58807-63	1/4 X .035 X 5-13/16	AMS-4083 65S-T6 30B/1979	AN819-4Z	2	AN818-4D	2
191-58807-65	1/4 X .035 X 8	AMS-4083 65S-T6 30B/1979	AN819-4Z	2	AN818-4D	2
191-58807-7	3/8 X .049 X 19-1/8	AMS-4083 65S-T6 30B/1983	AN819-6Z	2	AN818-6D	2
191-58807-71	1/4 X .035 X 8-1/4	AMS-4083 65S-T6 30B/1979	AN819-4Z	2	AN818-4D	2
191-58807-73	1/4 X .035 X 7-7/8	AMS-4083 65S-T6 30B/1979	AN819-4Z	2	AN818-4D	2
191-58807-75	1/4 X .035 X 8-3/8	AMS-4083 65S-T6 30B/1979	AN819-4Z	2	AN818-4D	2
191-58807-77	1/4 X .035 X 7-13/16	AMS-4083 65S-T6 30B/1979	AN819-4Z	2	AN818-4D	2
191-58807-79	1/4 X .035 X 13-7/8	AMS-4083 65S-T6 30B/1979	AN819-4Z	2	AN818-4D	2
191-58807-81	1/4 X .035 X 14	AMS-4083 65S-T6 30B/1979	AN819-4Z	2	AN818-4D	2
191-58807-9	3/8 X .049 X 10-1/16	AMS-4083 65S-T6 30B/1983	AN819-6Z	2	AN818-6D	2
191-58807-915	3/8 X .049 X 17	AMS-4083 65S-T6 30B/1983	AN819-6Z	2	AN818-6D	2
191-58807-950	3/8 X .049 X 65	AMS-4083 65S-T6 30B/1983	AN819-6Z	2	AN818-6D	2
191-58807-952	3/8 X .049 X 34	AMS-4083 65S-T6 30B/1983	AN819-6Z	2	AN818-6D	2
191-58807-954	3/8 X .049 X 34	AMS-4083 65S-T6 30B/1983	AN819-6Z	2	AN818-6D	2
191-58807-956	3/8 X .049 X 40	AMS-4083 65S-T6 30B/1983	AN819-6Z	2	AN818-6D	2
191-58807-958	3/8 X .049 X 42	AMS-4083 65S-T6 30B/1983	AN819-6Z	2	AN818-6D	2
191-58807-985	3/8 X .049 X 28	AMS-4083 65S-T6 30B/1983	AN819-6Z	2	AN818-6D	2

PART NUMBER	SIZE, GAUGE, STRAIGHT LENGTH	MATERIAL SPEC.	FITTINGS			
			SLEEVE	QTY	NUT	QTY
	HYDRAULIC SYSTEM (CONTINUED)					
191-58809-27	1/4 X .035 X 6-3/4	AMS-4083 65S-T6 30B/1979	AN819-4Z	2	AN818-4D	2
191-58809-29	1/4 X .035 X 9	AMS-4083 65S-T6 30B/1979	AN819-4Z	2	AN818-4D	2
191-58809-31	1/4 X .035 X 16-3/8	AMS-4083 65S-T6 30B/1979	AN819-4Z	2	AN818-4D	2
191-58809-33	1/4 X .035 X 13	AMS-4083 65S-T6 30B/1979	AN819-4Z	2	AN818-4D	2
191-58811-11	1/4 X .035 X 18	AMS-4083 65S-T6 30B/1979	AN819-4Z	2	AN818-4D	2
191-58811-7	1/4 X .035 X 12-1/8	AMS-4083 65S-T6 30B/1979	AN819-4Z	2	AN818-4D	2
191-58811-9	1/4 X .035 X 16-3/8	AMS-4083 65S-T6 30B/1979	AN819-4Z	2	AN818-4D	2
191-58813-1007	3/8 X .028 X 36	MIL-T-6845 18-8 30B/1977	AN819-6	2	AN818-6	2
191-58813-11	1/4 X .035 X 6 1/16	AMS-4083 65S-T6 30B/1979	AN819-4Z	2	AN818-4D	2
191-58813-13	1/4 X .035 X 9	AMS-4083 65S-T6 30B/1979	AN819-4Z	2	AN818-4D	2
191-58813-15	1/4 X .035 X 13 7/8	AMS-4083 65S-T6 30B/1979	AN819-4Z	2	AN818-4D	2
191-58813-17	1/4 X .035 X 3 1/2	AMS-4083 65S-T6 30B/1979	AN819-4Z	2	AN818-4D	2
191-58813-3	3/8 X .049 X 22 3/4	AMS-4083 65S-T6 30B/1983	AN819-6Z	2	AN818-6D	2
191-58813-5	1/2 X .065 X 17 1/4	AMS-4083 65S-T6 30B/2033	AN819-8Z	2	AN818-8D	2
191-58813-7	3/8 X .049 X 36	AMS-4083 65S-T6 30B/1983	AN819-6Z	2	AN818-6D	2
191-58813-9	1/4 X .065 X 16 1/4	AMS-4083 65S-T6	AN819-4Z	2	AN818-4D	2

PART NUMBER	SIZE, GAUGE, STRAIGHT LENGTH	MATERIAL SPEC.	FITTINGS			
			SLEEVE	QTY	NUT	QTY
	LANDING GEAR					
13-96055-103	1/4 X .020 X 70	MIL-T-6845 18-8 30B/1961				
13-96055-109	1/4 X .020 X 90	MIL-T-6845 18-8 30B/1961				
13-96055-111	1/4 X .020 X 65	MIL-T-6845 18-8 30B/1961				
13-96055-13	1/4 X .020 X 30	MIL-T-6845 18-8 30B/1961	AN819-4Z	2	AN818-4D	2
13-96055-15	1/4 X .020 X 103/4	MIL-T-6845 18-8 30B/1961	AN819-4Z	1	AN819-4D	1
13-96055-17	1/4 X .020 X 2	MIL-T-6845 18-8 30B/1961	AN819-4Z	1	AN819-4D	1
13-96055-5	1/4 X .020 X 36	MIL-T-6845 18-8 30B/1961	AN819-4Z	1	AN818-4D	1
151-58825-63	1/4 X .035 X 16 3/4	WW-T-787 57S-30B/695	AN819-4Z	2	AN818-4D	2
151-58825-65	1/4 X .020 X 15 1/4	MIL-T-6845 18-8 30B/1961	AN819-4	2	AN818-4	2

PART NUMBER	SIZE, GAUGE, STRAIGHT LENGTH	MATERIAL SPEC.	FITTINGS			
			SLEEVE	QTY	NUT	QTY
		OIL SYSTEM				
13A-65011-4	3/8 X .035 X 12	WW-T-787 57S-0 30B/551	AN819-6Z	2	AN818-6D	2
13A-65011-6	3/8 X .035 X 2-1/4	WW-T-787 57S-0 30B/551	AN819-6Z	2	AN818-6D	2
13A-65011-8	3/8 X .035 X 16-1/2	MIL-T-6845 18-8 30B/1967	AN819-6	2	AN818-6	2
172-47802-19	3/8 X.035 X 16-11/16	WW-T-787 57S-0 30B/551	AN819-6Z	1	AN818-6D	1
172-47802-950	5/8 X .035 X 8	WW-T-787 57S-0 30B/981	AN819-10Z	1	AN818-10D	1

PART NUMBER	SIZE, GAUGE, STRAIGHT LENGTH	MATERIAL SPEC.	FITTINGS			
			SLEEVE	QTY	NUT	QTY
	OXYGEN SYSTEM					
151-73318-101	5/16 X .035 X 8-1/4	WW-T-787 57S-0 30B/963	44A25450	2	AN818-5D	2
151-73318-103	5/16 X.035 X36-11/16	WW-T-787 57S-0 30B/963	44A25450	2	AN818-5D	2
151-73318-105	5/16 X .035 X 38-3/8	WW-T-787 57S-0 30B/963	44A25450	2	AN818-5D	2
151-73318-107	5/16 X .035 X 19-5/8	WW-T-787 57S-0 30B/963	44A25450	2	AN818-5D	2
151-73318-117	5/16 X .035 X 32	WW-T-787 57S-0 30B/963	44A25450	2	AN818-5D	2
151-73318-119	5/16 X.035 X 11-5/16	WW-T-787 57S-0 30B/963	44A25450	2	AN818-5D	2
151-73318-121	5/16 X.035 X 10-3/16	WW-T-787 57S-0 30B/963	44A25450	2	AN818-5D	2
151-73318-3	5/16 X .035 X 10-1/4	WW-T-787 57S-0 30B/963	44A25450	2	AN818-5D	2
151-73318-7	5/16 X .035 X 5	WW-T-787 57S-0 30B/963	44A25450	4	AN818-5D	4
151-73318-951	5/16 X .035 X 10-3/4	WW-T-787 57S-0 30B/963	44A25450	2	AN818-5D	2
151-73318-953	5/16 X .035 X 24	WW-T-787 57S-0 30B/963	44A25450	2	AN818-5D	2
151-73318-957	5/16 X.035 X 10-7/16	WW-T-787 57S-0 30B/963	44A25450	2	AN818-5D	2
151-73318-959	5/16 X .035 X 5-1/2	WW-T-787 57S-0 30B/963	44A25450	2	AN818-5D	2
151-73318-961	5/16 X .035 X 10	WW-T-787 57S-0 30B/963	44A25450	2	AN818-5D	2
151-73318-963	5/16 X .035 X 4-1/4	WW-T-787 57S-0 30B/963	44A25450	2	AN818-5D	2
151-73318-965	5/16 X.035 X 40-1/16	WW-T-787 57S-0 30B/963	44A25450	2	AN818-5D	2
151-73318-967	5/16 X .035 X 20	WW-T-787 57S-0 30B/963	44A25450	2	AN818-5D	2
151-73318-969	5/16 X .035 X 9	WW-T-787 57S-0 30B/963	44A25450	2	AN818-5D	2
151-73318-97	5/16 X .35 X 4-1/2	WW-T-787 57S-0 30B/963	44A25450	2	AN818-5D	2
151-73318-99	5/16 X .035 X 6-3/4	WW-T-787 57S-0 30B/963	44A25450	2	AN818-5D	2

PART NUMBER	SIZE, GAUGE, STRAIGHT LENGTH	MATERIAL SPEC.	FITTINGS			
			SLEEVE	QTY	NUT	QTY
	PITOT STATIC SYSTEM					
13-51015-15	1/4 X .035 X 26	WW-T-789 65S-T6 30B/1979	AN819-4Z	2	AN818-4D	2
13-51015-17	1/4 X .035 X 43	WW-T-789 65S-T6 30B/1979	AN819-4Z	2	AN818-4D	2
13-51015-19	1/4 X .035 X 30	WW-T-789 65S-T6 30B/1979	AN819-4Z	2	AN818-4D	2
13-51015-21	1/4 X .035 X 35	WW-T-789 65S-T6 30B/1979	AN819-4Z	2	AN818-4D	2
13-51015-23	1/4 X .035 X 34	WW-T-789 65S-T6 30B/1979	AN819-4Z	2	AN818-4D	2
13A-51014-3	1/4 X .035 X 67	WW-T-789 65S-T6 30B/1979	AN819-4Z	2	AN818-4D	2
13A-51014-5	1/4 X .035 X 38	WW-T-789 65S-T6 30B/1979	AN819-4Z	2	AN818-4D	2
161-51801-53	1/4 X .035 X 24-9/16	WW-T-787 57S-0 30B/695	AN819-4Z	2	AN818-4D	2
161-51801-67	1/4 X .035 X 32-3/8	WW-T-787 57S-0 30B/695	AN819-4Z	2	AN818-4D	2
161-51801-950	1/4 X .035 X 88	WW-T-787 57S-0 30B/695	AN819-4Z	2	AN818-4D	2
161-51801-951	1/4 X .035 X 55	WW-T-787 57S-0 30B/695	AN819-4Z	2	AN818-4D	2
161-51801-952	1/4 X .035 X 130	WW-T-787 57S-0 30B/695	AN819-4Z	2	AN818-4D	2
161-51801-954	1/4 X .035 X 120	WW-T-787 57S-0 30B/695	AN819-4Z	2	AN818-4D	2
161-51801-955	1/4 X .035 X 23	WW-T-787 57S-0 30B/695	AN819-4Z	2	AN818-4D	2
161-51801-962	1/4 X .035 X 15	WW-T-787 57S-0 30B/695	AN819-4Z	2	AN818-4D	2
161-51801-979	1/4 X .035 X 130	WW-T-787 57S-0 30B/695	AN819-4Z	2	AN818-4D	2
161-51801-983	1/4 X .035 X	WW-T-787 57S-0 30B/695	AN819-4Z	2	AN818-4D	2
161-51801-985	1/4 X .035 X	WW-T-787 57S-0 30B/695	AN819-4Z	2	AN818-4D	2
165-51056-3	1/4 X .035 X 40-1/8	WW-T-787 57S-0 30B/695	AN819-4Z	2	AN818-4D	2
165-51056-5	1/4 X .035 X 38-1/2	WW-T-787 57S-0 30B/695	AN819-4Z	2	AN818-4D	2

PART NUMBER	SIZE, GAUGE, STRAIGHT LENGTH	MATERIAL SPEC.	FITTINGS			
			SLEEVE	QTY	NUT	QTY
	PITOT STATIC SYSTEM (CONTINUED)					
165-51801-956	1/4 X .035 X 104	WW-T-787 57S-0 30B/695	AN819-4Z	2	AN818-4D	2
165-51801-981	1/4 X .035 X 104	WW-T-787 57S-0 30B/695	AN819-4Z	2	AN818-4D	2
170-51801-33	1/4 X .035 X 8-3/16	WW-T-787 57S-0 30B/695	AN819-4Z	2	AN818-4D	2
170-51801-39	1/4 X .035 X 3-3/16	WW-T-787 57S-0 30B/695	AN819-4Z	2	AN818-4D	2
170-51801-41	1/4 X .035 X 3-11/16	WW-T-787 57S-0 30B/695	AN819-4Z	2	AN818-4Z	2
170-51801-55	1/4 X .035 X 51-3/4	WW-T-787 57S-0 30B/695	AN819-4Z	2	AN818-4D	2
170-51801-57	1/4 X .035 X 23	WW-T-787 57S-0 30B/695	AN819-4Z	2	AN818-4D	2
170-51801-59	1/4 X .035 X 12	WW-T-787 57S-0 30B/695	AN819-4Z	2	AN818-4D	2
170-51801-61	1/4 X .035 X 39	WW-T-787 57S-0 30B/695	AN819-4Z	2	AN818-4D	2
170-51801-63	1/4 X .035 X 22-3/4	WW-T-787 57S-0 30B/695	AN819-4Z	2	AN818-4D	2
170-51801-65	1/4 X .035 X 22	WW-T-787 57S-0 30B/695	AN819-4Z	2	AN818-4D	2
170-51801-67	1/4 X .035 X 18-5/8	WW-T-787 57S-0 30B/695	AN819-4Z	2	AN818-4D	2
170-51801-961	1/4 X .035 X 12	WW-T-787 57S-0 30B/695	AN819-4Z	2	AN818-4D	2
170-51801-963	1/4 X .035 X 16	WW-T-787 57S-0 30B/695	AN819-4Z	2	AN818-4D	2
170-51801-983	1/4 X .035 X 38	WW-T-787 57S-0 30B/695	AN819-4Z	2	AN818-4D	2
170-51801-987	1/4 X .035 X 3-3/16	WW-T-787 57S-0 30B/695	AN819-4Z	2	AN818-4D	2

PART 5

NUMERICAL PART LIST

PART NUMBER	FIGURE AND INDEX NUMBER	QUANTITY
BALL - .1878 DIA	307 -	5
BALL - 3/16-IN. DIA	116 -	2
CHAIN - BRASS 5-IN.	319 - 6	
CHAIN - BRASS 6-IN.	319 -16	
	319 -37	
	319 -61	
SAFETY-CHAIN - NO.2	83 -40	1
SCREW - PHILLIPS	288 -	2
SCREW - TYPE Z	142 -	2
SET-SCREW-1/4-20X1/4	115 -26	
	116 -35	2
SET-SCREW-4-40X5/16	100 -	
A-Q5R	112 -	
A-1954-1	128 -	
A-4255A5	157 - 3	
	158 -42	2
A-4613	140 -	1
A-4902	157 -	
	158 -41	2
A-5299-24	140 -	2
AAF24975	157 -	1
AAF41A4104	93 -	1
AAF83-5A	71 -17	4
AAF84-5A	71 -	28
AAF85-11	71 -27	2
AA32516-L-2	117 - 1	1
AC-134A5-5A	146 - 8	1
AC10004	292 -	
AC1275	321 - 1	
AF20-27	127 -18	2
AF20-29	127 -14	1
AF41	156 -	2
AF422350-2	297 -	
AF422350-3	297 -	
AF422350-4	297 -	
AF44A13841	247 -37	1
AF45B7509	71 -67	1
AF46A1650-4	82 -42	1
AF85-23	80 -23	2
AF85-24	80 -24	2
AF865-1	53 - 5	1
AF934-107	249 - 7	5
AF934-11	253 -	7
AF934-11L	253 -21	1
AF934-111	249 -18	5
AF934-116	244 - 5	5
AF934-14	244 -	1
AF934-140	248 -36	6
AF934-15	248 -46	18
AF934-19	258 -68	4
AF934-2	244 -19	8
AF934-27	265 -28	4
AF934-29	255 - 7	2
AF934-3	265 -32	8
AF934-6	246 -	4
AF934-7	256 -21	6
AF934-89	257 -41	12
AF934-92	256 -14	2
AF955-3	71 -	20
AGC-1	153 -	
	162 -	15
AGC-1-1/2	157 -	
	162 -	5
AGC-1/2	162 -	
	293A-26	8
AGC-1/8	293A-27	2
AGC-2	292 -	
	293A-25	5

PART NUMBER	FIGURE AND INDEX NUMBER	QUANTITY
AGC-5	292 -	
	296 - 6	4
AJW4-40	109 -	
	109 -	16
AMP32051	263 -	
AN-I-14	82 -	1
AN-N6	306 -15	1
AN-N9	295 - 2	
	306 -16	2
AN10-26A	265 -10	2
AN10116	102 -16	4
AN101226	102 -14	2
AN101230	102 -	2
AN101325	104 -33	2
AN101329	102 - 9	2
AN115-8	122 -14	1
AN12H17	298 - 2	6
AN155-16L	128 -13	6
AN155-16S	86 -28	7
AN155-8S	35 -49	10
AN155-80L	110 -10	5
AN161-8LS	68 -	3
AN161-8RS	35 -50	4
AN162-3RL	128 -	2
AN165-125RL	85 -29	1
AN165-16RL	128 - 9	2
AN173-10	30 -60	2
AN173-11A	71 -	8
AN173-12	30 -59	1
AN173-12A	70 -24	2
AN173-13A	70 -	2
AN173-14A	70 -25	1
AN173-15A	70 -	3
AN173-7A	136 -11	1
AN174-10	70 -	1
AN174-11	86 - 5	2
AN174-11A	27 -43	2
AN174-12	125 -	2
AN174-12A	28 -30	15
AN174-13	26A- 6	2
AN174-13A	27 -42	4
AN174-14	129 -	2
AN174-14A	27 -41	9
AN174-15	125 -14	1
AN174-15A	6 -24	5
AN174-16A	125 -12	1
AN174-17A	136 -15	3
AN174-20A	131 -19	3
AN174-23A	128 - 5	3
AN174-24	125 -44	1
AN174-24A	128 -	1
AN174-27	116 - 4	2
AN174-37A	256 -	1
AN174-44A	26 -17	2
AN174-5A	131 -21	3
AN174-6A	134 -36	1
AN174-7A	29 -	4
AN174H37A	241 - 3	2
AN174H5A	26A-17	2
AN175-13A	29 -23	2
AN175-15A	29 -26	2
AN175-17	26A- 9	2
AN175-20	126 -16	1
AN175-20A	29 - 8	2
AN175-31	26A-33	4
AN175-33	26A- 4	3
AN175-60A	132 -21	1
AN175H26	80 -	2

PART NUMBER	FIGURE AND INDEX NUMBER	QUANTITY
AN175H30A	133 - 6	1
AN176-12A	128 -	2
AN176-15A	128 -	2
AN176-21A	29 - 9	3
AN177-11A	56 -	6
AN177-12A	56 -	10
AN177-13A	56 -42	8
AN179-31	85 -37	REF
AN179-31	81 - 5	1
AN180-25	26 -25	1
AN200KP3	131 - 4	5
AN200KP4	28 -	
	28 -	9
AN200KP5	133 - 4	2
AN200KS3L	100 -43	2
AN200KS4	28 -	9
AN200K3	128 -	8
AN200K3L	263 -	
AN200K4	127 - 4	6
AN200K6	129 -	4
AN201KP10A	39A-	5
AN201KP3A	133 - 5	8
AN201KP5A	132 -19	2
AN201KP6A	131 -25	1
AN201KP8A	243 -14	2
AN201K10A	127 - 8	2
AN201K12A	126 -	2
AN201K4A	127 - 6	1
AN201K6A	131 -23	1
AN201PK8A	39A-	1
AN206DS3	125 -10	1
AN206DS4	126 -14	3
AN207DP3	116 -16	1
AN207DP4	125 - 9	1
AN207DP6	9 -	4
AN207D4	126 - 6	1
AN207D6	137 - 2	1
AN210-1A	35 -39	31
AN210-1B	37 -44	17
AN210-2A	37 -41	27
AN210-2B	17 - 2	23
AN210-3A	68 -35	1
AN210-3B	38 -25	3
AN210-4A	77 -	2
AN210-4B	135 -17	7
AN210-5B	135 -26	3
AN218-4	67 -34	6
AN218P4	112 -	1
AN219-2	121 -23	1
AN22-14	161 -19	1
AN227-10	160 -	10
AN227-10-10	121 -	3
AN227-11	153 -	9
AN227-12	153 -	9
AN227-13	153 -	9
AN227-14	153 -	9
AN227-22L	53 -27	1
AN227-4L	62 -	4
AN227-6	120 -	36
AN227-6B	307 -	2
AN227-7	120 -	36
AN227-7B	307 -21	2
AN227-8	55 - 2	21
AN227-9	120 -	15
AN229-1BL40	121 -	1
AN229-2DL252-1	307 -	2
AN23-10	55 -36	14
AN23-10A	118 -30	4

PART NUMBER	FIGURE AND INDEX NUMBER	QUANTITY
AN23-11	262 -19	12
AN23-11A	118 -40	4
AN23-12	55 -35	15
AN23-13	86 -25	13
AN23-14	81 - 6	1
AN23-15	79 -44	11
AN23-15A	97 -17	2
AN23-16	81 - 7	1
AN23-18	154 -	1
AN23-19	261 -15	2
AN23-21	82 -34	1
AN23-24A	118 -45	2
AN23-25A	118 -44	6
AN23-30A	124 -17	2
AN23-31	161 -22	1
AN23-34	135 - 8	1
AN23-36A	92 -29	2
AN23-62A	113 -	
AN23-8	116 -	1
AN23-9	69 -28	5
AN23A27	4 -	16
AN230B2	120 -	2
AN24-10	118 -19	4
AN24-11A	120 -11	4
AN24-12A	305 -10	2
AN24-13A	38 -64	6
AN24-14	91 -10	1
AN24-15	90 -60	2
AN24-15A	129 -10	4
AN24-16	174 - 3	1
AN24-17	86 -26	2
AN24-19	29 -62	1
AN24-20	29 -60	1
AN24-25H	100 -19	1
AN24-28A	118 -	2
AN24-30	30 -73	REF
AN24-30	26 -26	1
AN24-32	30 -74	REF
AN24-32	26 -27	1
AN25-16A	119 -28	1
AN25-18	238 -17	2
AN25-23	110 - 8	4
AN25-25	26 -19	1
AN25-31	311 - 6	4
AN25-32	311 -34	2
AN253-2-106	246 - 9	4
AN253-2-200	307 -	2
AN253-2-223	77 -	2
AN253-2-237	63 -	1
AN253-2-245	62 -	1
AN253-2-4-875	40 -	2
AN253-2-506	184 -	1
AN253-2-525	184 - 4	1
AN253-3-675	177 -	1
AN253-5-1163	74 -	1
AN2552A3A	164 -52	2
AN26-15	188 -	1
AN26-16A	195 -	2
AN26-17A	195 -	2
AN26-18	188 -18	1
AN27-19	188 -27	1
AN27-23	188 -	1
AN27-38A	264 - 5	4
AN270B6	293 -44	1
AN3-10	68 -	13
AN3-10A	25 -	81
AN3-104	102 -	1
AN3-11	68 -	3

PART NUMBER	FIGURE AND INDEX NUMBER	QUANTITY
AN3-11A	35 -33	68
AN3-12A	27 -	43
AN3-13A	88 -31	REF
AN3-13A	71 -	49
AN3-14A	23 -47	59
AN3-15A	112 -13	20
AN3-16A	68 -	16
AN3-17A	130 -16	24
AN3-20A	34 -14	8
AN3-21A	40 -	16
AN3-22A	50 -23	34
AN3-23A	79 -43	4
AN3-24A	79 -35	2
AN3-25A	56 -52	3
AN3-27	273 -16	1
AN3-27A	38 -	4
AN3-3	185 - 6	11
AN3-3A	25 -	117
AN3-30	273 -	1
AN3-35A	71 -	
AN3-37A	71 -68	1
AN3-4	8 - 8	22
AN3-4A	14 - 3	606
AN3-45A	114 -37	2
AN3-46A	82 - 9	1
AN3-5	40 -	7
AN3-5A	36 -	AR
AN3-5A	8 -17	578
AN3-52	35 -13	1
AN3-6	63 -	12
AN3-6A	1 -	351
AN3-7	69 -42	7
AN3-7A	8 -19	185
AN3C4	139 -	5
AN3C5A	56 -30	42
AN3H15A	127 -15	1
AN3H3A	114 -29	3
AN3H4A	137 -	22
AN3H5A	36 -42	34
AN3H7A	303 - 9	3
AN3021-1	115 -36	
	116 -41	
	178 -12	
	178 -14	5
AN3021-2	140 -13	
	140 -73	
	180 -17	
	182 -20	6
AN3021-3	178 -11	3
AN3022-1	180 -	1
AN3022-15B	179 -15	1
AN3022-6	156 -	1
AN3022-7	156 -	1
AN3022-8	170 -	4
AN3025-2	160 -13	1
AN3027-1	178 - 9	
	178 -13	2
AN3027-3	140 -	
	178 - 8	
	178 -17	
	180 -13	4
AN3027-7	182 -17	1
AN3027-8	178 - 7	
	180 -12	
	180 -15	3
AN3033-7	171 -	1
AN3033-8	171 -	1
AN3034-3	157 -34	

PART NUMBER	FIGURE AND INDEX NUMBER	QUANTITY
AN3034-3	158 -45	2
AN3042-3	171 -12	1
AN3042-4	171 -	1
AN3054-10	156 -	1
AN3054-12	155 -	5
AN3054-16	156 -	5
AN3054-20	292 -	1
AN3054-20A	292 -	1
AN3054-4	155 -	12
AN3054-5	166 -	4
AN3054-6	106 -	9
AN3054-8	146 - 3	1
AN3057-10	168 -	5
AN3057-10A	152 -	18
AN3057-12	127 -17	5
AN3057-12A	155 -	22
AN3057-16	288 -	2
AN3057-16A	155 -	16
AN3057-20	172 -	1
AN3057-20A	155 -	12
AN3057-24A	293 -	2
AN3057-4	172 -	2
AN3057-4A	155 -	15
AN3057-6	162 -	14
AN3057-6A	155 -	53
AN3057-8	147 -16	4
AN3057-8A	152 -	14
AN3099-1	166 - 9	1
AN3099-7	161 -	1
AN310-10	26 -	1
AN310-12	298 -	6
AN310-3	16 -	76
AN310-4	26 -	78
AN310-5	26A-	23
AN310-5-1	139 -	1
AN310-6	57 -	10
AN310-7	26 -	8
AN310-8	70 -	5
AN310-9	67 -	2
AN310C4	250 -	1
AN3100-24-28S	293A-20	1
AN3100A14S1S	165 -68	1
AN3100A14S2S	165 -66	9
AN3100A14S6S	172 -	3
AN3100A16-12S	165 -50	1
AN3100A16-9P	155 -15A	1
AN3100A16S1P	172 -12	1
AN3100A16S1S	152 -	2
AN3100A18-1S	155 -15	1
AN3100A18-10S	170 -30	2
AN3100A18-12P	169 -48	1
AN3100A20-27S	155 -	2
AN3100A20-29P	161 -	1
AN3100A20-33S	162 -	2
AN3100A22-14S	155 -	1
AN3100A22-19S	164 -	1
AN3100A24-28S	293A-	1
AN3100A32-6P	172 - 2	1
AN3100A32-6S	164 -45	1
AN3100A32-8P	168 - 2	4
AN3100C24-28P	156 -14	2
AN3100C28-12P	156 -12	1
AN3100M20-16P	106 -	2
AN3100M20-27P	106 -	2
AN3100M28-11S	155 -	1
AN3100M28-12S	293 -	2
AN3100M32-7S	155 -	1
AN3100PR-24-28P	288 -	1

PART NUMBER	FIGURE AND INDEX NUMBER	QUANTITY
AN3100PR20-27P	288 -25	1
AN3100PR28-12P	288 -23	1
AN3101A14S2S	163 -23	8
AN3101A14S5S	165 -25	2
AN3101A16S1S	163 -	1
AN3101B18-1S	168 -21	4
AN3101B22-14P	166 -11	1
AN3102-14S2P	297 -35	4
AN3102A12S3S	175 -30	6
AN3102A20-27S	127 -21	REF
AN3102A20-27S	155 - 3	1
AN3102A22-19S	152 -	1
AN3102A22-24P	289 -	1
AN3102A28-11P	177 -31	2
AN3102A32-7P	177 -33	2
AN3102PR14S1P	289 -	1
AN3106-14S-5P	143 -	1
AN3106-14S5P	174 - 9	1
AN3106-16S1P	152 -	1
AN3106-22-24S	289 -	1
AN3106A10SL3S	155 -18	2
AN3106A18-12P	156 -22	1
AN3106B10SL3S	155 -	7
AN3106B10SL4S	161 -30	10
AN3106B12S3P	157 -	1
AN3106B12S3S	164 -36	7
AN3106B14S1P	165 -69	1
AN3106B14S2P	106 -	4
AN3106B14S2S	147 -21	REF
AN3106B14S2S	155 -17	11
AN3106B14S5P	293 -	1
AN3106B14S5S	155 -21	7
AN3106B14S6P	172 -37	1
AN3106B14S7S	163 -10	3
AN3106B14S9S	164 -37	1
AN3106B16-11S	153 -51	1
AN3106B16-12P	172 - 4	1
AN3106B16S1P	288 -29	2
AN3106B16S1S	164 -47	2
AN3106B16S8S	156 -19	1
AN3106B18-1P	155 -	1
AN3106B18-10S	161 - 9	1
AN3106B18-12P	167 -	1
AN3106B18-12S	168 -50	2
AN3106B18-5S	152 -18	1
AN3106B18-9S	152 -19	1
AN3106B20-14P	155 -	1
AN3106B20-18S	292 -48	1
AN3106B20-19S	172 -23	1
AN3106B20-27P	142 -14	3
AN3106B20-27S	160 -27	4
AN3106B20-29P	163 - 7	1
AN3106B20-29S	163 -15	1
AN3106B22-14S	155 - 5	1
AN3106B22-19S	293 -	1
AN3106B24-28P	293 - 2	1
AN3106B24-28S	156 -	4
AN3106B24-7S	160 - 3	1
AN3106B28-11S	155 - 7	2
AN3106B28-12S	156 -	2
AN3106B28-17P	292 -46	1
AN3106B32-13P	292 -	1
AN3106B32-13S	292 -32	1
AN3106B32-6P	164 -	1
AN3106B32-6S	164 -46	1
AN3106B32-7S	155 - 6	2
AN3106B36-8P	293 -	1
AN3106B36-8S	293 -	1

PART NUMBER	FIGURE AND INDEX NUMBER	QUANTITY
AN3106E18-4S	158 -	1
AN3106M20-16S	165 -57	1
AN3106M20-27S	165 -58	1
AN3106M22-14S	158 - 7	1
AN3106M24-28S	106 -	2
AN3106M28-11P	155 -11	1
AN3106M28-11S	106 -	2
AN3106M28-12P	293 -32	2
AN3106M32-7P	155 -10	1
AN3107-16S1S	289 -	1
AN3107B18-12S	168 -19	4
AN3107B20-29S	161 - 1	1
AN3108-20-27P	127 -19	1
AN3108A16S1S	164 -	1
AN3108A32-6S	164 -	1
AN3108B10SL3S	160 - 4	1
AN3108B10SL4S	163 - 8	2
AN3108B12S3S	164 -	1
AN3108B14S2S	164 -18	11
AN3108B14S5P	156 -20	1
AN3108B14S5S	162 -	3
AN3108B14S6P	172 -32	2
AN3108B14S7S	162 - 3	2
AN3108B14S9P	156 -21	1
AN3108B14S9S	164 -	1
AN3108B1436P	172 -	1
AN3108B16S1S	155 -24	2
AN3108B18-1P	296 -14	1
AN3108B20-15S	292 - 3	1
AN3108B20-18P	292 - 4	1
AN3108B20-27SX	160 -26	1
AN3108B20-29S	161 -29	1
AN3108B22-14S	293A-14	1
AN3108B22-14SW	293A-	1
AN3108B24-28S	292 -35	1
AN3108B32-13P	292 -44	1
AN3108B32-8S	158 - 5	2
AN3115-1	149 - 2	2
AN3121-313	140 -	22
AN3121R313	158 -	1
AN3122-1524	171 -11	2
AN3131-303	157 -	5
AN3133-311	161 -	2
AN3136R323	158 -44	3
AN3140-327	158 -	31
AN315-3	24 -	23
AN315-3L	164 -	1
AN315-3R	90 -	10
AN315-5R	273 -	2
AN315-6R	104 -35	4
AN315-640	98 -	2
AN315C4R	143 -19	4
AN3150-2	153 - 5	1
AN3155-25-100	158 -	1
AN3155-50-100	158 -	1
AN3157-2	140 -23	
	140 -48	
	182 - 4	3
AN3157-4	140 -12	
	140 -16	
	142 - 6	
	157 -22	
	178 -16	8
AN3157-6	140 -17	
	140 -	
	142 -19	7
AN3157-8	140 -	2
AN3158-1	173 -11	1

PART NUMBER	FIGURE AND INDEX NUMBER	QUANTITY
AN3158-2	173 -12	1
AN316-4	69 -27	10
AN316-4L	194 -	1
AN316-4R	6 -	59
AN316-428	124 -	2
AN316-5	112 -	7
AN316-5L	132 -	1
AN316-5R	90 -	20
AN316-6	134 -11	1
AN316-6L	129 -	2
AN316-6R	82 -31	17
AN316-7R	85 -	1
AN316-8	319 -	
AN316-8R	90 -	19
AN316C8R	110 -17	2
AN3160-10	179 - 7	1
AN3160-5	288 -16	1
AN3160P5	288 -	1
AN3161-P10	157 -	
	158 -55	
	172 -28	
	176 -12	
	183 - 3	
	183 - 4	
	184 - 7	13
AN3161-P15	153 -40	
	157 -	
	183 - 5	
	185 -16	7
AN3161-P20	183 - 6	
	184 - 8	
	185 -15	5
AN3161-P25	157 -	
	176 -13	
	183 - 7	
	184 - 9	4
AN3161-P35	157 -	
	184 -10	3
AN3161-P5	153 -	
	158 -	
	162 - 7	
	176 - 8	
	176 -14	
	176 -	
	183 - 2	
	184 - 6	
	184 -	34
AN3161P5	158 -56	
	176 -11	3
AN3168-12	273 -24	1
AN3169-1	161 -33	
	261 -26	2
AN3177-9	161 -40	
	166 - 6	2
AN3199-4	292 -	2
AN320-10	90 -	1
AN320-12	95 -	2
AN320-2	161 -	1
AN320-3	30 -	81
AN320-4	6 -	54
AN320-5	26 -	25
AN320-6	57 -	18
AN320-7	56 -	9
AN320-8	85 -	13
AN320-9	238 -	2
AN320C4	110 -	3
AN3203V30	140 -46	1
AN3210-1	161 -35	

PART NUMBER	FIGURE AND INDEX NUMBER	QUANTITY
AN3210-1	261 -27	2
AN3211-2	158 -49	1
AN3215-1	161 - 5	1
AN3216-1	112 -19	
	273 -23	2
AN3220-1	293A-18	1
AN3220-2	158 -	1
AN3220-3	182 -23	1
AN3221-1	178 - 5	1
AN3223-1	180 -	5
AN3224-2	180 -	5
AN3225-1	156 -	1
AN3226-1	178 - 4	
	178 -15	2
AN3227-1	180 -23	1
AN3227-3	170 -	
	180 -10	
	182 -18	3
AN3228-2	156 -	1
AN3229-1	170 -	1
AN3234-1	116 -23	
	125 -35	
	134 -28	
	173 -35	
	174 -	
	187 - 2	
	273 -15	24
AN3308-1	162 -13	
	164 -42	2
AN3310-1	152 -27	
	164 -43	2
AN3311-1	177 -19	1
AN3312-1	176 - 6	
	177 -29	
	293A-29	3
AN3316-1	185 -23	1
AN3350-1	164 - 1	
	164 -41	
	175 - 4	
	185 - 5	10
AN3350-2	176 - 4	
	177 -23	
	177 -24	3
AN3352-1	176 - 2	1
AN3353-1	152 - 6	
	176 -24	2
AN3370-1	153 -31	
	153 -	
	158 -	
	163 - 2	
	172 -18	
	175 -13	8
AN3380-1	165 -39	2
AN3391-1	165 -41	1
AN340-10	82 -	3
AN340-6	71 -	239
AN340-616	160 -	4
AN340-8	64 -	34
AN340DD4	141 -	
AN340DD8	219 -	2
AN341-10	152 -	18
AN341-416	141 -	28
AN341-516	218 - 2	1
AN341-6	37 -	496
AN341-616	157 -	6
AN341-8	140 -	4
AN3420-10	165 -	1
AN3420-12	156 -	1

PART NUMBER	FIGURE AND INDEX NUMBER	QUANTITY
AN3420-16	156 -	1
AN3420-8	152 -	2
AN3433-2-2	157 -	13
AN3433-2-3	162 -	1
AN3433-2-6	140 -80	1
AN3433-6-2	172 -	1
AN3433-6-3	153 -	1
AN3434-1	140 -	2
AN3436-2-1	156 - 4	17
AN3436-2-10	155 -16	10
AN3436-2-11	153 -	8
AN3436-2-12	157 -40	9
AN3436-2-2	158 -	31
AN3436-2-3	158 -33	3
AN3436-2-5	288 -	1
AN3436-2-6	140 -79	5
AN3436-2-7	157 -	8
AN3436-2-8	185 - 7	1
AN3436-2-9	158 - 4	4
AN3436-4-1	152 - 9	2
AN3436-4-2	162 -25	3
AN3436-4-3	170 -31	2
AN3436-6-1	153 -49	2
AN3436-6-2	157 -	1
AN3436-6-3	153 -50	1
AN3437-3-2	164 -51	1
AN345-10	90 -	9
AN345-416	164 -	1
AN345-516	319 -	
AN345DD4	141 -	7
AN345DD8	141 -	2
AN3499	162 -	
	162 -	
AN3499-1	162 - 2	
	162 -	3
AN350-1032	71 -70	3
AN3502-2A	179 - 6	
	180 - 9	
	182 -10	10
AN3515-1	153 -30	1
AN361-1032	139 -	4
AN362-1032	105 -	3
AN362-632	153 -	2
AN363-1032	63 -	127
AN363-428	60 -	47
AN363-524	60 -	26
AN363-624	102 -	2
AN363-720	225 -19	3
AN363-820	93 -	24
AN363-832	75 -	14
AN363C1032	13 -	69
AN363C428	37 -	27
AN363C524	37 -	5
AN363C832	18 -	44
AN364-1032	13 -	196
AN364-1414	244 -	1
AN364-428	10 -	208
AN364-524	27 -	9
AN364-624	6 -	13
AN364-632	93 -	22
AN364-720	264 -	4
AN364-820	56 -	9
AN364-832	39A-	30
AN364B624	157 -	6
AN364D1032	108 -	2
AN364D832	38A-	1
AN365-1018	265 -	2
AN365-1024	83 -	1

PART NUMBER	FIGURE AND INDEX NUMBER	QUANTITY
AN365-1032	36 -	AR
AN365-1032	1 -	3464
AN365-416	319 -	
AN365-428	2 -	1089
AN365-440	3 -	549
AN365-524	8 -	184
AN365-624	3 -	81
AN365-632	30 -	587
AN365-632A	122 -	1
AN365-720	56 -	71
AN365-820	2 -	27
AN365-832	17 -	AR
AN365-832	167 -	
	176 -	1797
AN365-832A	290 -	2
AN365-918	2 -	24
AN365B1032	67 -	105
AN365B440	140 -	2
AN365B632	141 -	15
AN365B720	294 -	2
AN365B832	142 -	17
AN365D1032	121 -	7
AN365D820	83 - 9	5
AN365D832	288 -	4
AN380-1-1	30 -	7
AN380-1-2	92 -	18
AN380-2-1	29 -	78
AN380-2-2	6 -	
	7 -	488
AN380-2-3	26 -	141
AN380-2-4	52 -	13
AN380-3-2	161 -	1
AN380-3-3	26 -	45
AN380-3-4	56 -	17
AN380-3-5	267 -	2
AN380-4-4	26 -	2
AN380-4-5	90 -	3
AN380-4-7	86 -	2
AN380-4-8	83 -	1
AN380C2-2	22 -	11
AN380C2-3	250 -	1
AN380C2-4	98 -	2
AN380C3-3	95 -	2
AN380C3-5	120 - 9	1
AN380C4-6	95 -	2
AN380C5-3	95 -	2
AN381-1-6	40 -	5
AN381-2-10	67 -	5
AN381-2-12	86 -	6
AN381-2-2	69 -	4
AN381-2-6	34 -	12
AN381-2-7	69 -	1
AN381-2-8	26 -	3
AN381-3-12	70 -	1
AN385-60-4	154 -	7
AN385-60-5	93 - 7	4
AN386-1-11A	119 - 9	2
AN386-1-17A	319 -45	
AN386-1-8A	119 - 8	2
AN386-2-10	126 -22	6
AN386-2-10A	319 -20	
AN386-2-6A	97 -12	2
AN386-2-9A	97 - 3	4
AN386-3-8A	97 - 6	4
AN392-11	70 -	3
AN392-13	54 -	13
AN392-15	33 -40	11
AN392-17	38 -	8

PART NUMBER	FIGURE AND INDEX NUMBER	QUANTITY
AN392-19	70 -	3
AN392-21	71 -28	6
AN392-23	71 -	5
AN392-27	38 -60	15
AN392-29	90 -42	2
AN392-31	292 -24	1
AN392-35	29 -	2
AN392-37	265 -15	16
AN392-55	292 -19	2
AN392-7	305 -19	2
AN392-9	136 -52	3
AN393-11	38 -	19
AN393-13	34 -19	20
AN393-15	90 -	1
AN393-17	52 - 5	19
AN393-19	100 -	17
AN393-21	34 -26	16
AN393-23	38 -	20
AN393-25	70 -	3
AN393-27	286 -10	2
AN393-29	26 -16	3
AN393-35	193 -	4
AN393-37	34 - 5	4
AN393-39	62 -	13
AN393-41	263 -14	14
AN393-45	219 -16	9
AN393-51	34 -48	1
AN393-53	34 -29	6
AN393-7	38 -	21
AN393-9	35 -51	9
AN394-19	67 -	2
AN394-21	82 -32	1
AN394-25	319 -	
AN394-41	319 -25	
AN394-47	269 -	2
AN395-17	34 - 4	2
AN395-41	263 -17	4
AN395-55	123 -15	2
AN395-57	34 -28	2
AN396-27	57 - 9	2
AN396-51	319 -38	
AN398-31	319 -56	
AN398-35	319 -58	
AN398-71	120 - 8	5
AN4-10	90 -49	3
AN4-10A	3 -27	82
AN4-11	112 -47	1
AN4-11A	3 -	69
AN4-12	38 -	2
AN4-12A	10 -	41
AN4-13	112 -45	3
AN4-13A	10 -	8
AN4-14	112 -27	17
AN4-14A	10 -	14
AN4-15	6 -25	6
AN4-15A	96 -30	REF
AN4-15A	26A-38	18
AN4-16	130 - 2	2
AN4-16A	89 -24	REF
AN4-16A	65 -14	18
AN4-17	90 -28	3
AN4-17A	27 -33	16
AN4-20A	96 -29	REF
AN4-20A	65A-13	16
AN4-21	34 -46	1
AN4-21A	50 -24	14
AN4-22	34 -36	1
AN4-22A	50 -21	7

PART NUMBER	FIGURE AND INDEX NUMBER	QUANTITY
AN4-23A	193 -	2
AN4-24	35 -15	2
AN4-24A	50 -25	1
AN4-25A	50 -22	9
AN4-26A	33 -44	6
AN4-27	115 - 4	1
AN4-3	105 -	1
AN4-3A	50 - 6	6
AN4-30A	298 -	4
AN4-31	262 -16	8
AN4-31A	298 -	4
AN4-32A	298 -15	4
AN4-35	95 -19	4
AN4-35A	308 - 4	2
AN4-4	185 - 4	4
AN4-4A	102 -	21
AN4-45	79 -38	2
AN4-47A	135 - 1	2
AN4-5	122 -19	REF
AN4-5	10 -24	20
AN4-5A	9 -	68
AN4-6	30 -75	REF
AN4-6	10 -25	29
AN4-6A	8 -21	161
AN4-7	10 -32	28
AN4-7A	3 -54	154
AN4CH5A	104 -	1
AN4C5A	56 -	16
AN4C7A	56 -	3
AN4H10	77 -	2
AN4H10A	243 -31	7
AN4H11A	247 -	4
AN4H12A	247 -22	12
AN4H13	244 -	6
AN4H13A	252 - 8	4
AN4H16	89 -23	REF
AN4H16	81 -10	1
AN4H4	244 - 4	70
AN4H4A	245 -	202
AN4H5A	163 -	40
AN4H6A	252 -	
	267 -	3
AN4H7	6 -47	REF
AN4H7	2 -22	2
AN4H7A	6 -38	9
AN4044-1	103 -	AR
AN4045-1	236 - 2	1
AN4127-2	245 - 2	1
AN4127-7	245 - 3	1
AN4130-1	245 - 6	3
AN4130-23	245 - 5	9
AN4130-27	248 - 3	2
AN4131-1	250 - 2	2
AN4134-1	249 - 3	2
AN4135-1	245 - 4	7
AN416-1	106 -	9
AN416-2	254 - 7	5
AN42-10A	41 -35	1
AN42-15A	41 -17	2
AN42-3A	38 -	3
AN42-37A	87 - 9	1
AN42-4A	14 - 9	12
AN42-7A	41 -16	4
AN42B4A	122 -13	1
AN43-5	97 -34	2
AN43-5A	265 -49	4
AN43B7A	34 -18	2
AN481-12P	68 -	2

PART NUMBER	FIGURE AND INDEX NUMBER	QUANTITY
AN481-4P	97 -32	2
AN486-4	34 -20	7
AN490HT15	112 -	3
AN490HT9	112 -	2
AN5-10A	79 -46	REF
AN5-10A	36 -16	30
AN5-11A	36 -17	2
AN5-12	92 -14	2
AN5-12A	38 -	90
AN5-13A	43 -43	2
AN5-14A	43 -44	3
AN5-17A	305 -39	4
AN5-20A	268 -15	8
AN5-21A	97 -16	2
AN5-22A	9 -	14
AN5-23A	9 -	6
AN5-25	319 -46	
AN5-26A	65 -13	4
AN5-31A	84 - 6	2
AN5-6	60 -	4
AN5-6A	37 - 7	10
AN5-7	163 -	2
AN5-7A	38 -	22
AN5H11A	71 -	2
AN5H4	272 -	8
AN5H4A	29 -67	REF
AN5H4A	26 -23	9
AN500-10-10	83 -	1
AN500-6-7	65A- 9	8
AN500-8-12	276 - 3	4
AN500AC4-6	148 - 8	4
AN500AC416-28	294 -13	4
AN500A10-5	68 -	AR
AN500A10-6	298 -11	12
AN500A10-7	299 -	17
AN500A4-5	291 -	1
AN500A6-16	114 -	10
AN500A6-18	186 - 6	8
AN500A6-5	297 -	32
AN500A6-7	157 -	2
AN500A8-10	168 -	4
AN500A8-5	42 -	19
AN500A8-6	116 -	3
AN500A8-7	93 - 9	11
AN500A8-8	268 -54	11
AN500A8-9	288 -	2
AN501-10-10	244 -15	2
AN501A10-22	188 -	2
AN501A10-4	188 -	2
AN501A10-5	95 -48	6
AN501A10-6	306 -	4
AN501A10-8	115 -13	10
AN501A416-10	297 -	4
AN501A416-5	83 -	1
AN501A416-6	83 -68	1
AN501A5-5	83 -59	1
AN501A6-4	149 - 9	8
AN501B4-6	287 -51	4
AN502-10-10	143 -15	18
AN502-10-18	243 -21	2
AN502-10-4	127 -13	1
AN502-10-7	194 -	1
AN502-10-8	243 -16	30
AN502-416-10	245 -39	8
AN502-416-24	244 - 9	4
AN502-416-26	144 - 4	8
AN502A10-6	149 - 7	4
AN503-416-6	284 - 4	4

PART NUMBER	FIGURE AND INDEX NUMBER	QUANTITY
AN503-6-4	82 -55	1
AN503-6-6	73 -	8
AN503-8-12	229 - 5	2
AN503-8-4	113 -10	10
AN503-8-6	306 -	2
AN503-8-8	246 - 7	4
AN503C8-10	141 -13	6
AN503C8-6	141 -	2
AN504-6R6	177 -	2
AN505-8R8	121 -	5
AN505DD4-8	141 -	
AN507-10R10	121 -	18
AN507-10R12	121 -	10
AN507-10R8	121 -	7
AN507-1024R7	121 -	4
AN507-1032R10	30 -	24
AN507-1032R14	132 -45	8
AN507-1032R16	71 -	10
AN507-1032R20	196 -	3
AN507-1032R7	7 -	10
AN507-1032R8	7 -	68
AN507-1032R9	289 -	7
AN507-4R4	288 -	2
AN507-428R14	258 -	32
AN507-440-11	174 - 7	2
AN507-440-5	7 -	4
AN507-440-6	7 - 4	2
AN507-440R24	187 - 4	12
AN507-440R6	140 - 3	10
AN507-440R8	5 -	2
AN507-632R12	166 -	3
AN507-632R14	301 -	4
AN507-632R16	41 -	20
AN507-632R18	67 -	3
AN507-632R32	93 - 4	14
AN507-632R5	114 -	6
AN507-632R6	262 -	18
AN507-632R7	140 -15	57
AN507-632R8	140 -	22
AN507-632R9	168 -	8
AN507-8R8	173 -	3
AN507-832-10	85 -16	1
AN507-832-8	71 -	4
AN507-832R10	168 -	4
AN507-832R12	7 -	19
AN507-832R16	7 -	56
AN507-832R18	67 -	3
AN507-832R24	168 -	4
AN507-832R40	180 -25	1
AN507-832R48	180 -	1
AN507-832R5	156 -	4
AN507-832R6	73 -	12
AN507-832R7	173 -	3
AN507-832R8	2 -25	7
AN507B1032R7	140 -	1
AN507B6R12	140 -	1
AN507B6R20	140 -	2
AN507B6R7	140 -	3
AN507B616R28	160 -	2
AN507B632R10	171 - 6	5
AN507B632R20	140 -	21
AN507B632R6	141 -16	4
AN507B8R15	140 -	1
AN507C1032R16	22 -16	1
AN507C832R10	22 -17	174
AN507DD448-7	141 -	7
AN507PB632R16	141 -	1
AN507UB1032R7	140 -	1

PART NUMBER	FIGURE AND INDEX NUMBER	QUANTITY
AN507UB632R20	140 -	5
AN509-10-11	27 -	12
AN509-10-12	27 -	18
AN509-10-13	27 -	43
AN509-10-14	27 -	55
AN509-10-15	27 -	21
AN509-10-16	27 -	3
AN509-10-17	41 -34	5
AN509-10-27	5 -64	30
AN509-10-34	96 -22	2
AN509-10-37	96 -	2
AN509-10-7	47 -59	19
AN509-10-8	39 -	46
AN509-10-9	13 -21	112
AN509-10R10	7 -	1136
AN509-10R11	7 -11	407
AN509-10R12	7 -	70
AN509-10R13	28A-62	44
AN509-10R14	13 -	50
AN509-10R15	25 -	8
AN509-10R16	28A-64	24
AN509-10R17	10 -	13
AN509-10R18	10 -	4
AN509-10R21	10 -	4
AN509-10R22	10 -	2
AN509-10R41	5 -65	2
AN509-10R6	124 -14	6
AN509-10R7	19A-	543
AN509-10R8	7 -	445
AN509-10R9	5 -43	698
AN509-1032R10	74 -	16
AN509-1032R7	31 -39	7
AN509-416-12	27 -	4
AN509-416-13	27 -	2
AN509-416-14	298 -	6
AN509-416-16	27 -	10
AN509-416-17	27 -	2
AN509-416-18	27 -	2
AN509-416-19	43 - 8	8
AN509-416-20	27 -	4
AN509-416-30	115 -28	2
AN509-416-31	11 -	8
AN509-416-43	96 -28	4
AN509-416-47	96 -	4
AN509-416R10	265 -	8
AN509-416R11	32 -	10
AN509-416R12	10 -	8
AN509-416R13	12 -27	78
AN509-416R14	116 -50	2
AN509-416R15	60 -12	1
AN509-416R16	13 -23	2
AN509-416R17	11 - 9	16
AN509-416R18	13 -22	2
AN509-416R28	95 -45	2
AN509-416R30	281 -12	1
AN509-516-13	302 -30	2
AN509-516-15	27 -	4
AN509-516-16	302 -31	4
AN509-516-18	27 -	4
AN509-516R10	8 -	2
AN509-516R15	7 -12	8
AN509-516R22	38 -	2
AN509-8-11	31 -23	12
AN509-8-5	309 -	16
AN509-8-7	78 -	6
AN509-8-8	35 -29	24
AN509-8-9	57 -18	4
AN509-8R10	168 -	24

PART NUMBER	FIGURE AND INDEX NUMBER	QUANTITY
AN509-8R11	157 -	1
AN509-8R12	47 -53	4
AN509-8R15	289 -	4
AN509-8R16	289 -	2
AN509-8R20	289 -37	4
AN509-8R22	292 -	1
AN509-8R5	102 -11	8
AN509-8R6	32 -	16
AN509-8R7	20 - 3	35
AN509-8R8	7 -	81
AN509-8R9	47 -68	23
AN509C416R6	10 -	2
AN509P10R16	71 -58	20
AN509P10R26	71 -	2
AN509P8-7	24 -	
AN509Z10R12	67 -54	20
AN509Z10R14	67 -44	28
AN509Z10R16	67 -43	37
AN509Z10R17	67 -	2
AN509Z10R9	67 -	2
AN50910R10	13 -	50
AN510-10R8	255 -	1
AN515-C8R8	138 -23	2
AN515-10A8	105 -	3
AN515-10R10	203 -	1
AN515-10R12	293A-	2
AN515-10R24	158 -	1
AN515-10R7	293 -	1
AN515-10R8	112 - 5	7
AN515-2R4	286 -	2
AN515-4-12	115 -40	6
AN515-4-6	3 -	1
AN515-4R10	164 -	9
AN515-4R12	116 -45	7
AN515-4R16	116 -25	2
AN515-4R18	125 -37	2
AN515-4R24	140 -	2
AN515-4R3	116 -	1
AN515-4R4	140 -	18
AN515-4R5	152 -	53
AN515-4R6	45 -	216
AN515-4R7	8 -	147
AN515-4R8	152 -	78
AN515-416R7	31 -	2
AN515-6-14	247 -	6
AN515-6-18	261 -29	4
AN515-6-20	112 -23	2
AN515-6-32	170 -	4
AN515-6-6	54 -	12
AN515-6-8	30 -64	4
AN515-6R10	112 -	71
AN515-6R12	140 -	37
AN515-6R14	173 -	10
AN515-6R16	158 -	6
AN515-6R18	82 -16	25
AN515-6R26	164 -	4
AN515-6R28	299 -14	4
AN515-6R3	115 -30	4
AN515-6R32	93 - 5	6
AN515-6R4	176 -	4
AN515-6R40	154 -24	5
AN515-6R5	38 -	185
AN515-6R6	38 -	148
AN515-6R7	113 -14	159
AN515-6R8	37 -	173
AN515-6R9	152 -32	14
AN515-8-24	290 -	1
AN515-8-27	38A- 5	1

PART NUMBER	FIGURE AND INDEX NUMBER	QUANTITY
AN515-8-4	183 -	2
AN515-8-6	17 -10	AR
AN515-8-6	121 -	2
AN515-8-7	310 -15	32
AN515-8-8	100 -	13
AN515-8R10	37 -	206
AN515-8R12	71 -	46
AN515-8R13	71 -	12
AN515-8R14	18 -51	47
AN515-8R16	142 -29	24
AN515-8R18	157 -	6
AN515-8R20	118 -10	14
AN515-8R24	143 -	5
AN515-8R26	282 -19	1
AN515-8R27	282 -18	3
AN515-8R28	153 -	10
AN515-8R30	162 -	1
AN515-8R32	50 -28	4
AN515-8R36	158 -	1
AN515-8R4	116 -20	9
AN515-8R42	278 -20	1
AN515-8R5	64 - 7	19
AN515-8R6	42A-	173
AN515-8R7	34 -	390
AN515-8R8	37 -	933
AN515-8R9	26A-	65
AN515B10R20	140 -	1
AN515B4R10	168 -	4
AN515B4R5	168 -	4
AN515B4R6	140 -	2
AN515B4R8	155 -	4
AN515B6R18	140 -	1
AN515B6R20	140 -	15
AN515B6R6	140 -	5
AN515B6R7	140 -	2
AN515B6R8	144 - 2	3
AN515B8R10	140 -	6
AN515B8R12	140 -81	2
AN515B8R7	167 -	1
AN515B8R8	142 -	10
AN515C8R16	294 - 9	8
AN515C8R8	294 -11	5
AN515C8R9	26A-23	2
AN515PB6R16	141 -	1
AN515PB6R20	37 -	6
AN515UB6R20	140 -	1
AN520-10-10	130 -	3
AN520-10-12	27 -	2
AN520-10-14	119 -11	9
AN520-10-5	29 -	2
AN520-10-7	27 -	10
AN520-10-8	3 -	12
AN520-10-9	27 -	2
AN520-10R10	31 -13	125
AN520-10R12	100 -	31
AN520-10R13	309 -	16
AN520-10R14	63 -	9
AN520-10R16	208 -	7
AN520-10R18	146 -	10
AN520-10R20	94 -16	14
AN520-10R21	152 -	1
AN520-10R22	196 -	2
AN520-10R24	158 -	3
AN520-10R26	94 - 4	4
AN520-10R28	173 -	2
AN520-10R30	94 -15	6
AN520-10R36	165 -	1
AN520-10R5	69 -	3

PART NUMBER	FIGURE AND INDEX NUMBER	QUANTITY
AN520-10R6	14 -	22
AN520-10R7	55 -29	131
AN520-10R8	3 -	442
AN520-10R9	116 - 9	5
AN520-1032R18	112 -26	1
AN520-1032R8	31 -42	2
AN520-416R10	172 -	4
AN520-416R12	158 -	2
AN520-416R7	2 - 6	8
AN520-428R8	165 -	1
AN520-8R12	167 -	8
AN520-8R5	39 -	1
AN520B10R12	160 -	2
AN520B10R28	140 -	1
AN520C10R10	148 -	4
AN520C10R14	111 -46	1
AN520C10R21	303 -30	2
AN520C10R8	148 -	4
AN520DD10-7	154 -	1
AN520UB10R28	140 -	1
AN525-10-6	306 -	4
AN525-10-8	118 -	2
AN525-10R6	200 -	2
AN525-416R10	56 -	78
AN525-416R11	56 -	17
AN525-416R12	56 -	12
AN526-1032-6	27 -	4
AN526-1032-9	301 -10	4
AN526-1032R14	71 -14	4
AN526-1032R16	267 -25	12
AN526-1032R7	121 -	4
AN526-832R12	177 -	2
AN526-832R8	53 -	2
AN526C1032-10	148 - 4	2
AN526C1032R7	305 -31	40
AN526C1032R8	305 -32	9
AN526C428R12	110 -	32
AN526C428R7	307 -	8
AN526C832R6	176 -	1
AN526DD836-7	141 -	2
AN530-10R10	280 -19	1
AN530-10R8	209 -	6
AN530-2-4	121 -	4
AN530-2R4	275 -21	1
AN530-2R6	71 -	9
AN530-4-4	114 -	2
AN530-4R4	41 -37	2
AN530-4R6	32 -	22
AN530-6R4	36 -	4
AN530-6R6	36 -	8
AN530-6R8	153 -	6
AN530-8-8	158 -	4
AN530-8R6	307 -	6
AN531-8R6	307 -	2
AN535-0-2	112 -	4
AN535-00-2	84 -	22
AN535-2-2	26A-	1
AN535-2-3	47 -66	2
AN535-2-4	28 -	208
AN535-4-5	71 -	5
AN5534-1	146 -10	1
AN5537-4-1	148 -13	1
AN5537-4-2	148 -	1
AN5538-1	146 - 5	3
AN5538-2	146 -	1
AN565A2-4	70 -65	16
AN565A4-5	100 -	2
AN565A6H3	115 -19	8

PART NUMBER	FIGURE AND INDEX NUMBER	QUANTITY
AN565A8H4	281 -31	2
AN565B4-3	115 -44	4
AN565B6-3	113 -21	2
AN565C10-8	82 -58	1
AN565D4H6	286 -	1
AN565D6H3	293A-	5
AN565D8H3	293 -	4
AN5743T1A	140 -	
	141 -21	2
AN5766-4C	141 -19	1
AN5771-7A	211 -	1
AN5771T4B	299 -13	1
AN5771T4C	299 -	
AN5771T7A	188 -65	
	211 -	
	228 - 3	3
AN5776-1	157 -	
AN5800-1	121 -18	1
AN5800-2	121 -28	1
AN5809-1	140 -26	1
AN5816-2	149 - 8	1
AN5823-1	148 -20	1
AN5825T5	140 -60	1
AN5839-1	179 - 9	3
AN5839-2	179 -	
AN6-10A	3 -35	5
AN6-11A	3 -29	15
AN6-12A	90 -	1
AN6-13A	135 -	1
AN6-14A	98 - 5	4
AN6-16A	137 -16	3
AN6-17	90 -12	1
AN6-17A	90 -56	2
AN6-20	90 -33	1
AN6-20A	311 - 2	4
AN6-21	90 -18	1
AN6-21A	23 -33	9
AN6-22	83 -41	2
AN6-27	85 -21	1
AN6-27A	79 -36	2
AN6-32A	18 -29	8
AN6-33A	18 -	6
AN6-34A	18 -	2
AN6-6A	153 -	2
AN6-7A	302 -12	4
AN6H12A	319 -28	
AN6003-24A	287 -57	1
AN6003T12A	287 -56	1
AN6024-6	287 -25	1
AN6033-1	287 -32	
	287 -39	3
AN6036-1	287 - 9	4
AN6207-6	198 -16	1
AN6207-8	193 -50	1
AN6227-6	82 -47	1
AN6227-7	82 -48	1
AN6227B10	218 -23	8
AN6227B11	219 - 7	6
AN6227B12	95 -24	7
AN6227B13	286 -	1
AN6227B14	243 - 6	8
AN6227B15	233 - 3	2
AN6227B17	243 -13	2
AN6227B18	269 -46	1
AN6227B19	219 -18	8
AN6227B2	243 -	9
AN6227B20	232 - 4	2
AN6227B22	269 -24	1

PART NUMBER	FIGURE AND INDEX NUMBER	QUANTITY
AN6227B25	83 - 7	1
AN6227B26	126 -36	2
AN6227B27	232 - 6	4
AN6227B28	253 -17	3
AN6227B3	198 -	8
AN6227B32	242 - 7	6
AN6227B33	95 -13	2
AN6227B34	275 -19	1
AN6227B35	83 -16	4
AN6227B37	83 -14	7
AN6227B4	241 -	6
AN6227B44	95 - 7	2
AN6227B47	95 - 5	2
AN6227B48	237 -11	4
AN6227B49	226 - 4	2
AN6227B5	38 -	9
AN6227B6	190 -	11
AN6227B7	219 - 3	12
AN6227B8	201 -	2
AN6227B9	219 - 5	3
AN622787	82 -43	1
AN6230B13	225 - 3	3
AN6230B14	225 -12	9
AN6230B26	226 - 6	2
AN6230B9	237 - 6	2
AN6231-3	232 -13	2
AN6231A24	83 -11	1
AN6231A33	95 - 3	2
AN6231A9	242 -19	2
AN6232C2-3/8	232 -11	2
AN6234-2	193 -58	
	230 -13	2
AN6234-3	193 -52	
	230 - 7	2
AN6244-26	226 - 7	2
AN6245B4	195 -28	
	213 -13	3
AN6246-10	225 -17	6
AN6246-12	95 -	6
AN6246-14	243 -	8
AN6246-15	233 -	4
AN6246-17	243 -	2
AN6246-19	242 - 9	4
AN6246-20	232 -	4
AN6246-25	83 - 6	1
AN6246-27	232 -	8
AN6246-32	242 - 6	8
AN6246-33	95 -	2
AN6246-35	83 -15	3
AN6246-4	241 -	4
AN6246-44	95 -	4
AN6246-48	237 -18	2
AN6246-49	226 - 5	2
AN6246-5	241 -	3
AN6246-6	241 -	5
AN6246-7	233 -	8
AN6248-2	308 - 3	1
AN6249-4	191 -27	
	191 -	2
AN6249-6	197 -12	
	197 -23	
	202 - 7	
	203 - 5	
	204 - 7	
	205 - 5	
	208 -17	
	209 - 8	
	210 -48	

PART NUMBER	FIGURE AND INDEX NUMBER	QUANTITY
AN6249-6	212 -12	
	212 -29	11
AN6249-8	195 - 4	
	195 - 6	
	197 - 7	
	198 -24	4
AN6264-16D-17-1/4	250 -13	1
AN6264-16D11-7/8	245 -34	1
AN6264-16D23	245 -35	1
AN6264-6D13	258 -23	
	259 -16	4
AN6264-8D13	265 - 4	2
AN6270-4-10-1/8	151 -22	1
AN6270-4-13	150 -	
	150 -	2
AN6270-4-13-1/2	150 -52	1
AN6270-4-15	150 -53	1
AN6270-4-16	150 - 6	
	150 - 8	
	150 - 9	3
AN6270-4-18	150 - 7	1
AN6270-4-19-1/2	150 -51	1
AN6270-4-22	150 -10	1
AN6270-4-24	150 -11	1
AN6270-4-5-3/4	150 -47	1
AN6270-4-6-1/2	150 -46	1
AN6270-4-8	274 - 4	1
AN6271-3-19	299 -62	6
AN6271-4-44	69 -33	1
AN6279-6CD	195 -11	
	200 -39	
	202 -13	
	203 - 7	
	204 -14	
	205 - 9	
	211 - 5	7
AN6287-1	83 -65	
	95 -30	
	188 -62	
	211 -	
	228 -11	
	299 -17	7
AN6289-4	143 -11	53
AN6289-4D	274 -	1
AN6289-6	189 -	53
AN6289-8	200 -	2
AN6289-8D	231 -	1
AN6289D12	117 -	5
AN6289D3	297 -	8
AN6289D4	82 -	33
AN6289D6	117 -	17
AN6289D8	117 -	17
AN6290-10	117 -12	3
AN6290-12	104 -	13
AN6290-2	187 -10	12
AN6290-3	236 - 5	13
AN6290-4	82 -	155
AN6290-5	236 -	8
AN6290-6	104 - 7	164
AN6290-8	104 -	66
AN6291-12	117 -	5
AN6291-3	297 -	8
AN6291-4	143 -10	82
AN6291-6	117 -	71
AN6291-8	117 -	19
AN6292-6-14-5/8	199 -23	REF
AN6292-6-14-5/8	209 -21	1
AN6292-6-27	198 -50	REF

PART NUMBER	FIGURE AND INDEX NUMBER	QUANTITY
AN6292-6-27	208 - 2	1
AN6292-8-16-3/4	195 -74	REF
AN6292-8-16-3/4	207 -23	1
AN6292-8-22	195 -73	REF
AN6292-8-22	207 - 6	1
AN6292-8-25-1/2	104 - 9	
	105 - 7	2
AN6292-8-26-1/2	104 - 1	
	105 - 1	2
AN6532-1A	285 - 3	1
AN658-3	132 -	4
AN659-1	149 - 3	25
AN659-2	149 -	3
AN659-3	289 -	3
AN659-4	289 -	1
AN663C3	101 - 2	11
AN663C4	297 -17	2
AN664C2	35 -	6
AN664C3	261 -	6
AN664C4	54 -	4
AN664C5	137 -	2
AN665-10R	69 -	3
AN665-21L	100 - 6	1
AN665-21P	100 -	2
AN666-2R	98 -	2
AN666-2RH	69 -	1
AN666-3RH	101 -	1
AN667-2	68 -	3
AN667-4	54 -	4
AN668-4	54 -	6
AN669-52RH	304 -	1
AN669L3LH	132 -	4
AN669L3RH	132 -	4
AN669L5LH	137 -	2
AN669S2	35 -	4
AN669S2LH	68 -	3
AN669S2RH	68 -	6
AN669S3LH	112 -	4
AN669S3RH	113 -	6
AN679A08W	34 -	1
AN7-11A	56 -14	4
AN7-14	201 - 6	2
AN7-14A	90 -	22
AN7-15	201 - 7	2
AN7-15A	90 -	12
AN7-16	56 -38	2
AN7-26A	82 -38	2
AN7-27A	207 - 3	2
AN724-4D	149 -29	2
AN73-12	144 -12	20
AN73-3	100 -	1
AN73-5	160 -	2
AN735-36	83 -42	2
AN735-8	274 -	1
AN735B6	259 - 8	2
AN735D11	288 -	6
AN735D12	290 - 4	4
AN735D14	296 -18	3
AN735D15	308 -34	1
AN735D16	83 -43	6
AN735D20	258 -46	8
AN735D22	276 -	2
AN735D24	252 -24	2
AN735D6	258 - 9	19
AN737-22	274 -	2
AN737-26	106 - 6	4
AN737-30	265 -61	12
AN737-34	285 - 5	11

PART NUMBER	FIGURE AND INDEX NUMBER	QUANTITY
AN737-46	247 -	16
AN737RH26	269 -	2
AN737RM34	269 -	2
AN737TW107	271 -28	1
AN737TW114	108 -39	1
AN737TW22	153 - 9	14
AN737TW26	153 -11	29
AN737TW34	260 -15	6
AN737TW38	287 -	2
AN737TW44	279 -	6
AN737TW46	252 -	88
AN737TW56	253 -	34
AN737TW58	252 -	8
AN737TW66	252 -	8
AN737TW74	271 - 5	16
AN737TW82	272 -41	3
AN74-12	144 - 6	20
AN74-14	244 -24	24
AN74-3	147 - 6	81
AN74-4	112 -	66
AN74-5	146 -14	51
AN74-7	252 -	12
AN742-D10	281 -	4
AN742-10C	105 -	8
AN742-11C	290 -13	1
AN742-12	165 -	2
AN742-12C	120 -17	6
AN742-13C	105 -	1
AN742-18C	102 -	1
AN742-21C	104 -20	2
AN742-24C	253 -	1
AN742-3	100 -	2
AN742-36	106 -12	3
AN742-38	107 -	
AN742-4C	100 - 9	1
AN742-4D	82 -52	2
AN742-40	106 -	6
AN742-5	82 -20	5
AN742-6	77 -	35
AN742-6C	102 -	1
AN742-8	102 -	9
AN742C6D	151 -18	1
AN742D10	164 - 8	15
AN742D10C	63 -	78
AN742D10CB	164 -40	4
AN742D11C	153 -45	2
AN742D11CB	292 -	2
AN742D12C	104 - 4	38
AN742D12CB	293 -	1
AN742D13	202 -	2
AN742D13C	105 - 5	1
AN742D14C	153 -28	14
AN742D15C	165 -49	10
AN742D16	157 -25	10
AN742D16C	104 - 5	7
AN742D17C	156 -	2
AN742D18	278 -30	1
AN742D18C	69 -35	17
AN742D18CB	173 -48	7
AN742D19C	102 -17	6
AN742D20C	165 -	3
AN742D21C	311 -30	2
AN742D22C	163 -	7
AN742D22CB	252 -18	7
AN742D24	253 -	3
AN742D24C	172 -	2
AN742D26C	157 -	1
AN742D26CB	252 -21	3

PART NUMBER	FIGURE AND INDEX NUMBER	QUANTITY
AN742D28C	210 -	1
AN742D3	119 -20	5
AN742D30C	155 -	4
AN742D34C	292 -	1
AN742D4	138 -16	94
AN742D4C	158 -36	19
AN742D4CB	292 -	1
AN742D42CB	258 -40	4
AN742D5	34 -33	2
AN742D5C	154 -	32
AN742D5CB	155 -	20
AN742D50C	196 -31	3
AN742D6	149 -	114
AN742D6C	86 -	138
AN742D6CB	157 -	21
AN742D6L	105 -27	2
AN742D7	125 -	23
AN742D7C	147 -18	32
AN742D7CB	155 -	11
AN742D8	170 -	13
AN742D8C	86 -	212
AN742D8CB	155 -	10
AN742D8L	105 -26	2
AN742D9	155 -	2
AN742D9C	100 - 4	37
AN742D9CB	155 -	4
AN7425C	273 - 8	5
AN743-12	290 -	1
AN743-6	289 -	1
AN748-46	250 -22	3
AN749-1-4	174 - 4	2
AN749-1-5	141 -	3
AN749-1-66	287 -	2
AN749-2-3	30 -63	3
AN749-2-4	143 - 4	4
AN749-2-5	272 -	2
AN749-2-6	176 -23	1
AN749-3-3	152 -12	8
AN749-3-4	253 -33	32
AN749-3-5	258 -61	2
AN749-3-6	153 -	7
AN7502-23	83 -27	1
AN7502-32	95 -53	2
AN7503-23	83 -26	1
AN751-3-6	297 -	4
AN7510-1	3 -	18
AN7510-2	6 -	12
AN753-1	263 -32	2
AN76A43	244 -	3
AN760D16	258 -	8
AN775-6	269 -31	1
AN776-6	269 -29	1
AN781-1	140 -47	30
AN781-2	140 -	22
AN781-3	153 -	12
AN781-4	157 -27	2
AN783-4	191 -28	1
AN783-6	210 -47	1
AN783-6D	210 -	1
AN783D6	196 -39	2
AN783D8	197 - 4	3
AN784-6	206 -	5
AN784D4	195 -29	2
AN784D6	206 - 3	2
AN784D8	197 -	2
AN8-12A	307 -34	2
AN8-14A	93 -26	24
AN8-16A	2 -12	6

PART NUMBER	FIGURE AND INDEX NUMBER	QUANTITY
AN8-25A	265 - 7	2
AN8-30A	265 -19	2
AN8008D10	153 -	8
AN8008D21	156 -17	4
AN8008D28	296 - 3	2
AN8008D30	296 - 2	2
AN8008D4	289 -	6
AN8013-1	289 -	6
AN8013-2	296 -	8
AN8013D1	147 -	21
AN8013D2	153 -	4
AN804-4	193 -19	7
AN804-6	191 -	14
AN804D4	188 -25	7
AN804D6	191 - 4	10
AN804D8	193 -	5
AN806D10	272 - 9	1
AN806D4	196 -34	3
AN806D6	282 -	1
AN814-12D	249 -28	1
AN814-2	245 -	1
AN814-3	144 -15	2
AN814-4	95 -31	2
AN814-6D	253 -	1
AN814-6DL	253 -39	1
AN814-8D	221 -13	3
AN815-10D	281 -17	3
AN815-12D	104 -12	4
AN815-16D	249 -27	1
AN815-20D	249 -15	2
AN815-3	236 - 4	1
AN815-3D	299 -58	4
AN815-32D	255 -19	1
AN815-4	69 -32	12
AN815-4D	117 - 5	53
AN815-5D	287 -16	2
AN815-6	77 -	45
AN815-6D	104 - 6	50
AN815-8D	104 -	24
AN816-4	53 - 5A	1
AN816-4D	140 -32	12
AN816-5-4D	287 -30	4
AN816-6-6B	283 - 4	1
AN816-6D	40 -32	2
AN818-10	240 -20	3
AN818-10D	59 -39	1
AN818-24D	255 -	1
AN818-32	77 -	1
AN818-32D	77 -51	2
AN818-4D	64 -	3
AN818-6	77 -	4
AN818-6D	258 -	8
AN818-8D	63 -	1
AN819-10	240 -19	3
AN819-10Z	59 -	1
AN819-24	255 -	1
AN819-32	255 -	1
AN819-4Z	272 -	1
AN819-6	77 -	2
AN819-6Z	77 -	10
AN819-8D	63 -	1
AN821-16D	252 -10	1
AN821-4D	197 -67	3
AN821-6	198 -	8
AN821-6D	193 -55	13
AN821-8D	197 -29	2
AN822-4	150 -	3
AN822-4B	284 - 9	1

PART NUMBER	FIGURE AND INDEX NUMBER	QUANTITY
AN822-4D	140 -42	6
AN822-5D	287 -52	1
AN822-6-6B	283 - 5	1
AN823-4	120 -	2
AN823-4D	140 -43	3
AN824-10D	285 -26	1
AN824-4	188 -34	1
AN824-4D	104 -24	6
AN824-5D	287 -12	3
AN824-6	200 -	11
AN824-6D	193 -60	16
AN824-8D	193 - 9	1
AN825-4D	277 - 4	1
AN826-10D	281 -	1
AN826-4D	149 -16	4
AN827-4D	150 -40	1
AN827-6	200 -	1
AN827-6D	200 -51	1
AN832-12D	252 -45	1
AN832-16D	252 - 4	3
AN832-20D	253 -47	1
AN832-4	188 -16	13
AN832-4D	64 -26	45
AN832-6	206 -	17
AN832-6D	190 -14	17
AN832-8	210 -42	2
AN832-8D	207 - 7	3
AN833-10D	244 -11	1
AN833-12D	117 - 7	4
AN833-16D	249 -24	3
AN833-20D	257 - 4	2
AN833-3D	299 -59	2
AN833-4	82 -41	15
AN833-4D	105 -	94
AN833-5D	287 -18	2
AN833-6	191 -	41
AN833-6D	117 - 2	36
AN833-8D	117 - 9	9
AN834-16D	252 -32	2
AN834-4	239 - 9	1
AN834-4D	188 -10	3
AN834-6	210 -	4
AN834-6D	231 - 6	2
AN834-8D	222 - 7	3
AN837-16D	249 -17	2
AN837-20D	244 - 6	3
AN837-32D	255 -14	1
AN837-4	143 - 8	14
AN837-4D	102 -21	38
AN837-5D	287 -14	1
AN837-6	192 -	9
AN837-6D	190 -16	19
AN837-8D	192 - 7	7
AN839-16D	247 -20	2
AN840-16	244 -16	1
AN840-4	244 -25	3
AN842-10	260 -13	2
AN883-4-24	274 -11	1
AN883-4-34	274 -10	1
AN884-6-12	196 -13	1
AN889-2	171 -	2
AN893-12D	231 - 5	3
AN893-151D	117 -10	1
AN893-16D	240 -32	1
AN893-2	209 -12	2
AN893-2D	189 -13	3
AN893-3D	256 -19	1
AN894-6-4	206 -	1

PART NUMBER	FIGURE AND INDEX NUMBER	QUANTITY
AN894-6-4D	206 -	1
AN894D12-6	308 -21	2
AN894D6-4	197 -13	2
AN894D8-4	193 -	1
AN894D8-6	197 -	2
AN899-1	166 -	3
AN9-15A	79 -48	REF
AN9-15A	207 - 2	6
AN9-16A	2 -13	10
AN9-20A	265 -37	4
AN900-34	266 - 8	4
AN900-8	201 -	2
AN901-4C	64 -	1
AN901-6C	117 -14	4
AN902-6	253 -38	1
AN902B12	104 -	2
AN902B4	282 -	2
AN902B6	282 -	1
AN902B8	282 -	2
AN904-1	166 -	1
AN911-1D	150 - 3	2
AN913-1	266 -10	4
AN914-4	260 - 5	2
AN915-2D	287 - 8	1
AN915-4R10	289 -	1
AN916D416L	271 -	4
AN917-1D	150 - 2	3
AN917-4D	150 -12	1
AN919-10D	193 -	6
AN919-11	236 - 6	1
AN919-12	207 -	3
AN919-12D	104 -15	24
AN919-15D	63 -61	1
AN919-2	209 -19	1
AN919-3D	282 -15	1
AN919-6	102 -	21
AN919-6D	190 -	33
AN919-7	236 - 7	1
AN920-8D	197 -	2
AN924-10D	244 -	1
AN924-12D	104 -	5
AN924-16D	247 -	14
AN924-20D	244 -	8
AN924-24D	255 -12	1
AN924-32D	255 -	1
AN924-4	196 -	5
AN924-4D	64 -	144
AN924-5	139 -	1
AN924-5D	138 -	6
AN924-6	199 -	2
AN924-6D	190 -	72
AN924-8D	192 -	12
AN925-4D	197 -34	5
AN926-4	191 -22	1
AN926-4D	227 -13	3
AN926-6	209 - 9	1
AN926-6D	193 -	5
AN926-8D	193 - 5	4
AN927-4	191 -20	1
AN927-4D	214 -11	2
AN927-6	208 -23	2
AN927-6D	213 -18	1
AN928-4D	227 -18	1
AN928-6D	190 -13	2
AN929-4	102 -	6
AN929-5	102 -20	1
AN929-6	239 - 8	1
AN929-6D	196 -	1
AN929-6S	282 -	
AN929-8	240 -28	1
AN929A4	53 - 6	1
AN931-10-14	114 -33	12
AN931-10-20	173 -	2
AN931-10S14	257 -	1
AN931-11-16	154 -45	1
AN931-11S16	257 -	1
AN931-12-23	172 -25	1
AN931-14-20	172 -16	4
AN931-14-26	168 -	2
AN931-14S20	288 -	1
AN931-16-22	157 -	9
AN931-24-28	153 -35	1
AN931-3-5	67 -	4
AN931-3-9	65 -	1
AN931-4-12	156 -	1
AN931-4-7	30 -	14
AN931-4S7	190 -	5
AN931-5-9	73 -	20
AN931-5S12	287 -	2
AN931-5S13	121 - 6	1
AN931-6-10	29 -	29
AN931-6-16	193 -	4
AN931-6S10	259 - 7	16
AN931-7-11	146 - 4	2
AN931-8-13	167 - 3	7
AN931-8-20	173 - 5	4
AN931-9-13	159 - 9	43
AN931A10-14	285 -14	1
AN931A16S22	252 -31	4
AN931A24-28	157 -51	1
AN931A24S28	157 -	3
AN931A5-9	153 - 3	3
AN931A6-10	149 -15	1
AN931A6-16	148 -18	1
AN931A8-13	289 - 5	3
AN931B10-14	127 -	1
AN931B4-7	252 -	1
AN931B7-11	127 -16	1
AN931B9-13	156 -11	1
AN932-2	150 -56	4
AN935-10	55 -	80
AN935-10L	71 -	3
AN935-2L	286 -	2
AN935-4	289 -	1
AN935-4L	157 -	2
AN935-416	153 -	71
AN935-416L	158 -	3
AN935-6	113 -	25
AN935-6L	153 -	108
AN935-616	160 -	4
AN935-8	125 -	40
AN935-8L	116 -	44
AN935B10	160 -	2
AN935B6L	37 -	6
AN935B616L	160 -	3
AN935B8	140 -	4
AN936A10	71 -	19
AN936A10B	140 -	17
AN936A108	152 -	1
AN936A4	112 -	25
AN936A416	141 -	11
AN936A416B	153 -	11
AN936A416H	280 -16	2
AN936A516	273 - 6	2
AN936A6	71 -	204
AN936A6B	140 -	430

PART NUMBER	FIGURE AND INDEX NUMBER	QUANTITY
AN936A616	97 -	32
AN936A8	64 -	26
AN936B10	94 -	4
AN936B4	140 -	48
AN936B416B	143 -18	4
AN936B8	157 -	10
AN938-8D	231 - 3	1
AN938D6	200 -27	3
AN938D8	195 - 7	1
AN939-12D	104 -13	2
AN939-4	206 -	1
AN939-4D	231 -14	1
AN939-6D	209 -17	2
AN939-8	222 -14	1
AN939D12	196 -20	1
AN939D4	206 -12	1
AN941-6D	104 - 8	4
AN941-8D	104 -10	2
AN944-101	26 -	21
AN944-201	26A-	7
AN944-301	26A-	4
AN960-A10	48 -	2
AN960-10	71 -	AR
AN960-10	12 -	796
AN960-10C	104 -	2
AN960-10L	71 -	AR
AN960-10L	13 -	393
AN960-1016	93 -	12
AN960-1216	195 -	2
AN960-1216L	95 -	2
AN960-2L	32 -	20
AN960-3	287 -	12
AN960-4	53 -	88
AN960-4C	31 -	2
AN960-4L	51 -	47
AN960-416	70 -	AR
AN960-416	3 -	501
AN960-416L	70 -	AR
AN960-416L	33 -	338
AN960-516	80 -	AR
AN960-516	8 -	104
AN960-516L	80 -	AR
AN960-516L	38 -	43
AN960-6	37 -	423
AN960-6L	73 -	47
AN960-616	5 -	49
AN960-616L	38A-	20
AN960-716	56 -	66
AN960-716C	216 -	2
AN960-716L	26 -	7
AN960-8	36 -	175
AN960-8L	36 -	151
AN960-816	70 -	98
AN960-816L	85 -	2
AN960-916	81 -	3
AN960-916L	238 -	2
AN960A10	41 -	60
AN960A4	53 -	14
AN960A416	41 -	8
AN960A416L	84 -	2
AN960A516	84 -	2
AN960A516L	187 -	12
AN960A8	141 -	14
AN960B416	153 -	2
AN960B6	171 - 7	1
AN960CU13	307 -	4
AN960C10	6 -	191
AN960C10L	28 -	103

PART NUMBER	FIGURE AND INDEX NUMBER	QUANTITY
AN960C1016	132 -	2
AN960C4	148 -	14
AN960C416	10 -	234
AN960C416L	71 -	44
AN960C516	26A-	16
AN960C516L	26A-	AR
AN960C516L	26A-	40
AN960C6	273 -	8
AN960C716	294 -	2
AN960C8	40 -	33
AN960C8L	118 -	2
AN960C816	82 -	AR
AN960C816	120 -	1
AN960D10	25 -	AR
AN960D10	1 -	1602
AN960D10L	94 -	AR
AN960D10L	9 -	662
AN960D1016	90 -	3
AN960D1216	192 -	9
AN960D1716	252 -	1
AN960D2116	252 -	2
AN960D2616	257 -	4
AN960D3	8 -	12
AN960D3016	255 -11	1
AN960D4	5 -	78
AN960D4L	171 -	AR
AN960D4L	40 -	64
AN960D416	247 -	AR
AN960D416	6 -	552
AN960D416L	38 -	111
AN960D516	26 -	159
AN960D516L	34 -	51
AN960D6	38 -	272
AN960D6L	93 -	63
AN960D616	3 -	34
AN960D616L	81 -	AR
AN960D616L	23 -	8
AN960D632	162 -	2
AN960D716	56 -	159
AN960D716L	23 -	14
AN960D8	17 -	AR
AN960D8	10 -	206
AN960D8C	156 -	1
AN960D8L	273 -	AR
AN960D8L	39 -	485
AN960D816	82 -	AR
AN960D816	6 -	33
AN960D816C	82 -	AR
AN960D816L	82 -	AR
AN960D916	67 -	68
AN960D916L	238 -12	4
AN960PD10	36 -	AR
AN960PD10	32 -	117
AN960PD10L	36 -	AR
AN960PD10L	56 -	9
AN960PD4	121 -	3
AN960PD416	6 -	18
AN960PD416L	56 -	22
AN960PD516L	60 -	5
AN960PD8	34 -	7
AN960PD916	199 -	4
AN961-10	152 -	16
AN961-4	140 -	24
AN961-416	153 -	20
AN961-6	140 -	429
AN961-616	160 -	3
AN961-8	140 -	6
AN961B616	160 -	1

PART NUMBER	FIGURE AND INDEX NUMBER	QUANTITY
AN966-416L	146 -	8
AN970-3	38 -	15
AN970-4	50 -	11
AN975-3	97 - 4	16
AN975-4	97 -	5
AN975-7	57 -	2
AN996-18	126 - 7	1
AR-4	90 -	1
AR-5	86 -	1
AR-6	90 -	1
AS313A/ARN6	289 -20	1
AS313B/ARN6	289 -	
AT-223/APG-30	292 - 8	1
AT-234/APX	296 -21	1
AT-4	82 -	
	86 -	
	86 -	4
AT-561/APG	292 -	1
AT-6	90 -	
	90 -	2
AT6P	30 -	
	30 -	2
AT715SS4	148 - 7	1
AW4-35	121 -	1
AW6-1/2-50	307 -19	2
A25K	180 -	1
A3	157 -	
	158 -	6
A30114-2	165 -51	1
A304-1	320 -29	
A3044SF-4	288 -41	
	290 - 6	
	291 - 6	
	291 - 8	
	291 -	8
A3104-1	30 -	1
A3122-10-59	201 -	1
A3122-16-59	285 -	1
A3125-2	165 -	1
A3135-SS-017-27	5 -	2
A3135-017	121 -	
	180 -	3
A3235-020	42 -	
	42 -	
	88 -	
	121 -	
	121 -	
	121 -	57
A3235-020-SS	5 -	
	31 -	
	32 -	292
A3236-020	121 -	3
A3475-020	89 -20	
	96 -	12
A4-25	180 - 6	1
A4-30	121 -	37
A4-35	121 -	5
A401B4	179 -12	1
A405	67 -	
	67 -	2
A4509A	115 - 9	
	116 -11	2
A5-30	33 -29	
	40 -	16
A5-35	142 - 3	2
A5-40	54 -	2
A5-45	121 -	
	121 -	5

PART NUMBER	FIGURE AND INDEX NUMBER	QUANTITY
A508	307 -46	1
A5506	138 -15	
	139 - 2	7
A5805-6	195 -	
A5910-6Z-3	166 -	1
A5980-8Z-3	14 -	1
A6-1/2-40	32 -	12
A6029-832-1	73 -	
	73 -	
	121 -	5
A6329	138 -13	
	139 - 5	
	139 - 8	3
A6602	138 -17	
	139 - 3	4
A6912-832-1	28 -56	2
A6939-632-062	141 -	
	299 -	6
A6939-632-125	140 -	58
A6939-632-375	141 -	
	188 -	
	228 - 5	12
B-1112X	70 -17	1
B-2816	320 -	
B-2816-OH	320 -	
B-4670	140 -	1
B-4751	140 -	1
B-4755	140 -	
	140 -	2
B-4757	140 -30	
	140 -	2
B-4760	140 -	1
B-4785	140 -	1
B-4785-1	140 -	1
B-4789	140 -	1
B-4850	140 -	
	140 -	
	140 -	3
B-4855	140 -	
	140 -	
	140 -	3
B-4880	140 -28	
	141 -22	2
B-66	89 -	4
B-6602	140 -	1
B-68	6 -	2
B-812	96 -	4
BC727	296 -	1
BJ220588	313 -21	
BJ232868-3	313 -22	
BJ232869-3	312 -12	
BL-CL4-1	120 -23	
	120 -	4
BLX-7752	70 -47	
	70 -	1
BL8-10	10 -31	2
BL8-11	10 -	
	10 -	10
BL8-4	10 -	2
BL8-5	10 -	16
BL8-7	10 -	8
BL8-8	10 -30	4
BZ-3YDT	115 -21	
	157 -12	2
BZ-3YST	157 -	
	158 -	4
BZ-7RQ1T	140 -	
	154 - 8	

PART NUMBER	FIGURE AND INDEX NUMBER	QUANTITY
BZ-7RQ1T	154 -16	
	158 -10	
	164 -21	
	164 -27	
	165 - 6	
	165 -23	
	281 - 7	11
BZ7RQ1T	289 - 1	1
B10F30	158 -51	1
B110L	284 - 3	1
B13000C	295 - 4	1
B20K	180 -	1
B4600F5/8	39A-	1
B539	70 -12	3
CA275X	159 -20	
	163 - 6	2
CCA-4850	244 -27	
	253 -59	
	258 - 3	
	258 -34	
	259 - 3	
	259 -27	11
CCA-4900	244 - 8	
	247 -42	
	253 -51	4
CE3106B-16-13S-F9	147 -15	1
CG-801/U(2-0)	292 -14	1
CG405/ARN6	289 -11	1
CG555/ARN6	289 -12	1
CG556/ARN6	289 -22	1
CJ-19931	313 -	
CJ-20588	312 -	
CJ19693LH	312 - 1	
CJ19693RH	312 -	
CJ19836	313 -	
CJ24946	313 - 1	
CJ30130	313 - 5	
CLX-32-1	69 -49	REF
	118 -55	
CLX-32-1	120 -10	
	120 -	
	120 -21	5
CLX-70-1	120 - 4	1
CM100009	271 - 1	
	271 - 9	2
CN-112/APG-30	47 -73	REF
CN-112/APG-30	292 - 2	1
CP53B2EB405K	153 -52	
	156 - 9	
	172 -21	3
CQA49470	291 -	
CR18U	288 -	
	288 -	
	288 -	
	288 -	
	288 -	
	288 -	6
CT25239	313 -20	
C100B9R5SH	140 -33	1
C1006	142 - 8	1
C1128/APX-25	288 - 7	1
C1158/APX-25	288 - 8	1
C124	162 - 9	1
C149	307 -	2
C3100DB3	140 -20	1
C330-LA	162 -27	1
C403A	288 -10	1
C403A/A	288 -	

PART NUMBER	FIGURE AND INDEX NUMBER	QUANTITY
C5037/ARC502	288 - 3	1
C6334-11	139 -42	REF
C6334-11	138 - 6	
	139 -36	4
C6334-16	139 -24	1
C6334-28	139 -14	1
C6766-3-105	153 -	1
C6766-3-70	176 -	
	176 -	
	185 -	3
C6808-3	139 -29	1
C8001-1	263 -23	
	305 -15	4
C8001-3	309 -42	8
C883	279 -14	1
C885	272 -42	1
D-1010	128 -	
D-380-1	163 -	1
D-5530	152 -	1
DC-151	285 - 2	1
DJ38390	313 -19	
DPR-205	297 -36	4
DW5	126 -13	1
DY21/ARC3	289 -47	1
DY22/ARC3	289 -48	1
D1000	236 - 1	1
D103	219 -21	1
D1940	236 -	
D6-1001-3N	130 -34	REF
D6-1001-3N	125 -47	4
D6-1001-5N	125 -46	2
D800	180 -11	1
EA-1478	147 - 4	1
EA-1479	146 -	1
EA-1480	145 - 7	1
EA-1481	143 -	
	143 -	2
EA-17638-3	143 -	1
EA-370A-1056	147 -	1
EA-370A-1056M	147 -	1
EA-370C-1057	146 -	1
EA-370C-1057M	146 -	1
EA-378A-545	144 - 3	
	145 - 1	2
EA-378A-545M	144 -	
	145 -	2
EA-378A-546	144 -10	
	145 - 6	2
EA-378A-546M	144 -	1
EA-378A546M	145 -	1
EA-379AC-547A	143 -	1
EA-379AC-547AM	143 -	1
EA-56594	143 -	1
EA-6548	143 -	1
EA-6555	143 -	1
EA-721-G-1	140 -67	1
EA-881A-788A	147 - 1	1
EA-909E2-A-1	143 -16	1
EA125	152 -17	1
EA1480	144 -11	1
EB-048	9 -	2
EB-054	20 -70	
	20 -75	16
EB-064	20 -80	
	20 -85	16
EB-070	98 -	24
EB-080	6 -	
	6 -	

PART NUMBER	FIGURE AND INDEX NUMBER	QUANTITY
EB-080	9 -	24
EB-098	26 -	2
EB-108	26 -	2
EO 271651-1	31 -	1
EO256773-3	293A-	2
EO320636-10	121 -	1
EQ1009D	83 -	
	95 -	3
EWB-18-5-24	20 -	
	20 -	
EWB-18-6-24	20 -	
	20 -	
EWB-18-7-14	2 -	
EWB-18-8-17	2 -	
EWB-7-42	92 -	2
E1001	307 -37	2
E1002	307 -	2
E1003	307 -	2
E1005	307 -40	
E1007	307 -38	1
E1008	307 -41	3
E1028	307 - 9	1
E1201	307 -	1
E1201-10	307 -	1
E1201-11	307 -	1
E1201-13	307 -45	1
E1201-3	307 -	1
E1201-7	307 -47	1
E1201-9	307 -	1
E1601	307 -	1
E1601-11	307 -27	1
E1601-19	318 - 1	
E1686	307 -	2
E1687-3	307 -	2
E1687-5	307 -	2
E1688	307 -36	2
E1690	307 -26	1
E1691	307 -	2
E1693	318 - 7	
E1696	307 -	1
E1697	307 -32	1
E882	307 -35	5
E974	318 - 9	
E975	318 -10	
E976	318 -11	
E978-1	307 -33	1
E978-2	307 -	1
E992	307 -39	1
F-7097	258 -	
	259 -46	4
FA5-35	5 -44	
	5 -48	
	32 -	
	32 -	
	32 -	
	32 -	
	32 -	
	32 -	
	32 -	
	32 -	
	32 -	
	32 -	
	61 -12	
	73 -	90
FA5-40	32 -	
	32 -	
	32 -	
	32 -	

PART NUMBER	FIGURE AND INDEX NUMBER	QUANTITY
FA5-40	32 -	28
FA5-45	32 -	4
FA5-50	32 -	4
FCA-16623	245 -21	
	248 -21	39
FJ5-190	33 -30	2
FJ5-50	33 -49	2
FLLB	152 - 1	
	152 -43	2
FLLE	163 - 5	
	163 -12	2
FL3C3	200 - 4	
	210 - 8	2
FL34-14	194 -	1
FSH	152 -	
	163 - 4	2
F137	153 -	1
F137-1	153 -	
F150	315 -	
F245/APX-25	289 -50	1
F3I-14	190 -	
	190 -	2
F300	315 -	
F300-1	315 -	
F34-14	70 -	
	154 -33	
	218 -	4
F4W-19	262 -38	2
F45-19	220 - 2	2
F50	315 - 1	
F600-1	315 -	
G-25	321 -21	
G-4710A	152 -	1
G-54226	185 -22	1
GA4-250 .	109 -	
	109 -	16
GA5-312	33 -	
	54 -	
	142 -	8
GA6-1/2-375	32 -	
	307 -	14
GE9890473G3	148 - 3	1
GE9892150G1	148 - 2	1
GE9892150G2	148 - 1	1
GE9892806G1	148 -12	1
GE9894733	148 -	1
GF5-175	5 -	
	5 -	
	32 -	
	32 -	
	32 -	
	32 -	
	33 -	
	61 -	
	73 -	68
GQ1585	122 - 1	1
GQ192	122 - 7	1
GSF5-T-250	33 -	2
GT29399	314 - 1	
GT29400	314 - 2	
GT994320	312 - 3	
GT994424	321 - 2	
G20C26	282 -14	1
G23103	316 - 9	
H-250LC	297 -13	AR
H-250RC	297 -	AR
H-5000-2-064-125	74 -	1
HA6R1	23 -	

PART NUMBER	FIGURE AND INDEX NUMBER	QUANTITY
HA6R1	23 -	
HA6R2	23 -	
	23 -	
HC1560	155 -14	
	158 -31	2
HE-5	238 -	
HF-3	194 -	1
HF-4	38 -	2
HF-5	238 -19	2
HF13021-288	317 - 4	
HF13021-309	318 -12	
HF13021-311	318 -13	
HF13021-315	318 -14	
HF13039-108	318 -15	
HF13039-110B	313 -10	
HF13039-36	318 - 2	
HF19684	312 -13	
HF19849	318 -16	
HF19888	318 -17	
HF21828	312 -14	
HF21859	312 -15	
HF22380	321 -20	
HF22571-1	321 -19	
HF22571-2	321 -	
HF22571-4	321 -	
HF22687	314 - 3	
HF22688	314 - 4	
HF22733	317 - 1	
HF22978	317 - 2	
HF23004	314 - 5	
HF23414	318 - 3	
HF23414-201	318 - 4	
HF26267	322 - 5	
HF27705	317 - 5	
HF29297	322 -14	
HF29524	313 - 2	
HF29785	321 - 3	
HF29822	314 - 6	
HF29823	314 - 7	
HF29824	314 - 8	
HF30117	312 -	
HF31553	317 - 6	
HF32047	317 - 7	
HF35319	317 - 3	
HF42673	318 - 5	
HKP	153 -41	
	157 -	
	162 -	
	292 -	
	293A-	
	296 -	37
HL1C1032SP	110 -	
	111 -	2
HM-5	238 -18	2
HRBM3E	90 -62	2
HRBM4E	90 -58	2
HSBG10SA	242 -	
	242 -	2
HSB10C	65 -	2
HSB12C	65 -	2
HSB3S	82 -29	
	88 -	2
HSB7C	91 -	1
HS12-15	9 -	4
HS15-10	9 -	18
HS39-10-22	9 -	8
HS39-10-23	9 -	10
HS39-12-24	9 -	4

PART NUMBER	FIGURE AND INDEX NUMBER	QUANTITY
H5000-064-064	38 -	1
H5000-064-125	77 -41	4
H5000-072-125	254 -14	1
H5000-125-125	63 -47	2
H5000-2-091-218	252 -53	2
H5000-2091-125	12 -20	4
JA7531-FS3056-3	293A-17	1
JJ-033	168 - 9	
	169 -10	16
JV5	125 -34	
	134 -30	
	173 -36	3
JV7	273 -	1
J5007/ARC502	289 -46	1
K-1339-16-1	245 -	
	252 -	
K-1880-D	249 - 8	1
KM610-64	33 -37	2
KM680	62 -	2
KP3	102 - 8	
	102 -	2
KY95/APX-25	289 -54	1
KY95A/APX-25	289 -	
K114	141 -	2
K13-017-2	108 -	2
K13-017-4	108 -53	2
K13-040-8	108 -	
	108 -	3
K13-054	1 -	1
K13-069	1 -	1
K13-069-801	1 -	1
K13-069-803	1 -	
K13-091-3	255 - 3	1
K13-094-5	108 -	4
K13-095-5	108 -	4
K13-105-4	118 - 3A	12
K13-106-4	289 -	1
K13-106-6	289 -	1
K13-106-8	289 -	2
K13-114-2	71 -54A	2
K13-114-4	71 -	AR
K13-116-3	78 -	1
K13-116-5	78 -	1
K13-116-7	78 -	1
K13-116-9	78 -	1
K13-120	1 -	REF
K13-120	26A-	1
K1339-16-1	250 -	
K14	11 -	8
K1401	293 -	4
K21507	314 -14	
K500-6-L	297 - 8	3
K500-6-R	297 -	3
K7128081-P1	289 -16	1
L-112DH	315 -	
L-72H	315 -21	
LA17491	292 -	
	292 -	7
LB3A	297 -12	3
LC19287	292 -16	1
LC19288	292 -10	1
LSS4	26A-	2
LSS5	27 -	2
LSS6B	23 -30	
	23 -58	16
LS3	87 -	
	87 -	2
L112D	315 -20	

PART NUMBER	FIGURE AND INDEX NUMBER	QUANTITY
L170-14006-141	14 -	
L170-14006-142	14 -	
L9058	115 - 8	
	116 -10	2
M-297	290 -	
	290 -	
	291 -	
M-3320	23 -81	REF
M-3320	128 -18	1
M-3357M1	65 -35	REF
	128 -25	
M-3357M1	130 -31	1
M-3522-M3	130 -40	REF
M-3522-M3	128 -19	2
M-359A	288 -	
	289 -	
	289 -	8
M-3889-79.60	128 -	
MBH1731	140 -	1
MC-136	289 -	1
MC1600-17-5	299 -26	1
MC1613-1750	299 -	
MD2721	112 -20	1
MD36-14	97 -	
	97 -23	4
MIL-A-5125(USAF)	140 -	
	140 -	
MIL-A-5885	141 -	1
MIL-A-5885A(3)	140 -27	1
MIL-C-5041	93 -25	2
MIL-C-5816	289 -13	1
MIL-C-5816A	289 -	
MIL-C-6231	146 -	
MIL-C-7050	157 -	
MIL-C5041	82 -62	1
MIL-L-1140	106 -	AR
MIL-L-6484A	157 -31	1
MIL-R-6467	185 -	
MIL-R-8373	176 -	
MIL-S-5733	309 -16	16
MIL-T-5014	93 -	2
MIL-V-9370	285 -18	1
MIL-1-5126A(USAF)(1)	140 -62	1
MIL-1-5356(USAF)(3)	140 -31	1
MIL-1-5892A	140 -	1
MODEL M3	297 - 1	6
MODEL PH-25-1-MX	322 - 4	
MST28064	315 -	
MST29072	314 -	
MST30680	314 - 9	
MST30993	314 -10	
MST31005	314 -18	
MST31006	314 -19	
MST31032	314 -20	
MST31033	314 -21	
MST31035	321 -22	
MST31036	315 -	
MST31036-101	315 -22	
MST31036-102	315 -23	
MST31037	314 -17	
MST31038	314 -11	
MST31039	314 -22	
MST31040	314 -12	
MST31042	312 -16	
MST31100	322 - 3	
MST31123	321 -23	
MST31137	314 -13	
MST31571	322 -13	

PART NUMBER	FIGURE AND INDEX NUMBER	QUANTITY
MST34775	314 -15	
MST36631	314 -23	
MST36632	314 -24	
MST39936	314 -25	
MST40108	314 -31	
MST40109	314 -29	
MST40110	314 -30	
MST40317	315 -24	
MST40318	315 -25	
MST43305	314 -26	
MS15001-1	87 -	1
MS20001PY4-450	108 -54	2
MS20001PY6-450	108 -52	2
MS20002-8	2 -	6
MS20002-9	2 -	6
MS20002C6	298 -	18
MS20822-4D	150 -14	4
MS20822-6B	121 -	2
MS21919DG16	69 -	2
MS21919DG17	289 -	1
MS21919DG20	288 -	1
MS21919DG30	292 -	1
MS21919DG4	198 -	2
MS21919DG6	198 -45	1
MS21919DG7	299 -63	1
MS21919DG8	69 -	4
MS21919H32	255 -16	3
MS21919H40	107 -	3
MS21919WDG10	158 -23	5
MS21919WDG12	169 - 1	1
MS21919WDG2	161 -	1
MS21919WDG3	173 -39	3
MS21919WDG4	169 - 2	
	277 -	12
MS21919WDG5	169 -32	8
MS21919WDG6	86 -	4
MS21919WDG8	169 -	6
MS24350-3	285 -	
MS25005-10	183 -	
	183 -	
MS25005-15	183 -	
MS25005-20	183 -	
MS25005-25	183 -	
MS25005-5	183 -	
MS25010-2	178 - 3	
	182 -	5
MS25128-2	182 -	
MS28005-1	102 -19	
	103 -10	2
MS28005-5	143 -	
	147 - 9	1
MS28010-1	140 -76	1
MS28010-5	140 -	
MS28025	140 -	
	141 -	
MS28033-1	140 -	
MS28720-6	208 - 7	
	210 -	
	230 - 1	3
MS28720-8	59 -51	REF
MS28720-8	193 -47	1
MS28741-12-0184	104 - 2	
	105 - 2	2
MS28741-12-0280	104 -11	
	105 - 9	2
MS28741-12-0300	269 -48	REF
MS28741-12-0300	104 -31	
	105 -31	2

PART NUMBER	FIGURE AND INDEX NUMBER	QUANTITY
MS28741-16D-0140	269 -	1
MS28741-16D-0160	269 -27	1
MS28741-20-0242	256 -26	REF
MS28741-20-0242	253 -40	1
MS28741-4-0084	188 -11	1
MS28741-4-0100	188 -37	1
MS28741-4-0110	143 -24	REF
MS28741-4-0110	200 -34	
	201 - 8	
	201 -10	
	201 -46	7
MS28741-4-0120	216 -12	REF
MS28741-4-0120	104 -30	
	105 -30	
	188 -26	
	188 -48	4
MS28741-4-0130	212 -	
MS28741-4-0144	282 -30	1
MS28741-4-0170	200 -35	1
MS28741-4-0180	147 -20	REF
MS28741-4-0180	209 -15	1
MS28741-4-0190	201 -42	2
MS28741-4-0220	308 -32	1
MS28741-4-0260	201 -	2
MS28741-4-24	120 -14	1
MS28741-4-30	120 -18	5
MS28741-4-43	120 -13	1
MS28741-5-15	282 -21	1
MS28741-6-0176	40 -31	2
MS28741-6-0240	308 -20	1
MS28741-6-0260	104 -	
	105 - 3	2
MS28741-6-0274	104 -17	
	105 -16	2
MS28741-6-0294	104 - 3	1
MS28783-14	225 -	
MS29512-10	244 -	1
MS29512-12	249 -	3
MS29512-16	245 -	6
MS29512-2	245 -	1
MS29512-20	249 -	2
MS29512-3	144 -14	2
MS29512-4	284 -	1
MS29512-6	253 -	4
MS29513-10	268 -	12
MS29513-11	246 -	4
MS29513-12	268 -	10
MS29513-123	247 -21	2
MS29513-128	244 -	1
MS29513-13	268 -	8
MS29513-210	248 -	16
MS29513-225	248 -	6
MT-1151/APX-25	289 -51	1
MT-5004/APG-501	292 -	1
MT-708/APG-30	292 - 1	1
MT-709/APG-30	292 -30	1
MT-739/U	292 -26	1
MTH-4	293A-24	2
MTH-5	293A-	2
MT236/ARC3	289 -45	1
MT274A/ARN6	289 -	1
MT274B/ARN6	289 -	
MT274C/ARN6	289 -	
MY28	321 - 4	
M1593	296 -	2
M2881-5C-A1	287 -	1
M3A	298 -	6
M3B	298 -	

PART NUMBER	FIGURE AND INDEX NUMBER	QUANTITY
M3B	298 -	2
M34-14	97 -14	
	97 -33	6
M9801	293A-	
NAF212938-1	309 -	
NAS120B125	273 -13	1
NAS123B-125	182 -38	1
NAS123R125	190 -45	1
NAS143-10	26 -	4
NAS143-10C	26 -	2
NAS143-4	9 -	4
NAS143-4C	9 -	4
NAS143-6C	27 -	6
NAS143-7	92 -	2
NAS143-7C	56 -	9
NAS143-8	2 -	8
NAS143-8C	6 -13	24
NAS143-9	2 -	4
NAS143-9C	26 -	2
NAS144-15	254 -	12
NAS144-18	60 -	2
NAS144-20	132 -13	10
NAS144-30	9 -33	2
NAS144-41A	28 -64	REF
	28A-66	
NAS144-41A	26 - 8	2
NAS144DH12	241 -	
NAS144DH17	241 -	3
NAS145DH16	264 - 8	2
NAS145DH18	267 -	2
NAS146-22	268 -52	8
NAS146-26	298 -33	6
NAS146-27	27 -37	4
NAS146-28	298 -	2
NAS146-30	298 -34	8
NAS146-32	298 -36	2
NAS146-52	18 -13	18
NAS146DH20	268 -31	2
NAS147-24	56 -	4
NAS147-28	56 -	4
NAS147-29	268 -51	8
NAS148-29	6 -20	8
NAS148-30	6 -12	8
NAS148-65	9 -34	8
NAS148DH21	264 -12	4
NAS149-29	26 -12	2
NAS149-30	2 -14	4
NAS149-32	2 -15	4
NAS150-31	26 -11	2
NAS152-37	2 -17	2
NAS152-37DH	2 -20	2
NAS178-6-5	9 -	24
NAS178-8-5	11 -16	8
NAS179-6	9 -	24
NAS179-8	11 -	8
NAS183-3-6	136 - 6	2
NAS183-3-6A	136 -	2
NAS2-101	84 -11	52
NAS2-201	85 -	4
NAS2-201A	232 -17	2
NAS200-1032-10	30 -46	8
NAS200-440B4	248 -40	36
NAS200-632BC8	7 -	6
NAS202-832-B6	150 -	1
NAS202-832-20	136 -33	2
NAS202-832-8	36 -	10
NAS204-13	99 -	4
NAS204-14	99 - 8	2

PART NUMBER	FIGURE AND INDEX NUMBER	QUANTITY
NAS204-15	5 -67	2
NAS204-8	36 -31	7
NAS205-10	77 -	18
NAS205-11	12 -22	4
NAS205-16	85 -	2
NAS205-18	86 -22	3
NAS205-27	10 -19	8
NAS205-35	5 -66	6
NAS205-8	77 -56	25
NAS205-9	29 -	111
NAS206-13	38A-12	28
NAS206-14	10 -	2
NAS206-15	10 -12	7
NAS206-17	43 -30	2
NAS206-35	62 -	4
NAS206-45	89 -	2
NAS206-46	89 -19	2
NAS220-10	51 -	6
NAS220-11	10 -27	8
NAS220-13	38 -	20
NAS220-16	295 -20	1
NAS220-24	263 -26	4
NAS220-29	309 -46	16
NAS220-7	36 -36	26
NAS220-8	39 -	148
NAS220-9	36 -30	44
NAS221-10	1 -	
	32 -	409
NAS221-11	6 -11	99
NAS221-12	9 -	78
NAS221-13	3 -43	83
NAS221-14	9 -	31
NAS221-15	10 -37	12
NAS221-16	118 -	5
NAS221-17	10 -36	13
NAS221-18	10 -	13
NAS221-19	18 -33	32
NAS221-20	266 -	6
NAS221-21	118 -	2
NAS221-23	53 -22	7
NAS221-24	119 -	1
NAS221-25	123 -26	4
NAS221-26	123 -	2
NAS221-27	119 -	1
NAS221-31	286 - 3	2
NAS221-32	188 -	1
NAS221-39	267 -24	2
NAS221-45	268 -	2
NAS221-5	109 -	12
NAS221-6	35 -37	16
NAS221-62	113 -32	2
NAS221-7	114 -	10
NAS221-8	24 -	158
NAS221-9	3 -	125
NAS222-10	56 -	1
NAS222-11	4 -	123
NAS222-12	4 -	234
NAS222-13	8 -20	6
NAS222-14	9 -	10
NAS222-15	43 -31	3
NAS222-16	10 -33	8
NAS222-17	10 -	6
NAS222-18	43 -	6
NAS222-19	10 -	8
NAS222-20	71 -	2
NAS222-21	298 -	4
NAS222-28	38A-11	2
NAS222-29	136 -14	1

PART NUMBER	FIGURE AND INDEX NUMBER	QUANTITY
NAS222-30	38 - 5	2
NAS222-9	245 -43	64
NAS223-13	118 -15	11
NAS223-9	265 -23	4
NAS224-10	268 -32	2
NAS225-5	10 -	10
NAS25-3KL	62 -	4
NAS25-3KR	62 -	4
NAS25-3L	269 -19	2
NAS25-3R	269 - 9	2
NAS27-3-18	217 -12	2
NAS27-3-20	269 -17	4
NAS3-3-8	120 -	4
NAS334-34	222 - 3	4
NAS334A14	133 - 9	1
NAS335-32	26A-35	2
NAS335A10	38 - 6	12
NAS335A11	38 -10	2
NAS335A7-5	268 -47	20
NAS336A11	320 - 4	
NAS337A13	98 -20	16
NAS338A14	98 -21	14
NAS376-2	10 -	8
NAS376-4	10 -	4
NAS42C10-8	124 -	4
NAS42C5-22	124 -	2
NAS42C5-6	45 -	4
NAS42C8-64	269 -10	4
NAS42DD-4-12	263 -	2
NAS42DD-6-32	125 -	6
NAS42DD3-40	38 -	2
NAS42DD4-13	279 -	1
NAS42DD4-28	51 -	1
NAS42DD4-4	153 -	8
NAS42DD4-56	10 -	2
NAS42DD4-6	71 -	15
NAS42DD4-7	121 -	3
NAS42DD5-16A	142 - 4	2
NAS42DD5-6	280 -	1
NAS42DD6-56	290 -	1
NAS42HT4-8	118 -	2
NAS424-4	191 -	1
NAS424-6	208 -18	2
NAS427K12	132 -39	8
NAS427K16	128 -15	6
NAS427K8	69 -	3
NAS427K9	17 - 4	21
NAS427T12	38 -	2
NAS427T16	137 -21	2
NAS427T17	137 -	2
NAS427T6	132 -38	8
NAS427T8	261 -41	2
NAS428-3-10	262 -12	8
NAS428-3-12	139 -18	1
NAS428-3-22	293 -20	2
NAS428-3-7	98 -28	2
NAS428-4-12	131 -28	2
NAS428-4-14	137 - 7	2
NAS428-4-7	6 -10	4
NAS428H3-7	98 -	2
NAS428H4-7	243 -38	4
NAS43-0-8	53 -	6
NAS43-3-12	201 -	2
NAS43-3-14	118 - 7	4
NAS43-3-16	118 -	5
NAS43-3-20	119 -	1
NAS43-3-24	118 -	2
NAS43-3-32	198 -	2

PART NUMBER	FIGURE AND INDEX NUMBER	QUANTITY
NAS43-3-40	118 -	1
NAS43-3-44	119 -	2
NAS43-3-54	273 -	1
NAS43-3-56	53 -21	2
NAS43-3-6	118 -	2
NAS43-3-68	34 -	2
NAS43-3-74	119 -	1
NAS43-3-8	118 -	8
NAS43-3-88	162 -	1
NAS43-4-12	305 -	2
NAS43-4-24	173 -25	2
NAS43-4-44	144 - 7	28
NAS43-5-10	118 -	1
NAS43-5-12	119 -	1
NAS43-5-76	265 -	4
NAS43-7-16	34 -	2
NAS43-8-20	118 -	1
NAS43C-1-10	138 -	1
NAS43C-3-10	305 -	1
NAS43C-3-12	138 -	3
NAS43C-3-16	153 -	11
NAS43C-3-24	153 -	1
NAS43C-3-25	305 -	8
NAS43C-3-46	41 -	1
NAS43C-3-56	305 -	1
NAS43C-3-6	154 -	2
NAS43C-3-60	305 -	1
NAS43C-3-64	119 -	2
NAS43C-3-66	264 -32	4
NAS43C-3-8	118 -	14
NAS43C-3-96	269 -16	4
NAS43C-4-15	293 -	2
NAS43C-5-88	305 -	4
NAS43C1-20	82 -17	4
NAS43C3-14	94 -13	2
NAS43C3-16	42A-15	1
NAS43C3-19	305 -28	1
NAS43C3-30	94 -	4
NAS43C3-32	94 -17	8
NAS43C3-6	69 -29	6
NAS43C3-7	261 -16	4
NAS43C4-24	115 - 5	4
NAS43C4-96	34 -45	1
NAS43DD-1-10	157 -	2
NAS43DD-1-16	157 -	4
NAS43DD-1-32	164 -	4
NAS43DD-1-64	299 -	4
NAS43DD-3-10	152 - 3	3
NAS43DD-3-12	203 -	11
NAS43DD-3-128	267 -	2
NAS43DD-3-13	157 -	8
NAS43DD-3-16	157 -	12
NAS43DD-3-18	135 -	1
NAS43DD-3-20	135 -	5
NAS43DD-3-22	170 -	6
NAS43DD-3-24	153 -	27
NAS43DD-3-28	190 -	2
NAS43DD-3-30	304 -	1
NAS43DD-3-32	125 -	16
NAS43DD-3-36	196 -	7
NAS43DD-3-4	139 -	2
NAS43DD-3-40	124 -	6
NAS43DD-3-43	210 -	1
NAS43DD-3-46	303 -	1
NAS43DD-3-48	158 -	7
NAS43DD-3-5	157 -	2
NAS43DD-3-52	158 -	2
NAS43DD-3-56	153 -	10

PART NUMBER	FIGURE AND INDEX NUMBER	QUANTITY
NAS43DD-3-58	153 -	1
NAS43DD-3-6	158 -	1
NAS43DD-3-61	261 -	2
NAS43DD-3-64	164 -	4
NAS43DD-3-65	263 -	2
NAS43DD-3-72	202 -	3
NAS43DD-3-74	164 -	3
NAS43DD-3-8	135 -	22
NAS43DD-3-80	150 -	3
NAS43DD-3-86	268 -	2
NAS43DD-4-20	158 -	2
NAS43DD-4-26	222 -	4
NAS43DD-4-32	193 -	2
NAS43DD-4-34	241 -	1
NAS43DD-4-38	194 -	1
NAS43DD-4-40	186 -17	7
NAS43DD-4-56	303 -24	1
NAS43DD-4-8	182 -34	13
NAS43DD-5-11	268 -	4
NAS43DD-5-20	163 -	2
NAS43DD-5-31	248 -	4
NAS43DD-5-32	124 -18	2
NAS43DD-6-18	139 -	1
NAS43DD1-10	162 -	3
NAS43DD1-8	140 -	5
NAS43DD3-12	172 -	3
NAS43DD3-13	142 -	3
NAS43DD3-14	301 -	4
NAS43DD3-16	63 -	15
NAS43DD3-174	82 -10	1
NAS43DD3-18	113 -33	2
NAS43DD3-20	100 -	6
NAS43DD3-22	218 -	1
NAS43DD3-24	82 - 5	4
NAS43DD3-28	188 -	2
NAS43DD3-30	152 -	2
NAS43DD3-32	128 -	8
NAS43DD3-36	114 -38	2
NAS43DD3-38	152 -	1
NAS43DD3-48	91 -	4
NAS43DD3-49	132 -36	2
NAS43DD3-52	91 -	1
NAS43DD3-54	113 -34	2
NAS43DD3-57	114 -39	2
NAS43DD3-64	173 -	2
NAS43DD3-74	165 -	2
NAS43DD3-8	173 -	4
NAS43DD3-84	161 -	1
NAS43DD3-96	151 -	1
NAS43DD3-97	34 -15	2
NAS43DD4-28	308 - 5	4
NAS43DD4-40	65 -	1
NAS43DD4-8	65 -	1
NAS43DD5-16	218 -	1
NAS44-416P2	176 -18	1
NAS44-616P2	172 -	1
NAS45-2-11	153 -47	3
NAS45-6-1	71 -32	1
NAS45-6-10	288 -	1
NAS45-6-13	288 -	10
NAS45-6-14	53 -41	3
NAS45-6-16	53 -	3
NAS45-6-2	296 - 7	1
NAS45-6-4	45 -	2
NAS45-6-9	288 -	1
NAS460-516	134 -14	1
NAS460-616	134 -10	1
NAS464-3A6	56 -28	12

PART NUMBER	FIGURE AND INDEX NUMBER	QUANTITY
NAS464-3A9	56 -	4
NAS464-4-12	132 -25	1
NAS464-4-14	125 -26	4
NAS464-4-19	28 -65	REF
	28A-67	
NAS464-4-19	26 -10	5
NAS464-4-39	134 -	1
NAS464-4-4	125 -29	2
NAS464-4-47	134 -35	1
NAS464-4-6	122 - 5	2
NAS464-4A-10	241 - 9	2
NAS464-4A-13	102 -	
NAS464-4A-15	241 -	2
NAS464-4A-4	125 -	4
NAS464-4A9	241 -27	2
NAS464-5-26	26A-12	2
NAS464-6-13	57 -	2
NAS464-6-36	267 -28	2
NAS464-6A40	6 -26	2
NAS464-6A41	129 -17	2
NAS464-7-14	201 -	2
NAS464-7-16	56 -37	1
NAS464P3-11A	24 -	14
NAS464P3-13	83 -31	2
NAS464P3-7A	24 -	12
NAS464P8-24	6 -46	REF
NAS464P8-24	129 -15	2
NAS50-118	70 -11	4
NAS50-137	127 - 9	2
NAS50-145	242 -21	2
NAS50-175	219 -24	1
NAS50-68	26A-20	2
NAS50-75	87 -11	2
NAS50-87	233 - 8	10
NAS501-3-5A	18 -	4
NAS509-5	134 -	3
NAS51-200	57 -14	2
NAS51-31	95 -39	4
NAS51-75	320 - 9	
NAS51-87	164 -	3
NAS54A4	165 -	1
NAS559-1	134 -15	1
NAS559-4	242 -	1
NAS679-A3	91 -	7
NAS679-A4	91 -	1
NAS72-3-005	92 - 9	6
NAS72-3-006	90 -	1
NAS72-3-009	100 -	5
NAS72-3-113	79 -	2
NAS72-4-005	87 -19	1
NAS72-4-010	85 -33	1
NAS72-4-014	81 -11	2
NAS72-4-015	81 -13	3
NAS72-4-102	97 -39	2
NAS72-4-315	79 -	2
NAS72-5-010	92 -13	2
NAS72-6-104	85 - 6	1
NAS72-6-108	85 -22	1
NAS72-7-113	207 - 4	2
NAS72-7106	263 - 3	4
NAS73-3-012	100 -38	1
NAS73-3-950	136 -44	2
NAS74-3-015	218 - 7	1
NAS75-10-016	119 -	4
NAS75-3-016	79 -	3
NAS75-3-130	79 -	2
NAS75-4-027	33 -42	2
NAS75-4-119	91 -13	1

PART NUMBER	FIGURE AND INDEX NUMBER	QUANTITY
NAS75-6-023	100 -37	1
NAS75-6-127	79 -	2
NAS75-8-119	91 -11	1
NAS75-9-016	90 -	1
NAS76A5-024	92 - 7	2
NAS76A6-011	90 -	1
NAS77-11-50	98 -23	4
NAS77-4-30	153 -	4
NAS77-4-68	90 -	1
NAS77-5-28	86 -	1
NA2-3036B	165 -61	2
NMJ-02	289 -	16
N151-24002-13	30 -13	1
P-25-K	180 -	
PC3-1/2	288 -	10
PDA-35	175 - 5	
	175 -14	10
PDLM-105	153 -37	1
PDLM-70	176 -16	
	176 -17	
	185 -18	3
PE-R-248-1	312 - 4	
PE-2503-101H	322 -11	
PE-2503-207H	321 - 6	
PE-2503-211H	322 - 1	
PE-2503-217H	322 - 6	
PE-2503-236H	322 -17	
PE-2503-31M	322 -10	
PE-2503-33H	322 - 2	
PE-2504-117-M	318 - 8	
PE2503-249M	313 -11	
PE2503-249M-207	313 -12	
PE2503-89H	321 - 5	
PF24-3906-20BCE-2	236 -	1
PF24-3906-20BCE-4	236 - 3	1
PF3-1/2-38	288 -	10
PG208B7	276 - 2	1
PJ068	309 -50	8
PK54Z-2-5	115 -42	
	116 -47	4
PK79XZ-4-5	114 -	2
PK79XZ-6-11	166 -	1
PK79XZ-6-6	38A-	4
PK79XZ-8-8	253 -	2
PK79XZ6-20	166 -	1
PL-148A	289 -	1
PL-151A	288 -	1
PL-153A	288 -	
	289 -	2
PL-259A	288 -	
	288 -	
	289 -	5
PL-274	288 -42	
	289 -	2
PL68	309 -	
PP-493/APG-30	292 -27	1
PP-5041/APG-501	292 -	1
PR-10-F	158 -	
	165 -43	
PR-20-K	180 -	
PSA-10	160 -16	1
PSA-25	176 -10	1
PSA-5	160 -	1
PS3-1/2	288 -	10
QS200-M16S	287 -	
	287 -	3
RA-2258-2	303 - 6	1
RA-2258-3	100 -58	

PART NUMBER	FIGURE AND INDEX NUMBER	QUANTITY
RA-2258-3	100 -64	
	101 -	5
RA-2482-2	98 -38	2
RA-2487-2	68 - 2	
	69 - 2	
	82 -23	
	98 -	
	119 -19	
	168 -	
	169 -	
	307 -	32
RA-2487-3	112 -	
	113 -	
	114 -	
	186 -	4
RA-2494-2	303 - 4	
	304 -	2
RA-2500-2	68 -	
	69 -	14
RAD207SB-7.5	248 -28	
	249 -39	6
RBA-143-16	84 -	3
RB3A	297 -	3
RCAF REF 12C/293	122 -	2
RCAF REF 6A/10062	140 -44	1
RCAF REF 6A/1299	140 -58	1
RCAF 15E/63	122 - 2	1
RD104SH-5L	125 -	
	294 - 3	7
RD205SH-5.5L	6 -	
	137 - 3	
	139 -	
	245 -27	9
RD206SH-6.5L	131 -26	
	132 - 7	
	245 -26	
	311 -	10
RD208SH-9L	268 -	4
REB3N	90 -47	
	90 -51	2
REB3N-4630	30 -58	1
REF 32E/89	68 -	AR
	69 -	
RE3F4	138 - 7	
	139 -37	5
RE3H5E4630	30 -56	1
RE4F5	112 -36	
	112 -	
	125 -	
	133 - 8	
	134 -16	11
RF39539	313 -14	
RJ98412	312 -	
RL124SH-12	298 -	6
RL21SB-6	9 -	
	11 -21	
	14 -	
	14 -50	
	14 -57	
	14 -	
	14 -69	
	125 -	
	294 - 2	
	309 -	99
RL24SB-7	6 -	
	137 - 4	
	139 -	
	245 -	9

PART NUMBER	FIGURE AND INDEX NUMBER	QUANTITY
RL27SB-8	311 -	2
RL28SB-8	131 -27	
	132 - 8	
	136 -29	
	245 -	12
RL31SB-9	133 -	1
RL33SB-9	248 -27	
	249 -	6
RL38SB-9	268 -	4
RL72SB-11	9 -	2
RT-181/APG-30	292 -31	1
RT-5005/APG-501	292 -	1
RT279/APX-25	296 -	
RT279A/APX-25	296 -12	1
RT82/APX-6	289 -57	REF
RW30J2R0	163 -21	1
RZA10020	298 - 9	6
R101A/ARN6	289 - 8	1
R104SH-5	9 -	
	11 -22	
	14 -	
	14 -40	
	14 -49	
	14 -56	
	14 -	
	14 -68	32
R104SH-5L	309 -	64
R206SH-8	136 -28	4
R207SB-9	133 - 2	1
R21SB-6	14 -41	4
R312SH-16	9 - 4	2
R4G	74 -	
	108 -	3
R5009/ARC502	288 -35	1
S.P.1561-10-32-13	267 - 8	12
S.P.1561-10-32-8	267 -19	8
S.P.1561-8-32-11	5 -62	71
S.P.1561-8-32-13	5 -63	2
S.P.1561-8-32-8	2 -24	
	5 -61	
	121 -	
	264 -	
	264 -26	
	264 -29	103
S-1191	16 -	
	16 -	
	32 -	
	32 -	
	32 -	
	32 -	
	32 -	10
S-1192-1-3	16 -	2
S-1192-1-4	32 -	
	73 -	3
S-1192-1-6	110 -15	
	110 -25	
	111 -24	
	111 -34	7
S-1192-1-7	32 -	
	32 -	
	32 -	
	32 -	5
S-1192-2-7	32 -	
	32 -	
	32 -	
	75 -	5
S-1193	60 -15	2
S-1224-10-7	55 -24	2

PART NUMBER	FIGURE AND INDEX NUMBER	QUANTITY
S-1236-516	80 -	AR
S-1236-516	80 -	2
S-1236-516L	80 -	AR
S-1245-1-16	156 -	
S-1245-1-2	165 -28	1
S-1245-1-4	164 -15	1
S-1245-1-5	156 -	
S-1245-1-8	164 -16	1
S-1245-2-2	157 -	
	159 -10	
	163 -	
	165 -29	3
S-1245-2-3	165 -33	1
S-1245-2-4	158 -	
	159 - 6	
	159 - 7	
	164 -10	
	165 -34	4
S-1245-2-6	163 -	1
S-1245-2-7	156 -	
	157 -	
S-1245-3-3	159 - 8	
	159 -18	
	159 -19	
	160 - 6	4
S-1245-3-5	164 - 6	1
S-1245-3-6	158 -	
S-1245-3-8	157 -	
	158 -	
S-1246AL-13-24-63	31 -	6
S-1246AL13-16-32	25 -	38
S-1246AL13-24-32	25 -	16
S-1246AL13-24-63	25 -	22
S-1246B22-17-032	171 - 9	4
S-1246SS-13-20-40	78 -	
	78 -	20
S-1256C1032-8A	78 -	
	78 -	23
S-1264-2	36 -	1
S-1314	287 -44B	1
S-1452-064	268 -	4
S-1452-070	268 -	
	268 -	8
S-1452-080	2 -	8
S-1452-098	2 -16	4
S-1452-9	268 -	4
S-187048-3S-040	73A-	
	73A-	4
S-187048-3S-053	73A-	2
S-4501 X 24	121 -	2
S-4538	1 -	2
SA4335	157 -	
	157 -	
	158 -	
SA8256C	270 - 7	1
SE-15-1	153 -	
SF26869	313 -23	
SF26870	313 - 3	
	313 -24	1
SF26871	313 -15	
SF26872	313 - 6	
SF31402	313 - 7	
SF40792	312 -	
SF42043	315 - 2	
SF42044	312 -20	
SF42606	315 - 3	
SF42684	312 - 5	
SF42690	315 - 4	

PART NUMBER	FIGURE AND INDEX NUMBER	QUANTITY
SF42691	315 - 5	
SF42724	312 -17	
SK179BP10-10	140 -64	1
SK179BP10-20	140 -	2
SK179BP6-14	141 -	4
SK179BP6-16	140 -	1
SK179BP6-20	140 -	10
SK179B10-10	140 -	3
SK179B6-16	140 -	1
SK179B6-20	140 -	1
SK179B6-7	141 -	4
SK179B8-7	150 -	2
SK4262-A-79.60	128 -	
SN1204B	116 -18	1
SPEC AMS-3208	293 -31	
	293 -	2
SPEC AMS3240	175 -	
	175 -	3
SPEC AN-JC48A	149 -	2
SPEC AN-W-6	82 -61	1
SPEC ANT-1	149 -	
SPEC JAN1-631	149 -	1
SPEC MIL-I-25687	140 -	
SPEC MIL-I-5099A (1)	140 -69	1
SPEC MIL-M-5388A	140 -	
SPEC MIL-1-7721 (1)	140 -	
SPEC XH45D24627	140 -29	1
SPEC X50C4064	127 -12	1
SPEC Y-27671-A	140 -	
SPEC Y-27671-B	140 -	
SPEC 21098	146 -11	1
SPEC 21098B	146 -	
SPEC 21120-A	140 -	
SPEC 21125	146 -12	1
SPEC 21125A	146 -	
SPEC 21182A	140 -	
SPEC 21311	140 -24	1
SPEC 21323	143 - 3	
	147 -	2
SPEC 24993	311 -32	2
SPEC 27144	140 -71	1
SPEC 27332	140 -75	1
SPEC 27635	144 - 1	1
SPEC 27663	140 -	
	141 -	
SPEC 27663-A	140 -	
SPEC 27663-B	140 -	
SPEC 27671-B	140 -41	1
SPEC 32439A	176 - 7	1
SPEC 32471	289 -59	REF
SPEC 32471	176 -21	1
SPEC 32529A	140 -	
SPEC 32539	140 -50	1
SPEC 32603	185 -13	1
SPEC 32603A	185 -	
SPEC 41087	285 -17	1
SPEC 5892	289 -	1
SPEC 94-40355	287 - 7	4
SS-48143	244 -	
	247 -18	20
SS50727	296 - 5	2
ST23166	316 -10	
ST28064	315 - 6	
S0-166	288 -18	1
S1191	77 -	2
S20	11 -	8
S2222	116 -12	1
S23-3B-1A	139 -31	1

PART NUMBER	FIGURE AND INDEX NUMBER	QUANTITY
S4-200	41 -	4
S4-225	37 -	
	37 -	
	53 -	
	53 -	
	109 -	
	109 -	
	121 -	61
S5-200	43 -50	
	43 -	12
S5-225	33 -	2
S5-300	5 -	
	5 -	
	32 -	
	60 -	
	60 -	
	61 -	
	73 -	
	74 -	
	74 -	83
S5-325	60 -	
	75 -	
	75 -16	15
S6-250	65 -	
	307 -	14
S6-425	51 -	2
S84077	271 -43	1
T-J-503-25	314 -27	
T-19931	313 -18	
T-20588	312 - 2	
T-250676	314 -16	
T-49B	315 -	
TAC1376	315 -16	
TAC2001	315 -18	
TAC2060	315 -17	
TA6C1	203 -	
	203 -	
	205 -	
	205 -	
TA710-DH12	163 -	
	165 -	3
TA710-DH14	164 - 5	
	165 -	7
TA710-DH16	159 -	
	159 -	
	165 - 3	
	165 -30	14
TA710-DH20	159 -15	
	160 -10	
	162 -32	
	162 -34	
	165 -	7
TA710-DH21	162 -33	1
TA710-DH22	159 -16	
	160 - 9	
	164 - 4	
	164 -11	
	165 -	8
TA710-DH24	163 -27	1
TA710-DH28	163 -28	1
TA710-10	155 -13	
	156 -	
	157 -42	
	158 -18	
	161 -12	
	163 -29	
	168 -	
	168 - 5	

PART NUMBER	FIGURE AND INDEX NUMBER	QUANTITY
TA710-10	172 -10	
	175 -	
	186 -	21
TA710-11	164 -56	1
TA710-12	152 -38	
	157 -	
	157 -43	
	168 -	
	175 -	8
TA710-14	152 -35	
	152 -37	
	156 - 6	
	156 -13	
	157 -	
	157 -52	
	158 -	
	158 -	
	175 -	
	175 -	19
TA710-15	164 -54	4
TA710-16	155 -	
	157 -45	5
TA710-18	158 -	
	158 -	
	160 -	
	160 -	
	163 -	
	165 -	11
TA710-2	157 -44	1
TA710-20	156 -	3
TA710-22	152 -36	
	164 -	3
TA710-23	158 -	1
TA710-24	152 -41	1
TA710-28	152 -42	2
TA710-3	173 -42	
	175 -	4
TA710-4	152 -39	
	159 -	
	160 - 5	
	161 -11	
	162 -12	
	164 -30	
	165 -31	
	168 -	
	173 -41	43
TA710-5	152 -34	
	157 -	
	158 -46	
	164 -19	6
TA710-6	142 -17	
	152 -40	
	157 -	
	161 -32	
	162 -31	
	163 -11	
	165 -56	
	168 -	34
TA710-7	156 -	
	157 -	
	159 - 5	
	165 - 2	
	165 -32	
	168 -44	
	172 - 8	
	175 -	20
TA710-8	155 -28	
	156 - 7	

PART NUMBER	FIGURE AND INDEX NUMBER	QUANTITY
TA710-8	156 -	
	157 -	
	157 -49	
	157 -50	
	158 -28	
	159 -17	
	162 -	
	163 -	
	163 -30	
	164 -28	
	165 -55	
	168 -	
	175 -	
	292 -	34
TA710-9	168 - 7	1
TA716-S2HT	173 - 1	24
TA716-S3HT	173 -	79
TA716-S4HT	173 -	45
TA716-S5HT	173 -	40
TBF-18-12PS	167 - 5	1
TBF-20-29PS	163 -	1
TBF20-29PS	288 -26	1
TF23225	322 -15	
TF23304	322 - 7	
TF27488	322 -	
TF28996	322 -	
TF31400-3	165 -77	REF
	245 -46	
TF31400-3	244 -23	
	253 -55	3
TF31941	322 -16	
TF600	315 - 7	
TJ507-99-101-1S	315 -19	
TJ507-99-101-2S	315 -	
TP2319-27	2 -	
TP2320-30	2 -	
TYPE A2	140 -	1
TYPE B	136 -	4
TYPE CLX11-1	70 -46	1
TYPE J2	157 -23	1
TYPE M1A2	70 -	1
T158	312 -11	
T170	307 -	5
T191	312 -	
T19836	313 -17	
T224	315 -14	
T225	315 -15	
T228	316 - 7	
T228161	316 -11	
T229	316 - 8	
T229608	313 - 8	
T229609	313 - 9	
T231	312 - 7	
T23102	316 -13	
T232	313 -16	
T233	312 - 6	
T234485	313 -13	
T240346	316 -12	
T243458	322 - 8	
T254	316 -	
T256875	322 - 9	
T264	315 -26	
T266-800	316 - 4	
T268	312 -	
T280246	316 - 1	
T280246-101	316 - 2	
T280246-108	316 - 3	
T307	312 -	
T308	312 - 9	
T309	312 - 8	
T310	312 -10	
T480	316 -	
T49B12	315 - 9	
T49B13	315 -10	
T49B14	315 -11	
T49B15	315 -	
T49B16	315 -	
T49B17	315 -12	
T49B18	315 -	
T49B19	315 -	
T49B20	315 -	
T49B21	315 -13	
T49B8	315 - 8	
T5015/ARC-502	288 -33	1
T71	312 -	
T97829	318 -18	
T98412	312 -19	
U-15/U	288 -	1
U-61/U	286 -15	1
UG-1185/U	290 - 2	1
UG-1186/U	289 -	1
UG-21/U	290 - 3	1
UG-212A/U	296 -15	
	296 -17	2
UG-260A/U	292 -	4
UG-58/U	291 -13	1
UG21/U	291 - 2	1
UG23/U	291 - 3	1
UJ214	82 -54	1
U15/U	289 -	1
U16/U	289 -	1
VS2319-27	2 -	
VS2320-30	2 -	
WA3S-A38	297 -41	4
WA3S-BT1	114 -	
	186 - 4	8
WB008-1-1/2	271 -37	1
WE443-10DM	278 - 4	1
WE451-2D	256 - 6	1
WM346-1D	281 - 5	1
WWD-180	299 -23	2
W102DB3	140 -	1
W104NGY3GY	116 -	2
W7946-2D	272 -55	1
W98292-1-100	73 -	1
W98292-3-290	316 - 5	
W98292-6-620	308 - 2	2
X-4	286 - 5	
	286 -19	2
XS-49348-K2915	301A-	58
X218-6	148 -	4
X3499-1	162 -	
YAV14-H34F	263 -31	2
YHS100S-6	157 -26	
	158 -50	2
YR-137-CP-X	18 -21	16
Y4321A	115 -10	1
ZT1807	321 -24	
Z1200-02	78 -	
	111 -	
	148 -	
	148 -	
	148 -	16
0-3903NN-0-4057	119 -	1
025901A	307 -	1
0428AF10	110 -	

PART NUMBER	FIGURE AND INDEX NUMBER	QUANTITY
0428AF10	110 -	
	111 -	
	111 -	34
062001-8-16 3/4	207 -	
068001-8-16 3/4	207 -	
068001-8-22	207 -	
068001-8-25-1/2	104 -	
	105 -	
068001-8-26-1/2	104 -	
	105 -	
1-1045-76	253 -63	REF
1-1045-76	245 -36	
	250 -14	
	252 -35	4
1AGS605	287 -	
	287 -	
1AT5	182 -11	1
1D145-3	140 -59	1
1HA1LH	94 - 3	1
1HA1RH	82 - 4	
	94 -	
	154 -31	3
1HS-6	140 -56	1
1J1-1-1-3	182 -	
	187 -	7
1J1-1A-2-10	293 -	2
1J1-1A-2-4	292 -	
	293A-	2
1J1-1A-2-6	293A-	1
1J1-1A-2-8	293 -	
	293A-	4
1J1-1A1A3	178 -	
	178 -	2
1J1-1A1A4	173 -	
	174 -10	2
1J1-1A1A5	289 -	1
1J1-1A1A8	178 -	
	178 -	3
1J1-1A2-3	175 -	4
1J1-1A2-4	172 -	
	175 -	
	175 -	11
1J1-1A2-6	177 -	1
1J1-1A2-7	164 -	2
1J1-1A3-36	177 -	1
1J1-2-0-8	168 -	1
1J1-2-2-10	162 -	2
1J1-2-2-14	293A-	2
1J1-2-2-3	160 -	
	160 -	
	163 -14	
	164 -	6
1J1-2-2-4	142 -15	
	155 -	
	155 -	
	183 -	4
1J1-2-2-6	127 -20	
	152 -13	
	152 -	
	155 -	
	155 -	
	158 -	
	293A-	13
1J1-2-2-7	175 -	1
1J1-2-2-8	157 -	1
1J1-2-214	157 -	1
1J1-2-3-12	155 -	
	177 -	2

PART NUMBER	FIGURE AND INDEX NUMBER	QUANTITY
1J1-2-3-16	157 -	1
1J1-2-3-18	288 -	2
1J1-2-3-20	152 -	
	152 -	2
1J1-2-3-4	155 -	
	293 -	
	293A-	4
1J1-2-3-5	293 -	1
1J1-2-3-6	155 -	
	293 -	3
1J1-2-3-8	293 -	1
1J1-2-4-6	177 -	1
1K4	273 -	1
1K6	182 -	1
1L1-2	100 -	
	100 -	2
1L1-2H	100 -	
	100 -	
1L1-3H	100 -	
	100 -	
1N5-4D	82 -44	
	215 -15	2
1N7-12	242 -24	1
1N7-12A	242 -	1
1P6S	243 -33	9
1P7	131 -13	
	136 -22	
	137 - 5	8
1R11-8-049-428	38 -	2
1R12-6-.049-DG8	69 -25	1
1R4-8	30 -57	1
1R8P428	70 -	
	70 -43	2
1R8P8-428	218 -11	2
1T9-2RH	68 - 5	1
1V4-20-30	195 -25	1
1V7-18-30	201 -12	2
1V7-2-30	210 -17	
	211 - 9	2
1V7-20-30	213 - 8	1
1V7-40-30M	197 -14	1
1V7-8-30	210 -29	
	231 -12	2
10-1002	188 -	
10-1344-75	104 -26	1
10-15045	157 -	
	158 -	3
10-236-11	260 -12	2
10-242-1-1	260 -11	2
10-2750-79	245 -	
10B1-3-4-5	112 - 3	1
10B1-4-4-6	153 -	1
10B1-6-4-3	244 -	2
10B1-6-4-4	253 -	1
10B1C3-3-4	175 - 8	2
10C1-1-16	156 -	1
10C1-1-2	156 -	1
10C1-1-5	156 -10	1
10C1-2-2	157 -19	1
10C1-2-4	158 -	1
10C1-2-7	156 - 8	
	157 -18	7
10C1-3-6	158 -22	1
10C1-3-8	157 -15	
	158 -27	2
10C2A14-16-1/8	166 - 4	1
10C2A14-37	154 -	1
10C2B13-15	168 -	

PART NUMBER	FIGURE AND INDEX NUMBER	QUANTITY
10C2B13-15	169 -	4
10C2B16-11-3/4	69 -	1
10C2B16-2	173 -40	2
10C2B17-1-1/4	168 -	
	169 -	32
10C2B3-8	102 -	1
10C2B4-12	156 -	1
10C2B8-10	150 -	
	150 -	2
10C2B8-11	201 -	2
10C2B8-14-1/2	168 -16	
	169 -15	4
10C2C7-17	172 - 9	1
10C2D11-6	168 -38	2
10C2D14-24-1/2	169 -58	1
10C2D6-14	289 -	1
10C2D8-19	169 -50	1
10C2E10-3	148 -14	1
10C2E16-24	289 - 2	1
10C2E17-5	168 -40	
	169 -37	8
10C2E7-52	106 -	1
10C2E8-10	106 -	4
10C2E9-14	155 -31	1
10C2E9-3	148 -	1
10EA/58718	142 -27	1
10H-1774	290 -	
	290 -	
	291 -	
10S1	219 -11	2
101-31	95 -23	2
102	152 -26	1
102-54256	154 -15	
	154 -23	2
102-54256-3	164 -	
	164 -	
	165 -12	
	165 -	6
102-54257	154 -	1
102-54257-2	154 -	1
102-54258	154 -21	1
102-54259	154 -12	
	154 -20	2
102-54259-3	164 -	
	164 -	
	165 -16	
	165 -	4
102-54261	154 -11	
	154 -19	2
102-54265	154 -14	
	154 -22	2
102-54265-3	164 -	
	164 -	
	165 -14	
	165 -	6
102052-6	161 -41	REF
102052-6	274 - 1	1
10212-200	277 - 8	1
1028-4	157 -	
	158 -38	
	158 -	3
103-301	321 - 7	
104226	271 -	1
104260	272 -	
104451	293 - 6	
	293 -	2
105685	271 -	1
1071	168 -54	

PART NUMBER	FIGURE AND INDEX NUMBER	QUANTITY
1071	168 -55	
	169 -55	
	169 -56	
	169 -60	
	169 -61	
	171 -16	
	171 -17	12
10850-6	140 -	1
10850-8	140 -.	
	140 -	
	142 -20	4
108745	271 -	1
109-54144	168 -	
	169 -	4
109-54259	154 -13	1
109-61127	297 -18	2
109-63035	263 -21	
	305 -17	4
11-344-75	256 -13	1
11AT50	182 -	
11B1-3	26 -33	REF
11B1-3	29 -61	1
11B1-5	26 -32	REF
11B1-5	29 -59	1
11S1	153 -21	1
110-1086	297 -14	3
110-1086-1	297 -	3
110-2100	297 -40	2
110-2100-1	297 -	2
11060-1	223 - 1	1
1111-517733	104 -16	
	105 -14	2
1111-518038	250 - 8	1
1111-526657	268 -37	2
1111-527826	265 -	
1112-538469M1	120 -16	1
1116-51.7126	197 -30	1
1116-51.7126-M1	197 -	1
11363	223 - 3	4
114162	200 -31	
	209 -11	3
115-C	307 -	1
117-31825	71 -	4
117-31825-9	70 -63	4
117-31923	2 -21	2
117-33144	85 - 9	1
117-48116	252 -62	
	253 - 6	6
117-48142-11	247 -28	
	252 -56	
	252 -	5
117-48289	250 - 4	4
117-51070	121 -	1
117-52458	135 -15	2
117-54240	168 -27	
	169 -27	4
117-54241	168 -26	
	169 -26	4
117-54242	168 -	
	169 -	4
117-54243	168 -25	
	169 -25	4
117-54244	168 -28	
	169 -28	4
117-58107	233 - 4	2
117-63227	307 -12	4
117-63230	311 - 9	2
117-63295	307 -13	2

PART NUMBER	FIGURE AND INDEX NUMBER	QUANTITY
1175	298 -	6
1175-2	298 -22	6
1184	298 -23	6
1185-6C-9/16	250 -17	1
119B100-4	299 -	
12	278 -28	2
12-1241-13-20	260 -	2
12B-048	9 -	
12B-064	27 -	4
12S1	307 -16	
	307 -23	
	307 -	3
120-33548	47 -74	REF
120-33548	100 - 1	1
120-43091	115 -	
	116 -37	4
120-48079-10	12 -21	2
120-48258	268 - 5	2
120-48528	266 - 6	2
120-53344-12	271 -27	1
120-53344-13	272 -20	1
120-53344-15	272 -26	2
120-54229-800	158 -15	1
120-615562	297 -	2
120-615562-10	297 -	2
120-615562-2	297 -19	2
120-615562-3	297 -15	2
120-61620	297 -20	2
120-63039	307 -11	1
120-63210	100 -22	1
1200-1	307 -14	3
1202A	297 -	
120814	160 -17	1
12120	223 -	
12288	157 -54	1
123-53136	79 -47	REF
123-53136	80 -22	4
123-71063	288 -28	3
124-D-100-5	299 -30	1
1264-938	165 -44	1
13-1010	166 -28	REF
13-1010	231 - 1	1
13-1054	210 -	1
13-21015-7	26 -34	REF
13-21015-7	132 -16	2
13-30012-952	54 -	1
13-30013-1	301 -	NP
13-30013-2	301 -	NP
13-30013-6	301 - 6	1
13-30013-7	301 - 8	1
13-30014-2	301 -	NP
13-30014-3	301 -	NP
13-30014-4	301 - 7	1
13-30014-5	301 - 9	1
13-31011	47 -	NP
13-31011-965	47 -60	1
13-34132-10	107 -11	1
13-50059-800	121 -38	1
13-50060	38A- 8	1
13-50060-3	38A-	1
13-50060-5	38A-	2
13-50060-7	38A-	1
13-50060-9	38A-	1
13-50061	39 -48	1
13-50066	173 -45	1
13-50067	165 -	1
13-50068	165 -	1
13-50069	142 - 9	1

PART NUMBER	FIGURE AND INDEX NUMBER	QUANTITY
13-51012	147 - 2	1
13-51013	147 - 3	1
13-51015-15	151 - 3	1
13-51015-17	151 - 7	1
13-51015-19	151 - 9	1
13-51015-21	151 -11	1
13-51015-23	151 -13	1
13-51034-10	153 -48	1
13-51034-14	153 -	1
13-51049	152 -	1
13-51053	156 -23	1
13-51055	162 -	1
13-52049	288 - 5	1
13-52049-800	288 -	1
13-52101-22	290 -14	REF
13-52101-800	289 - 3	1
13-53400	1 -	NP
13-60004	102 -22	
	103 -12	2
13-62026	103 - 9	
	112 -42	2
13-62027	112 -38	1
13-62028-1	112 -	1
13-62028-11	112 -	1
13-62028-13	112 -46	1
13-62028-15	106 -17	REF
	107 -16	
13-62028-15	112 -35	1
13-62028-5	112 -	1
13-62028-9	112 -	1
13-62029	112 -44	1
13-62046-3	268 -	1
13-62046-5	268 -	1
13-63013	110 - 4	1
13-63014	110 -	6
13-63015-1	110 -21	
	111 -25	3
13-63015-3	110 - 6	
	111 -15	4
13-63016-1	110 -23	
	111 -26	2
13-63016-3	110 - 9	
	111 -16	4
13-63017-4	110 - 7	
	111 -17	4
13-63021	110 - 2	1
13-63021-3	111 -37	1
13-63021-5	111 -	1
13-63022	111 -39	1
13-63022-800	111 -	1
13-63023	111 -38	1
13-63024	111 -	1
13-63024-800	110 -	1
13-63031	110 - 5	
	111 -	
	118 -53	3
13-63032-3	307 -	1
13-63032-5	307 -	1
13-64031	253 -60	REF
13-64031	250 -20	1
13-64034	253 -	1
13-64034-3	253 -16	1
13-64035	253 -18	1
13-64036-100	255 -	1
13-64036-29	255 - 5	1
13-64036-3	255 - 1	1
13-64036-31	255 - 4	1
13-64036-7	255 - 2	1

PART NUMBER	FIGURE AND INDEX NUMBER	QUANTITY
13-64036-801	255 -	1
13-64038	255 -10	1
13-64048	251 -12	1
13-64051	251 - 9	1
13-64060-7	254 -	2
13-64060-803	254 -	1
13-64060-805	254 -13	1
13-64071-3	263 - 2	4
13-68019-6	285 -	1
13-71006	100 -	1
13-71031	189 -29	1
13-71033	226 - 9	1
13-71034	227 - 2	1
13-71035	219 -	
	220 - 8	
	221 -	
	232 -20	
	233 -	
	237 -	
	242 -28	
	243 -34	12
13-71054	83 -	
	95 -	3
13-71059	84 -13	3
13-71060	200 -	2
13-71083-800	225 -26	3
13-79023	297 -46	2
13-79024	297 -47	2
13-86018-800	71 -	1
13-86018-950	71 -18	1
13-86019	285 - 8	1
13-86022	1 -	REF
13-86022	307 -	NP
13-86030	121 -	1
13-86032	118 -24	1
13-86032-3	118 -	1
13-90015	80 -	2
13-91015	125 -49	REF
13-91015	126 -24	1
13-91017-1	129 -11	2
13-91017-2	129 -12	2
13-91017-3	129 -	4
13-92015	131 - 8	1
13-92015-800	131 -10	1
13-92016-1	73A- 2	1
13-92016-2	73A-	1
13-92017-1	73A-16	1
13-92017-2	73A-	1
13-92018-1	73A- 4	
	73A-18	2
13-92018-2	73A-	
	73A-	2
13-92019-1	73A- 5	
	73A-19	2
13-92019-2	73A-	
	73A-	2
13-92027-1	73A- 1	1
13-92027-2	73A-	1
13-92028-1	73 -	REF
13-92028-1	73A-	NP
13-92028-2	73 -	REF
13-92028-2	73A-	NP
13-92028-3	73A-	
	73A-	2
13-92028-4	73A-	
	73A-	2
13-92028-5	73A-	1
13-92028-6	73A-	1

PART NUMBER	FIGURE AND INDEX NUMBER	QUANTITY
13-92030-3	73A-	
	73A-	4
13-92030-5	73A-	2
13-92040	243 -	2
13-93012-1	73A- 9	1
13-93012-2	73A-	1
13-93013-1	73A-11	1
13-93013-12	73A-	1
13-93014-1	73A-12	1
13-93014-2	73A-	1
13-96007-20	1 -	REF
	304 -	
13-96007-20	303 -	NP
13-96007-5	303 -17	1
13-96010	304 - 1	REF
13-96010	305 -	NP
13-96011-3	305 -	1
13-96011-5	305 -	1
13-96012	305 -	1
13-96012-1	305 -	1
13-96012-3	305 -	
	305 -30	2
13-96013	305 -	1
13-96013-3	305 -29	1
13-96014	305 - 6	2
13-96041	305 -22	2
13-96042	305 -33	2
13-96043	305 - 1	1
13-96044	305 - 2	1
13-96045	305 - 4	1
13-96046	305 -	1
13-96047	305 -	2
13-96047-951	305 -41	2
13-96047-953	305 -40	2
13-96048	305 -21	2
13-96049	305 -38	1
13-96050-3	305 -37	2
13-96051	305 - 5	1
13-96052	305 -	1
13-96053	305 -24	1
13-96054	303 - 1	1
13-96055-103	303 -14	1
13-96055-109	304 - 3	1
13-96055-111	304 - 7	1
13-96055-13	303 -27	1
13-96055-15	303 -32	1
13-96055-17	303 -	1
13-96055-5	303 -25	1
13-96056-3	303 -11	1
13-96056-5	303 - 8	1
13-96057	303 - 2	1
13-96058-10	303 -	1
13-96058-20	303 -	1
13-96058-5	303 -	1
13-96058-7	303 - 3	1
13-96059-10	303 -35	REF
13-96059-10	304 - 2	1
13-96060-5	303 -13	1
13-96065	304 -10	1
13-96067	303 -	1
13-96068	303 -	1
13-96071	303 - 7	1
13-96072	303 -15	1
13A-00001	1 -	1
13A-00001-20	1 -	AR
13A-00001-802	1 - 7	REF
13A-00001-802	72 - 1	
13A-00001-804	1 -	1

PART NUMBER	FIGURE AND INDEX NUMBER	QUANTITY
13A-00001-806	1 -	1
13A-00001-808	1 -	1
13A-00001-810	1 -	1
13A-00001-812	1 -	1
13A-00001-814	72 -	
13A-00001-816	72 -	
13A-00001-818	72 -	
13A-00001-820	72 -	
13A-00001-822	72 -	
13A-10010-1	17 -	NP
13A-10010-2	17 -	NP
13A-10010-4	17 -	2
13A-10010-6	17 -	2
13A-10010-8	17 -	
	17 -	4
13A-20031	26 -	2
13A-30001	1 - 3	REF
13A-30001	32 -	NP
13A-30001-20	32 -	NP
13A-30001-801	32 -	NP
13A-30001-802	32 -	NP
13A-30001-803	32 -	NP
13A-30001-804	32 -	NP
13A-30001-805	32 -	NP
13A-30001-806	32 -	NP
13A-30002	67 -	REF
13A-30002	36 -	1
13A-30002-20	36 -	1
13A-30002-3	36 -15	1
13A-30002-30	36 -	1
13A-30002-4	36 -	1
13A-30002-40	36 -	1
13A-30002-50	36 -	1
13A-30002-6	36 -	AR
13A-30002-60	36 -	1
13A-30002-7	36 -	AR
13A-30004	36 -	NP
13A-30010	1 -	REF
	32 - 1	
13A-30010	36 -	1
13A-30010-20	36 -	1
13A-30010-30	36 -	1
13A-30010-40	36 -	1
13A-30010-50	36 -	1
13A-30010-60	36 -	1
13A-30011	32 - 2	REF
13A-30011	73 -	1
13A-30011-801	73 -	1
13A-30011-803	73 -	1
13A-30011-805	73 -	1
13A-30011-807	73 -	1
13A-30012	56 -	1
13A-30013	56 -	1
13A-31018	45 - 3	REF
13A-31018	47 -	1
13A-31018-19	47 -51	1
13A-31018-27	47 -58	1
13A-31018-39	47 - 1	1
13A-31018-43	47 -	2
13A-31018-51	47 -37	1
13A-31018-52	47 -38	1
13A-31018-53	47 -10	1
13A-31018-57	47 -	1
13A-31018-58	47 -18	1
13A-31018-59	47 -	2
13A-31280-3	56 -55	1
13A-31280-5	56 -	1
13A-32001	36 - 2	REF

PART NUMBER	FIGURE AND INDEX NUMBER	QUANTITY
13A-32001	56 -	1
13A-32001-100	56 -	1
13A-32001-11	56 -	2
13A-32001-20	56 -	1
13A-32001-3	56 -57	1
13A-32001-4	56 -	1
13A-32001-800	56 -	1
13A-32001-86	56 -	1
13A-32001-91	56 -	AR
13A-32002	56 - 4	REF
13A-32002	60 -	1
13A-32002-149	60 -	1
13A-32002-151	60 -	1
13A-32002-3	60 -50	1
13A-32002-49	60 -49	1
13A-32002-51	60 -	1
13A-32002-69	60 -	1
13A-32002-800	60 -	1
13A-32003	56 - 1	REF
13A-32003	62 -	1
13A-32003-10	62 -	1
13A-32003-100	62 -	1
13A-32003-17	62 -	1
13A-32003-19	62 -70	1
13A-32003-200	62 -	1
13A-32003-21	62 -68	1
13A-32003-23	62 -	1
13A-32003-25	62 -	1
13A-32003-27	62 -	1
13A-32003-29	62 -	1
13A-32003-33	62 -75	1
13A-32003-35	62 -	1
13A-32003-45	62 -74	1
13A-32003-47	62 -53	1
13A-32003-49	62 -	1
13A-32003-51	62 -72	1
13A-32003-53	62 -	1
13A-32003-55	62 -73	1
13A-32003-57	62 -	1
13A-32003-59	62 -	1
13A-32003-61	62 -67	1
13A-32003-63	62 -	1
13A-32003-65	62 -	1
13A-32003-67	62 -69	1
13A-32003-69	62 -	1
13A-32003-71	62 -66	1
13A-32003-73	62 -65	1
13A-32003-75	62 -	1
13A-32003-81	62 -	1
13A-32003-87	62 -71	1
13A-32004	56 -	REF
13A-32004	63 -	1
13A-32004-100	63 -	1
13A-32004-117	63 -	1
13A-32004-121	63 -	1
13A-32004-17	63 -	1
13A-32004-19	63 -	1
13A-32004-21	63 -	1
13A-32004-23	63 -51	1
13A-32004-25	63 -	1
13A-32004-27	63 -	1
13A-32004-29	63 -	1
13A-32004-3	63 -43	1
13A-32004-47	63 -	1
13A-32004-51	63 -	1
13A-32004-53	63 -53	1
13A-32004-57	63 -56	1
13A-32004-59	63 -	1

PART NUMBER	FIGURE AND INDEX NUMBER	QUANTITY
13A-32004-61	63 -55	1
13A-32004-63	63 -	1
13A-32004-65	63 -57	1
13A-32004-67	63 -	1
13A-32004-69	63 -58	1
13A-32004-71	63 -	1
13A-32004-73	63 -	1
13A-32004-75	63 -50	1
13A-32004-77	63 -	1
13A-32004-79	63 -	1
13A-32004-800	63 -	1
13A-32004-81	63 -52	1
13A-32004-83	63 -	1
13A-32004-85	63 -49	2
13A-32004-87	63 -54	1
13A-32004-89	63 -	1
13A-32004-951	63 -	1
13A-32005	56 - 2	REF
13A-32005	65 -	1
13A-32005-100	65 -	1
13A-32005-101	65 -	1
13A-32005-11	65 -	1
13A-32005-13	65 -31	2
13A-32005-15	65 -	2
13A-32005-17	65 -	1
13A-32005-18	65 -	1
13A-32005-21	65 -	1
13A-32005-23	65 -	1
13A-32005-25	65 -32	2
13A-32005-29	65 -33	1
13A-32005-30	65 -	1
13A-32005-31	65 -34	1
13A-32005-32	65 -	1
13A-32005-861	65 -	2
13A-32005-9	65 -30	1
13A-32006	56 - 5	REF
13A-32006	61 -	1
13A-32006-3	61 -	1
13A-32006-31	61 -	1
13A-32006-33	61 -	1
13A-32006-34	61 -	1
13A-32006-35	61 -	1
13A-32006-36	61 - 8	1
13A-32006-4	61 - 7	1
13A-32006-7	61 - 4	1
13A-32007	56 - 6	REF
13A-32007	61 -	1
13A-32007-11	61 -19	1
13A-32007-13	61 -22	1
13A-32007-15	61 -23	1
13A-32007-17	61 -26	1
13A-32007-19	61 -	1
13A-32007-21	102 -25	REF
	103 -15	
13A-32007-21	61 -21	1
13A-32007-3	61 -	1
13A-32007-35	61 -20	1
13A-32007-37	61 -	2
13A-32007-39	61 -	1
13A-32007-45	61 -	1
13A-32007-47	61 -	1
13A-32007-49	61 -	1
13A-32007-5	61 -17	1
13A-32007-51	61 -24	1
13A-32007-60	61 -	1
13A-32007-7	61 -16	1
13A-32007-9	61 -18	1
13A-32008	56 - 3	REF

PART NUMBER	FIGURE AND INDEX NUMBER	QUANTITY
13A-32008	58 -	1
13A-32008-11	58 -27	1
13A-32008-17	58 -	1
13A-32008-19	58 -28	1
13A-32008-3	58 -	1
13A-32008-5	58 -29	2
13A-32015	56 -13	1
13A-32016	57 -	1
13A-32017	57 -	1
13A-32018-3	57 -	1
13A-32018-5	57 -	1
13A-32019-3	57 -	1
13A-32019-5	57 -	1
13A-32021	60 -	1
13A-32021-15	60 - 8	1
13A-32021-16	60 -	1
13A-32021-3	60 - 6	1
13A-32022	60 -	1
13A-32022-13	60 -23	1
13A-32022-14	60 -	1
13A-32022-3	60 -	1
13A-32022-5	60 -20	1
13A-32022-7	60 -	1
13A-32022-9	60 -	1
13A-32023	60 -	1
13A-32023-3	60 -33	1
13A-32024	60 -	1
13A-32024-800	60 -	1
13A-32026	106 -18	REF
13A-32026	56 -	1
13A-32026-801	107 -17	REF
13A-32026-801	56 -	1
13A-32027-3	56 -31	1
13A-32027-5	56 -32	1
13A-32027-9	56 -	1
13A-32028	60 -51	REF
13A-32028	56 -39	2
13A-32029	56 -35	1
13A-32030	56 -36	1
13A-32031	56 -34	1
13A-32032	56 -33	4
13A-32033	60 -41	1
13A-32035	37 -58	REF
	303 -36	
13A-32035	60 -	1
13A-32035-11	60 - 3	1
13A-32035-3	60 - 1	1
13A-32035-9	60 - 2	1
13A-32036	56 -	1
13A-32040	62 -38	1
13A-32040-100	62 -	1
13A-32041	63 -	1
13A-32042	62 -48	1
13A-32043	63 -	1
13A-32044	56 -	1
13A-32044-3	56 -29	1
13A-32044-45	56 -	1
13A-32044-5	56 -25	1
13A-32044-51	56 -	1
13A-32044-7	56 -	1
13A-32044-75	56 -	1
13A-32044-77	56 -26	1
13A-32044-801	56 -	1
13A-32044-803	56 -	1
13A-32044-805	56 -	1
13A-32045-3	62 -	1
13A-32045-5	63 -	1
13A-32046	36 -43	1

PART NUMBER	FIGURE AND INDEX NUMBER	QUANTITY
13A-32048	32 -20	1
13A-32050	65 - 2	REF
13A-32050	66 -	1
13A-32050-100	66 -	1
13A-32050-25	66 -	1
13A-32050-27	66 - 2	1
13A-32050-28	66 -	1
13A-32050-29	66 - 3	1
13A-32050-3	66 - 1	1
13A-32050-30	66 -	1
13A-32050-31	66 - 4	1
13A-32050-32	66 -	1
13A-32050-33	66 -	1
13A-32050-37	66 -	1
13A-32050-38	66 -	1
13A-32050-39	66 -12	1
13A-32050-40	66 -	1
13A-32050-45	66 - 9	1
13A-32050-46	66 -	1
13A-32050-5	66 - 5	1
13A-32050-7	66 - 7	1
13A-32050-8	66 -	1
13A-32051	61 - 3	1
13A-32052-1	65 -	1
13A-32052-101	65 -	1
13A-32052-102	65 -	1
13A-32052-15	65 -	1
13A-32052-2	65 -	1
13A-32052-3	65 -19	1
13A-32052-4	65 -	1
13A-32052-45	65 -22	1
13A-32052-59	65 -20	1
13A-32052-60	65 -	1
13A-32052-71	65 -	1
13A-32052-72	65 -	1
13A-32052-73	65 -	1
13A-32052-74	65 -	1
13A-32052-75	65 -	1
13A-32052-76	65 -	1
13A-32052-80	65 -	1
13A-32053	65 -	1
13A-32053-11	65 - 7	1
13A-32053-13	65 -	1
13A-32053-15	65 - 8	1
13A-32053-16	65 -	1
13A-32053-29	65 -	1
13A-32053-3	65 - 3	1
13A-32053-33	65 - 9	1
13A-32053-45	65 - 6	1
13A-32053-5	65 -10	1
13A-32053-7	65 - 4	1
13A-32053-9	65 - 5	1
13A-32057	63 -	1
13A-32059-1	65 -	1
13A-32059-3	65 -25	1
13A-32059-5	65 -	1
13A-32060-1	60 -52	REF
13A-32060-1	62 - 1	1
13A-32060-2	63 - 2	1
13A-32060-801	62 -	1
13A-32060-802	63 -	1
13A-32061-1	62 - 5	1
13A-32061-2	63 - 4	1
13A-32063	62 -21	1
13A-32063-10	62 -	1
13A-32064	63 -	1
13A-32065	62 -27	1
13A-32066	63 -22	1

PART NUMBER	FIGURE AND INDEX NUMBER	QUANTITY
13A-32066-100	63 -	1
13A-32067	63 -	1
13A-32068	60 -	1
13A-32068-3	60 -39	1
13A-32069	60 -	1
13A-32069-3	60 -38	1
13A-32071-11	109 -10	1
13A-32071-13	109 -13	1
13A-32071-15	109 -12	1
13A-32071-17	109 - 9	1
13A-32071-19	109 - 4	1
13A-32071-21	109 - 1	1
13A-32071-3	102 - 5	REF
13A-32071-3	109 -	1
13A-32071-43	109 - 6	
	109 -14	2
13A-32071-45	109 - 7	1
13A-32071-47	109 - 3	1
13A-32071-5	102 -	REF
13A-32071-5	109 -	1
13A-32071-53	109 -	1
13A-32071-55	109 -	1
13A-32071-57	109 -	1
13A-32071-59	109 -	1
13A-32071-61	109 -	1
13A-32071-63	109 -	1
13A-32071-67	109 -	1
13A-32071-68	109 -11	1
13A-32071-69	109 -	1
13A-32071-7	109 - 5	1
13A-32071-70	109 -	1
13A-32071-71	109 -15	1
13A-32071-72	109 - 8	1
13A-32071-73	109 -	1
13A-32071-74	109 -	1
13A-32071-803	103 - 4	REF
13A-32071-803	109 -	1
13A-32071-805	103 -	REF
13A-32071-805	109 -	1
13A-32071-9	109 - 2	1
13A-32079	63 -29	1
13A-32079-2	63 -	1
13A-32080-1	62 -39	1
13A-32080-2	63 -28	1
13A-32081	63 -	1
13A-32082	62 -52	1
13A-32083-1	62 -45	1
13A-32083-3	63 -31	1
13A-32084	62 -79	1
13A-32085-1	60 -17	1
13A-32085-2	60 -	1
13A-32086	57 - 2	2
13A-32088-1	62 -49	2
13A-32088-2	63 -	2
13A-32089-1	62 -43	1
13A-32089-2	63 -26	1
13A-32090	57 - 5	2
13A-32092	32 -25	1
13A-32093	32 -24	1
13A-32094	60 -35	1
13A-32095-1	60 -18	1
13A-32095-2	60 -	1
13A-32096-1	60 -21	
	60 -36	2
13A-32096-2	60 -	
	60 -	2
13A-32097-1	60 -22	
	60 -	2

PART NUMBER	FIGURE AND INDEX NUMBER	QUANTITY
13A-32097-2	60 -	
	60 -	2
13A-32098	60 -	1
13A-32098-3	60 -40	1
13A-32102-1	60 -	1
13A-32102-2	60 -	1
13A-32102-3	60 -27	1
13A-32102-4	60 -	1
13A-32102-5	60 -28	1
13A-32102-6	60 -	1
13A-32102-7	60 -29	2
13A-32109-1	62 -	1
13A-32109-2	63 -	1
13A-32109-3	62 - 2	1
13A-32109-4	63 -	1
13A-32112-1	62 - 6	1
13A-32112-2	63 -	1
13A-32112-4	63 - 5	1
13A-32113-1	62 -59	1
13A-32113-2	63 -	1
13A-32114	62 -56	1
13A-32115-1	62 -44	1
13A-32115-2	63 -30	1
13A-32116-1	62 -58	1
13A-32116-2	63 -34	1
13A-32117-1	62 -51	1
13A-32117-2	63 -	1
13A-32118	62 -42	1
13A-32118-801	62 -	1
13A-32119-1	62 -50	1
13A-32119-2	63 -33	1
13A-32120-1	62 -41	1
13A-32120-2	63 -36	1
13A-32121	56 -45	2
13A-32129-2	63 -32	1
13A-32130-1	65 -	1
13A-32130-2	65 -	1
13A-32131-1	65 -12	1
13A-32131-2	65 -	1
13A-32132-1	65 -	1
13A-32132-2	65 -	1
13A-32133-1	65 -16	1
13A-32133-2	65 -	1
13A-32135-1	65 -	1
13A-32135-2	65 -	1
13A-32136	56 - 7	REF
13A-32136	57 -	1
13A-32139-3	57 - 7	1
13A-32139-5	57 - 6	1
13A-32142-3	102 -26	REF
13A-32142-3	57 - 8	1
13A-32144	57 -11	2
13A-32145	57 -	2
13A-32146-1	57 -10	1
13A-32146-3	57 -	1
13A-32147	56 -	REF
13A-32147	57 -	1
13A-32148	57 - 3	2
13A-32149	57 - 4	2
13A-32150-3	57 -	1
13A-32150-5	57 -	1
13A-32153-3	103 -16	REF
13A-32153-3	57 -	1
13A-32154	63 -	1
13A-32155	63 -42	1
13A-32159-1	60 - 7	1
13A-32159-2	60 -	1
13A-32162-1	62 -28	1
13A-32162-2	63 -23	1
13A-32163-1	62 -33	1
13A-32163-2	63 -25	1
13A-32167-1	32 -28	1
13A-32167-2	32 -29	1
13A-32169-1	62 -29	1
13A-32169-2	63 -24	1
13A-32171-3	65 -26	1
13A-32172	65 -	1
13A-32178	63 -	1
13A-32179	63 - 3	1
13A-32180	56 -	1
13A-32181	56 -	1
13A-32189	56 -54	NP
13A-32189-3	56 -	1
13A-32189-5	56 -	1
13A-32189-7	56 -	1
13A-32189-9	56 -	1
13A-32190	56 -	1
13A-32192	56 -	1
13A-32193-7	56 -	1
13A-32194-3	56 -46	
	56 -	10
13A-32194-5	56 -	
	56 -47	14
13A-32194-7	56 -	2
13A-32197-1	65 -11	1
13A-32197-2	65 -	1
13A-32204	253 -49	1
13A-34001	77 -	REF
13A-34001	73 -	1
13A-34001-47	77 -57	1
13A-34001-48	77 -	1
13A-34001-57	73 -	1
13A-34001-58	73 -	1
13A-34001-59	73 -	
	73 -	2
13A-34001-801	73 -	1
13A-34001-803	73 -	1
13A-34001-805	73 -	1
13A-34001-807	73 -	1
13A-34001-809	73 -	1
13A-34001-811	73 -	1
13A-34002	73 -	REF
13A-34002	76 -	1
13A-34002-17	76 - 3	4
13A-34002-21	76 -	1
13A-34002-22	76 -15	2
13A-34002-27	76 -18	1
13A-34002-29	76 -21	1
13A-34002-3	76 -17	1
13A-34002-30	76 -	1
13A-34002-31	76 -22	2
13A-34002-5	76 -19	1
13A-34002-7	76 - 2	1
13A-34002-8	76 -	1
13A-34003	73 -	1
13A-34003-3	73 -14	1
13A-34003-51	73 -	1
13A-34003-61	73 -	1
13A-34003-801	73 -	1
13A-34003-803	73 -	1
13A-34003-805	73 -	1
13A-34003-807	73 -	1
13A-34003-809	73 -	1
13A-34004	77 -	1
13A-34004-105	77 -11	1
13A-34004-106	77 -	1

PART NUMBER	FIGURE AND INDEX NUMBER	QUANTITY
13A-34004-11	77 -31	1
13A-34004-12	77 -	1
13A-34004-127	77 -46	1
13A-34004-129	77 -47	1
13A-34004-133	77 -42	1
13A-34004-134	77 -	1
13A-34004-168	77 -	1
13A-34004-29	77 - 9	1
13A-34004-3	77 -29	1
13A-34004-30	77 -	1
13A-34004-4	77 -	1
13A-34004-5	77 -30	1
13A-34004-801	77 -	1
13A-34004-803	77 -	1
13A-34004-805	77 -	1
13A-34004-807	77 -	1
13A-34004-87	77 -23	1
13A-34004-88	77 -	1
13A-34004-9	77 -32	1
13A-34004-90	77 -	1
13A-34004-91	77 -25	1
13A-34004-92	77 -	1
13A-34004-93	77 -26	1
13A-34004-94	77 -	1
13A-34004-95	77 -27	1
13A-34004-96	77 -	1
13A-34005-1	73 -	REF
13A-34005-1	74 -	1
13A-34005-10	74 -	1
13A-34005-101	74 -27	1
13A-34005-107	74 -	1
13A-34005-108	74 -	1
13A-34005-109	74 -	1
13A-34005-110	74 -	1
13A-34005-111	74 -	1
13A-34005-112	74 -	1
13A-34005-113	74 -23	2
13A-34005-114	74 -	2
13A-34005-13	74 -20	1
13A-34005-14	74 -	1
13A-34005-15	74 -40	1
13A-34005-16	74 -	1
13A-34005-17	74 -22	
	74 -	3
13A-34005-18	74 -	
	74 -	3
13A-34005-19	74 -13	1
13A-34005-2	73 -	REF
13A-34005-2	74 -	1
13A-34005-20	74 -	1
13A-34005-21	74 -25	1
13A-34005-22	74 -	
	74 -	2
13A-34005-23	74 -36	2
13A-34005-24	74 -	2
13A-34005-25	74 -37	2
13A-34005-26	74 -	2
13A-34005-28	74 -10	1
13A-34005-29	74 -11	1
13A-34005-3	74 -54	1
13A-34005-30	74 -	1
13A-34005-31	74 -14	1
13A-34005-32	74 -	1
13A-34005-33	74 -12	1
13A-34005-34	74 -	1
13A-34005-35	74 -17	1
13A-34005-36	74 -	1
13A-34005-37	74 -	1

PART NUMBER	FIGURE AND INDEX NUMBER	QUANTITY
13A-34005-4	74 -	1
13A-34005-5	74 -55	1
13A-34005-6	74 -	1
13A-34005-7	74 -51	1
13A-34005-801	74 -	1
13A-34005-802	74 -	1
13A-34005-803	74 -	1
13A-34005-804	74 -	1
13A-34005-805	74 -	1
13A-34005-806	74 -	1
13A-34005-808	74 -	1
13A-34005-9	74 -45	1
13A-34005-99	74 -26	1
13A-34006	77 -	1
13A-34006-3	77 -20	1
13A-34006-4	77 -	1
13A-34006-71	77 -21	1
13A-34007	73 - 2	REF
13A-34007	75 -	1
13A-34007-17	75 - 3	1
13A-34007-18	75 -	1
13A-34007-19	75 - 4	1
13A-34007-20	75 -	1
13A-34007-21	75 - 5	1
13A-34007-3	75 -18	1
13A-34007-31	75 -14	1
13A-34007-32	75 -	1
13A-34007-33	75 -11	1
13A-34007-34	75 -	1
13A-34007-37	75 -12	1
13A-34007-4	75 -19	1
13A-34007-5	75 -17	1
13A-34007-7	75 -	1
13A-34007-800	75 -	1
13A-34007-89	77 -24	1
13A-34015	76 - 1	1
13A-34020-31	74 - 1	1
13A-34020-32	74 -	1
13A-34020-33	73 -15	1
13A-34020-35	75 - 1	1
13A-34020-7	74 -	1
13A-34020-8	74 -	1
13A-34020-801	74 -	1
13A-34020-802	74 -	1
13A-34021-3	74 - 2	1
13A-34021-4	74 -	1
13A-34021-5	75 - 2	1
13A-34021-803	74 -	1
13A-34021-804	74 -	1
13A-34021-805	74 -	1
13A-34021-807	74 -	1
13A-34022-1	74 -21	1
13A-34022-2	74 -	1
13A-34022-801	74 -	1
13A-34022-802	74 -	1
13A-34025	75 - 9	1
13A-34027-1	74 -16	1
13A-34027-2	74 -	1
13A-34027-801	74 -	1
13A-34027-802	74 -	1
13A-34030-1	74 -48	1
13A-34030-2	74 -	1
13A-34030-23	74 -	1
13A-34030-24	74 -	1
13A-34032-23	73 -10	1
13A-34032-31	74 -44	1
13A-34032-32	74 -	1
13A-34033	75 -13	1

PART NUMBER	FIGURE AND INDEX NUMBER	QUANTITY
13A-34034	77 -	1
13A-34034-3	77 -12	1
13A-34034-4	77 -	1
13A-34035	32 -42	REF
13A-34035-11	78 -13	1
13A-34035-15	78 -11	1
13A-34035-17	78 -10	1
13A-34035-19	78 - 8	1
13A-34035-20	78 -	1
13A-34035-21	78 - 9	1
13A-34035-22	78 -	1
13A-34035-23	78 - 6	2
13A-34035-25	78 - 7	2
13A-34035-27	78 - 4	1
13A-34035-28	78 -	1
13A-34035-3	78 -16	1
13A-34035-37	78 - 5	1
13A-34035-38	78 -	1
13A-34035-41	78 - 3	1
13A-34035-5	78 -17	1
13A-34035-53	31 -45	REF
13A-34035-53	78 -14	2
13A-34035-57	78 - 1	1
13A-34035-6	78 -	1
13A-34035-61	78 - 2	1
13A-34035-807	78 -	1
13A-34035-811	77 - 1	REF
13A-34035-811	78 -	1
13A-34035-959	78 -	1
13A-34036	77 -	1
13A-34036-29	77 -	1
13A-34036-3	77 -14	1
13A-34036-4	77 -	1
13A-34036-5	77 -	1
13A-34036-7	77 -15	1
13A-34037-1	74 -24	1
13A-34037-2	74 -	1
13A-34038-1	74 -32	1
13A-34038-2	74 -	1
13A-34038-23	73 -	1
13A-34038-24	73 -	1
13A-34038-5	73 - 9	1
13A-34039-1	75 -20	1
13A-34039-2	75 -	1
13A-34040	73 -	1
13A-34040-3	73 -21	1
13A-34040-950	77 -	1
13A-34105-1	76 -20	1
13A-34105-2	76 -	1
13A-34113	76 - 6	1
13A-34117	32 -34	2
13A-34118-1	77 -10	1
13A-34118-2	77 -	1
13A-34122	77 -	1
13A-34122-3	77 - 4	1
13A-34122-4	77 -	1
13A-34122-7	77 -	1
13A-34122-9	77 - 5	1
13A-34131	73 -16	1
13A-34133	32 -35	1
13A-34133-800	32 -	1
13A-34134	73 -12	1
13A-34135	75 -15	1
13A-34136	75 -28	REF
13A-34136	32 -36	1
13A-34141-3	73 - 1	1
13A-34141-5	73 -	1
13A-39101-3	57 -	1
13A-39101-5	57 -	1
13A-39102-3	57 - 1	1
13A-39102-5	57 -	1
13A-39105	57 -	
13A-39107	57 -	
13A-39108	32 -23	1
13A-39109	32 -22	1
13A-41010	95 -	1
13A-41010-3	95 -	1
13A-41011	95 -	
13A-41017	65A-	1
13A-49001	1 -	NP
13A-49001-800	1 -	NP
13A-50001-100	158 -	2
13A-50001-800	158 -54	1
13A-50001-801	158 -	1
13A-50001-802	158 -	
13A-50003	102 -13	1
13A-50004	61 -27	1
13A-50007	62 -54	1
13A-50008	164 -58	REF
13A-50008	62 -46	1
13A-50009	165 -46	1
13A-50010	165 -45	1
13A-50011	60 -48	1
13A-50011-800	60 -	1
13A-50013	164 -32	1
13A-50014	62 -	1
13A-50015	288 -	1
13A-50018	15 - 8	
	15 -18	
	19 -	6
13A-50019	164 - 7	1
13A-50020	302 -22	1
13A-50021	74 -	1
13A-50021-4	74 -	1
13A-50023	175 -	1
13A-50025	288 -	1
13A-50034	152 - 8	
	176 -	2
13A-51001	1 -	REF
13A-51001	148 -	NP
13A-51002	1 -	NP
13A-51003	140 -	1
13A-51003-100	140 - 9	1
13A-51003-102	140 - 8	1
13A-51003-103	140 -	1
13A-51003-111	140 - 4	1
13A-51003-113	140 - 5	1
13A-51003-203	140 -	1
13A-51003-213	140 -	1
13A-51003-215	140 -	1
13A-51003-3	140 - 1	1
13A-51003-313	140 -	1
13A-51003-413	140 -	1
13A-51003-800	140 -	1
13A-51003-801	140 -	1
13A-51003-802	140 -	1
13A-51003-804	140 -	1
13A-51003-806	140 -	1
13A-51003-808	140 -	1
13A-51003-812	140 -	
13A-51004	141 - 2	1
13A-51004-11	141 -	2
13A-51004-13	141 -	1
13A-51004-15	141 - 3	1
13A-51004-3	141 - 6	1
13A-51004-5	141 -	1

PART NUMBER	FIGURE AND INDEX NUMBER	QUANTITY
13A-51004-7	141 -	1
13A-51004-800	141 -	2
13A-51004-9	141 -	2
13A-51005	141 - 1	REF
13A-51005	140 -	1
13A-51005-100	140 -36	
	140 -38	2
13A-51005-800	140 -	1
13A-51005-801	140 -	1
13A-51005-802	140 -	1
13A-51005-804	140 -	1
13A-51005-806	140 -	1
13A-51005-808	140 -	1
13A-51008	140 -22	1
13A-51010	146 -15	REF
13A-51010	147 -	1
13A-51010-800	147 -	1
13A-51011	148 -	1
13A-51011-800	148 -	1
13A-51012-5	148 -	2
13A-51013	148 -	NP
13A-51014-3	151 -15	1
13A-51014-5	151 -17	1
13A-51015	147 -	1
13A-51015-3	147 - 7	1
13A-51016	140 -	1
13A-51016-10	140 -	1
13A-51016-2	140 -11	1
13A-51016-20	140 -	1
13A-51017	147 -	1
13A-51020	151 -20	1
13A-51022	56 -	1
13A-51023	140 -21	1
13A-51024	140 -72	1
13A-51024-10	140 -	1
13A-51024-2	140 -	1
13A-51024-20	140 -	1
13A-51024-4	140 -	1
13A-51026	151 - 1	1
13A-51028	140 -63	1
13A-51031	36 -	REF
	146 -	
	147 -	
	150 -	
	151 -	
	285 -	
13A-51031	141 -	NP
13A-51032	140 -77	1
13A-51034	164 -53	1
13A-51035-1	6 -	REF
13A-51035-1	168 -	NP
13A-51035-2	6 -	REF
13A-51035-2	168 -	NP
13A-51036	168 -35	
	169 -34	8
13A-51039	140 - 2	1
13A-51040	140 -	1
13A-51058	148 -15	1
13A-51059	148 -	1
13A-51060	165 -	1
13A-51061	140 -14	1
13A-51063	182 -	
	182 -	2
13A-51063-3	182 -	
	182 -	2
13A-51064	140 -	1
13A-53000	1 -	NP
13A-53000	307 -50	1

PART NUMBER	FIGURE AND INDEX NUMBER	QUANTITY
13A-53001	1 -	NP
13A-53015	165 -48	1
13A-53016	165 -62	1
13A-53017	161 -	1
13A-53017-10	161 -	1
13A-53017-11	161 -	1
13A-53017-3	161 -15	1
13A-53017-5	161 -14	1
13A-53017-7	161 -	1
13A-53017-9	161 -	1
13A-53018	161 -	1
13A-53018-10	161 -25	1
13A-53019	161 -21	1
13A-53020	161 -18	1
13A-53021	161 -	2
13A-53022	161 -20	1
13A-60001	1 - 6	REF
13A-60001	106 -	NP
13A-60001-800	106 -	NP
13A-60003	106 -	NP
13A-60003-3	106 -10	1
13A-60003-7	75 -26	REF
13A-60003-7	106 - 5	1
13A-60003-9	106 -	
	107 - 6	2
13A-60006	102 -23	
	103 -13	2
13A-60007	73 -20	1
13A-60008	56 -59	REF
13A-60008	106 - 3	
	107 - 3	2
13A-60008-3	107 - 4	1
13A-60009-3	106 -19	REF
13A-60009-3	77 -52	1
13A-60020	106 - 7	1
13A-60023-50	106 - 4	1
13A-60024-3	106 -20	REF
	107 -18	
13A-60024-3	75 -24	1
13A-60027	74 -33	1
13A-60027-801	74 -	1
13A-60029	102 -	1
13A-60029-3	102 -	1
13A-60030	102 -	1
13A-60030-3	102 - 7	1
13A-60031	106 -	
13A-60805	319 -	
13A-60805-12	319 -62	
13A-60805-14	319 -60	
13A-60805-18	319 -	
13A-60810	320 -25	
13A-60811	320 -28	
13A-60820	320 -13	
13A-60822	320 -18	
13A-60825	319 - 8	
	319 -17	
13A-60826	319 -	
13A-60827	319 - 7	
	319 -14	
13A-60829	320 -26	
13A-60830	319 -35	
	319 -57	
	319 -63	
13A-60831-2	319 -18	
13A-60831-3	319 -	
13A-60832-2	319 -15	
13A-60832-3	319 -	
13A-60833-1	319 - 2	

PART NUMBER	FIGURE AND INDEX NUMBER	QUANTITY
13A-60847	319 -27	
13A-60862	319 -50	
13A-60863	319 -53	
13A-60864	319 -55	
13A-60865	319 -54	
13A-60866	319 -43	
13A-60867	319 -	
13A-60867-4	319 -	
13A-60868	319 -	
13A-60870	319 -	
13A-60895	319 -	
13A-60895-3	319 - 9	
13A-60895-33	319 -12	
13A-60895-35	319 -13	
13A-60895-45	319 -11	
13A-60895-5	319 -10	
13A-60895-51	319 -	
13A-60895-53	319 -	
13A-60901	319 -	1
13A-60901-3	319 -64	
13A-60910	320 -40	
13A-60911	319 - 1	
	320 -	
13A-60912	320 - 1	
13A-60913	320 -11	
13A-60914	320 - 5	
13A-60916	320 -22	
13A-60917	320 -24	
13A-60918	320 -23	
13A-60919	320 - 2	
13A-60919-1	320 - 3	
13A-60920	320 -15	
13A-60921	320 - 7	
13A-60922	320 -20	
13A-60923	320 -19	
13A-60925	320 -17	
13A-60927	320 -16	
13A-60928	320 -10	
13A-60929	320 -31	
13A-60930	320 -33	
13A-60931	320 -36	
13A-60932	320 -37	
13A-60933	320 -34	
13A-60934	320 -39	
13A-60935	320 - 8	
13A-60937	320 -21	
13A-60940	319 -	
13A-60940-12	319 - 5	
13A-60940-14	319 - 4	
13A-60940-25	319 -	
13A-60940-26	319 -	
13A-60940-30	319 -	
13A-60941	319 -	
13A-60942	319 -24	
13A-60943	319 -22	
13A-60944	319 -21	
13A-60945	319 -23	
13A-60950	319 -	
13A-60950-14	319 -36	
13A-60950-16	319 -	
13A-60950-2	319 -29	
13A-60950-4	319 -30	
13A-60950-6	319 -32	
13A-60950-8	319 -34	
13A-60951	319 -	
13A-60951-3	319 -39	
13A-60951-5	319 -42	
13A-60952	319 -41	

PART NUMBER	FIGURE AND INDEX NUMBER	QUANTITY
13A-60953-1	319 -40	
13A-60953-2	319 -	
13A-60955	319 -49	
13A-60956	319 -	
13A-60957	319 -51	
13A-62001	104 -	REF
	106 - 1	
13A-62001	102 -	1
13A-62002-11	108 -	2
13A-62002-123	108 -	2
13A-62002-125	108 -15	1
13A-62002-127	108 -30	1
13A-62002-129	108 -	1
13A-62002-13	108 -19	1
13A-62002-131	108 -	1
13A-62002-133	108 -	1
13A-62002-139	108 -34	1
13A-62002-14	108 -	1
13A-62002-141	108 -	1
13A-62002-143	108 -33	1
13A-62002-17	108 -41	3
13A-62002-19	108 -40	1
13A-62002-23	108 - 1	1
13A-62002-25	108 - 4	1
13A-62002-27	108 - 5	1
13A-62002-28	108 - 6	1
13A-62002-29	108 - 8	1
13A-62002-30	108 -	1
13A-62002-31	108 - 7	1
13A-62002-32	108 -	1
13A-62002-33	108 -	1
13A-62002-37	108 -31	1
13A-62002-38	108 -	1
13A-62002-43	108 -32	1
13A-62002-53	108 - 2	1
13A-62002-57	108 -	1
13A-62002-63	108 -16	1
13A-62002-65	108 - 3	1
13A-62002-7	108 -46	1
13A-62002-79	108 -36	1
13A-62002-80	108 -14	
	108 -28	
	108 -45	9
13A-62002-808	102 - 4	REF
	103 - 3	
13A-62002-808	108 -	NP
13A-62002-849	108 -	1
13A-62002-85	108 -	
	108 -	3
13A-62002-86	108 -	1
13A-62002-88	108 -	1
13A-62002-9	108 -17	1
13A-62002-919	108 -	2
13A-62002-921	108 -18	1
13A-62002-926	108 -	1
13A-62002-927	108 -21	1
13A-62002-928	108 -	1
13A-62002-929	108 -20	1
13A-62002-94	108 -51	1
13A-62002-97	108 -47	1
13A-62002-98	108 -48	1
13A-62003	104 -32	1
13A-62004	108 -10	
	108 -24	6
13A-62006	108 -	1
13A-62007	108 -	1
13A-62008	108 -	
	108 -23	3

PART NUMBER	FIGURE AND INDEX NUMBER	QUANTITY
13A-62012	108 -	1
13A-62012-10	108 -57	1
13A-62012-12	108 -56	1
13A-62012-2	108 -58	1
13A-62012-4	108 -55	1
13A-62012-8	108 -60	1
13A-62012-9	108 -61	1
13A-62013	108 -	1
13A-62014	108 -49	1
13A-62015	108 -	1
13A-64001	106 -	REF
	107 -	
	253 -	
	254 -	
13A-64001	252 -	NP
13A-64001-17	252 -55	AR
13A-64001-19	252 -	
13A-64001-21	252 -	1
13A-64001-23	252 -	1
13A-64001-25	252 -	1
13A-64001-3	253 -25	1
13A-64001-7	253 -	1
13A-64002	253 - 1	REF
13A-64002	250 -	1
13A-64003	250 -	1
13A-64003-3	250 - 1	
13A-64004	252 -	REF
13A-64004	251 -	NP
13A-64005	251 -14	1
13A-64006-3	251 -10	1
13A-64006-5	251 -	1
13A-64007-3	251 -11	1
13A-64007-5	251 -	1
13A-64008	251 -13	1
13A-64009	254 -	1
13A-64009-805	254 -	1
13A-64010-1	254 - 1	1
13A-64011	254 - 4	1
13A-64012	254 -	1
13A-64013	254 -	1
13A-64013-3	254 -	1
13A-64014	254 - 2	1
13A-64014-3	254 -	1
13A-64015-1	254 - 9	1
13A-64016	32 -39	REF
13A-64017	254 -10	1
13A-64018	250 -	1
13A-64018-3	250 -25	1
13A-64019	250 -23	1
13A-64020	250 -28	1
13A-64021	253 - 2	REF
13A-64021	282 -	NP
13A-64021-3	282 -17	2
13A-64022	62 -	1
13A-64023-10	282 -20	1
13A-64023-12	283 - 7	REF
13A-64023-12	282 - 7	1
13A-64023-14	283 - 9	REF
	284 -10	
13A-64023-14	282 -13	1
13A-64023-16	282 -38	1
13A-64023-18	253 -43	
	282 -33	2
13A-64023-2	283 - 8	REF
13A-64023-2	282 - 4	1
13A-64023-20	282 -12	1
13A-64023-22	282 - 9	1
13A-64023-24	256 -27	REF

PART NUMBER	FIGURE AND INDEX NUMBER	QUANTITY
13A-64023-24	253 -41	1
13A-64023-4	282 -31	1
13A-64023-6	284 -11	REF
13A-64023-6	282 -39	1
13A-64023-8	284 -12	REF
13A-64023-8	282 -10	1
13A-64024	282 -	1
13A-64025	282 -	1
13A-64026	282 -	1
13A-64027	256 -23	
	282 -24	2
13A-64028-107	253 -34	1
13A-64028-111	253 -	1
13A-64028-3	253 -30	1
13A-64028-5	252 -36	1
13A-64028-9	254 -20	1
13A-64029	282 -23	1
13A-64030	253 - 4	REF
13A-64030	255 -	NP
13A-64030-9	255 -15	1
13A-64031-1	258 -73	REF
13A-64031-1	16 -17	1
13A-64031-2	16 -	1
13A-64032	267 -13	2
13A-64033	267 - 9	2
13A-64037	255 -13	1
13A-64038	255 -20	REF
13A-64038	77 -49	1
13A-64039	255 - 9	1
13A-64039-800	255 -	1
13A-64040-19	74 - 4	1
13A-64040-23	74 -	1
13A-64040-25	74 -	1
13A-64040-27	74 - 3	1
13A-64040-29	74 - 5	1
13A-64040-31	74 - 6	1
13A-64040-802	74 -	1
13A-64040-9	74 -	1
13A-64051-800	251 -	
13A-64052	62 -57	1
13A-64062	282 - 2	REF
13A-64062	284 -	1
13A-64063	284 - 1	1
13A-64072	253 -24	1
13A-64073	253 -12	1
13A-64073-801	253 -	1
13A-64074	252 -72	REF
13A-64074	253 - 8	1
13A-64075	252 -33	1
13A-64077	253 -28	1
13A-64077-11	253 -	1
13A-64078	253 -29	1
13A-64084-11	61 -	1
13A-64084-13	32 -	1
13A-64084-15	32 -26	1
13A-64084-17	32 -27	1
13A-64084-5	61 - 5	1
13A-64085	253 - 3	REF
	282 -42	
13A-64085	256 -	NP
13A-64085-3	256 - 5	1
13A-64085-7	256 - 8	1
13A-64085-801	256 -	NP
13A-64086	256 -	1
13A-64086-3	256 - 1	1
13A-64086-5	256 - 2	1
13A-64086-9	256 - 3	1
13A-64087	256 -15	1

PART NUMBER	FIGURE AND INDEX NUMBER	QUANTITY
13A-64089	258 -57	
	259 -45	4
13A-64090-1	258 -53	
	259 -43	2
13A-64090-2	258 -	
	259 -	2
13A-64091-145	258 -58	
	259 -51	2
13A-64091-146	258 -	
	259 -	2
13A-64091-147	258 -10	1
13A-64091-148	258 -	1
13A-64091-149	258 -15	1
13A-64091-150	258 -	1
13A-64092	258 -49	2
13A-64094	258 -63	2
13A-64095-1	258 -76	REF
13A-64095-1	16 - 5	1
13A-64095-2	16 -	1
13A-64112	260 -	2
13A-64113	260 - 6	2
13A-64114	260 - 8	2
13A-64115	260 -10	2
13A-64116	260 - 9	2
13A-64117	253 -20	1
13A-65001	106 -	REF
13A-65001	269 -	NP
13A-65001-900	107 -	REF
13A-65001-900	269 -	NP
13A-65002	32 -38	REF
	269 -53	
13A-65002	63 -	1
13A-65002-801	63 -	1
13A-65011-4	269 -36	1
13A-65011-6	269 -41	1
13A-65011-8	269 -32	1
13A-65012	63 -62	1
13A-65013	269 -51	REF
13A-65013	63 -60	1
13A-65015	269 -26	1
13A-69009-1	110 -34	1
13A-69009-3	110 -35	1
13A-69009-7	110 -36	1
13A-69009-809	106 - 2	REF
13A-69009-809	110 -	1
13A-69009-813	110 -	
13A-69010-807	110 - 1	1
13A-69011	110 -30	
	111 -50	2
13A-69012	111 -	1
13A-69020-804	110 -31	
	111 -43	2
13A-69024-19	110 -	2
13A-69051	111 -31	2
13A-69058	111 -36	2
13A-71001	1 -	NP
13A-71002	1 -	NP
13A-71003	1 -	NP
13A-71062	73 -	REF
	208 -	
	209 -	
	210 -	
	211 -	
13A-71062	207 -	NP
13A-71062-900	238 -21	REF
13A-71062-900	207 -13	2
13A-71062-901	238 -22	REF
13A-71062-901	207 -14	2

PART NUMBER	FIGURE AND INDEX NUMBER	QUANTITY
13A-71064	36 -	REF
	196 -	
	197 -	
	198 -	
	199 -	
13A-71064	195 -	NP
13A-71105	73 - 5	1
13A-71106	73 - 4	1
13A-71106-50	73 -	1
13A-71108	73 - 7	1
13A-71109	73 -	1
13A-71109-13	73 -	1
13A-71111	73 -	1
13A-71112	73 -	1
13A-71113	73 - 6	1
13A-71114	222 - 2	1
13A-71117	60 -42	1
13A-71119	73 -18	1
13A-71120-1	209 -	1
13A-71120-2	208 -	1
13A-71120-3	209 -	1
13A-71120-4	208 -	1
13A-71120-6	207 -	1
13A-71120-8	207 -	1
13A-71121	195 -	1
13A-71122	211 -31	2
13A-71123	209 -24	1
13A-71125	75 -23	1
13A-71145	56 -48	1
13A-71146	56 -	1
13A-71146-3	56 -49	1
13A-71146-5	56 -50	1
13A-71146-9	56 -51	1
13A-71147	195 -69	REF
13A-71147	56 -	1
13A-71148-5	60 -45	1
13A-71148-7	60 -44	1
13A-71202	63 -	1
13A-71206-3	197 -	1
13A-71206-5	197 -	1
13A-71206-7	197 -	2
13A-71207	197 -	1
13A-71208	193 -72	REF
13A-71208	197 -18	1
13A-71209	63 - 1	REF
13A-71209	64 -	1
13A-71209-11	64 - 6	1
13A-71209-15	64 - 5	1
13A-71209-3	64 - 4	1
13A-71210	64 - 1	1
13A-71211	64 - 2	1
13A-71212	64 -	1
13A-71214	64 - 8	2
13A-71219-11	64 -24	1
13A-71219-13	64 -25	1
13A-71219-15	64 -21	1
13A-71219-3	64 -20	1
13A-71219-5	64 -19	1
13A-71219-7	64 -22	1
13A-71219-9	64 -23	1
13A-71220	73 -19	1
13A-71221-11	104 -	
	105 -	2
13A-71221-13	104 -	
	105 -	2
13A-71221-15	104 -	
	105 -	2
13A-71221-3	104 -	

PART NUMBER	FIGURE AND INDEX NUMBER	QUANTITY
13A-71221-3	105 -	2
13A-71221-5	104 -	
	105 -	2
13A-71221-7	104 -	
	105 -	2
13A-71221-9	104 -	
	105 -	2
13A-71222	104 -29	
	105 -29	2
13A-71223	229 - 2	1
13A-71224	229 - 1	1
13A-71225	198 -	
13A-71226	223 - 2	1
13A-71227	197 -21	1
13A-71229	64 - 3	1
13A-71231	207 - 9	1
13A-71301	195 - 1	REF
13A-71301	222 -	1
13A-71301-3	222 -	1
13A-71304	199 - 1	REF
13A-71304	230 -	1
13A-71304-800	230 -	1
13A-71305	198 - 4	REF
13A-71305	225 -	1
13A-71306	195 -	1
13A-71307	198 - 5	REF
13A-71307	230 -	1
13A-71307-3	230 -	1
13A-71308	210 -10	1
13A-71309	200 - 1	REF
13A-71309	231 -	1
13A-71309-3	231 -	1
13A-71309-803	231 -	1
13A-71401	117 -13	1
13A-71401-2	117 -	1
13A-71402	117 -15	1
13A-71403	196 - 1	REF
13A-71403	229 -	1
13A-71404	196 - 2	REF
13A-71404	226 -	1
13A-71405	198 - 3	REF
13A-71405	224 -	1
13A-71406-3	197 - 1	REF
13A-71406-3	223 -	1
13A-71407	226 -19	1
13A-71408	226 -20	1
13A-71602	102 - 2	REF
	103 - 1	
	104 -36	
	105 -34	
13A-71602	117 -	1
13A-71604	102 - 3	REF
	103 - 2	
	104 -37	
	105 -35	
13A-71604	117 -	1
13A-71810-11	194 -28	REF
13A-71810-11	195 -41	1
13A-71810-13	195 -45	1
13A-71810-15	195 -21	1
13A-71810-17	195 -27	1
13A-71810-19	195 -30	1
13A-71810-25	196 -33	1
13A-71810-27	195 -34	1
13A-71810-29	195 -42	1
13A-71810-3	195 - 5	1
13A-71810-31	195 -	1
13A-71810-33	195 -	1

PART NUMBER	FIGURE AND INDEX NUMBER	QUANTITY
13A-71810-35	195 -	1
13A-71810-37	195 -	1
13A-71810-39	195 -	1
13A-71810-41	195 -	1
13A-71810-43	195 -	1
13A-71810-45	195 -	1
13A-71810-5	195 -10	1
13A-71810-7	194 -29	REF
13A-71810-7	195 -33	1
13A-71810-9	195 -36	1
13A-71811-11	198 -	1
13A-71811-13	198 -	1
13A-71811-3	198 -30	1
13A-71811-5	230 -20	REF
13A-71811-5	198 -19	1
13A-71811-7	198 -47	1
13A-71811-9	198 -	1
13A-71812-1005	199 -	1
13A-71812-1007	199 -	1
13A-71812-1009	199 -	1
13A-71812-1015	199 -	1
13A-71812-1017	199 -	1
13A-71812-1019	199 -	1
13A-71812-1021	199 -	1
13A-71812-1023	199 -	1
13A-71812-1025	199 -	1
13A-71812-1027	199 -	1
13A-71812-1029	199 -	1
13A-71812-11	199 -10	1
13A-71812-13	205 -35	REF
13A-71812-13	199 -12	1
13A-71812-15	205 -34	REF
13A-71812-15	199 -13	1
13A-71812-17	199 -15	1
13A-71812-19	203 -24	REF
13A-71812-19	199 -17	1
13A-71812-21	199 -18	1
13A-71812-23	209 -29	REF
13A-71812-23	199 -20	1
13A-71812-25	199 -	1
13A-71812-27	199 -	1
13A-71812-29	209 -30	REF
13A-71812-29	199 - 3	1
13A-71812-31	198 -44	1
13A-71812-5	230 -22	REF
13A-71812-5	199 - 6	1
13A-71812-7	230 -23	REF
13A-71812-7	199 - 7	1
13A-71812-9	203 -23	REF
13A-71812-9	199 - 9	1
13A-71814-1049	211 -	1
13A-71814-1051	211 -	1
13A-71814-1053	210 -	1
13A-71814-1061	210 -	1
13A-71814-1063	210 -	1
13A-71814-1065	210 -	1
13A-71814-1067	210 -	1
13A-71814-1071	210 -	1
13A-71814-1073	210 -	1
13A-71814-1075	210 -	1
13A-71814-1077	210 -	1
13A-71814-1079	210 -	1
13A-71814-11	209 -32	REF
13A-71814-11	211 -21	1
13A-71814-13	210 -46	1
13A-71814-15	209 - 7	1
13A-71814-21	209 - 4	1
13A-71814-23	236 -14	REF

PART NUMBER	FIGURE AND INDEX NUMBER	QUANTITY
13A-71814-23	209 - 2	1
13A-71814-25	75 -25	REF
13A-71814-25	209 -16	1
13A-71814-27	236 -13	REF
13A-71814-27	209 -13	1
13A-71814-29	211 -32	REF
13A-71814-29	209 - 5	1
13A-71814-3	209 -22	1
13A-71814-31	230 -19	REF
13A-71814-31	210 -34	1
13A-71814-33	236 -15	REF
13A-71814-33	209 -14	1
13A-71814-35	211 -33	REF
13A-71814-35	210 -32	1
13A-71814-39	212 -30	1
13A-71814-41	212 -32	1
13A-71814-43	212 -38	1
13A-71814-45	212 -36	1
13A-71814-47	209 -	1
13A-71814-49	211 -	1
13A-71814-5	209 -31	REF
13A-71814-5	211 - 2	1
13A-71814-51	211 -	1
13A-71814-53	210 -	1
13A-71814-57	209 -	1
13A-71814-59	210 -	1
13A-71814-61	210 -	1
13A-71814-63	210 -	1
13A-71814-65	210 -	1
13A-71814-67	210 -	1
13A-71814-69	210 -	1
13A-71814-7	211 -34	REF
13A-71814-7	209 -23	1
13A-71814-71	210 -	1
13A-71814-73	210 -	1
13A-71814-75	210 -	1
13A-71814-77	210 -	1
13A-71814-79	210 -	1
13A-71814-81	210 -16	1
13A-71814-83	209 -18	1
13A-71814-9	209 -33	REF
13A-71814-9	211 -30	1
13A-71820-11	196 -22	1
13A-71820-13	196 -42	1
13A-71820-15	196 -30	1
13A-71820-17	196 -38	1
13A-71820-19	269 -50	REF
13A-71820-19	196 -41	1
13A-71820-21	196 -45	1
13A-71820-23	196 -40	1
13A-71820-25	269 -49	REF
13A-71820-25	196 -37	1
13A-71820-27	196 -44	1
13A-71820-29	196 -35	1
13A-71820-3	193 -73	REF
	221 -53	
13A-71820-3	196 -21	1
13A-71820-31	195 -64	1
13A-71820-33	221 -49	REF
13A-71820-33	193 -68	1
13A-71820-35	221 -48	REF
13A-71820-35	193 -69	1
13A-71820-37	104 -14	1
13A-71820-39	196 -	1
13A-71820-41	196 -46	1
13A-71820-43	196 -47	1
13A-71820-49	196 -	1
13A-71820-5	197 - 3	1

PART NUMBER	FIGURE AND INDEX NUMBER	QUANTITY
13A-71820-51	105 -12	1
13A-71820-53	197 - 6	1
13A-71820-7	197 -31	1
13A-71820-9	197 -27	1
13A-71821-1007	198 -	1
13A-71821-1009	198 -	1
13A-71821-1011	198 -	1
13A-71821-11	198 -15	1
13A-71821-13	224 -27	REF
13A-71821-13	198 - 8	1
13A-71821-15	198 -10	1
13A-71821-17	104 -23	1
13A-71821-19	104 -22	1
13A-71821-23	104 -25	1
13A-71821-25	104 -27	1
13A-71821-27	198 -	1
13A-71821-3	224 -28	REF
13A-71821-3	198 - 6	1
13A-71821-31	105 -21	1
13A-71821-33	105 -24	1
13A-71821-35	105 -22	1
13A-71821-37	105 -28	1
13A-71821-5	198 -23	1
13A-71821-7	208 -37	REF
13A-71821-7	198 -32	1
13A-71821-9	208 -36	REF
13A-71821-9	198 -36	1
13A-71823-3	207 -20	1
13A-71823-5	207 - 8	1
13A-71823-7	207 -11	1
13A-71823-9	207 -18	1
13A-71824-11	208 -16	1
13A-71824-13	212 -13	1
13A-71824-15	212 -16	1
13A-71824-17	212 -22	1
13A-71824-19	212 -20	1
13A-71824-21	212 -14	1
13A-71824-23	212 -17	1
13A-71824-25	212 -24	1
13A-71824-3	208 - 4	1
13A-71824-5	208 -31	1
13A-71825-1009	211 -	1
13A-71825-1011	211 -	1
13A-71825-1013	211 -	1
13A-71825-1015	211 -	1
13A-71825-11	211 -	1
13A-71825-13	211 -	1
13A-71825-15	211 -	1
13A-71825-17	211 -11	1
13A-71825-3	239 -16	REF
13A-71825-3	211 -20	1
13A-71825-5	239 -17	REF
13A-71825-5	211 -28	1
13A-71825-7	211 -	1
13A-71825-9	211 -	1
13A-71826-11	193 -59	1
13A-71826-13	221 -50	REF
13A-71826-13	193 -63	1
13A-71826-15	221 -52	REF
13A-71826-15	193 -65	1
13A-71826-17	193 -66	1
13A-71826-21	193 - 8	1
13A-71826-23	193 -	1
13A-71826-3	193 -61	1
13A-71826-5	221 -51	REF
13A-71826-5	193 -64	1
13A-71826-7	193 -56	1
13A-71826-9	191 -59	REF

PART NUMBER	FIGURE AND INDEX NUMBER	QUANTITY
13A-71826-9	193 -54	1
13A-71827-1003	193 -	1
13A-71827-3	198 -51	REF
13A-71827-3	193 -14	1
13A-71827-5	193 -	1
13A-71830-101	195 -	1
13A-71830-103	197 -	1
13A-71830-105	197 -	1
13A-71830-107	197 -	1
13A-71830-109	197 -	1
13A-71830-11	195 - 3	1
13A-71830-111	197 -	1
13A-71830-113	196 -	1
13A-71830-115	197 -	1
13A-71830-117	197 -	1
13A-71830-13	195 - 8	1
13A-71830-15	195 -70	REF
	222 -20	
	226 -21	
13A-71830-15	196 -24	1
13A-71830-17	195 -16	1
13A-71830-19	195 -22	1
13A-71830-21	195 -15	1
13A-71830-23	197 -26	1
13A-71830-25	197 -24	1
13A-71830-27	195 -62	1
13A-71830-29	195 -31	1
13A-71830-3	197 - 5	1
13A-71830-31	195 -38	1
13A-71830-33	197 -22	1
13A-71830-35	196 -15	1
13A-71830-37	196 -10	1
13A-71830-39	197 -33	1
13A-71830-41	197 -45	1
13A-71830-43	197 -52	1
13A-71830-45	197 -59	1
13A-71830-47	197 -41	1
13A-71830-49	197 -49	1
13A-71830-5	197 - 9	1
13A-71830-51	197 -56	1
13A-71830-53	197 -61	1
13A-71830-55	197 -53	1
13A-71830-57	197 -46	1
13A-71830-59	226 -22	REF
13A-71830-59	196 -29	1
13A-71830-61	195 -17	1
13A-71830-63	195 -23	1
13A-71830-65	197 -	1
13A-71830-67	197 -	1
13A-71830-69	195 -	1
13A-71830-7	197 -16	1
13A-71830-75	195 - 9	1
13A-71830-77	197 -	1
13A-71830-79	197 -	1
13A-71830-81	197 -	1
13A-71830-83	197 -	1
13A-71830-85	197 -	1
13A-71830-87	197 -	1
13A-71830-89	197 -	1
13A-71830-9	197 -20	1
13A-71830-91	197 -	1
13A-71830-93	197 -	1
13A-71830-95	197 -	1
13A-71830-97	197 -	1
13A-71830-99	197 -	1
13A-71831-1021	198 -	1
13A-71831-11	224 -29	REF
	230 -21	

PART NUMBER	FIGURE AND INDEX NUMBER	QUANTITY
13A-71831-11	198 -22	1
13A-71831-13	198 -40	1
13A-71831-15	198 -11	1
13A-71831-17	198 -	1
13A-71831-19	198 -	1
13A-71831-3	198 -26	1
13A-71831-5	198 -28	1
13A-71831-7	198 -38	1
13A-71831-9	198 -17	1
13A-71851-1007	202 -	1
13A-71851-1009	202 -	1
13A-71851-1011	202 -	1
13A-71851-1013	202 -	1
13A-71851-3	202 - 6	1
13A-71851-5	202 -20	1
13A-71851-7	202 -17	1
13A-71851-9	206 -16	REF
13A-71851-9	202 -19	1
13A-71861-1011	204 -	1
13A-71861-1013	204 -19	1
13A-71861-1015	204 -	1
13A-71861-3	204 -21	1
13A-71861-5	204 -22	1
13A-71861-7	204 -18	1
13A-71861-9	204 - 6	1
13A-71871-1003	200 -	1
13A-71871-1007	200 -	1
13A-71871-1009	200 -	1
13A-71871-1011	200 -	1
13A-71871-1017	200 -	1
13A-71871-1019	200 -	1
13A-71871-1021	200 -	1
13A-71871-1023	200 -	1
13A-71871-1029	200 -	1
13A-71871-1031	200 -	1
13A-71871-11	204 -29	REF
13A-71871-11	200 -19	1
13A-71871-13	200 -48	1
13A-71871-15	200 -46	1
13A-71871-17	200 -47	1
13A-71871-19	200 -49	1
13A-71871-21	200 -53	1
13A-71871-23	200 -55	1
13A-71871-25	200 -	1
13A-71871-27	200 -	1
13A-71871-29	200 -	1
13A-71871-3	200 -15	1
13A-71871-31	200 -	1
13A-71871-5	200 -13	1
13A-71871-7	200 - 9	1
13A-71871-9	202 -26	REF
13A-71871-9	200 - 7	1
13A-72001	39A-	1
13A-74001	36 -	REF
	275 -	
	276 -	
	277 -	
	278 -	
	279 -	
	280 -	
13A-74001	271 -	NP
13A-74001-10	271 -	NP
13A-74006	271 -41	1
13A-74030	272 -16	1
13A-74031	272 -17	1
13A-74032	272 -18	1
13A-74033	272 - 2	1
13A-74034	58 -32	1

PART NUMBER	FIGURE AND INDEX NUMBER	QUANTITY
13A-74035	272 -29	1
13A-74036	272 -30	1
13A-74038	271 - 4	1
13A-74039	271 -50	REF
13A-74039	102 -24	1
13A-74040	272 -36	1
13A-74044	62 -	1
13A-74047	278 -	4
13A-74092	272 -32	1
13A-74093	272 -33	1
13A-74094	279 -	1
13A-83010	121 -	1
13A-83011	121 -25	1
13A-83012	121 -22	1
13A-83013	68 -17	
	69 -	2
13A-83013-2	68 -	
	69 -	2
13A-83013-4	68 -	
	69 -16	2
13A-83014	55 -	2
13A-83015	55 -22	1
13A-83016-10	55 -23	1
13A-83017-10	55 -	1
13A-83018	68 -15	
	69 -	2
13A-83018-2	68 -	
	69 -15	2
13A-83018-6	69 -	1
13A-83018-802	69 -	1
13A-83018-804	68 -	
13A-83019	118 -37	1
13A-83020	121 -21	1
13A-83021	121 -26	1
13A-83022-10	68 -22	
	69 -21	2
13A-83022-2	68 -	
	69 -	2
13A-83022-4	69 -22	1
13A-83023	68 -18	
	69 -18	2
13A-83024	70 -48	1
13A-86001	1 -	REF
13A-86001	50 -	NP
13A-86001-3	50 -19	AR
13A-86001-5	50 -20	AR
13A-86001-7	50 -18	2
13A-86001-9	50 -29	1
13A-86002	50 -27	1
13A-86003	50 -16	1
13A-86004	50 -17	1
13A-86005-4	70 -68	REF
13A-86005-4	120 -	1
13A-91030-10	66 -14	2
13A-93002	132 -49	1
13A-93003	132 -50	1
13A-93004	132 -42	1
13A-93005	132 -41	1
13A-93006-3	132 -40	1
13A-93006-5	132 -	1
13A-93007	132 -	2
13A-93007-3	132 -48	2
13A-93007-5	132 -	2
13A-93008	135 -36	1
13A-93009	135 -35	1
13A-93010	137 -20	1
13A-93010-3	137 -	1
13A-93011	132 -	1

PART NUMBER	FIGURE AND INDEX NUMBER	QUANTITY
13A-93011-3	132 -	1
13A-93011-5	132 -	1
13A-93012	132 -	1
13A-93012-3	132 -	1
13A-93012-5	132 -	1
13A-93013	137 -19	1
13A-93013-3	137 -	1
13A-95004	102 - 1	REF
13A-95004	112 -	NP
13A-95005	112 -	1
13A-95005-3	112 -41	1
13A-96050	1 -	REF
	139 -	
13A-96050	138 -	NP
13A-96051-3	139 -	1
13A-96051-5	139 -	1
13A-96051-7	138 -	1
13A-96052-103	139 -12	2
13A-96052-105	139 -27	1
13A-96052-107	139 -34	1
13A-96052-109	138 - 9	1
13A-96052-111	138 -14	1
13A-96060	139 -21	1
13A-96061	56 -27	1
13A-96062	139 -20	1
13A-96063	139 -16	1
13A-96064	139 -17	1
13A-96065	139 -30	1
13A-96068	139 -28	1
13A-96072	139 -	1
13A-96073	139 -32	1
13A-96074-3	303 -28	1
13A-96074-5	303 -29	1
13A-96075	60 -14	1
13A-96076	60 -37	1
13A-96077	56 -	1
13A-96079	139 -	1
13A-96080	74 -15	1
13A-96081	139 -23	1
13A-96082	139 -22	1
13A-96083	139 -	2
13A-96084	100 -	1
13B-00001	1 -	1
13B-00001-830	1 -	REF
13B-00001-830	72 -	
13B-00001-832	72 -	
13B-10010-1	20 -	1
13B-10010-10	20 -	1
13B-10010-11	20 - 9	1
13B-10010-12	20 -	1
13B-10010-13	20 - 8	1
13B-10010-14	20 -	1
13B-10010-15	20 - 6	1
13B-10010-16	20 -	1
13B-10010-17	20 - 4	1
13B-10010-18	20 -	1
13B-10010-19	20 - 1	1
13B-10010-2	20 -	1
13B-10010-20	20 -	1
13B-10010-21	20 -	2
13B-10010-23	20 -	2
13B-10010-25	20 - 7	2
13B-10010-27	20 - 5	2
13B-10010-29	20 -	1
13B-10010-3	20 -16	1
13B-10010-30	20 -	1
13B-10010-31	20 -	1
13B-10010-32	20 -	1

PART NUMBER	FIGURE AND INDEX NUMBER	QUANTITY
13B-10010-33	20 -	1
13B-10010-34	20 -	1
13B-10010-35	20 -	1
13B-10010-36	20 -	1
13B-10010-37	20 - 2	1
13B-10010-38	20 -	1
13B-10010-39	20 -14	1
13B-10010-4	20 -	1
13B-10010-40	20 -	1
13B-10010-41	20 -	2
13B-10010-43	20 -	8
13B-10010-5	20 -17	1
13B-10010-6	20 -	1
13B-10010-63	20 -	1
13B-10010-64	20 -	1
13B-10010-65	20 -	1
13B-10010-66	20 -	1
13B-10010-67	20 -	1
13B-10010-68	20 -	1
13B-10010-7	20 -13	1
13B-10010-8	20 -	1
13B-10010-801	20 -	
	20 -	1
13B-10010-802	20 -	
	20 -	1
13B-10010-805	20 -	
	20 -	1
13B-10010-806	20 -	
	20 -	1
13B-10010-9	20 -10	1
13B-10011-1	20 -	1
13B-10011-10	20 -	1
13B-10011-11	20 -25	1
13B-10011-12	20 -	1
13B-10011-13	20 -27	1
13B-10011-14	20 -	1
13B-10011-15	20 -28	1
13B-10011-16	20 -	1
13B-10011-17	20 -29	1
13B-10011-18	20 -	1
13B-10011-19	20 -31	1
13B-10011-2	20 -	1
13B-10011-20	20 -	1
13B-10011-21	20 -32	1
13B-10011-22	20 -	1
13B-10011-23	20 -33	1
13B-10011-24	20 -	1
13B-10011-25	20 -	2
13B-10011-27	20 -	2
13B-10011-29	20 -	2
13B-10011-3	20 -35	1
13B-10011-31	20 -	2
13B-10011-33	20 -26	2
13B-10011-35	20 -30	2
13B-10011-37	20 -20	1
13B-10011-38	20 -	1
13B-10011-39	20 -21	1
13B-10011-4	20 -	1
13B-10011-40	20 -	1
13B-10011-41	20 -	1
13B-10011-42	20 -	1
13B-10011-43	20 -	1
13B-10011-44	20 -	1
13B-10011-45	20 -22	1
13B-10011-46	20 -	1
13B-10011-47	20 -23	1
13B-10011-48	20 -	1
13B-10011-49	20 -	1

PART NUMBER	FIGURE AND INDEX NUMBER	QUANTITY
13B-10011-5	20 -36	1
13B-10011-50	20 -	1
13B-10011-51	20 -	1
13B-10011-52	20 -	1
13B-10011-53	20 -34	1
13B-10011-54	20 -	1
13B-10011-55	20 -	8
13B-10011-6	20 -	1
13B-10011-63	20 -	1
13B-10011-64	20 -	1
13B-10011-65	20 -	1
13B-10011-66	20 -	1
13B-10011-67	20 -	1
13B-10011-68	20 -	1
13B-10011-7	20 -18	1
13B-10011-8	20 -	1
13B-10011-801	20 -	
	20 -	1
13B-10011-802	20 -	
	20 -	1
13B-10011-803	20 -	
	20 -	1
13B-10011-804	20 -	
	20 -	1
13B-10011-9	20 -24	1
13B-10012-1	20 -	1
13B-10012-10	20 -	1
13B-10012-11	20 -38	1
13B-10012-12	20 -	1
13B-10012-13	20 -39	1
13B-10012-14	20 -	1
13B-10012-15	20 -40	1
13B-10012-16	20 -	1
13B-10012-17	20 -41	1
13B-10012-18	20 -	1
13B-10012-19	20 -42	1
13B-10012-2	20 -	1
13B-10012-20	20 -	1
13B-10012-21	20 -43	1
13B-10012-22	20 -	1
13B-10012-23	20 -44	1
13B-10012-24	20 -	1
13B-10012-25	20 -	2
13B-10012-27	20 -	2
13B-10012-29	20 -	2
13B-10012-3	20 -48	1
13B-10012-31	20 -	2
13B-10012-39	20 -	1
13B-10012-4	20 -	1
13B-10012-40	20 -	1
13B-10012-41	20 -	1
13B-10012-42	20 -	1
13B-10012-43	20 -	1
13B-10012-44	20 -	1
13B-10012-45	20 -	1
13B-10012-46	20 -	1
13B-10012-47	20 -	1
13B-10012-48	20 -	1
13B-10012-49	20 -	1
13B-10012-5	20 -47	1
13B-10012-50	20 -	1
13B-10012-51	20 -	1
13B-10012-52	20 -	1
13B-10012-53	20 -	1
13B-10012-54	20 -	1
13B-10012-55	20 -46	1
13B-10012-56	20 -	1
13B-10012-57	20 -	8

PART NUMBER	FIGURE AND INDEX NUMBER	QUANTITY
13B-10012-6	20 -	1
13B-10012-63	20 -	1
13B-10012-64	20 -	1
13B-10012-65	20 -	1
13B-10012-66	20 -	1
13B-10012-67	20 -	1
13B-10012-68	20 -	1
13B-10012-7	20 -45	1
13B-10012-8	20 -	1
13B-10012-801	20 -	
	20 -	1
13B-10012-802	20 -	
	20 -	1
13B-10012-803	20 -	
	20 -	1
13B-10012-804	20 -	
	20 -	1
13B-10012-9	20 -37	1
13B-10013-1	20 -	1
13B-10013-10	20 -	1
13B-10013-11	20 -55	1
13B-10013-12	20 -	1
13B-10013-13	20 -54	1
13B-10013-14	20 -	1
13B-10013-15	20 -53	1
13B-10013-16	20 -	1
13B-10013-17	20 -52	1
13B-10013-18	20 -	1
13B-10013-19	20 -51	1
13B-10013-2	20 -	1
13B-10013-20	20 -	1
13B-10013-21	20 -50	1
13B-10013-22	20 -	1
13B-10013-23	20 -49	1
13B-10013-24	20 -	1
13B-10013-25	20 -	2
13B-10013-27	20 -	2
13B-10013-29	20 -	2
13B-10013-3	20 -60	1
13B-10013-31	20 -	2
13B-10013-37	20 -57	1
13B-10013-38	20 -	1
13B-10013-39	20 -	1
13B-10013-4	20 -	1
13B-10013-40	20 -	1
13B-10013-41	20 -	1
13B-10013-42	20 -	1
13B-10013-43	20 -	1
13B-10013-44	20 -	1
13B-10013-45	20 -	1
13B-10013-46	20 -	1
13B-10013-47	20 -59	1
13B-10013-48	20 -	1
13B-10013-49	20 -	8
13B-10013-5	20 -61	1
13B-10013-6	20 -	1
13B-10013-63	20 -	1
13B-10013-64	20 -	1
13B-10013-65	20 -	1
13B-10013-66	20 -	1
13B-10013-67	20 -	1
13B-10013-68	20 -	1
13B-10013-7	20 -58	1
13B-10013-8	20 -	1
13B-10013-801	20 -	
	20 -	1
13B-10013-802	20 -	
	20 -	1

PART NUMBER	FIGURE AND INDEX NUMBER	QUANTITY
13B-10013-803	20 -	
	20 -	1
13B-10013-804	20 -	
	20 -	1
13B-10013-9	20 -56	1
13B-10014-3	20 -11	
	20 -	
	20 -	
	20 -	
	20 -	
	20 -	6
13B-10014-4	20 -	
	20 -19	
	20 -	
	20 -	
	20 -	
	20 -	6
13B-10021-1	20 -15	
	20 -	
	20 -	
	20 -	30
13B-10022-3	20 -	
	20 -	4
13B-10022-5	20 -	1
13B-10022-6	20 -	1
13B-10023-3	20 -	
	20 -	
	20 -	
	20 -	14
13B-10023-5	20 -	
	20 -	
	20 -	5
13B-10023-6	20 -	
	20 -	
	20 -	5
13B-13007-1	8 - 2	REF
	19 -	
	19A-	
13B-13007-1	18 -	1
13B-13007-10	19A-	1
13B-13007-11	19 -27	1
13B-13007-12	19 -	1
13B-13007-13	19A-36	1
13B-13007-135	19 -22	1
13B-13007-136	19 -	1
13B-13007-14	19A-	1
13B-13007-15	19 -30	1
13B-13007-16	19 -	1
13B-13007-19	19 - 7	1
13B-13007-2	8 -	REF
	19 -	
	19A-	
13B-13007-2	18 -	1
13B-13007-20	19 -	1
13B-13007-200	19 -18	2
13B-13007-21	19 - 6	1
13B-13007-22	19 -	1
13B-13007-23	19 -21	1
13B-13007-24	19 -	1
13B-13007-243	19 -32	2
13B-13007-25	19 -20	1
13B-13007-26	19 -	1
13B-13007-27	19 -23	1
13B-13007-28	19 -	1
13B-13007-29	19 -	1
13B-13007-3	19A-34	1
13B-13007-30	19 -	1
13B-13007-31	19A-26	1

PART NUMBER	FIGURE AND INDEX NUMBER	QUANTITY
13B-13007-32	19A-	1
13B-13007-321	19 -	1
13B-13007-322	19 -	1
13B-13007-33	19A-35	1
13B-13007-34	19A-	1
13B-13007-35	19 -29	1
13B-13007-36	19 -	1
13B-13007-4	19A-	1
13B-13007-5	19 -28	1
13B-13007-6	19 -	1
13B-13007-7	19 -26	1
13B-13007-8	19 -	1
13B-13007-801	18 -	1
13B-13007-805	18 -	1
13B-13007-806	18 -	1
13B-13007-807	18 -	
13B-13007-808	18 -	
13B-13007-9	19A-33	1
13B-13008-1	10 -	NP
13B-13008-2	10 -	1
13B-13008-3	10 -45	1
13B-13008-4	10 -	1
13B-13008-5	10 -46	1
13B-13008-6	10 -	1
13B-13008-801	10 -	2
13B-13009-1	9 -	NP
13B-13009-2	9 -	NP
13B-13009-3	11 -28	REF
13B-13009-3	9 -44	1
13B-13009-4	9 -	1
13B-13009-5	9 -45	1
13B-13009-6	9 -	1
13B-13009-7	9 -	2
13B-13010-3	21 - 1	1
13B-13010-4	21 -	1
13B-13011-1	19A-23	1
13B-13011-2	19A-	1
13B-13011-31	19A-	1
13B-13011-32	19A-	1
13B-13011-33	19A-	1
13B-13011-34	19A-	1
13B-13011-5	19A-25	1
13B-13011-6	19A-	1
13B-13015-1	10 -	1
13B-13015-2	10 -	1
13B-13021-1	9 -	NP
13B-13021-11	9 -	2
13B-13021-13	9 -	2
13B-13021-15	9 -26	1
13B-13021-16	9 -	1
13B-13021-2	9 -	NP
13B-13021-3	9 -25	1
13B-13021-4	9 -	1
13B-13021-5	9 -	2
13B-13021-7	9 -	4
13B-13021-9	9 -	2
13B-13024-10	21 -13	1
13B-13024-12	21 -15	1
13B-13024-13	21 -	1
13B-13024-15	21 - 4	1
13B-13024-17	21 -14	1
13B-13024-19	21 -11	1
13B-13024-2	21 - 8	1
13B-13024-20	8 - 6	REF
	167 -11	
13B-13024-20	21 -	1
13B-13024-21	8 -	REF
13B-13024-21	21 -	1

PART NUMBER	FIGURE AND INDEX NUMBER	QUANTITY
13B-13024-3	21 -	1
13B-13024-30	21 -	4
13B-13024-4	21 -18	2
13B-13024-6	21 -19	1
13B-13024-7	21 -	1
13B-13024-8	21 -12	1
13B-13024-9	21 -	1
13B-13025-1	19 -43	REF
13B-13025-1	1 -	1
13B-13025-2	1 - 2	1
13B-13026-1	15 -	
	19 -	2
13B-13026-10	19 -	1
13B-13026-2	15 -	
	19 -	2
13B-13026-3	15 -51	
	19 -41	2
13B-13026-4	15 -	
	19 -	2
13B-13026-5	19 -	1
13B-13026-6	19 -	1
13B-13026-7	19 -38	1
13B-13026-8	19 -	1
13B-13026-9	19 -	1
13B-15011	25 -	NP
13B-15011-11	25 -	2
13B-15011-13	25 -	2
13B-15011-15	25 -	2
13B-15011-17	25 -	2
13B-15011-19	25 -	1
13B-15011-21	25 -	2
13B-15011-23	25 -	2
13B-15011-25	25 -	2
13B-15011-3	25 -	2
13B-15011-5	25 -	2
13B-15011-7	25 -	2
13B-15011-800	25 -	
13B-15011-9	25 -	2
13B-21020-5	27 -	2
13B-21020-7	27 -	2
13B-21021	28 -	
13B-21022	26 -	REF
13B-21022	28A-	2
13B-21022-3	28A-58	2
13B-21022-4	28A-59	2
13B-21022-5	28A-60	2
13B-21023-1	28A- 8	2
13B-21023-2	28A- 9	2
13B-21026	28A-	2
13B-21027	28A-	2
13B-21028-3	28A-	2
13B-21028-5	28A-	2
13B-21029	28A-36	2
13B-21030	28A-57	2
13B-21031	28A-49	2
13B-21032	28A- 2	2
13B-21033-11	28A-	2
13B-21033-13	28A-	2
13B-21033-3	28A-	2
13B-21033-5	28A-	2
13B-21033-7	28A-	2
13B-21033-9	28A-	2
13B-21034	28A-23	2
13B-21035	28A-35	2
13B-21036	28A-27	2
13B-21037	28A-	4
13B-21038	28A-25	2
13B-21039	28A-21	2

PART NUMBER	FIGURE AND INDEX NUMBER	QUANTITY
13B-30003-7	34 - 2	2
13B-30003-9	34 -	2
13B-30004-3	34 - 7	2
13B-30006	26 -	2
13B-31010	40 -	2
13B-32030	254 -	1
13B-32032	254 -	1
13B-32032-3	254 -12	1
13B-32032-5	254 -	1
13B-34021-1	73 -17	1
13B-34021-2	73 -	1
13B-34100-1	74 -19	1
13B-34100-2	74 -	1
13B-34101	32 -30	
	73 -22	3
13B-34101-3	32 -	2
13B-41011	65A-	1
13B-41018	93 -	2
13B-41018-2	93 -23	2
13B-41018-4	93 -24	2
13B-42001	87 -	
13B-42014	87 -	1
13B-50003-1	6 -	REF
	166 -	
	170 -	
13B-50003-1	167 -	NP
13B-50003-2	6 -	REF
	170 -	
13B-50003-2	167 -	NP
13B-50009-1	6 -	REF
13B-50009-1	169 -	NP
13B-50009-2	6 -	REF
13B-50009-2	169 -	NP
13B-50026	153 -	1
13B-50027	162 -	1
13B-50028	162 - 5	1
13B-50029	149 -10	1
13B-50031	71 -	1
13B-50032	71 -	1
13B-50500-2	148 - 5	1
13B-50500-3	148 -11	1
13B-50500-4	148 - 9	1
13B-50500-6	148 -	1
13B-50500-7	148 -	1
13B-51001	140 -39	1
13B-51001-800	140 -	
13B-51002	141 -	1
13B-51003	285 -16	1
13B-51004	140 -	1
13B-51004-2	140 -	1
13B-51004-800	140 -	1
13B-51004-802	140 -	
13B-51005	1 -	REF
13B-51005	148 -	NP
13B-51006	141 -26	REF
13B-51006	67 -38	1
13B-51006-10	67 -	1
13B-51007	141 -18	1
13B-51022	140 -	1
13B-51022-2	140 -	1
13B-51030	9 -	1
13B-51031	163 -	1
13B-51034	141 - 5	1
13B-52010-20	293A- 1	REF
13B-52010-20	295 -	NP
13B-52011	295 -12	1
13B-52012	307 -	1
13B-52013	307 -	1

PART NUMBER	FIGURE AND INDEX NUMBER	QUANTITY
13B-52014	295 -	1
13B-52014-3	295 -23	1
13B-52014-5	295 -24	1
13B-52015	295 -	2
13B-52018	291 -12	1
13B-52032	289 -38	1
13B-52033	293 - 9	1
13B-52034-10	289 -49	1
13B-52034-2	289 -	1
13B-52034-6	289 -44	1
13B-52037-2	288 -27	1
13B-52037-4	289 -55	1
13B-52037-6	289 -56	1
13B-52037-8	293A-19	1
13B-52039	53 -39A	1
13B-52040-10	288 - 6	1
13B-52043	141 - 4A	1
13B-52045	142 -25	1
13B-52049-2	288 - 4	1
13B-52052-12	157 -	1
13B-52052-14	157 - 9A	1
13B-52052-26	288 - 1	1
13B-52052-30	140 -53	1
13B-52053-2	288 -14	1
13B-53011	40 -	1
13B-53012	155 -29	1
13B-53012-3	155 -	1
13B-53012-5	155 -	1
13B-53013	307 -	1
13B-53015	142 -18	1
13B-53018	162 - 6	1
13B-53020	289 -	1
13B-53021	281 -	1
13B-53022	169 -43	4
13B-53023	173 -	1
13B-53024	134 -27	1
13B-53027	185 - 3	1
13B-53030	173 -22	1
13B-53031	173 -26	1
13B-53035	157 -24	1
13B-53036	153 -	3
13B-53037	153 -	1
13B-53038	153 -	4
13B-53040	171 - 3	1
13B-53042-2	173 -14	
	173 -	3
13B-53042-4	173 -16	
	173 -	3
13B-53043	173 -15	
	173 -	3
13B-53046	171 - 2	1
13B-60001	1 -	REF
13B-60001	107 -	NP
13B-60003-11	107 - 9	1
13B-60003-3	106 -	1
13B-60003-800	106 -	NP
13B-60003-802	107 -	NP
13B-60022	107 - 8	1
13B-60023	107 - 5	1
13B-60030	106 - 8	1
13B-60032	107 -19	REF
13B-60032	77 -	1
13B-61002	270 -	1
13B-62001	105 -	REF
	107 - 1	
13B-62001	103 -	1
13B-62001-4	105 -15	1
13B-62001-6	105 -	1

PART NUMBER	FIGURE AND INDEX NUMBER	QUANTITY
13B-64010-1	247 -	REF
13B-64010-1	259 -	NP
13B-64010-2	247 -	REF
13B-64010-2	259 -	NP
13B-64011-3	259 -54	2
13B-64012-1	259 -64	REF
13B-64012-1	19 -31	1
13B-64012-2	19 -	1
13B-64015	259 - 9	2
13B-66010	306 -	1
13B-66010-3	306 -	1
13B-69009-1	111 -51	1
13B-69009-12	111 -	1
13B-69009-3	111 -52	1
13B-69009-51	111 -	1
13B-69009-61	111 -	1
13B-69009-7	111 -53	1
13B-69009-806	107 - 2	REF
13B-69009-806	111 -	1
13B-69009-808	111 -	1
13B-69009-810	111 -	1
13B-69009-908	111 -	
13B-69010-1	111 - 2	1
13B-69010-11	111 -14	1
13B-69010-13	111 -	2
13B-69010-14	111 -	2
13B-69010-15	111 - 9	1
13B-69010-19	111 -	1
13B-69010-23	111 - 5	1
13B-69010-25	111 - 4	1
13B-69010-27	111 -	1
13B-69010-3	111 - 1	1
13B-69010-7	111 - 8	1
13B-69010-808	111 -	1
13B-69010-810	111 -	1
13B-69010-812	111 -	
13B-69010-9	111 -13	1
13B-69012	148 -	NP
13B-69012-810	148 -	NP
13B-69013	111 - 3	1
13B-69035	111 -11	7
13B-69036	111 -10	2
13B-69037	111 -	5
13B-69038	111 -	1
13B-69039-800	111 -45	1
13B-69040	111 - 7	4
13B-69041	111 -44	1
13B-69043	111 -	4
13B-69045	111 -	1
13B-69045-900	110 -27	
	111 -40	2
13B-69046-900	110 -	1
13B-69047	110 -	1
13B-69048	110 -33	
	111 -48	2
13B-69049	110 -28	
	111 -41	2
13B-69050	110 -13	
	110 -20	
	111 -22	
	111 -32	12
13B-69051	110 -12	
	110 -19	
	111 -21	5
13B-69052	110 -	
	111 -	4
13B-69053	110 -11	
	111 -20	4

PART NUMBER	FIGURE AND INDEX NUMBER	QUANTITY
13B-69054	110 -26	
	111 -35	4
13B-69055	110 -16	
	111 -27	2
13B-69056	110 -18	
	111 -29	2
13B-69057	110 -	
	110 -	
	111 -	
	111 -	7
13B-69058	110 -22	1
13B-69059	110 -	
	111 -	2
13B-69060	110 -14	
	110 -24	
	111 -23	
	111 -33	7
13B-69061	111 -30	2
13B-69062	106 -14	
	107 -14	2
13B-69063	111 -	2
13B-69063-26	111 -	2
13B-71012	60 -46	1
13B-74014	103 -11	1
13B-74015	271 - 2	1
13B-74016	271 -	1
13B-74018	281 -14	1
13B-79010-1	299 -	1
13B-79010-2	299 -56	1
13B-79011-1	299 -53	1
13B-79011-2	299 -	1
13B-79012	299 -60	2
13B-79022	297 -	2
13B-79030	70 -	1
13B-79031	70 -	1
13B-82001	71 -54	1
13B-83010-4	142 - 2	1
13B-83010-803	142 -	1
13B-83010-821	142 - 1	1
13B-83012	142 -11	1
13B-83013-5	123 -23	1
13B-83014	302 - 6	1
13B-85001-101	122 -	1
13B-85001-103	122 -	2
13B-85001-105	122 -	1
13B-85001-107	122 - 4	1
13B-85001-109	122 -	1
13B-85001-111	122 - 3	1
13B-85001-113	122 -	1
13B-85001-950	122 -	NP
13B-85001-951	122 -10	1
13B-85001-952	120 - 2	REF
13B-85001-952	122 -	NP
13B-85001-953	122 -11	1
13B-85001-955	122 -16	1
13B-85001-957	122 -17	1
13B-85026	120 -	1
13B-85026-801	120 - 3	1
13B-92019	134 -17	1
13B-95010	114 - 5	1
13B-95011	114 -28	1
13B-95013	116 -51	1
13B-95015	113 -	
	114 -	2
13B-95016	112 -	1
130-33508-950	100 -13	1
130-51066	157 -	
	158 -	2

PART NUMBER	FIGURE AND INDEX NUMBER	QUANTITY
130-52650	135 -30	2
130-53446-3	53 -11	1
130-53447-3	53 -10	1
130-53448-3	53 -12	1
130-53455-3	53 -	1
130-53455-7	53 -13	1
130-53455-9	53 -15	1
130-53456-5	53 -	AR
130-53456-950	53 -	1
130-58228	232 - 5	4
130-58557	311 -17	2
1300	168 -	
	168 -	
	169 -	
	169 -	
	169 -	
	169 -	
134-22405	29 -65	REF
134-22405	30 -37	1
134-31421	40 -	2
134-31423	40 -	2
134-31424-1	40 -25	1
134-31424-2	40 -	1
134-31427-10	40 -	1
134-31427-5	40 -	2
134-31427-9	40 -	1
134-31441	40 -	4
134-31916	57 -12	2
134-31922	57 -	2
134-31922-2	57 -	2
134-31922-4	57 -	2
134-43056	114 -	
	186 - 5	8
134-48081	250 -10	1
134-48082	250 - 7	1
134-48084	249 - 4	1
134-48085	249 - 5	1
134-48086	249 -	1
134-48086-3	249 -	1
134-48239	70 -35	
	70 -54	2
134-48331	266 - 9	
	268 -	4
134-48332	266 - 7	
	268 -	4
134-55010	44 -67	1
13476	194 - 1	1
1371-549065	231 -	
138106	115 -37	
	116 -42	4
138187	142 -22	1
139-9	83 -23	1
14	293 -42	1
140-S1-16D	269 -28	1
140-10008	5 -	1
140-10008-3	5 -47	1
140-10009-1	5 -35	1
140-10009-2	5 -	1
140-10010	5 -36	2
140-10012-3	5 - 7	30
140-12	95 -16	4
140-13029-21	3 -46	1
140-13029-22	3 -	1
140-13030-1	3 -47	1
140-13030-2	3 -	1
140-13033-3	3 -48	1
140-13035	9 -42	2
140-13036-1	4 - 5	2

PART NUMBER	FIGURE AND INDEX NUMBER	QUANTITY
140-14014-5	15 -44	
	19 -24	2
140-14014-6	15 -	
	19 -	2
140-14058	11 -13	
	11 -17	4
140-14062	12 -35	REF
140-14062	7 -	1
140-14062-3	7 -13	1
140-14069-1	14 -11	1
140-14069-2	14 -	1
140-14069-3	14 -	1
140-14069-4	14 -	1
140-14069-5	14 -	1
140-14069-6	14 -	1
140-14072-11	14 -51	1
140-14072-12	14 -	1
140-14073-11	14 -61	1
140-14073-12	14 -	1
140-14076-1	2 -31	REF
140-14076-1	9 -41	1
140-14076-2	9 -	1
140-14077-3	2 -32	REF
140-14077-3	9 -43	1
140-14077-4	9 -	1
140-14082-1	11 - 6	1
140-14082-2	11 -	1
140-14082-3	11 -	1
140-14082-4	11 -	1
140-14083-21	11 - 7	1
140-14083-22	11 -	1
140-14083-7	11 -	1
140-14083-8	11 -	1
140-14119	10 -52	2
140-14119-801	10 -	2
140-14147-3	13 -17	2
140-14147-5	13 -16	2
140-14154-1	14 -25	1
140-14154-2	14 -	1
140-14157	7 -14	2
140-14158	5 -42	
	13 -15	4
140-14166-3	6 -37	2
140-14166-5	2 -30	REF
140-14166-5	6 -35	2
140-14167	6 -36	2
140-14181	9 -	
	11 -20	
	14 -	
	14 -39	
	14 -48	
	14 -55	
	14 -	
	14 -67	16
140-14183	2 -18	2
140-14204-1	15 -	8
140-14205	7 - 1	
	7 - 2	28
140-14205-3	7 -	16
140-14206-1	12 -18	1
140-14206-2	12 -	1
140-14206-951	12 -	1
140-14206-952	12 -	1
140-14208-1	13 -14	1
140-14208-2	13 -	1
140-14216	15 -	4
140-14216-3	15 -	4
140-14218	247 -36	2

PART NUMBER	FIGURE AND INDEX NUMBER	QUANTITY
140-14219-3	248 -43	2
140-14219-5	248 -44	2
140-14222	247 -35	2
140-14245	7 -	16
140-17115	20 -12	
	20 -	
	20 -	
	20 -	12
140-17115-801	20 -	
	20 -	
	20 -	
	20 -	8
140-18004-11	23 -	2
140-18004-21	23 - 1	1
140-18004-22	23 -	1
140-18004-23	23 -	1
140-18004-24	23 -	1
140-18004-3	23 -	1
140-18004-4	23 -	1
140-18004-5	23 -	1
140-18004-6	23 -	1
140-18004-7	23 -	1
140-18004-8	23 -	1
140-18015	23 -29	
	23 -	8
140-18017-11	6 - 7	
	6 -15	4
140-18017-7	6 -14	2
140-18017-9	6 - 9	
	6 -17	4
140-18021	23 -74	4
140-18024-1	23 -	1
140-18025-12	23 -16	1
140-18025-6	23 -	1
140-18025-8	23 -	1
140-18026-3	23 - 2	1
140-18026-4	23 -	1
140-18026-5	23 -	1
140-18026-6	23 -	1
140-18046	23 -24	
	23 -	4
140-18047	23 -31	
	23 -	8
140-23005	29 -10	1
140-23034	29 -30	1
140-23034-10	29 -	1
140-23066	29 -37	1
140-23073	29 -38	1
140-23100	29 -	
	29 -	4
140-23311-200	29 -56	1
140-23408	29 -31	1
140-24011	30 - 3	1
140-24015	30 - 5	1
140-24026	30 - 7	1
140-24032	30 - 8	1
140-24034	30 - 9	1
140-24043	30 -19	1
140-24080-1	30 -28	1
140-24080-2	30 -	1
140-24081-2	30 -	1
140-24081-3	30 -31	1
140-24082	30 -	
	30 -	4
140-24083	30 -42	1
140-24085-1	30 -	1
140-24085-2	30 -	1
140-24086-3	30 -	1

PART NUMBER	FIGURE AND INDEX NUMBER	QUANTITY
140-24086-5	30 -	1
140-24086-7	30 -	1
140-24086-9	30 -	1
140-24089	30 -	2
140-24090-11	30 -	
	30 -	2
140-24090-13	30 -	1
140-24090-3	30 -	1
140-24090-5	30 -	1
140-24090-7	30 -	1
140-24090-9	30 -	1
140-24091	30 -	1
140-24092	30 -	1
140-24100	174 -11	REF
140-24100	30 -	1
140-24100-3	30 -49	1
140-24100-5	30 -	1
140-24100-7	30 -	1
140-24100-9	30 -50	1
140-24110	30 -48	1
140-24110-3	30 -	1
140-24110-5	30 -	1
140-24301	30 - 2	1
140-24301-11	30 -	1
140-24301-13	30 -	1
140-24301-15	30 -	1
140-24301-17	30 -	1
140-24301-18	30 -	1
140-24301-19	30 -	1
140-24301-21	30 -	1
140-24301-23	30 -	1
140-24301-25	30 -	1
140-24301-3	30 -	1
140-24301-5	30 -	1
140-24301-6	30 -	1
140-24301-7	30 -	1
140-24301-9	30 -	1
140-24302-3	30 - 4	1
140-24302-5	30 -10	1
140-24302-7	30 -20	1
140-24440-29	30 -	5
140-24440-801	30 -	1
140-24440-803	30 -39	1
140-24440-805	30 -	2
140-24501	30 -	1
140-24501-11	30 -	1
140-24501-12	30 -	1
140-24501-13	30 -	2
140-24501-14	30 -	1
140-24501-15	30 -	1
140-24501-16	30 -	1
140-24501-17	30 -68	1
140-24501-3	30 -70	1
140-24501-4	30 -	1
140-24501-5	30 -69	1
140-24501-6	30 -	1
140-24501-7	30 -67	1
140-24501-9	30 -	1
140-24504	30 -61	1
140-24513-1	174 -12	REF
140-24513-1	30 -47	1
140-24513-2	30 -	1
140-24514	30 -	1
140-24514-3	30 -55	1
140-24515	30 -62	1
140-31012-3	34 -51	6
140-31015-3	34 -39	1
140-31020	33 -22	2

PART NUMBER	FIGURE AND INDEX NUMBER	QUANTITY
140-31021-21	33 -27	1
140-31021-22	33 -	1
140-31021-23	33 -28	2
140-31023	33 -23	4
140-31024	62 -85	REF
	63 -68	
140-31024	32 - 7	4
140-31026	33 -38	2
140-31027-3	33 -43	
	33 -46	8
140-31027-5	33 -41	4
140-31029	52 -	4
140-31030	52 - 6	4
140-31033	52 -25	REF
140-31033	44 -46	
	52 - 3	4
140-31034	44 - 6	2
140-31035	44 -45	2
140-31038	54 -25	4
140-31039	54 -24	4
140-31040	54 -22	2
140-31041-1	54 - 9	2
140-31041-2	54 -10	2
140-31042	54 -	4
140-31042-3	54 -11	4
140-31043	54 -18	2
140-31044-5	54 -17	2
140-31045-3	44 -77	REF
	52 -27	
140-31045-3	54 -13	2
140-31045-4	52 -26	REF
140-31045-4	54 -12	2
140-31046	54 -23	2
140-31048	54 -21	4
140-31049	52 - 7	
	68 -12	5
140-31050	52 - 8	4
140-31057	34 -35	1
140-31058-3	34 -38	1
140-31058-4	34 -47	1
140-31062-1	73 -26	1
140-31062-2	73 -	1
140-31062-3	73 -	1
140-31062-4	73 -	1
140-31063-1	73 -25	1
140-31063-2	73 -	1
140-31068	33 -45	2
140-31070	75 -21	4
140-31182	44 -24	1
140-31187	77 -19	1
140-31188-1	51 -48	1
140-31188-2	51 -	1
140-31216-3	62 -61	1
140-31216-4	63 -11	1
140-31218-3	62 -63	1
140-31218-4	63 -17	1
140-31246	62 - 3	
	62 - 7	
	63 -	3
140-31269	38 -20	2
140-31269-11	38 -	2
140-31269-12	38 -	2
140-31269-9	38 -	2
140-31271	38 -	2
140-31312-11	74 -	
	74 -	4
140-31809-3	70 -28	4
140-31811-10	71 - 4	1

PART NUMBER	FIGURE AND INDEX NUMBER	QUANTITY
140-31811-9	71 - 3	1
140-31811-950	71 -	2
140-31822-20	68 - 4	
	69 - 4	
	69 -	3
140-31822-800	68 -	
	69 -17	2
140-31838	68 -10	
	69 - 9	2
140-31841	68 -47	REF
	69 -48	
140-31841	48 -19	1
140-31843	47 -67	1
140-31845-11	68 -	
	68 -	2
140-31845-21	68 -	
	68 -	
	69 -	3
140-31845-5	68 - 1	1
140-31845-7	68 -	
	69 - 1	2
140-31847	68 -43	
	69 -44	2
140-31848	38 -22	1
140-31848-10	38 -	1
140-31848-11	38 -	1
140-31848-5	38 -	1
140-31848-7	38 -	1
140-31848-9	38 -	1
140-33014-21	8 - 5	REF
140-33014-21	98 -	NP
140-33014-22	8 -	REF
140-33014-22	98 -	NP
140-33014-801	98 -	NP
140-33014-802	98 -	NP
140-33124-3	99 - 2	2
140-33124-4	99 - 3	2
140-33125-5	92 - 1	2
140-33125-9	92 -	2
140-33126	92 - 5	2
140-33127-800	92 -28	2
140-33128-3	92 -30	AR
140-33128-4	92 -	AR
140-33129-13	98 - 3	
	98 - 7	4
140-33129-3	98 -16	8
140-33129-5	98 -17	4
140-33129-7	98 -15	
	98 -	8
140-33129-9	98 -12	
	98 -	8
140-33141-1	99 - 9	1
140-33141-2	99 -	1
140-33141-801	99 -	1
140-33141-802	99 -	1
140-33142-1	99 -16	1
140-33142-2	99 -	1
140-33143-1	99 -10	1
140-33143-2	99 -	1
140-33143-801	99 -	1
140-33143-802	99 -	1
140-33145	92 -35	REF
140-33145	99 -12	2
140-33146	99 -	2
140-33149	92 -36	REF
140-33149	99 -	2
140-33149-3	99 -18	2
140-33149-4	99 -19	2

PART NUMBER	FIGURE AND INDEX NUMBER	QUANTITY
140-33150	99 -20	2
140-33151	92 -	2
140-33151-3	92 - 6	2
140-33152	92 -	2
140-33152-3	92 -10	2
140-33153	99 -17	2
140-33153-800	99 -	2
140-33154	99 -14	2
140-33155	99 -15	2
140-33301-10	96 -	1
140-33301-101	92 -	REF
140-33301-101	96 -	1
140-33301-102	92 -	REF
140-33301-102	96 -	1
140-33301-103	96 -17	1
140-33301-104	96 -	1
140-33301-107	96 - 6	1
140-33301-108	96 -	1
140-33301-11	96 -18	1
140-33301-113	96 - 3	1
140-33301-114	96 -	1
140-33301-12	96 -	1
140-33301-141	96 -	1
140-33301-142	96 -	1
140-33301-15	96 - 4	1
140-33301-151	96 -	1
140-33301-152	96 -	1
140-33301-16	96 -	1
140-33301-17	96 - 5	1
140-33301-18	96 -	1
140-33301-19	96 - 7	1
140-33301-20	96 -	1
140-33301-21	96 - 9	4
140-33301-23	96 - 8	1
140-33301-24	96 -	1
140-33301-25	96 -19	1
140-33301-26	96 -	1
140-33301-27	96 -20	1
140-33301-28	96 -	1
140-33301-5	96 - 1	1
140-33301-6	96 -	1
140-33301-9	96 - 2	1
140-33302	96 -	2
140-33302-3	96 -10	2
140-33302-4	96 -11	2
140-33303	96 -	2
140-33303-3	96 -13	2
140-33303-4	96 -14	2
140-33304	96 -16	2
140-33305-3	96 -	1
140-33305-4	96 -	1
140-33306	96 -	2
140-33307	96 -	2
140-33308	96 -	4
140-33308-3	96 -24	4
140-33309	96 -21	2
140-33310	96 -	2
140-33311	96 -27	4
140-33312	96 -26	AR
140-33351-1	14 -80	REF
140-33351-1	92 -	1
140-33351-13	92 -	2
140-33351-15	92 -	1
140-33351-16	92 -	1
140-33351-17	92 -	1
140-33351-18	92 -	1
140-33351-2	92 -	1
140-33351-3	92 -16	1

PART NUMBER	FIGURE AND INDEX NUMBER	QUANTITY
140-33351-4	92 -	1
140-33351-5	92 -17	1
140-33351-6	92 -	1
140-33351-7	92 -18	2
140-33353-1	92 -	1
140-33353-2	92 -	1
140-33353-3	92 -19	1
140-33353-4	92 -	1
140-33356-5	93 -17	2
140-33357-1	92 -21	1
140-33357-2	92 -	1
140-33358-1	92 -22	1
140-33358-2	92 -	1
140-33361	93 -16	4
140-33362	92 -25	4
140-33502	98 -	2
140-33503	11 -27	REF
140-33503	98 -22	2
140-33504	201 -55	REF
	232 -27	
140-33504	98 -	
	98 -24	
	98 -25	6
140-33510	98 -	2
140-33510-3	98 -39	2
140-33512-1	92 -	1
140-33512-2	92 -	1
140-33512-3	92 -31	1
140-33512-4	92 -	1
140-33512-5	92 -32	2
140-33513	92 -33	AR
140-33515	98 -	2
140-33532	97 - 1	2
140-33533	97 - 2	2
140-33535	97 -43	REF
140-33535	65 -15	2
140-33536	96 -31	REF
	97 -44	
140-33536	65 -17	2
140-33537	97 - 5	2
140-33538-1	97 - 7	1
140-33538-2	97 -	1
140-33539	97 -11	2
140-33540	97 -15	2
140-33543-1	66 -15	1
140-33543-2	66 -	1
140-33545-1	97 -42	REF
140-33545-1	66 -16	1
140-33545-2	66 -	1
140-33545-7	66 -17	2
140-33547-1	66 -	1
140-33547-2	66 -	1
140-33551	97 - 9	2
140-33553-5	97 -	
	97 -26	4
140-33553-7	97 -	
	97 -27	4
140-33554-3	235 - 8	2
140-33554-5	235 - 9	2
140-33555	235 -10	2
140-33602	100 -78	REF
140-33602	47 -72	1
140-33614	100 -77	REF
140-33614	47 -71	1
140-33619-1	97 - 8	1
140-33619-2	97 -	1
140-33620	100 -	2
140-33625-1	100 -	

PART NUMBER	FIGURE AND INDEX NUMBER	QUANTITY
140-33625-1	101 -12	2
140-33625-2	100 -52	
	101 - 4	2
140-33630	100 -	1
140-33633	101 -18	REF
140-33633	98 -	2
140-33633-3	98 -36	2
140-33633-851	98 -	2
140-33633-853	98 -	2
140-33633-855	98 -	2
140-33633-857	98 -	2
140-33633-859	98 -	2
140-33634	100 -56	
	101 -16	4
140-33635	100 -62	1
140-33636	100 -29	1
140-33646	47 -52	1
140-33652	100 -21	1
140-33653	90 -	1
140-34111-205	82 - 2	REF
140-34111-205	84 -	1
140-34111-405	84 -	1
140-34113-3	84 - 3	1
140-34113-4	84 - 7	1
140-34114	84 -14	1
140-34117	84 -18	1
140-34123	43 - 7	
	43 -27	2
140-34125	84 - 4	1
140-34126	84 - 8	1
140-34127-3	86 - 7	AR
140-34127-4	86 -	AR
140-34128	86 - 8	2
140-34146	85 -28	1
140-34147	85 -	1
140-34147-3	85 - 3	1
140-34149	85 -10	1
140-34150-3	85 -11	AR
140-34150-5	85 -	AR
140-34150-7	85 -	AR
140-34155	85 -31	2
140-34181	86 -	1
140-34183	86 - 2	1
140-34184	86 - 1	1
140-34301	81 - 4	REF
	90 -76	
140-34301	89 -	1
140-34301-11	89 -	1
140-34301-12	89 -12	1
140-34301-14	89 -10	1
140-34301-15	89 - 1	1
140-34301-16	89 -11	1
140-34301-22	89 -	1
140-34301-23	89 - 9	1
140-34301-3	89 - 6	1
140-34301-33	89 -	1
140-34301-4	89 - 7	1
140-34301-5	89 - 8	1
140-34301-850	89 -	1
140-34301-860	89 -	1
140-34301-950	89 -	1
140-34302-11	89 -	1
140-34302-13	188 -71	REF
	216 -14	
140-34302-13	89 -13	1
140-34302-5	89 -	1
140-34303	89 - 2	1
140-34303-800	89 -	1

PART NUMBER	FIGURE AND INDEX NUMBER	QUANTITY
140-34304	89 - 4	1
140-34305	89 - 5	1
140-34306	89 -	2
140-34307	89 -16	2
140-34309	89 -15	2
140-34310	89 -17	2
140-34311	89 -18	AR
140-34506	91 - 6	1
140-34507	91 - 9	1
140-34510-1	90 -	1
140-34510-3	90 -71	1
140-34515	42 -28	18
140-34522	43 -78	REF
	188 -67	
	215 -29	
140-34522	91 -25	1
140-34524	91 -26	1
140-34532	90 -	1
140-34533	90 - 9	1
140-34533-5	90 -	1
140-34534	90 -14	1
140-34534-6	90 -	1
140-34535	90 -13	1
140-34535-5	90 -	1
140-34538	90 -15	2
140-34539	90 - 7	2
140-34540	90 - 6	1
140-34541-3	90 -	1
140-34541-7	90 -61	1
140-34542	90 -55	1
140-34542-6	90 -	1
140-34545	188 -70	REF
	216 -13	
140-34545	90 -54	1
140-34545-6	90 -	1
140-34547	90 -	1
140-34548	90 -64	1
140-34551	90 -	1
140-34551-3	90 -45	1
140-34551-5	90 -	1
140-34551-7	90 -46	1
140-34552	90 -26	1
140-34552-6	90 -	1
140-34553	90 -27	1
140-34554	100 -67	REF
140-34554	90 -	1
140-34554-3	90 -50	1
140-34554-5	90 -	1
140-34554-7	90 -	1
140-34555	90 -31	1
140-34555-5	90 -	1
140-34556-11	90 -30	1
140-34557	90 -	1
140-34558	90 -	1
140-34562	90 -	1
140-34563	90 -37	1
140-34564	90 -39	1
140-34565	90 -41	1
140-34566	90 -	1
140-34567	90 -77	REF
140-34567	40 -30	1
140-34568	90 -21	1
140-34568-7	90 -	1
140-34569	90 -20	1
140-34570	90 -	1
140-34571	90 -16	1
140-34572	90 -	1
140-34573	90 -	1

PART NUMBER	FIGURE AND INDEX NUMBER	QUANTITY
140-34574	90 -38	1
140-34623-10	86 -18	1
140-34627	86 -10	1
140-34639	86 -	1
140-34640	86 -19	1
140-39036-1	79 -37	1
140-39036-2	79 -	1
140-39037-1	79 -42	1
140-39037-2	79 -	1
140-39038-1	238 -15	1
140-39038-2	238 -	1
140-39039-21	79 -	1
140-39039-22	79 -	1
140-39039-32	79 -	1
140-39046-5	207 -24	REF
140-39046-5	79 -32	1
140-39046-6	79 -	1
140-39046-8	79 -	1
140-39047-11	79 -33	1
140-39047-12	79 -	1
140-39048-11	79 -34	1
140-39048-12	79 -	1
140-39050-10	80 -	1
140-39050-11	80 -10	1
140-39050-111	80 - 4	1
140-39050-112	80 -	1
140-39050-12	80 -	1
140-39050-121	80 - 1	1
140-39050-122	80 -	1
140-39050-125	80 -	1
140-39050-126	80 -	1
140-39050-13	80 -11	1
140-39050-137	80 -17	1
140-39050-138	80 -	1
140-39050-139	80 -	1
140-39050-14	80 -	1
140-39050-140	80 -	1
140-39050-15	80 -12	1
140-39050-16	80 -	1
140-39050-17	80 -13	1
140-39050-18	80 -	1
140-39050-19	80 -14	1
140-39050-20	80 -	1
140-39050-29	80 -15	1
140-39050-30	80 -	1
140-39050-31	80 -16	1
140-39050-32	80 -	1
140-39050-5	80 -18	1
140-39050-6	80 -	1
140-39050-7	80 - 8	1
140-39050-8	80 -	1
140-39050-9	80 - 9	1
140-39051	80 - 2	2
140-39053-3	80 -19	1
140-39053-4	80 -	1
140-39055	80 - 5	2
140-39058-1	74 -42	1
140-39058-2	74 -	1
140-39058-801	74 -	1
140-39058-802	74 -	1
140-39059-17	74 -	2
140-39059-19	74 -	2
140-39059-29	74 -	2
140-39059-39	74 -	2
140-39059-5	74 -41	1
140-39059-6	74 -	1
140-39059-7	74 -	2
140-39059-801	74 -	1

PART NUMBER	FIGURE AND INDEX NUMBER	QUANTITY
140-39059-802	74 -	1
140-39059-803	74 -	1
140-39059-804	74 -	1
140-39059-805	74 -	1
140-39059-806	74 -	1
140-39059-9	74 -	2
140-39060-1	74 -57	1
140-39060-2	74 -	1
140-39061	74 -	1
140-39062-1	77 -59	1
140-39062-2	77 -	1
140-39063-1	77 -58	1
140-39063-2	77 -	1
140-39064-1	74 -43	1
140-39064-2	74 -	1
140-43040	113 - 2	
	114 - 2	2
140-43041	113 - 5	
	114 - 7	2
140-43043	115 - 2	
	116 - 2	2
140-43045	113 -11	2
140-43046-5	113 -	1
140-43046-7	113 -16	1
140-43047	113 -17	1
140-43049	113 -24	1
140-43050	113 -23	
	114 -22	2
140-43051	113 - 7	
	114 - 9	2
140-43052	113 - 6	
	114 - 8	4
140-47020	270 - 2	1
140-48019	12 -	2
140-48022-11	244 -50	REF
140-48022-11	245 -38	1
140-48042	244 -14	1
140-48054	250 - 6	1
140-48058	254 -16	2
140-48059-8	250 -24	1
140-48087	253 -	1
140-48092	14 -	1
140-48098-3	249 -42	
	250 - 5	4
140-48207	15 -	
	19 -	4
140-48804-5	244 -	
	253 -58	2
140-48804-7	244 -26	1
140-51028	146 - 6	1
140-52017	137 -13	2
140-52031	135 -29	4
140-52040	56 -	
	60 -	4
140-52102	127 -10	1
140-52107	127 - 5	1
140-52108	127 - 1	1
140-52202	130 -	1
140-52204	130 - 4	1
140-52209	131 -22	1
140-52239	130 -38	REF
140-52239	55 -41	1
140-52242-3	55 -27	1
140-52243	55 -38	1
140-52244	55 -40	1
140-52301	126 - 1	1
140-52302	126 - 4	1
140-52303	126 - 5	1

PART NUMBER	FIGURE AND INDEX NUMBER	QUANTITY
140-52304	126 - 2	1
140-52305	126 -	1
140-52307	126 -31	1
140-52308	126 -32	1
140-52309	126 -33	1
140-52313	126 -19	1
140-52315	126 -37	1
140-52316	126 - 9	1
140-52332	48 -11	1
140-52346	125 -	1
140-52383-5	126 -28	1
140-52402-3	136 -21	2
140-52403-15	136 -24	2
140-52407-3	136 - 1	1
140-52407-6	136 - 2	1
140-52408-1	136 -16	1
140-52408-2	136 -	1
140-52410	136 -58	2
140-52410-3	136 -	2
140-52414	136 -36	2
140-52415	136 -38	4
140-52416	136 -39	2
140-52418	136 -55	1
140-52420-1	136 -19	1
140-52420-2	136 -	1
140-52421	136 -42	2
140-52425	136 -41	2
140-52426	136 - 3	4
140-52432	136 - 5	2
140-52438-1	77 -54	1
140-52438-2	77 -	
	77 -	2
140-52442	51 -	1
140-52451	136 -	2
140-52459	136 -32	2
140-52463	136 - 7	2
140-53024-31	124 -	1
140-53024-32	124 -26	1
140-53029	124 - 7	2
140-53043-3	119 -12	2
140-53091-10	120 - 5	2
140-53094-802	124 - 4	2
140-53124	201 - 1	1
140-53316-11	278 -35	2
140-53316-15	278 -34	1
140-53316-21	278 -12	
	278 -15	
	281 -	4
140-53316-23	280 - 9	1
140-53316-3	278 - 8	
	278 -32	
	278 -37	
	278 -39	
	279 -	
	279 -	9
140-53316-5	272 -57	1
140-53316-7	272 -37	
	272 -50	
	280 - 3	
	280 -	4
140-53316-9	272 -39	
	272 -54	2
140-53316-950	280 -	
	280 -	2
140-53323	273 -	1
140-53323-10	273 -	1
140-53325	273 -12	1
140-53355	275 -	1

PART NUMBER	FIGURE AND INDEX NUMBER	QUANTITY
140-53360	53 -	1
140-53364	273 - 1	1
140-53364-11	273 - 5	2
140-53364-3	273 - 2	1
140-53364-5	273 - 3	1
140-53364-7	273 - 4	1
140-53364-9	273 -	2
140-53373	275 -17	1
140-53374	36 -	1
140-53386	37 -	1
140-53387	275 -22	1
140-53388	275 -23	1
140-53389	275 -20	4
140-53390	275 -18	1
140-53399	275 -16	1
140-54008	37 -56	
	152 -	
	161 -37	3
140-54008-3	37 -	
	152 -29	
	161 -	3
140-54010	71 -71	1
140-54011	166 -10	1
140-54027	168 -12	
	169 -11	4
140-54035	160 -18	1
140-54035-3	160 -	1
140-54035-4	160 -	1
140-54035-5	160 -	1
140-54035-800	160 -	1
140-54037	39 -28	1
140-54039-3	153 -18	1
140-54040-3	153 -26	1
140-54041	67 -	1
140-54046	77 -18	1
140-54047	76 -	
	77 - 7	4
140-54047-5	60 -34	1
140-54048	77 - 8	1
140-54083	153 - 6	2
140-54088-11	35 -19	1
140-54088-5	35 -	1
140-54088-7	35 -	1
140-54089	35 -12	1
140-54089-3	35 -	1
140-54089-5	35 -	1
140-54104	93 -13	2
140-54107	155 -	1
140-54108-3	157 -	
	158 -	2
140-54110	170 -35	16
140-54110-10	170 -	16
140-54111	170 -	16
140-54112	170 -	16
140-54113	170 -	16
140-54114	170 -	16
140-54117-3	157 -	
	158 -	4
140-54117-801	157 -14	
	158 -20	4
140-54128-11	180 -18	1
140-54128-21	180 -20	1
140-54128-3	180 -16	1
140-54135	172 - 1	1
140-54141	167 - 2	2
140-54147-100	160 -19	2
140-54152-10	93 -20	1
140-54160	53 -	2

PART NUMBER	FIGURE AND INDEX NUMBER	QUANTITY
140-54168	40 -23	2
140-54194	154 - 3	1
140-54194-3	154 -30	1
140-54222	157 -	1
140-58016-3	214 - 4	1
140-58041-10	235 - 1	2
140-58045	216 - 1	1
140-58173	233 - 7	2
140-58214	308 -13	1
140-58228	219 -10	2
140-58230	219 -13	2
140-58235	219 -12	2
140-58260	219 -23	1
140-58261	219 -17	1
140-58262	219 -20	2
140-58263	219 -19	1
140-58345	201 -16	2
140-58373-1	93 -19	1
140-58373-2	93 -	1
140-58393	201 -49	2
140-58442	42A- 5	
	46 -	3
140-58450	219 -22	1
140-58460	216 - 2	1
140-58460-3	216 -	1
140-58460-4	216 -	1
140-58461-1	43 -55	1
140-58461-2	43 -	1
140-58508	201 -18	2
140-58509	201 -17	2
140-58519-1	201 -	1
140-58519-2	201 -	1
140-58560	215 - 7	
	215 -16	2
140-61021	51 -	6
140-61022	51 -	2
140-61023	51 -	2
140-61024	51 -	2
140-61025-3	51 -	2
140-61025-5	51 -	2
140-61025-7	51 -	2
140-61025-801	51 -	2
140-61025-803	51 -	2
140-61025-805	51 -	2
140-61026	297 -	6
140-61026-3	297 -29	6
140-61026-5	297 -28	6
140-61028	297 -	6
140-61028-3	297 -31	6
140-61028-5	297 -30	6
140-61029-1	298 -30	1
140-61029-2	298 -	1
140-61031	1 -10	REF
140-61031	297 -	NP
140-61040-1	298 -25	1
140-61040-2	298 -	1
140-61041-1	298 -26	1
140-61041-2	298 -	1
140-61042-1	298 -27	1
140-61042-2	298 -	1
140-61044	298 -	
	298 -	8
140-61061-3	298 -	2
140-61065-1	297 -22	3
140-61065-2	297 -	3
140-61065-29	297 -27	6
140-61081-1	44 -62	1
140-61081-2	44 -	1

PART NUMBER	FIGURE AND INDEX NUMBER	QUANTITY
140-61083-31	298 - 4	1
140-61083-32	298 -	1
140-61085	44 -61	8
140-61086	44 -63	2
140-61087	44 -64	2
140-61088	297 -49	REF
140-61088	51 -19	2
140-61088-801	51 -	2
140-61089	51 -20	2
140-61089-801	51 -	2
140-61090	51 -21	2
140-61090-801	51 -	2
140-61091	297 -21	2
140-61092	54 -31	
	175 -	4
140-61101-1	297 -32	2
140-61101-2	297 -	2
140-61101-951	297 -33	4
140-61102-5	297 -34	4
140-61102-7	297 -	4
140-61103	297 -44	4
140-61105-1	297 -38	2
140-61105-2	297 -	2
140-61115	297 -43	4
140-61116	297 -42	4
140-61117	297 -39	4
140-61117-3	297 -	4
140-61122	36 -41	1
140-61123	36 -40	1
140-61155	300 -10	6
140-61173	300 - 5	2
140-61177	300 - 9	6
140-63005-11	311 - 1	1
140-63005-12	311 -	1
140-63009	311 - 4	2
140-63010	311 - 5	
	311 -	6
140-63010-950	311 -	2
140-63011	311 -28	4
140-63012	307 -	1
140-63020	307 -	1
140-68015	309 -21	8
140-68016	309 -22	8
140-68017	309 -24	40
140-68018-800	309 -57	8
140-68023	309 -55	8
140-68024	309 -	8
140-68032-1	310 -14	8
140-68032-2	310 -	8
140-68033	310 - 6	32
140-68034-801	310 -16	16
140-68034-951	310 -	16
140-68034-953	310 -	32
140-68039	309 -20	8
140-68040	309 -34	8
140-68042	309 -13	8
140-68043	309 -31	8
140-68045	309 -37	8
140-68046	309 -29	8
140-68047	309 -28	8
140-68049	309 -27	8
140-68050	309 -49	8
140-68051	309 -30	8
140-68052	309 -54	8
140-68053	309 -33	8
140-71043	289 -	1
140-71052-15	155 -	1
140-71059-3	290 - 9	8

PART NUMBER	FIGURE AND INDEX NUMBER	QUANTITY
140-71059-5	290 -	8
140-73060-800	307 -	1
140-73060-802	307 - 3	1
140-73060-804	307 - 4	1
140-73060-806	307 -	1
140-73060-808	307 -10	2
140-73060-810	307 - 5	1
140-73060-812	307 - 6	1
140-73060-814	307 - 7	1
140-73060-816	307 - 8	1
140-73308	40 -	1
140B0100	299 -10	1
141-43023	115 -38	
	116 -43	2
141-58396	189 -26	1
142-33139	43 - 6	
	43 -26	2
142-52434	224 - 5	
	240 - 5	2
142-58306	289 -29	3
142-68019	38 -34	1
143-5	201 -48	2
144-54071	155 -	
	155 -12	
	292 -	
	292 -	
	292 -	
	293 - 3	
	293 -33	14
144-54071-10	155 -	
	292 -	
	292 -	
	292 -	
	292 -	6
144-71097-950	288 -11	1
144-71098-950	288 -12	1
145-25-16	269 -	1
1452-070	56 -	4
146-42617	283 - 6	1
146-43034	182 -32	2
146-54144	164 -22	
	164 -	
	165 - 9	
	165 -	4
146-54144-5	164 -23	
	165 -10	2
146-54145	164 -	
	164 -	
	165 -17	
	165 -	6
146-54146	164 -	
	164 -	
	165 -18	
	165 -	4
146-54146-3	164 -	
	165 -19	2
1461FX-35-01	140 -	
146383	307 -25	2
147-42125	110 - 3	4
147-43069	123 -29	1
147062MCR	93 -22	2
147063	93 -21	2
147912	82 -	
149-61078	300 - 8	6
15-1600	265 -	
15C1-7	121 -27	1
150-S1-12D	104 -	
	105 -	

PART NUMBER	FIGURE AND INDEX NUMBER	QUANTITY
150-S1-12D	105 -	3
150-S1-6	208 -	
	208 -35	
	209 -20	
	209 -28	4
150-S1-6D	104 -	
	104 -	
	105 -	
	105 -	4
150-S1-8	207 -	
	207 -	2
150-S1-8D	104 -	
	104 -	
	105 -	
	105 -	4
150-51-12D	104 -	1
151-00024	1 -	NP
151-10006-21	5 - 5	1
151-10006-22	5 - 6	1
151-10006-31	5 -52	1
151-10006-32	5 -	1
151-10007	5 -	1
151-10007-3	5 -38	1
151-10007-5	5 -	1
151-10007-7	5 -40	1
151-10007-9	5 -41	2
151-10017	5 -	1
151-10017-3	5 -37	1
151-10017-5	5 -39	1
151-10017-7	5 -	1
151-13005-13	3 -41	1
151-13005-14	3 -34	1
151-13005-17	3 -	
	3 -	2
151-13005-19	3 -	5
151-13005-21	3 -	1
151-13005-23	3 -36	2
151-13005-25	3 -37	1
151-13005-27	3 -40	1
151-13005-29	3 -30	1
151-13005-5	3 -32	1
151-13005-7	3 -31	1
151-13005-9	3 -38	4
151-13009-13	4 -17	1
151-13009-14	4 -19	1
151-13009-15	4 -16	1
151-13009-16	4 -18	1
151-13009-17	4 -26	1
151-13009-18	4 -	1
151-13009-201	4 -	1
151-13009-25	4 -24	1
151-13009-41	4 -23	1
151-13009-42	4 -22	1
151-13009-43	4 -21	1
151-13009-44	4 -20	1
151-13009-5	4 -	5
151-13009-54	4 -29	1
151-13009-55	4 -28	1
151-13009-56	4 -	1
151-13009-57	4 -	1
151-13009-6	4 -14	1
151-13009-61	4 -	1
151-13009-62	4 -	1
151-13009-65	4 -	1
151-13009-66	4 -25	1
151-13009-67	4 -	1
151-13009-69	4 -15	1
151-13009-70	4 -	1

PART NUMBER	FIGURE AND INDEX NUMBER	QUANTITY
151-13009-71	4 -	1
151-13009-72	4 -	1
151-13009-73	4 -13	1
151-13009-9	4 -	1
151-13017	244 -47	REF
151-13017	245 -41	2
151-13020	3 -50	1
151-13021	3 -49	1
151-13022	3 -52	1
151-13023	3 -51	1
151-13038-21	3 -42	1
151-13038-5	3 -	1
151-13038-7	3 -	1
151-13038-9	3 -	1
151-13039-1	2 - 5	1
151-13039-2	2 -	1
151-13040-7	4 -11	1
151-13040-9	4 - 7	1
151-13041-3	4 -	2
151-13042-3	4 -	1
151-13042-5	4 -27	1
151-13043	3 -44	1
151-13044	245 -44	REF
151-13044	244 - 3	1
151-13045	244 - 2	1
151-13046	244 -	1
151-13116-101	4 -	1
151-13116-13	4 -	1
151-13116-15	4 - 6	1
151-13116-17	4 - 4	1
151-13116-19	4 - 8	1
151-13116-23	4 - 9	1
151-13116-25	4 - 3	1
151-13116-27	4 -	
	4 -10	2
151-13116-29	4 -	2
151-13116-3	4 - 1	1
151-13116-33	4 -12	1
151-13116-7	4 -	7
151-13116-9	4 - 2	1
151-14007-11	9 -	NP
151-14007-12	9 -	NP
151-14013-1	247 -	NP
151-14013-2	247 -	NP
151-14013-801	247 -	NP
151-14013-802	247 -	NP
151-14013-953	247 -15	1
151-14013-954	247 -	1
151-14029	6 -30	24
151-14029-21	6 -34	2
151-14033-3	15 -	
	15 -	5
151-14033-4	15 -	1
151-14037-101	11 - 1	1
151-14037-102	11 -	1
151-14037-103	11 -	1
151-14037-104	11 -	1
151-14037-801	11 -	1
151-14037-802	11 -	1
151-14037-950	11 -	1
151-14037-951	11 -	1
151-14037-953	11 -	1
151-14037-954	11 -	1
151-14038-103	11 -	1
151-14038-104	11 -	1
151-14038-201	11 - 2	1
151-14038-202	11 -	1
151-14047-3	2 -27	REF

PART NUMBER	FIGURE AND INDEX NUMBER	QUANTITY
151-14047-3	9 -46	
151-14047-3	10 - 5	1
151-14047-4	10 -	1
151-14060-1	11 -	1
151-14060-2	11 -	1
151-14060-3	11 -	1
151-14060-4	11 -	1
151-14060-5	11 -	1
151-14060-6	11 -	1
151-14065-35	14 -	1
151-14065-36	14 -	1
151-14065-37	14 -	1
151-14065-38	14 -	1
151-14065-39	14 -	1
151-14065-40	14 -	1
151-14065-41	14 -	1
151-14065-42	14 -	1
151-14065-51	14 -14	1
151-14065-52	14 -	1
151-14067-1	14 - 7	1
151-14067-2	14 -	1
151-14074-11	14 -64	1
151-14074-12	14 -	1
151-14074-13	14 -	1
151-14074-14	14 -	1
151-14074-5	14 -	1
151-14074-6	14 -	1
151-14074-951	14 -	AR
151-14074-952	14 -	AR
151-14085-1	2 -23	1
151-14085-2	2 -	1
151-14091-1	14 - 6	1
151-14091-2	14 -	1
151-14093-3	10 -28	2
151-14093-5	10 -11	2
151-14093-7	10 -14	1
151-14093-8	10 -	1
151-14093-9	10 -20	2
151-14099-1	11 -15	1
151-14099-2	11 -	1
151-14152	14 -73	2
151-14153-1	7 -	1
151-14153-2	7 -	1
151-14153-3	7 - 3	1
151-14153-4	7 -	1
151-14153-5	7 -	1
151-14153-6	7 -	1
151-14169	10 -	2
151-14182	11 -18	2
151-14186	14 -	4
151-14220	248 -45	8
151-14225-1	12 -12	1
151-14225-2	12 -	1
151-14226-1	12 -13	1
151-14226-2	12 -	1
151-14234-1	12 -14	1
151-14234-2	12 -	1
151-14235	12 -	1
151-14237-5	15 -	
	19A-	4
151-14239-1	19 - 9	2
151-14239-11	19 -16	1
151-14239-12	19 -	1
151-14239-7	19 -	1
151-14239-8	19 -	1
151-14240-1	15 -	2
151-14240-11	15 -	
	19 -	4

PART NUMBER	FIGURE AND INDEX NUMBER	QUANTITY
151-14240-13	19 -	2
151-14240-3	15 -	
	19 -	4
151-14240-5	15 -	
	19A-	4
151-14240-7	15 -	
	19A-	4
151-14240-9	15 -	
	19A-	4
151-14242	21 - 9	2
151-14249-1	11 -12	1
151-14249-2	11 -	1
151-14256-1	14 -	2
151-14256-11	14 -	2
151-14256-31	14 -71	2
151-14273-1	7 -	1
151-14273-2	7 -	1
151-14273-3	7 -22	1
151-14273-4	7 -	1
151-14273-5	7 -23	2
151-14273-7	7 -24	2
151-14273-801	7 -	1
151-14273-802	7 -	1
151-14273-951	7 -	2
151-14292-1	10 -13	
	10 -16	
	10 -22	3
151-14292-2	10 -	
	10 -	
	10 -	3
151-14292-5	10 -29	1
151-14292-6	10 -	1
151-14292-951	10 -	1
151-14292-952	10 -	1
151-14292-955	10 -	1
151-14292-956	10 -	1
151-14293-11	10 -23	1
151-14293-12	10 -	1
151-14293-801	10 -	1
151-14293-802	10 -	1
151-14296-11	10 -	1
151-14296-12	10 -	1
151-14296-5	10 - 9	1
151-14296-6	10 -	1
151-14326	10 -	2
151-14326-800	10 -	2
151-14452-11	9 - 7	1
151-14452-12	9 -	1
151-14536-3	19 -	2
151-14536-5	19 -	2
151-14536-7	19 -	2
151-14545-5	15 -	
	19 -25	2
151-14545-6	15 -	
	19 -	2
151-14546-5	15 -45	
	19A-27	2
151-14546-6	15 -	
	19A-	2
151-14547-5	15 -	
	19A-30	2
151-14547-6	15 -	
	19A-	2
151-14548-10	15 -	1
151-14548-7	15 -46	1
151-14548-8	15 -	1
151-14548-9	15 -47	1
151-14549-11	15 -	1

PART NUMBER	FIGURE AND INDEX NUMBER	QUANTITY
151-14549-12	15 -	1
151-14549-13	15 -	1
151-14549-14	15 -	1
151-14551-1	9 -23	1
151-14551-2	9 -	1
151-14559-1	9 -24	1
151-14559-2	9 -	1
151-14576-1	310 -17	REF
151-14576-1	14 -	1
151-14576-2	14 -	1
151-14576-3	14 -35	1
151-14576-4	14 -	1
151-14577-1	310 -18	REF
151-14577-1	14 -	1
151-14577-2	14 -	1
151-14577-3	14 -38	1
151-14577-4	14 -	1
151-14578-1	310 -20	REF
151-14578-1	14 -	1
151-14578-2	14 -	1
151-14578-3	14 -60	1
151-14578-4	14 -	1
151-14579-1	310 -21	REF
151-14579-1	9 -29	1
151-14579-2	9 -	1
151-14600-11	13 -30	REF
151-14600-11	12 -26	1
151-14600-12	12 -	1
151-14600-13	12 -	2
151-14600-301	12 -	1
151-14600-302	12 -	1
151-14600-801	12 -	1
151-14600-802	12 -	1
151-14600-803	12 -	1
151-14600-804	12 -	1
151-14600-805	12 -	1
151-14600-806	12 -	1
151-14603-13	13 -18	
	13 -	1
151-14603-14	13 -	
	13 -	1
151-14603-301	13 -	1
151-14603-302	13 -	1
151-14603-801	13 -	1
151-14603-802	13 -	1
151-14603-803	13 -	1
151-14603-804	13 -	1
151-14603-805	13 -	1
151-14603-806	13 -	1
151-14603-953	13 -	1
151-14603-954	13 -	1
151-14633-1	6 -49	REF
151-14633-1	14 -30	1
151-14633-11	6 -48	REF
151-14633-11	14 -29	1
151-14633-12	14 -	1
151-14633-2	14 -	1
151-14634-1	14 -27	1
151-14634-2	14 -	1
151-14635-1	14 -26	1
151-14635-2	14 -	1
151-14661-1	9 - 8	1
151-14661-2	9 -	1
151-14675-1	6 -50	REF
151-14675-1	14 -58	1
151-14675-2	14 -	1
151-14676-1	6 -51	REF
151-14676-1	14 -59	1

PART NUMBER	FIGURE AND INDEX NUMBER	QUANTITY
151-14676-2	14 -	1
151-17207-3	18 - 1	28
151-17207-5	18 - 2	4
151-18011-11	23 -80	REF
151-18011-11	6 -16	2
151-18030	23 -77	4
151-18031	23 -68	4
151-18032-1	23 -	1
151-18032-2	23 -	1
151-18032-3	23 -21	1
151-18032-4	23 -	1
151-18034-1	23 -	1
151-18034-2	23 -	1
151-18034-3	23 -25	1
151-18034-4	23 -	1
151-18035-1	23 -	
	23 -26	2
151-18035-2	23 -	
	23 -	2
151-18036-1	23 -	
	23 -27	
	23 -	
	23 -	4
151-18036-2	23 -	
	23 -	
	23 -	
	23 -	4
151-18041	23 -28	
	23 -56	8
151-18042-3	23 -	
	23 -	12
151-18042-5	23 -	
	23 -	12
151-18045-1	99 - 4	1
151-18045-2	99 -	1
151-18076-1	23 -	1
151-18076-2	23 -	1
151-18076-3	23 -54	1
151-18076-4	23 -	1
151-18077-1	23 -	1
151-18077-2	23 -	1
151-18077-3	23 -55	1
151-18077-4	23 -	1
151-18078-1	23 -	
	23 -	2
151-18078-2	23 -	
	23 -	2
151-18128-11	23 -79	REF
151-18128-11	6 - 8	2
151-18132-1	23 -	1
151-18132-2	23 -	1
151-18132-3	23 -34	1
151-18132-4	23 -	1
151-18134-1	23 -	1
151-18134-2	23 -	1
151-18134-3	23 -35	1
151-18134-4	23 -	1
151-18135-3	23 -	
	23 -	2
151-18135-4	23 -	
	23 -	2
151-18135-5	23 -	
	23 -	2
151-18135-6	23 -	
	23 -	2
151-18135-7	23 -	1
151-18135-8	23 -	1
151-18136-3	23 -	2
151-18136-4	23 -	
	23 -	2
151-18136-5	23 -	
	23 -	2
151-18136-6	23 -	
	23 -	2
151-18136-7	23 -	1
151-18136-8	23 -	1
151-18137-1	23 -	
	23 -	
	23 -	3
151-18137-2	23 -	
	23 -	
	23 -	3
151-18137-3	23 -	
	23 -	2
151-18137-4	23 -	
	23 -	2
151-18150-1	23 -	1
151-18150-3	23 -48	2
151-18150-4	23 -49	2
151-18175-1	23 -	1
151-18175-2	23 -	1
151-18175-3	23 -59	1
151-18175-4	23 -	1
151-18177-1	23 -	1
151-18177-2	23 -	1
151-18177-3	23 -60	1
151-18177-4	23 -	1
151-21007-1	27 -16	1
151-21007-2	27 -	1
151-21008-1	27 - 4	1
151-21008-2	27 -	1
151-21012-1	27 -19	1
151-21012-2	27 -	1
151-21013	27 - 5	2
151-21013-3	27 -	1
151-21024	27 -	2
151-21025	27 - 6	2
151-21036	27 -20	2
151-21038	27 - 7	2
151-21046	27 -	2
151-21047	27 - 8	2
151-21058	27 - 9	2
151-21104-1	27 -49	1
151-21104-2	27 -	1
151-21108-21	27 -	
	27 -	8
151-21110-1	27 -50	1
151-21110-2	27 -	1
151-21111-13	27 -	4
151-21111-17	27 -	4
151-21111-7	27 -	
	27 -	8
151-21113-1	27 -58	1
151-21113-2	27 -	1
151-21114-3	27 -48	1
151-21114-4	27 -	1
151-21114-5	27 -47	1
151-21114-6	27 -	1
151-21115	27 -45	2
151-21116-1	27 -	1
151-21116-2	27 -	1
151-21117-1	27 - 2	1
151-21117-2	27 -	1
151-21118-1	27 -	1
151-21118-2	27 -	1

PART NUMBER	FIGURE AND INDEX NUMBER	QUANTITY
151-21119-1	27 - 3	1
151-21119-2	27 -	1
151-21122-1	27 -15	1
151-21122-2	27 -	1
151-21123-1	27 -	1
151-21123-2	27 -	1
151-21132-1	27 -57	1
151-21132-2	27 -	1
151-21133	27 -12	2
151-21301-1	27 - 1	1
151-21301-2	27 -	1
151-21412-1	27 -34	1
151-21412-2	27 -	1
151-21414-1	27 -29	1
151-21414-2	27 -	1
151-23002-10	29 -	1
151-23002-11	29 -42	1
151-23002-12	29 -	1
151-23002-13	29 -43	1
151-23002-14	29 -	1
151-23002-15	29 -44	1
151-23002-16	29 -	1
151-23002-17	29 -45	1
151-23002-18	29 -	1
151-23002-19	29 -47	1
151-23002-20	29 -	1
151-23002-29	29 -53	1
151-23002-31	29 -54	1
151-23002-32	29 -	1
151-23002-7	29 -55	1
151-23002-8	29 -	1
151-23002-801	29 -	1
151-23002-803	29 -	1
151-23002-805	29 -	1
151-23002-9	29 -41	1
151-23006	29 -15	1
151-23007	29 -14	1
151-23012	29 -	1
151-23013	29 -16	1
151-23033	29 -28	1
151-23035-10	29 -27	1
151-23036	29 -29	1
151-23036-801	29 -	1
151-23040-101	29 -13	1
151-23045-10	29 -32	1
151-23046	29 -33	1
151-23059	29 -35	1
151-23060	29 -34	1
151-23061	29 -36	1
151-23074	29 -39	1
151-23074-800	29 -	
151-23090	29 -57	1
151-23100-1	29 -46	1
151-23100-2	29 -	1
151-23101-1	29 -49	1
151-23101-2	29 -	1
151-23102-1	29 -50	1
151-23102-2	29 -	1
151-23103-1	29 -51	1
151-23103-2	29 -	1
151-23104-1	29 -	1
151-23104-2	29 -	1
151-23105	29 -	1
151-23106-1	29 -52	1
151-23106-2	29 -	1
151-23107	29 -	2
151-23108	29 -	2
151-23109	29 -48	2

PART NUMBER	FIGURE AND INDEX NUMBER	QUANTITY
151-23115-3	29 -	1
151-23115-4	29 -	1
151-23116-951	29 -	1
151-23116-952	29 -	1
151-23119	29 -	2
151-23301-53	29 - 3	1
151-23302-15	29 -	2
151-23302-801	29 - 5	1
151-23302-951	29 -	1
151-23302-952	29 -	1
151-23318-1	29 -58	1
151-23318-2	29 -	1
151-23402-3	26 -30	REF
151-23402-3	29 - 4	1
151-23404-3	26 -31	REF
151-23404-3	29 - 6	1
151-24001	26 - 5	REF
151-24001	30 -	1
151-24001-3	30 -71	1
151-24002	30 -	1
151-24002-13	30 -12	1
151-24002-14	30 -	1
151-24002-17	30 -	1
151-24002-19	30 -	1
151-24002-23	30 -11	1
151-24002-25	30 -41	1
151-24002-27	30 -	1
151-24002-29	30 -30	1
151-24002-3	30 -45	1
151-24002-30	30 -	1
151-24002-31	30 -	
	30 -	2
151-24002-33	30 -14	1
151-24002-4	30 -	1
151-24002-5	30 -44	1
151-24002-7	30 -43	1
151-24002-950	30 -29	2
151-24040	30 -16	1
151-24041	30 -15	1
151-24047	30 -18	1
151-24048	30 -17	1
151-24056	30 -22	1
151-24057	30 -21	1
151-24058	30 -23	1
151-24065	30 -25	1
151-24066	30 -24	1
151-24075	30 -26	1
151-24120-3	30 -27	1
151-24120-5	30 - 6	1
151-24121	30 -	1
151-24122	30 -36	1
151-24123	30 -35	1
151-24125	30 -	1
151-24311	30 -72	1
151-24402	26A-42	REF
151-24402	30 -	1
151-24402-3	30 -32	1
151-24402-5	30 -33	1
151-24506	30 -65	1
151-24507	30 -66	1
151-24508	30 -	1
151-24509	30 -	1
151-25019	31 -	1
151-31006-10	33 -	1
151-31006-11	33 -15	1
151-31006-12	33 -	1
151-31006-13	33 - 4	1
151-31006-14	33 -	1

PART NUMBER	FIGURE AND INDEX NUMBER	QUANTITY
151-31006-15	33 - 5	1
151-31006-16	33 -	1
151-31006-18	33 -	2
151-31006-19	33 -34	4
151-31006-21	33 - 6	1
151-31006-22	33 -	1
151-31006-23	33 -	2
151-31006-24	33 -	2
151-31006-27	33 -	2
151-31006-28	33 -	2
151-31006-29	33 - 8	1
151-31006-3	33 - 1	1
151-31006-30	33 -	1
151-31006-31	33 - 9	1
151-31006-32	33 -	1
151-31006-33	33 -10	1
151-31006-34	33 -	1
151-31006-35	33 -11	1
151-31006-36	33 -	1
151-31006-37	33 -12	1
151-31006-38	33 -	1
151-31006-39	33 -13	1
151-31006-4	33 -	1
151-31006-40	33 -	1
151-31006-41	33 -14	1
151-31006-42	33 -	1
151-31006-43	33 -16	1
151-31006-44	33 -	1
151-31006-49	33 - 3	1
151-31006-50	33 -	1
151-31006-53	33 -	2
151-31006-55	33 -	2
151-31006-57	33 -	2
151-31006-71	33 -39	2
151-31006-75	33 -	2
151-31006-77	33 - 2	1
151-31006-78	33 -	1
151-31006-801	32 - 4	REF
151-31006-801	33 -	1
151-31006-802	32 -	REF
151-31006-802	33 -	1
151-31006-803	33 -	1
151-31006-804	33 -	1
151-31006-81	33 -18	2
151-31006-83	33 -	2
151-31006-85	33 -19	2
151-31006-87	33 -21	2
151-31006-89	33 -20	2
151-31006-9	33 - 7	1
151-31006-91	33 -	2
151-31006-93	33 -	2
151-31007-10	54 -	1
151-31007-101	54 -	1
151-31007-102	54 -	1
151-31007-11	54 - 3	1
151-31007-12	54 -	1
151-31007-13	54 - 7	1
151-31007-14	54 -	1
151-31007-17	54 - 8	1
151-31007-18	54 -	1
151-31007-3	54 - 2	1
151-31007-301	54 - 1	1
151-31007-302	54 -	1
151-31007-351	54 -	1
151-31007-352	54 -	1
151-31007-4	54 -	1
151-31007-5	54 - 6	1
151-31007-6	54 -	1

PART NUMBER	FIGURE AND INDEX NUMBER	QUANTITY
151-31007-61	54 -	4
151-31007-63	54 -	2
151-31007-65	54 -35	2
151-31007-67	54 -33	1
151-31007-68	54 -	1
151-31007-69	54 -34	2
151-31007-7	54 - 5	1
151-31007-71	54 -32	2
151-31007-73	54 -	2
151-31007-75	54 -36	2
151-31007-8	54 -	1
151-31007-803	54 -	1
151-31007-804	54 -	1
151-31007-805	54 -	1
151-31007-806	54 -	1
151-31007-807	54 -	
151-31007-808	54 -	
151-31007-9	54 - 4	1
151-31007-91	54 -30	2
151-31007-93	54 -29	2
151-31007-957	54 -	1
151-31007-958	54 -	1
151-31007-959	54 -	1
151-31007-960	54 -	1
151-31007-961	54 -	1
151-31007-962	54 -	1
151-31007-963	54 -	1
151-31007-964	54 -	1
151-31009	32 -14	1
151-31009-21	32 -	1
151-31009-27	32 -	1
151-31009-3	32 -	1
151-31009-5	32 -	1
151-31010-25	32 -19	1
151-31012	35 -	1
151-31012-11	35 -45	1
151-31012-13	35 -46	1
151-31012-3	35 -42	1
151-31012-5	35 -41	1
151-31012-7	35 -43	1
151-31012-9	35 -44	1
151-31014	40 -37	2
151-31014-951	40 -	2
151-31016	52 -	1
151-31016-5	52 -15	1
151-31016-803	52 -	1
151-31017	32 -15	1
151-31017-19	32 -	1
151-31017-3	32 -	1
151-31017-5	32 -	1
151-31018	52 -	1
151-31018-6	52 -23	1
151-31020	32 - 5	REF
151-31020	35 -	NP
151-31021	40 -36	1
151-31021-3	40 -	1
151-31025-1	32 -21	1
151-31026-1	52 - 9	1
151-31026-2	52 -17	1
151-31027-11	52 -10	1
151-31027-801	52 -	1
151-31027-803	52 -	1
151-31028-11	52 -18	1
151-31028-801	52 -	1
151-31028-803	52 -	1
151-31028-805	52 -	1
151-31060-1	56 -56	1
151-31060-2	56 -	1

PART NUMBER	FIGURE AND INDEX NUMBER	QUANTITY
151-31061-1	56 -	NP
151-31061-2	56 -	NP
151-31103-10	48 -	1
151-31103-17	48 -39	1
151-31103-19	48 -40	1
151-31103-21	48 - 7	1
151-31103-23	48 - 8	1
151-31103-25	48 - 1	1
151-31103-7	48 -18	1
151-31103-81	49 -24	REF
151-31103-81	48 -	1
151-31103-9	48 -13	1
151-31106-11	46 -	1
151-31106-12	46 -	1
151-31106-15	46 -	1
151-31106-17	46 -16	1
151-31106-21	46 -	1
151-31106-3	46 - 1	1
151-31106-5	46 - 2	1
151-31106-6	46 - 3	1
151-31106-7	46 -	1
151-31106-81	45 - 2	REF
	91 -	
151-31106-81	46 -	1
151-31106-9	46 -10	1
151-31108-1	51 -59	REF
151-31108-1	39 -24	1
151-31108-2	39 -	1
151-31109-41	50 - 4	1
151-31109-43	50 - 7	1
151-31109-45	50 - 8	1
151-31109-46	50 -	1
151-31109-55	50 -	1
151-31109-59	50 -	1
151-31109-63	50 - 3	1
151-31109-65	50 - 5	1
151-31109-70	45 - 4	REF
151-31109-70	50 -	1
151-31110	50 - 9	1
151-31111-17	40 -	1
151-31111-26	40 -	1
151-31111-40	40 -	1
151-31111-49	40 -	1
151-31111-52	40 -	1
151-31111-71	40 -10	1
151-31113	42 - 4	1
151-31114-101	39 -10	1
151-31114-202	39 -	1
151-31114-41	39 -	1
151-31114-47	39 -	1
151-31114-52	39 -	1
151-31115	43 -77	REF
151-31115	42 -14	1
151-31116-25	47 -13	1
151-31116-27	46 -17	1
151-31116-29	47 -14	1
151-31116-3	46 -	1
151-31117-31	47 -28	1
151-31117-41	46 -20	1
151-31119-104	42A-	1
151-31119-106	42A-	1
151-31119-11	42A-16	1
151-31119-12	42A-	1
151-31119-13	42A-17	1
151-31119-14	42A-	1
151-31119-199	42 - 3	REF
151-31119-199	42A-	1
151-31119-200	42 -	REF

PART NUMBER	FIGURE AND INDEX NUMBER	QUANTITY
151-31119-200	42A-	1
151-31119-27	42A-	1
151-31119-29	42A-	1
151-31119-53	42A-	1
151-31119-55	42A-	1
151-31119-57	42A-	1
151-31119-59	42A-	1
151-31119-65	42A-	1
151-31119-66	42A-	1
151-31119-7	42A- 2	1
151-31119-8	42A-	1
151-31119-800	42A-	1
151-31119-83	42A- 1	1
151-31119-91	42A-	1
151-31120-102	40 -	1
151-31120-110	40 -	1
151-31120-119	40 -	1
151-31120-121	40 - 3	1
151-31120-21	40 -	1
151-31120-37	40 -	1
151-31121-11	46 -30	1
151-31121-13	46 -	1
151-31121-30	47 -44	1
151-31121-5	47 -43	1
151-31121-6	47 -	1
151-31122-13	46 -34	1
151-31122-17	47 -55	1
151-31122-18	47 -56	1
151-31122-25	47 -57	1
151-31122-5	47 -54	1
151-31122-6	47 -	1
151-31123-1	39 -16	1
151-31123-2	39 -	1
151-31126-3	49 - 5	1
151-31126-7	48 -14	1
151-31126-8	48 -15	1
151-31127-1	36 -59	REF
151-31127-1	51 -	1
151-31127-11	51 -37	1
151-31127-12	51 -	1
151-31127-13	51 -38	1
151-31127-15	51 -39	1
151-31127-16	51 -	1
151-31127-17	51 -40	1
151-31127-18	51 -	1
151-31127-19	51 -42	1
151-31127-20	51 -	1
151-31127-29	51 -36	1
151-31127-30	51 -	1
151-31127-34	51 -	1
151-31127-62	51 -	1
151-31127-801	51 -	1
151-31127-802	51 -	1
151-31127-951	51 -41	1
151-31127-952	51 -	1
151-31128	44 -	1
151-31128-13	44 - 5	1
151-31128-14	44 -	1
151-31128-19	44 - 4	1
151-31128-3	44 - 1	1
151-31128-30	44 -	1
151-31128-5	44 - 2	1
151-31128-7	44 - 3	1
151-31128-801	44 -19	1
151-31128-951	44 -12	1
151-31128-952	44 -10	1
151-31128-953	44 -11	1
151-31128-954	44 -13	1

PART NUMBER	FIGURE AND INDEX NUMBER	QUANTITY
151-31129-3	49 - 8	1
151-31129-31	48 -17	1
151-31129-5	48 -16	1
151-31129-6	48 -	1
151-31130-31	44 -	1
151-31130-32	44 -	1
151-31130-33	44 -20	1
151-31130-34	44 -21	1
151-31130-7	44 -22	1
151-31130-8	44 -23	1
151-31133-19	48 -22	1
151-31133-21	48 -23	1
151-31133-3	49 - 9	1
151-31133-5	48 -21	1
151-31133-6	48 -	1
151-31134-31	44 -36	1
151-31134-32	44 -37	1
151-31134-49	44 -	1
151-31134-50	44 -	1
151-31134-53	44 -31	1
151-31134-54	44 -32	1
151-31134-55	44 -33	1
151-31134-56	44 -	1
151-31134-7	44 -34	1
151-31134-8	44 -35	1
151-31134-91	44 -	1
151-31134-92	44 -	1
151-31135-17	49 -13	1
151-31135-19	48 -32	1
151-31135-20	48 -33	1
151-31135-5	48 -29	1
151-31135-6	48 -	1
151-31137	46 -	1
151-31139	55 -16	1
151-31141-13	43 -	1
151-31141-15	43 - 4	1
151-31141-17	43 -14	1
151-31141-19	43 -	1
151-31141-21	43 -	1
151-31141-23	43 -	1
151-31141-25	43 -15	1
151-31141-27	43 -16	1
151-31141-33	43 - 2	1
151-31141-41	43 -	1
151-31141-5	43 - 3	1
151-31141-51	91 -	REF
151-31141-51	43 - 1	1
151-31141-7	43 -13	1
151-31141-9	43 -12	1
151-31142	90 -79	REF
151-31142	43 -21	1
151-31142-11	43 -37	1
151-31142-13	43 -34	1
151-31142-15	43 -36	1
151-31142-17	43 -	1
151-31142-19	43 -24	1
151-31142-23	43 -35	1
151-31142-3	43 -22	1
151-31142-5	43 -23	1
151-31142-7	43 -33	1
151-31142-9	43 -	1
151-31142-951	43 -38	1
151-31143-11	43 -	1
151-31143-13	43 -56	1
151-31143-23	43 -	1
151-31143-31	43 -	1
151-31143-33	43 -	1
151-31143-35	43 -47	1

PART NUMBER	FIGURE AND INDEX NUMBER	QUANTITY
151-31143-37	43 -46	1
151-31143-39	43 -	1
151-31143-41	43 -	1
151-31143-51	43 -	1
151-31143-53	43 -	1
151-31143-55	43 -	1
151-31143-59	43 -48	1
151-31143-61	43 -	1
151-31143-7	43 -51	1
151-31143-9	43 -	1
151-31144-13	43 -70	1
151-31144-15	43 -64	1
151-31144-17	43 -65	1
151-31144-19	43 -66	1
151-31144-21	43 -58	1
151-31144-24	43 -72	1
151-31144-27	43 -71	1
151-31144-3	43 -59	1
151-31144-33	90 -80	REF
151-31144-33	43 -	1
151-31144-7	43 -63	1
151-31144-801	43 -	1
151-31144-9	43 -73	1
151-31144-951	43 -	1
151-31144-953	43 -60	1
151-31145-31	44 -60	1
151-31149-11	49 -12	1
151-31149-4	49 -	1
151-31150-30	50 -	REF
151-31150-30	45 -	1
151-31150-40	45 -	
151-31152-1	45 -21	1
151-31152-2	45 -	1
151-31153-1	49 - 6	1
151-31153-2	49 -	1
151-31154-12	49 -	1
151-31154-15	49 -14	1
151-31155	43 -49	
	43 -61	2
151-31156-1	44 -15	1
151-31156-2	44 -16	1
151-31157-1	44 - 8	1
151-31157-2	44 - 9	1
151-31158-21	298 -	2
151-31158-41	298 -	1
151-31158-42	298 -	1
151-31159-3	48 -41	1
151-31159-4	48 -	1
151-31161-10	44 -59	1
151-31161-11	44 -	1
151-31161-41	42 - 1	REF
151-31161-41	44 -	1
151-31161-7	44 -57	1
151-31161-801	44 -	1
151-31161-9	44 -58	1
151-31164-3	51 -32	1
151-31164-4	51 -	1
151-31166-61	298 -31	1
151-31166-62	298 -	1
151-31167-30	51 -11	1
151-31167-31	51 -	1
151-31168-11	51 - 5	1
151-31168-15	51 -	1
151-31169	51 -	1
151-31169-20	51 -	1
151-31170-6	50 -12	1
151-31170-7	293 -47	REF
151-31170-7	50 -11	1

PART NUMBER	FIGURE AND INDEX NUMBER	QUANTITY
151-31170-950	50 -	1
151-31172-27	47 - 4	1
151-31172-5	46 - 8	1
151-31172-7	46 -	1
151-31173-13	47 -12	1
151-31173-51	47 -11	1
151-31173-7	46 -14	1
151-31173-9	46 -15	1
151-31174-1	47 -24	1
151-31174-7	46 -19	1
151-31175-15	46 -	1
151-31175-29	45 -26	1
151-31175-3	47 -40	1
151-31175-33	47 -39	1
151-31175-35	46 -23	1
151-31175-4	47 -41	1
151-31175-40	47 -42	1
151-31175-6	47 -	1
151-31176-15	47 -48	1
151-31176-36	47 -49	1
151-31176-40	47 -50	1
151-31176-7	47 -47	1
151-31176-8	47 -	1
151-31176-9	46 -33	1
151-31177-19	45 -	1
151-31177-21	45 -25	1
151-31177-25	45 -	1
151-31177-5	45 -23	1
151-31177-6	45 -	1
151-31177-7	45 -24	1
151-31179	46 - 4	1
151-31181-10	47 -	2
151-31181-11	47 -32	2
151-31181-12	47 -	2
151-31181-2	47 -31	1
151-31181-31	47 -30	1
151-31181-5	47 -	1
151-31181-6	47 -	1
151-31181-7	47 -33	1
151-31181-8	47 -	1
151-31181-9	47 -	2
151-31182-10	46 -32	1
151-31182-9	46 -31	1
151-31183-11	48 -37	1
151-31183-12	48 -	1
151-31183-9	49 -15	1
151-31184-1	48 -42	1
151-31184-2	48 -	1
151-31185-11	48 -44	1
151-31185-12	48 -	1
151-31185-7	48 -38	1
151-31187	48 - 6	1
151-31188-3	48 - 5	1
151-31189	48 - 4	1
151-31190-1	48 - 2	1
151-31190-20	48 - 3	1
151-31191-11	48 -35	1
151-31191-12	48 -36	1
151-31193	48 -34	1
151-31194-1	302 -18	1
151-31194-2	302 -	1
151-31197-1	47 - 2	1
151-31197-2	47 - 3	1
151-31198-3	47 - 9	1
151-31198-4	47 -	1
151-31212-1	62 - 9	1
151-31212-2	63 - 7	1
151-31213-21	62 -10	1

PART NUMBER	FIGURE AND INDEX NUMBER	QUANTITY
151-31213-22	63 -	1
151-31216-1	2 -26	REF
	36 -57	
151-31216-1	62 -60	1
151-31216-2	63 -37	1
151-31220-10	65 - 1	REF
151-31220-10	65A-	1
151-31220-11	65A- 5	1
151-31220-13	65A- 6	1
151-31220-15	65A-	1
151-31220-17	65A- 8	1
151-31220-19	65A-	1
151-31220-21	65A- 7	1
151-31220-23	65A-	1
151-31220-27	65A- 4	1
151-31220-3	65A- 1	1
151-31220-5	65A- 3	1
151-31220-803	65A-	1
151-31220-810	65A-	1
151-31220-827	65A-	1
151-31220-9	65A- 2	1
151-31221-17	51 -53	1
151-31221-19	51 -54	1
151-31221-33	51 -	1
151-31221-45	51 -55	1
151-31221-7	51 -51	1
151-31221-801	51 -	1
151-31221-803	51 -	1
151-31221-9	51 -52	1
151-31221-955	51 -	1
151-31221-957	51 -	1
151-31221-959	51 -	1
151-31222	51 -	1
151-31222-17	51 -	1
151-31222-19	51 -	1
151-31222-45	51 -	1
151-31222-60	51 -	1
151-31222-7	51 -	1
151-31222-800	51 -	1
151-31222-9	51 -	1
151-31225-10	62 -12	1
151-31226-20	63 -	1
151-31227-10	62 -15	1
151-31228-10	63 -	1
151-31229-10	62 -18	1
151-31230-10	63 -16	1
151-31232-37	63 -	2
151-31232-47	63 -38	1
151-31232-48	63 -	1
151-31232-52	63 -	1
151-31232-57	63 -	1
151-31232-59	63 -	1
151-31232-60	63 -	1
151-31235-1	62 -62	1
151-31235-2	63 -13	1
151-31251	61 - 1	1
151-31256	61 - 2	1
151-31268	63 -10	1
151-31270-2	63 -	1
151-31276-1	36 -58	REF
151-31276-1	56 -21	1
151-31276-2	56 -	1
151-31277-11	56 -23	1
151-31277-2	56 -	1
151-31279	65A-18	1
151-31283-1	62 -55	1
151-31283-2	63 -	1
151-31298	63 -	2

PART NUMBER	FIGURE AND INDEX NUMBER	QUANTITY
151-31314-3	73 -11	1
151-31314-31	74 -46	1
151-31314-32	74 -	1
151-31316-31	74 -	1
151-31316-61	74 -47	1
151-31316-62	74 -	1
151-31316-802	74 -	1
151-31316-804	74 -	1
151-31316-952	74 -	1
151-31317-60	77 - 2	1
151-31319-1	75 - 7	1
151-31319-2	75 -	1
151-31345	75 - 6	1
151-31350-52	74 -	1
151-31350-81	74 -52	1
151-31351-31	77 -28	1
151-31351-32	77 -	1
151-31358-13	74 -	2
151-31358-3	62 - 4	
	62 - 8	
	63 -	
	63 - 6	
	74 -	6
151-31358-5	74 -	2
151-31358-7	74 -	2
151-31359-1	74 -	1
151-31359-2	74 -	1
151-31361-11	77 -45	1
151-31361-12	77 -	1
151-31362-1	74 -	1
151-31362-2	74 -	1
151-31363-1	74 -	1
151-31363-2	74 -	1
151-31364-1	77 -62	1
151-31364-2	77 -	1
151-31365-3	75 - 8	1
151-31365-4	75 -	1
151-31373-21	77 -	1
151-31373-22	77 -	1
151-31373-3	77 -13	1
151-31373-4	77 -	1
151-31385-1	77 -22	1
151-31385-2	77 -	
	77 -	2
151-31388-1	79 -28	1
151-31388-2	79 -	1
151-31389-1	79 -29	1
151-31389-2	79 -	1
151-31391-1	74 -50	1
151-31391-2	74 -	1
151-31400	38 -	2
151-31404-13	37 -	1
151-31404-15	37 -	1
151-31404-17	37 -	1
151-31404-51	37 -21	1
151-31405-11	37 -22	1
151-31405-5	37 -	1
151-31406-10	37 -24	1
151-31406-11	37 -	1
151-31406-12	37 -	1
151-31406-5	37 -	1
151-31406-6	37 -	1
151-31406-7	37 -	1
151-31406-8	37 -	1
151-31406-9	37 -23	1
151-31413-1	37 -	1
151-31414-1	37 -11	1
151-31414-2	37 -	1

PART NUMBER	FIGURE AND INDEX NUMBER	QUANTITY
151-31425-11	38 - 8	4
151-31425-15	38 - 9	2
151-31425-17	38 -	2
151-31431	43 -52	1
151-31431-811	43 -53	2
151-31431-951	43 -	2
151-31432	43 -57	1
151-31433	40 -	1
151-31439	40 - 9	1
151-31440	40 -	1
151-31441	40 -	1
151-31442-10	40 -	1
151-31442-3	40 -	1
151-31443-1	40 - 8	
	47 -45	2
151-31443-2	40 -	
	47 -46	2
151-31444-11	39 -	1
151-31444-12	39 -	1
151-31447-1	44 -48	1
151-31447-2	44 -49	1
151-31449-15	51 -18	1
151-31449-16	51 -	1
151-31449-21	51 -	1
151-31449-22	51 -	1
151-31449-801	51 -	1
151-31449-802	51 -	1
151-31450-1	44 -25	1
151-31450-2	44 -26	1
151-31451-1	44 -27	1
151-31451-2	44 -28	1
151-31452-1	44 -40	1
151-31452-2	44 -41	1
151-31453-1	44 -38	1
151-31453-2	44 -39	1
151-31455-1	39 -19	1
151-31455-2	39 -	1
151-31456-1	44 -17	1
151-31456-2	44 -18	1
151-31458-1	51 -43	1
151-31458-2	51 -	1
151-31459-3	39 -20	1
151-31459-4	39 -	1
151-31460-1	39 -21	1
151-31460-2	39 -	1
151-31461-1	39 -22	1
151-31461-2	39 -	1
151-31462	39 -30	1
151-31462-7	39 -	1
151-31463	39 -	1
151-31464	44 -70	1
151-31465-1	39 -17	1
151-31465-2	39 -	1
151-31466-15	44 -68	1
151-31467-15	44 -69	1
151-31468	42 -	1
151-31470	40 -38	2
151-31472-1	42 -	1
151-31473-1	51 -44	1
151-31473-4	51 -45	1
151-31477	48 -20	1
151-31479-1	42A- 3	1
151-31479-2	42A-	1
151-31480-1	44 -29	1
151-31480-2	44 -30	1
151-31481-1	40 -26	1
151-31481-2	40 -	1
151-31482-1	40 -	1

PART NUMBER	FIGURE AND INDEX NUMBER	QUANTITY
151-31482-2	40 -	1
151-31482-951	40 -	1
151-31482-952	40 -	1
151-31483-1	40 -	1
151-31483-2	40 -	1
151-31483-5	40 -24	1
151-31483-6	40 -	1
151-31483-801	40 -	1
151-31483-802	40 -	1
151-31485-1	44 -42	1
151-31485-2	44 -	1
151-31491	47 -27	1
151-31494	50 -15	1
151-31497	46 - 5	1
151-31498	46 - 6	1
151-31499	46 - 7	1
151-31501	66 -19	1
151-31514	51 -56	2
151-31520-3	36 - 5	1
151-31523-15	36 - 4	1
151-31524-10	36 - 7	1
151-31525-3	36 - 6	1
151-31526-2	36 -	1
151-31526-3	36 - 9	1
151-31528-3	42 -	1
151-31530-1	36 -18	1
151-31530-2	36 -	1
151-31532	36 -	2
151-31533-1	36 -28	1
151-31533-2	36 -	1
151-31538-3	56 -58	1
151-31538-4	56 -	1
151-31545-3	36 -11	1
151-31545-4	36 -	1
151-31551	74 -30	2
151-31551-800	74 -	
	74 -	1
151-31551-953	74 -	
151-31552-802	74 -56	1
151-31553-1	77 -61	1
151-31553-2	77 -	1
151-31564	77 -17	1
151-31565-1	77 -16	1
151-31565-2	77 -	
	77 -	2
151-31569-1	77 - 6	1
151-31569-2	77 -	
	77 -	2
151-31570-1	45 -	1
151-31570-2	45 -18	1
151-31574-1	75 -10	1
151-31574-2	75 -	1
151-31579-1	74 -	1
151-31579-2	74 -	1
151-31581-51	74 -39	1
151-31581-52	74 -	1
151-31582-1	74 -	1
151-31582-2	74 -	1
151-31583-1	74 -	1
151-31583-2	74 -	1
151-31591	32 -31	2
151-31592-1	74 -18	1
151-31592-2	74 -	1
151-31593-11	62 -84	REF
151-31593-11	74 -53	1
151-31593-12	63 -67	REF
151-31593-12	74 -	1
151-31593-13	74 -	1

PART NUMBER	FIGURE AND INDEX NUMBER	QUANTITY
151-31593-14	74 -	1
151-31596-1	74 -	1
151-31596-2	74 -	1
151-31597-1	74 -	1
151-31597-2	74 -	1
151-31598-3	73 -13	1
151-31606-21	49 -21	1
151-31609	54 -26	4
151-31610	54 -28	4
151-31611-30	39 -31	1
151-31614	49 - 7	1
151-31615	49 -10	1
151-31616	49 -11	1
151-31617-3	49 -	1
151-31617-4	49 -	1
151-31617-5	49 -	1
151-31617-6	49 -	1
151-31617-7	45 -22	1
151-31617-8	45 -	1
151-31618-1	49 -	1
151-31618-2	49 -	1
151-31619-11	51 - 4	1
151-31619-4	51 -	1
151-31619-7	51 -	1
151-31620	51 - 6	2
151-31621	55 - 5	1
151-31622	55 -	1
151-31624	51 -14	1
151-31625	42 -	1
151-31628-31	51 -30	1
151-31628-32	51 -	1
151-31629-26	51 -	1
151-31629-33	51 -28	1
151-31629-951	51 -	1
151-31631-3	51 -29	1
151-31631-4	51 -	1
151-31632	51 -	1
151-31633	42 -11	1
151-31634	42 -	1
151-31635	42 -	1
151-31636-1	42 -12	1
151-31636-2	42 -	4
151-31637	42 -	1
151-31638	39 -35	1
151-31639	40 -39	1
151-31640	39 -51	1
151-31641-3	46 -24	1
151-31641-5	46 -25	1
151-31642-3	91 -30	REF
151-31642-3	46 -26	1
151-31642-5	46 -27	1
151-31643	43 -62	1
151-31647	48 -45	1
151-31648-3	49 -	1
151-31648-4	49 -	1
151-31649	48 -28	1
151-31650-20	45 - 8	1
151-31651	46 - 9	1
151-31652-1	49 - 3	1
151-31652-2	49 - 4	1
151-31652-801	49 -	1
151-31652-802	49 -	1
151-31653	43 -75	REF
151-31653	46 -12	1
151-31654	43 -76	REF
151-31654	46 -13	1
151-31655	46 -28	1
151-31657-3	46 -29	1

PART NUMBER	FIGURE AND INDEX NUMBER	QUANTITY
151-31658	47 -29	2
151-31662	45 - 7	1
151-31664-1	48 -	1
151-31664-2	48 -	1
151-31665-30	55 - 3	1
151-31667	45 -	2
151-31672	46 -22	1
151-31673	46 -21	1
151-31675	48 -	1
151-31690-3	2 -28	REF
151-31690-3	62 -22	1
151-31690-4	63 -20	1
151-31692-11	62 -40	1
151-31692-12	63 -	1
151-31701	61 -15	1
151-31703	33 -48	2
151-31704-3	48 -	1
151-31704-4	48 -	1
151-31705-11	43 -68	1
151-31706	43 -74	1
151-31708-10	46 -11	1
151-31709-801	54 -19	1
151-31709-802	54 -	1
151-31710-5	35 -16	1
151-31710-800	35 - 1	1
151-31710-951	35 -11	1
151-31711-17	35 -	1
151-31711-19	35 -32	1
151-31711-3	35 - 2	1
151-31711-5	35 -31	1
151-31711-9	35 - 4	1
151-31711-951	35 -	1
151-31711-952	35 - 5	1
151-31711-953	35 -	1
151-31711-955	35 - 3	1
151-31712-800	35 - 6	1
151-31712-951	35 - 7	1
151-31714	35 -22	1
151-31716-21	35 -23	1
151-31716-23	35 -24	1
151-31716-25	35 -25	1
151-31716-27	35 -26	1
151-31717	42 -	1
151-31718-1	51 -27	1
151-31718-12	51 -	1
151-31718-31	51 -	1
151-31719-1	51 -	1
151-31719-2	51 -	1
151-31720-1	42 -39	2
151-31720-2	42 -45	2
151-31721-1	42 -	2
151-31721-2	42 -	2
151-31722	35 -54	REF
151-31722	42 -38	1
151-31723-1	40 -	1
151-31723-2	40 -	1
151-31724-1	51 -24	1
151-31724-2	51 -	1
151-31726	51 -46	1
151-31727	51 -47	1
151-31728	42 -40	1
151-31729	42 -46	1
151-31730-802	39 - 2	REF
	91 -	
151-31730-802	42 -	1
151-31730-803	42 -	1
151-31730-805	42 -	1
151-31731-105	39 -15	1

PART NUMBER	FIGURE AND INDEX NUMBER	QUANTITY
151-31731-106	39 -	1
151-31731-107	39 -23	1
151-31731-108	39 -	1
151-31731-109	39 -27	1
151-31731-11	39 -	1
151-31731-110	39 -	1
151-31731-111	39 -	1
151-31731-112	39 -	1
151-31731-113	39 -	1
151-31731-114	39 -	1
151-31731-115	39 -	1
151-31731-116	39 -	1
151-31731-117	39 -	2
151-31731-12	39 -	1
151-31731-121	39 -	1
151-31731-122	39 -	1
151-31731-127	39 -40	1
151-31731-128	39 -	1
151-31731-129	39 -39	1
151-31731-13	39 -	2
151-31731-130	39 -	1
151-31731-133	39 -	
	39 -	2
151-31731-137	40 -22	1
151-31731-138	40 -	1
151-31731-139	39 -	1
151-31731-143	40 -34	1
151-31731-144	40 -	1
151-31731-145	40 -35	1
151-31731-15	39 -36	2
151-31731-168	39 -	1
151-31731-17	39 -37	2
151-31731-173	39 -45	1
151-31731-19	40 -	1
151-31731-27	40 -28	1
151-31731-28	40 -	1
151-31731-29	39 -32	1
151-31731-31	39 -33	1
151-31731-33	39 -34	1
151-31731-43	39 -	2
151-31731-45	39 -50	1
151-31731-57	39 -42	1
151-31731-58	39 -	1
151-31731-59	40 -18	1
151-31731-60	40 -	1
151-31731-61	39 -12	1
151-31731-62	39 -	1
151-31731-63	39 -13	1
151-31731-64	39 -	1
151-31731-65	39 -14	1
151-31731-66	39 -	1
151-31731-7	39 -44	1
151-31731-8	39 -	1
151-31731-806	36 - 1	REF
	40 -	
	90 -	
151-31731-806	39 -	1
151-31731-810	39 -	1
151-31731-814	39 -	1
151-31731-816	39 -	1
151-31731-817	39 -	1
151-31731-818	39 -	1
151-31731-821	90 -	2
151-31731-823	90 -	1
151-31731-825	90 -	2
151-31731-84	40 -	1
151-31731-93	39 -	1
151-31731-94	39 -	1

PART NUMBER	FIGURE AND INDEX NUMBER	QUANTITY
151-31731-95	39 -46	1
151-31731-955	39 -41	1
151-31731-956	39 -	1
151-31731-957	39 -43	1
151-31731-958	39 -	1
151-31731-959	40 -	1
151-31731-96	39 -	1
151-31731-960	40 -	1
151-31731-963	40 -	1
151-31731-964	40 -	1
151-31731-965	40 -	2
151-31731-97	39 -	1
151-31731-98	39 -	1
151-31733-1	35 -52	REF
151-31733-1	42 -37	1
151-31733-2	35 -53	REF
151-31733-2	42 -42	1
151-31734-1	51 -	1
151-31734-2	51 -	1
151-31735	35 -55	REF
151-31735	42 -43	1
151-31736-101	44 -	1
151-31736-11	44 -55	1
151-31736-12	44 -	1
151-31736-15	44 -50	1
151-31736-16	44 -51	1
151-31736-17	44 -52	1
151-31736-31	44 -53	1
151-31736-32	44 -54	1
151-31736-33	44 -44	1
151-31736-35	44 -	1
151-31736-47	44 -	1
151-31736-51	44 -56	1
151-31736-52	44 -	1
151-31736-53	44 -43	1
151-31736-801	44 -	1
151-31736-951	44 -	1
151-31737-10	42 -	1
151-31737-19	42 -32	1
151-31737-23	42 -31	1
151-31737-25	42 -	1
151-31737-27	42 -	1
151-31737-47	42 -	1
151-31737-49	42 -33	1
151-31737-51	42 -34	1
151-31737-53	42 -	1
151-31737-55	42 -	1
151-31737-57	42 -	1
151-31737-63	42 -29	1
151-31737-9	42 -30	1
151-31738	42 -36	1
151-31738-5	42 -	1
151-31739	42 -41	1
151-31739-5	42 -	1
151-31741-1	49 -17	1
151-31741-2	49 -	1
151-31742-1	49 -20	1
151-31742-2	49 -	1
151-31743-1	49 -23	1
151-31743-2	49 -	1
151-31744	52 -11	
	52 -16	
	52 -19	
	52 -24	4
151-31745-1	42 -18	1
151-31745-2	42 -	1
151-31746	51 -	2
151-31747-1	51 -22	1

PART NUMBER	FIGURE AND INDEX NUMBER	QUANTITY
151-31747-2	51 -	1
151-31749	53 -	1
151-31749-10	51 - 3	REF
151-31749-10	53 -	1
151-31749-13	53 -39	1
151-31749-3	53 -	1
151-31749-5	53 -40	1
151-31753-1	36 -21	1
151-31753-2	36 -	1
151-31754-1	51 -25	1
151-31754-2	51 -	1
151-31756-10	36 - 8	1
151-31757-1	51 -33	1
151-31757-2	51 -	1
151-31758	36 -13	1
151-31760-1	298 -	1
151-31760-2	298 -	1
151-31761	36 -12	1
151-31762	55 -18	1
151-31763-2	63 -	3
151-31764-2	63 -	3
151-31766-3	62 -	1
151-31766-4	63 -27	1
151-31767-1	62 -	1
151-31767-2	63 -	1
151-31768	36 -	2
151-31769-4	63 -	1
151-31769-6	63 -	1
151-31770-2	63 -	2
151-31773-1	62 -25	1
151-31773-2	63 -19	1
151-31777-10	63 -15	1
151-31777-12	63 -18	1
151-31777-14	63 -	1
151-31777-17	62 -20	1
151-31777-19	62 -26	1
151-31777-24	63 -12	1
151-31777-3	62 -13	1
151-31777-5	62 -14	1
151-31777-7	62 -16	1
151-31777-8	63 -14	1
151-31777-9	62 -17	1
151-31779-17	62 -11	1
151-31780	63 - 8	1
151-31782-1	36 -32	1
151-31782-2	36 -	1
151-31785	63 - 9	1
151-31786	63 -41	1
151-31787	62 -87	REF
151-31787	32 - 8	2
151-31788-801	62 -86	REF
151-31788-801	32 - 9	2
151-31790	62 -	
	63 -59	3
151-31792-1	1 -	REF
151-31792-1	57 -	NP
151-31792-2	1 -	REF
151-31792-2	57 -	NP
151-31792-801	57 -	NP
151-31793-3	57 -15	1
151-31793-4	57 -	1
151-31793-951	57 -	1
151-31794-1	57 -16	1
151-31794-2	57 -	1
151-31798	62 -76	2
151-31810	71 -65	1
151-31813	38 -17	1
151-318139-3	55 -	1

PART NUMBER	FIGURE AND INDEX NUMBER	QUANTITY
151-318139-5	55 -	1
151-318139-800	55 -20	1
151-318139-802	55 -	1
151-318139-804	55 -	1
151-31814	71 -26	2
151-318141	55 -	2
151-318142	124 -11	2
151-31815	70 -	2
151-31815-3	70 -62	2
151-31824	70 -40	1
151-31826	70 -34	1
151-31830	71 -12	2
151-31831	71 -13	2
151-31832-11	38A-10	1
151-31832-12	38A-	1
151-31833-10	38A-15	1
151-31840	70 -30	1
151-31842-9	68 -46	REF
	69 -47	
151-31842-9	47 -69	1
151-31843-10	71 -	1
151-31843-9	71 - 6	1
151-31844-1	71 -	1
151-31844-2	71 -	1
151-31844-3	71 - 7	2
151-31844-5	71 - 8	2
151-31845	71 - 9	2
151-31847-1	71 -15	1
151-31847-2	71 -	1
151-31849	70 -36	1
151-31850	38 -	1
151-31859	70 -	1
151-31859-3	70 -55	1
151-31884-10	67 -29	1
151-31888-1	38A-18	1
151-31888-2	38A-	1
151-33001-1	1 - 5	REF
	97 -	
151-33001-1	92 -	NP
151-33001-2	1 -	REF
	97 -	
151-33001-2	92 -	NP
151-33101-31	92 -	REF
151-33101-31	93 -	1
151-33101-32	92 -	REF
151-33101-32	93 -	1
151-33101-801	93 -	1
151-33101-802	93 -	1
151-33113	98 -11	2
151-33114	98 -14	8
151-33115	98 -18	2
151-33116-1	98 - 9	2
151-33116-2	98 -	2
151-33117	98 - 4	2
151-33118	98 - 2	2
151-33119	98 - 6	2
151-33120-1	98 - 1	REF
151-33120-1	99 -	1
151-33120-2	98 -	REF
151-33120-2	99 -	1
151-33120-801	99 -	1
151-33120-802	99 -	1
151-33121-1	99 - 1	1
151-33121-2	99 -	1
151-33121-801	99 -	1
151-33121-802	99 -	1
151-33130	99 - 6	2
151-33132	99 -11	2

PART NUMBER	FIGURE AND INDEX NUMBER	QUANTITY
151-33307	96 -23	4
151-33352	99 -22	2
151-33354-1	99 -21	1
151-33354-2	99 -	1
151-33359	93 -	4
151-33511-1	98 -	1
151-33511-11	98 -	1
151-33511-111	98 -	1
151-33511-112	98 -	1
151-33511-113	98 -	1
151-33511-114	98 -	1
151-33511-12	98 -	1
151-33511-2	98 -	1
151-33512-1	92 -37	REF
151-33512-1	98 -27	1
151-33512-2	98 -	1
151-33514	98 -34	4
151-33515	92 -34	2
151-33516	233 -16	REF
151-33516	98 -35	
	201 -19	4
151-33542-1	65 -28	1
151-33542-2	65 -	1
151-33565-3	65A-	1
151-33565-4	65A-	1
151-33566-1	65A-10	1
151-33566-2	65A-	1
151-33570-1	97 -41	REF
151-33570-1	65A-11	1
151-33570-2	65A-	1
151-33571	97 -	2
151-33571-7	97 -22	2
151-33572-11	97 -	2
151-33572-21	97 -18	2
151-33575-3	97 -19	2
151-33575-4	97 -24	2
151-33601-820	1 -	REF
151-33601-820	100 -	NP
151-33603	100 -75	REF
151-33603	41 -30	1
151-33604	41 -31	1
151-33605	100 -72	REF
151-33605	39A- 3	1
151-33606	100 -71	REF
151-33606	42A- 4	1
151-33607	91 -23	1
151-33610	100 -69	REF
151-33610	38 - 2	1
151-33614	65A-	1
151-33615-1	65A-14	1
151-33615-2	65A-	1
151-33617	65A-15	4
151-33619	68 - 3	
	68 -	
	69 - 3	
	69 -	
	100 - 2	5
151-33620	100 -70	REF
151-33620	42A- 8	1
151-33626	90 - 4	1
151-33628	100 -36	1
151-33629	100 -53	
	101 - 7	
	101 -13	4
151-33630-10	100 -	1
151-33630-800	100 -	1
151-33631	100 -41	1
151-33632	100 -33	1

PART NUMBER	FIGURE AND INDEX NUMBER	QUANTITY
151-33633	100 -15	1
151-33635-11	41 -45	REF
151-33635-11	100 - 5	1
151-33635-13	100 -	
151-33637	100 -20	1
151-33638-815	100 -24	1
151-33639-813	100 -31	1
151-33639-815	100 -	
151-33640	100 -57	
	101 -11	2
151-33641	101 -17	REF
151-33641	100 -59	1
151-33642	100 -65	
	101 - 1	2
151-33644	100 -	1
151-33645	100 -35	1
151-33646	100 -18	1
151-34001-10	1 - 4	REF
	36 -	
	86 -	
	87 -	
	90 -	
151-34001-10	81 -	NP
151-34101-105	81 - 1	REF
151-34101-105	82 -	1
151-34103	82 -39	1
151-34112-11	84 - 1	1
151-34112-15	84 -	1
151-34116	84 - 2	2
151-34141	81 - 2	REF
	154 -46	
151-34141	85 -	1
151-34142-3	85 - 8	1
151-34142-5	85 -	1
151-34143-3	85 - 1	1
151-34143-5	85 -	1
151-34144	85 -12	1
151-34145	188 -69	REF
	214 -16	
151-34145	85 - 5	1
151-34352	88 -30	REF
151-34352	42 - 5	1
151-34353	42 - 7	1
151-34354	42 -47	REF
	81 -16	
151-34354	88 - 2	2
151-34355	88 - 5	2
151-34356	82 -	1
151-34357	88 -28	REF
151-34357	82 -	1
151-34357-3	82 -28	1
151-34358	88 -	1
151-34359	81 -15	REF
151-34359	88 - 8	1
151-34360	88 - 9	1
151-34362	88 -10	1
151-34363	81 - 9	2
151-34364	82 -30	1
151-34367	88 -18	1
151-34369	88 -29	REF
151-34369	82 -33	1
151-34370	88 -	1
151-34371	81 -14	REF
151-34371	88 -22	1
151-34374	88 -	1
151-34374-3	88 -23	1
151-34375	88 -24	1
151-34380-10	81 - 3	REF

PART NUMBER	FIGURE AND INDEX NUMBER	QUANTITY
151-34380-10	88 -	1
151-34381	88 -	1
151-34381-3	88 -14	1
151-34381-4	88 - 1	1
151-34381-7	88 -15	1
151-34396	88 -	1
151-34396-3	88 -21	1
151-34396-4	88 -16	1
151-34396-7	88 -26	1
151-34397	88 -17	1
151-34502	90 -81	REF
151-34502	91 - 1	1
151-34503	91 - 2	1
151-34504	91 - 3	1
151-34505	91 - 4	1
151-34506	188 -68	REF
	214 -15	
151-34506	91 - 5	1
151-34506-7	91 -	1
151-34508	90 -69	1
151-34509	91 -12	1
151-34513	90 -74	1
151-34514	90 -70	1
151-34515	90 -75	1
151-34522	91 -18	1
151-34523	91 -21	1
151-34549	90 -	1
151-34549-5	89 -22	REF
151-34549-5	90 -65	1
151-34549-9	90 -	1
151-34550	90 -66	1
151-34604	41 -25	1
151-34605	86 -33	REF
151-34605	41 -26	1
151-34606	41 -27	1
151-34607	41 -28	1
151-34608	42A-10	1
151-34609	42A- 9	1
151-34610	42 -15	1
151-34625	86 -27	1
151-34631	41 -44	REF
151-34631	86 -23	1
151-34632	86 -24	1
151-34633	46 -	1
151-34634	46 -	1
151-34636	85 -23	1
151-34637	85 -24	1
151-34651	84 -	1
151-34652	82 -56	1
151-34654	87 -27	1
151-34654-7	87 -	1
151-34659	87 -34	REF
151-34659	46 -18	1
151-34660-5	87 - 1	1
151-34664	87 -	1
151-34665	87 -24	AR
151-34666	87 -23	1
151-34667	87 -32	1
151-34668	87 -31	1
151-34674	84 -10	1
151-34680	86 -34	REF
151-34680	87 -	1
151-34681	87 -	1
151-34681-3	87 - 7	1
151-34682	87 - 6	1
151-34683	87 -12	2
151-34684	87 - 4	1
151-34685	87 - 3	1

PART NUMBER	FIGURE AND INDEX NUMBER	QUANTITY
151-34685-800	87 -	1
151-34686	87 - 5	2
151-34687	87 - 2	1
151-34687-3	87 -	1
151-34687-5	87 -	1
151-34687-7	87 -	1
151-39002-1	32 -43	REF
	73 -	
151-39002-1	80 -	NP
151-39002-2	73 -	REF
151-39002-2	80 -	NP
151-39002-801	80 -	AR
	80 -	
	80 -	
151-39013	80 -	
	80 -	4
151-39025-3	80 -20	1
151-39025-4	80 -	1
151-42006	108 -11	
	108 -25	
	108 -42	9
151-42012	108 -12	
	108 -26	
	108 -43	9
151-42013	108 -13	
	108 -27	
	108 -44	9
151-42019-801	108 -38	1
151-42086	75 -22	1
151-43030	113 -35	REF
	114 -40	
151-43030	112 -29	1
151-43030-3	112 -	1
151-43031	112 -	1
151-43032	112 -16	1
151-43034	37 -31	1
151-43038	112 -11	1
151-43040	113 -22	1
151-43041	112 - 4	1
151-43042	115 - 1	1
151-43042-3	116 -	1
151-43042-800	116 - 1	1
151-43043	113 -30	1
151-43044	113 - 9	1
151-43045	113 -	1
151-43046	113 -12	1
151-43047	113 -13	1
151-43048	113 -20	
	114 -20	2
151-43049	113 -19	1
151-43054-5	113 - 3	
	114 - 3	2
151-43054-805	114 - 4	1
151-43055	115 - 3	1
151-43057	113 - 8	
	114 -10	2
151-43057-3	113 -	
	114 -	2
151-43058	115 - 6	
	116 - 6	2
151-43061	115 -24	1
151-43062	115 -25	1
151-43063	115 -27	1
151-43064-3	115 -23	1
151-43067	115 -31	1
151-43068	113 -26	
	114 -25	2
151-43069-5	113 -31	1

PART NUMBER	FIGURE AND INDEX NUMBER	QUANTITY
151-43069-7	113 -25	1
151-43071	115 -29	1
151-43078	115 -33	1
151-43079-3	113 -	1
151-43079-5	186 -21	REF
151-43079-5	113 -18	1
151-43083	115 -35	1
151-43086	112 -14	1
151-43095	113 -27	1
151-43099	53 -31	1
151-43101	37 -36	1
151-43107	112 -24	1
151-43107-800	112 -	1
151-43110	112 -	1
151-43110-800	112 -	1
151-43111	112 -	1
151-43112	115 -43	1
151-43113	115 -41	1
151-43114	115 -	1
151-43115	115 -34	1
151-43116	115 -39	1
151-43117-3	115 -	1
151-47070	270 -12	1
151-47073	270 - 3	1
151-48002-11	245 -10	10
151-48002-16	245 -13	5
151-48002-17	245 -12	5
151-48002-18	245 -15	2
151-48002-19	245 -16	2
151-48002-20	245 -14	1
151-48002-25	245 -	2
151-48002-27	245 -18	5
151-48002-29	245 -20	5
151-48002-3	253 -61	REF
151-48002-3	245 - 1	1
151-48002-31	245 -19	5
151-48002-5	245 -22	1
151-48002-501	245 -	1
151-48002-6	245 - 7	2
151-48002-7	245 - 8	4
151-48002-8	245 - 9	2
151-48002-9	245 -23	1
151-48003-103	248 -	1
151-48003-104	248 -	1
151-48003-12	248 -10	4
151-48003-13	248 -11	4
151-48003-14	248 -12	16
151-48003-15	248 -17	4
151-48003-16	248 -15	8
151-48003-18	248 -16	4
151-48003-19	248 - 4	2
151-48003-20	248 -18	4
151-48003-21	248 -19	2
151-48003-22	248 -20	2
151-48003-23	248 -	1
151-48003-24	248 -	1
151-48003-35	248 - 2	2
151-48003-37	248 -	8
151-48003-39	248 -	4
151-48003-41	248 -	4
151-48003-43	248 -	4
151-48003-45	248 -	4
151-48003-55	248 -	4
151-48003-57	248 -13	4
151-48003-59	248 -14	16
151-48003-7	248 - 5	2
151-48003-701	248 -	1
151-48003-702	248 -	1

PART NUMBER	FIGURE AND INDEX NUMBER	QUANTITY
151-48003-8	248 - 6	2
151-48003-801	248 -	1
151-48003-802	248 -	1
151-48003-93	144 -16	REF
151-48003-93	248 - 1	1
151-48003-94	248 -	1
151-48005	247 - 5	2
151-48006	247 - 7	2
151-48007	247 - 8	2
151-48008-1	247 - 3	1
151-48008-2	247 -	1
151-48009-21	247 - 4	1
151-48009-22	247 -	1
151-48010	247 - 6	2
151-48011-801	244 -	1
151-48012-111	244 -29	1
151-48015	244 -30	2
151-48016	244 -31	1
151-48017	244 -32	1
151-48018-1	247 -	NP
151-48018-2	247 -	NP
151-48019	244 -	NP
151-48025	244 -51	REF
151-48025	245 -37	
	250 -16	3
151-48026-21	12 -	1
151-48026-22	12 -	1
151-48029-11	12 -19	2
151-48030-11	11 -14	2
151-48035	251 - 1	1
151-48037-11	251 -	1
151-48038	251 -	1
151-48039-11	251 - 8	1
151-48042-3	244 -33	1
151-48042-4	244 -34	1
151-48049	251 - 7	1
151-48051	250 -18	2
151-48058	254 -25	REF
151-48058	61 -14	1
151-48059-11	250 -	1
151-48061-11	32 -37	REF
151-48061-11	252 -52	1
151-48063	63 -	1
151-48064-11	244 -17	2
151-48065	63 -44	1
151-48073-11	252 -70	REF
151-48073-11	63 -45	1
151-48073-801	63 -	1
151-48074	252 -	1
151-48076-1	253 -53	1
151-48076-2	253 -	1
151-48077	249 -23	1
151-48078-31	249 -	1
151-48079	61 -	1
151-48079-11	61 -13	1
151-48079-13	61 -	1
151-48079-3	61 -	1
151-48079-5	61 - 9	1
151-48079-7	61 -10	1
151-48080	253 -37	1
151-48088	255 - 8	1
151-48095	253 - 7	2
151-48096	253 -52	1
151-48100-3	244 -35	2
151-48100-5	244 -36	2
151-48100-7	244 -37	2
151-48101	248 -26	2
151-48101-11	249 -	2

PART NUMBER	FIGURE AND INDEX NUMBER	QUANTITY
151-48102	248 -38	
	249 -33	6
151-48103	248 -35	
	249 -30	6
151-48104	248 -37	
	249 -35	12
151-48105	248 -30	4
151-48108	248 -42	
	249 -34	12
151-48109	246 - 2	
	246 -11	12
151-48112	248 -	4
151-48113	246 -13	REF
151-48113	248 -	4
151-48113-11	249 -	2
151-48115-1	248 -24	1
151-48115-2	248 -	1
151-48116	247 -38	2
151-48117	246 -12	2
151-48118	248 -39	
	249 -	6
151-48118-3	249 -36	2
151-48119	249 -37	2
151-48120	4 -	1
151-48121-1	4 -	1
151-48121-2	4 -	1
151-48122	244 -48	REF
151-48122	245 -24	
	248 -25	
	250 -29	4
151-48123	246 - 4	4
151-48126-31	246 - 1	2
151-48126-32	246 -	2
151-48127	244 -38	1
151-48128-11	244 -43	1
151-48128-3	244 -39	1
151-48128-5	244 -40	1
151-48128-7	244 -41	1
151-48128-9	244 -42	1
151-48129-11	245 -45	REF
151-48129-11	244 - 7	1
151-48131	78 -18	1
151-48132	78 -	1
151-48135-11	249 -47	REF
151-48135-11	246 -10	2
151-48139	77 -50	1
151-48142-13	265 -46	2
151-48142-29	254 -	1
151-48142-301	254 -	1
151-48142-33	254 - 6	1
151-48142-41	247 -31	2
151-48142-51	252 -59	1
151-48143-800	36 -	
	36 -	2
151-48156-101	282 - 1	REF
151-48156-101	283 -	1
151-48156-51	283 - 1	1
151-48156-7	283 - 3	1
151-48157	283 - 2	1
151-48158-1	282 -41	REF
	283 -10	
151-48158-1	62 -35	2
151-48158-2	62 -36	2
151-48162	62 -34	2
151-48176-3	248 -34	4
151-48176-5	249 -31	2
151-48177-3	248 -	4
151-48177-5	248 -	4

PART NUMBER	FIGURE AND INDEX NUMBER	QUANTITY
151-48177-7	245 -11	5
151-48179	244 -18	4
151-48180-1	247 -41	1
151-48180-2	247 -	1
151-48180-801	247 -	1
151-48180-802	247 -	1
151-48181	244 -	2
151-48185	247 -19	2
151-48187	247 - 9	2
151-48188	247 -11	2
151-48189	247 -17	2
151-48190-961	247 -12	2
151-48190-963	247 -14	2
151-48190-965	247 -16	2
151-48192-11	247 -10	2
151-48209-950	249 -11	1
151-48225	121 -33	1
151-48314	263 - 1	2
151-48316	263 - 6	4
151-48317	263 - 7	4
151-48318	263 - 9	2
151-48319	263 -18	2
151-48320-5	263 -33	2
151-48320-900	264 - 2	REF
151-48320-900	263 -	2
151-48321	263 -25	2
151-48322	263 -12	
	263 -	6
151-48323	263 -16	2
151-48324	263 -15	2
151-48325	263 - 5	
	263 - 8	8
151-48355-11	265 -53	2
151-48378	264 - 4	2
151-48379	264 - 3	2
151-51008	144 -	
	145 -	2
151-51008-800	144 -	
	145 -	2
151-51009	144 -	
	145 -	2
151-51009-800	144 -	
	145 -	2
151-51014	6 - 2	REF
151-51014	144 -	NP
151-51029	53 -	1
151-51029-3	53 -16	1
151-51030-15	9 -	1
151-51041	53 -17	1
151-51045-30	146 - 1	1
151-51062	144 - 8	
	145 -	4
151-51066-10	146 - 9	1
151-51068	144 -	
	145 -10	2
151-51088	245 -40	1
151-51088-3	245 -	1
151-51091	285 - 6	1
151-52011	130 -26	2
151-52012	130 -25	2
151-52020-5	135 -	1
151-52021-5	135 - 3	1
151-52022	177 - 7	1
151-52025	41 -38	1
151-52026	135 -11	1
151-52027	177 - 3	1
151-52027-3	177 -	1
151-52027-5	177 -	1

PART NUMBER	FIGURE AND INDEX NUMBER	QUANTITY
151-52030	177 - 6	1
151-52031	135 -	1
151-52034	135 - 7	1
151-52035-5	135 -10	1
151-52037	41 -24	1
151-52038	135 - 4	1
151-52043	41 -40	2
151-52045	41 -33	1
151-52046	41 -32	1
151-52056	135 - 5	1
151-52057	41 -23	1
151-52101-1	51 -	1
151-52101-2	51 -	1
151-52103-1	48 - 9	1
151-52103-2	48 -10	1
151-52219	55 -28	1
151-52225	55 -39	1
151-52226-3	55 -31	1
151-52226-4	55 -32	1
151-52227	55 -33	1
151-52228	55 -34	1
151-52229-3	55 -	NP
151-52230-5	55 -30	1
151-52230-7	55 -	1
151-52238	55 -	1
151-52303	126 -	1
151-52303-3	126 -30	1
151-52309	126 -18	1
151-523109	126 -26	1
151-523109-NAVY-L-16	126 -	1
151-52312	51 -16	1
151-52325	126 -21	1
151-52363	125 -	1
151-52402-1	135 -38	REF
151-52402-1	39 -29	1
151-52402-2	39 -	1
151-52404	51 -	1
151-52405-5	130 -35	REF
151-52405-5	38 - 1	1
151-52408	55 -44	1
151-52410-35	135 -39	REF
151-52410-35	67 -33	1
151-52410-36	67 -	1
151-52412-1	136 -20	1
151-52412-2	136 -	1
151-52415	136 -48	2
151-52417	136 -46	2
151-52417-5	136 -	2
151-52418-10	136 -	1
151-52418-9	135 -41	REF
151-52418-9	136 -45	1
151-52419-12	130 -	REF
151-52419-12	136 -	1
151-52419-9	130 -	REF
151-52419-9	136 -	1
151-52422	136 -	2
151-52423-1	136 -	1
151-52423-2	136 -	1
151-52424-1	137 -22	REF
151-52424-1	29 -11	1
151-52424-2	29 -	1
151-52426	135 -19	1
151-52427	86 -29	REF
151-52427	135 -20	1
151-52430	136 -54	2
151-52431	136 -53	2
151-52432	136 -51	2
151-53019-5	119 - 2	1

PART NUMBER	FIGURE AND INDEX NUMBER	QUANTITY
151-53019-6	119 -	1
151-53023	119 - 5	4
151-53028	119 - 4	4
151-53030-2	121 - 9	1
151-53030-5	121 - 8	1
151-53030-7	121 -	1
151-53030-950	121 -	1
151-53030-951	121 -	1
151-53049-10	118 -51	1
151-53051-20	121 -30	1
151-53051-30	121 -	1
151-53054-2	121 -13	1
151-53054-21	121 -12	1
151-53055	121 -16	1
151-53061	121 -15	1
151-53066	302 -14	1
151-53070	124 - 6	2
151-53071	124 -	2
151-53081	140 -68	1
151-53084	119 -10	2
151-53085-1	124 -	1
151-53085-2	124 -	1
151-53085-3	124 -	1
151-53085-4	124 -20	1
151-53085-5	124 -	2
151-53085-6	124 -	2
151-53100	121 -	2
151-53116	307 -43	6
151-53117	307 -42	6
151-53119	55 -45	1
151-53145	119 -	1
151-53160	123 -28	1
151-53162	123 -27	1
151-53164	123 -	2
151-53164-3	123 -30	1
151-53164-5	123 -31	1
151-53169-5	123 -19	2
151-53193-15	119 -16	1
151-53193-7	119 -18	1
151-53193-9	119 -17	1
151-53197	121 -	1
151-53308	272 -53	1
151-53311	272 -61	REF
151-53311	59 - 9	1
151-53331-10	272 -43	1
151-53331-20	272 -47	1
151-53335-87	278 -31	1
151-53335-950	279 - 8	1
151-53335-952	279 - 6	1
151-53335-954	276 - 6	1
151-53338	279 -	2
151-53346-10	273 - 9	1
151-53346-20	273 -	1
151-53346-800	273 -	1
151-53365	275 -	NP
151-53377-30	275 -	1
151-53377-9	275 - 8	1
151-53378	275 - 9	1
151-53431	280 -17	1
151-53435	280 -12	1
151-53436	41 -22	1
151-53481	37 -25	1
151-53488	275 -15	1
151-53491	36 -	1
151-53492	36 -	1
151-53493	36 -56	1
151-53494	40 -27	1
151-53517	272 -44	1

PART NUMBER	FIGURE AND INDEX NUMBER	QUANTITY
151-53519-11	53 -37	1
151-53520	278 -44	1
151-53521	278 -45	1
151-53522	42 -	
	42 -21	6
151-53523-10	278 -	1
151-53528	42 -	
	42 -	6
151-53529	42 -19	5
151-53529-10	42 -	1
151-53530	42 -	
	42 -22	6
151-53535-10	278 -29	1
151-53539-11	42 -	1
151-53539-3	42 -23	1
151-53539-7	278 -51	REF
151-53539-7	42 -20	1
151-53545	280 - 4	1
151-53551-5	276 -	1
151-53552	276 - 1	1
151-53563-3	39 - 8	1
151-53563-4	39 -	1
151-53565	274 - 9	1
151-53565-5	274 -	1
151-53567	71 -52	
	274 -	2
151-53567-3	274 - 8	1
151-53568	42 -	
	42 -	6
151-53573-10	276 -11	REF
	280 -23	
151-53573-10	272 -	1
151-53574	278 -25	2
151-53575-1	278 -	1
151-53575-15	278 -16	1
151-53576	278 -22	1
151-53578	278 -18	1
151-53579	278 -17	1
151-53582	278 -21	1
151-53583	278 -26	2
151-53586	273 -27	1
151-53589	51 -	1
151-53590	53 -	1
151-53591	118 -35	
	273 -32	2
151-53612	272 -25	1
151-53625	278 -41	6
151-53627	278 -36	2
151-53627-10	278 -38	2
151-53628	278 -40	2
151-53630	273 -18	1
151-53635-137	274 - 7	1
151-53657	281 -	1
151-53663	281 -29	1
151-53671	281 -30	2
151-53686-1	182 -30	1
151-54007-20	157 -11	1
151-54009	161 -39	1
151-54010	37 -	
	152 -31	2
151-54018	168 -14	
	169 -13	4
151-54019	168 -	
	169 -	4
151-54019-3	168 -13	
	169 -12	4
151-54019-5	168 -15	
	169 -14	4

PART NUMBER	FIGURE AND INDEX NUMBER	QUANTITY
151-54037-105	157 -	
	158 -	3
151-54037-5	157 -	
	158 -16	3
151-54038	53 -	
	55 -15	3
151-54053-11	36 -55	1
151-54053-12	36 -	1
151-54054	170 -	1
151-54081-3	85 -15	1
151-54083-10	37 -	1
151-54083-5	37 -55	1
151-54084	161 -	1
151-54085	161 -34	1
151-54086	161 -36	1
151-54086-800	161 -	1
151-54087	161 - 4	1
151-54088	71 -30	1
151-54089	71 -29	1
151-54095	165 -40	1
151-54095-10	153 -32	1
151-54096	165 -42	1
151-54098	163 -	AR
151-54102-10	153 -29	
	153 -	2
151-54115	168 -	
	169 -	16
151-54120	170 -18	2
151-54121-10	185 - 1	1
151-54121-800	185 -	1
151-54121-802	185 -	1
151-54122-60	160 - 1	REF
151-54122-60	185 -	1
151-54122-800	185 -	1
151-54122-802	185 -	1
151-54122-804	185 -	1
151-54129-100	160 -21	1
151-54144	30 - 1	REF
151-54144	174 -	NP
151-54145	174 -	1
151-54146	174 -	1
151-54147	174 -	1
151-54147-3	174 - 6	1
151-54161	85 - 2	1
151-54162	85 -14	1
151-54168	160 - 2	1
151-54176-10	163 - 9	1
151-54179	163 - 3	1
151-54190	157 -	1
151-54191	36 -51	1
151-54193-10	58 -26	1
151-54200-11	93 -	1
151-54200-12	93 -	1
151-54211-1	93 - 3	1
151-54211-2	93 -	1
151-54211-3	93 -	1
151-54211-4	93 -	1
151-54211-5	93 -	1
151-54211-6	93 -	1
151-54212	154 -28	1
151-54215	154 -27	1
151-54216	154 -26	1
151-54216-3	154 -	1
151-54216-5	154 -	1
151-54220	170 -	2
151-54220-7	170 -11	2
151-54220-9	170 -12	2
151-54221	154 - 2	1

PART NUMBER	FIGURE AND INDEX NUMBER	QUANTITY
151-54226-1	93 -11	1
151-54226-2	93 -	1
151-54232-1	170 - 2	1
151-54232-2	170 -	1
151-54234-950	65A-16	2
151-54243-1	97 -40	REF
151-54243-1	164 -	1
151-54243-2	165 -	1
151-54244	164 -24	
	165 -20	2
151-54245	164 -26	
	165 -22	2
151-54246	164 -25	
	165 -21	2
151-54247	93 -	2
151-54248	93 - 8	2
151-54248-3	93 -	2
151-54249	93 - 6	2
151-54260-1	170 - 3	1
151-54260-2	170 -	1
151-54261-5	164 -	
	165 -	2
151-54261-7	90 -	
	170 -10	3
151-54267	67 -	1
151-54268	53 -36	1
151-54270-1	14 -10	1
151-54270-2	14 -	1
151-54292	62 -	1
151-54306	67 -	1
151-54315	170 -16	4
151-54315-3	170 -	4
151-54316	170 -	2
151-54316-3	170 -15	2
151-54317	65A-17	2
151-54318	43 -67	1
151-54319	42A- 7	1
151-54323	187 - 7	6
151-54324	187 - 6	6
151-54325	187 - 8	4
151-54325-3	187 -	2
151-54326	187 - 9	6
151-54327-3	154 -25	1
151-54327-5	170 - 9	2
151-54329	154 -29	1
151-54333-1	93 -10	1
151-54333-2	93 -	1
151-54351-10	70 - 6	1
151-54352-10	163 -	1
151-54353-3	163 -	1
151-54353-5	70 - 7	1
151-54354	159 - 3	1
151-54356	55 -17	2
151-54361	152 -15	1
151-54368-950	153 -12	1
151-54370-30	153 -13	1
151-54371-10	90 -17	1
151-54372	65A-	2
151-54380-1	98 -33	1
151-54380-2	98 -	1
151-54391	140 -	1
151-54397-2	185 -10	1
151-54411-20	159 - 1	1
151-54413	82 -15	1
151-54413-10	82 -	1
151-54420	302 -11	1
151-54422-10	156 -	1
151-54422-800	156 - 3	1

PART NUMBER	FIGURE AND INDEX NUMBER	QUANTITY
151-54424	302 - 5	1
151-54425	55 -21	1
151-54426	154 -	
	154 -	
	157 -	
	157 -	
	158 -	
	158 -	
	164 -	
	165 - 5	10
151-54426-3	157 -	
	157 -	2
151-54427-3	157 -37	1
151-54428	289 -	1
151-54428-800	157 -36	1
151-54428-802	173 -	1
151-54433	152 -	
	152 -	
	152 -24	7
151-54526	112 -22	1
151-58010-3	189 -	1
151-58017-3	215 -10	1
151-58027-801	232 -	1
151-58027-802	232 -	1
151-58028-1	234 - 1	1
151-58028-2	234 -	1
151-58029	233 -	2
151-58030	214 - 1	1
151-58033-5	215 - 1	1
151-58035-3	219 -	1
151-58044-1	238 - 1	1
151-58044-2	238 -	1
151-58079-5	189 -12	1
151-58086-3	195 -19	1
151-58131	193 -71	REF
151-58131	51 -58	1
151-58133	157 -29	1
151-58134	157 -30	1
151-58154-3	232 - 7	2
151-58166-3	232 -	2
151-58166-801	232 -23	1
151-58166-802	232 -	1
151-58175	232 - 1	2
151-58176	232 - 3	2
151-58177-800	232 - 2	2
151-58178-800	232 -	2
151-58180	95 -54	REF
151-58180	232 -15	2
151-58184	201 -47	2
151-58194	221 -14	1
151-58208	238 -20	2
151-58228	39A-21	1
151-58229	218 -25	1
151-58230	218 -13	1
151-58231	218 -22	1
151-58233	219 -14	2
151-58234	39A-20	1
151-58235	218 -10	1
151-58236	218 -	1
151-58237	218 -31	REF
151-58237	67 -35	1
151-58238	219 -30	REF
151-58238	218 - 5	
	218 -28	3
151-58239	67 - 4	1
151-58240	218 - 3	1
151-58241	218 - 6	1
151-58242	218 -	1

PART NUMBER	FIGURE AND INDEX NUMBER	QUANTITY
151-58242-3	218 -27	1
151-58246	233 - 2	2
151-58250-1	201 -35	1
151-58250-2	201 -	1
151-58270	218 - 1	1
151-58301	46 -	1
151-58310	189 -17	1
151-58312	5 -22	1
151-58313	189 -28	1
151-58314-3	189 -25	1
151-58318	217 -	2
151-58318-3	217 - 2	2
151-58319	217 - 4	2
151-58320-10	39A-	2
151-58320-5	39A- 4	2
151-58335	194 -	1
151-58346-3	217 - 3	2
151-58366-5	194 - 6	1
151-58366-7	194 -	1
151-58367	194 - 5	1
151-58369	194 - 8	1
151-58372	194 - 4	1
151-58373	190 -	1
151-58373-3	190 -47	1
151-58374	190 -	1
151-58374-3	194 -34	REF
151-58374-3	190 -49	1
151-58375-3	190 -	1
151-58375-5	190 -	1
151-58376	194 -	1
151-58377	51 -	1
151-58380	190 -	1
151-58381	190 -44	1
151-58383	36 -50	1
151-58385	190 -51	REF
151-58385	194 - 7	1
151-58386	53 -	1
151-58386-3	53 -29	1
151-58388	194 -	1
151-58392-3	233 - 1	2
151-58399	51 -	1
151-58408-3	219 - 1	1
151-58409	214 - 2	1
151-58424	196 -18	1
151-58440-800	59 -15	1
151-58468-3	232 - 8	2
151-58497	218 -20	1
151-58499-950	218 -19	1
151-58500	218 -16	1
151-58501	218 -14	1
151-58504	82 -37	1
151-58520	215 - 3	1
151-58524	82 -45	
	215 -12	
	215 -23	
	234 -12	5
151-58524-950	234 -	2
151-58525	82 -46	
	215 -14	
	215 -24	
	234 -14	5
151-58525-950	234 -	2
151-58539	215 - 2	1
151-58561	190 -43	1
151-58562	190 -46	1
151-58562-11	190 -	1
151-58562-811	190 -	1
151-58627-3	92 -38	REF

PART NUMBER	FIGURE AND INDEX NUMBER	QUANTITY
151-58627-3	201 - 3	
151-58627-3	232 -	1
151-58627-4	201 -	REF
151-58627-4	232 -	1
151-58628-5	201 - 5	REF
151-58628-5	234 -	1
151-58628-8	201 -	REF
151-58628-8	234 -	1
151-58628-970	234 -	1
151-58628-980	234 -	1
151-58629-1	201 - 4	REF
151-58629-1	233 -	1
151-58629-2	201 -	REF
151-58629-2	233 -	1
151-58629-801	233 -	1
151-58629-802	233 -	1
151-58630-10	81 -17	REF
	85 -35	
	188 - 2	
151-58630-10	214 -	1
151-58633-9	81 -19	REF
	84 -21	
	91 -29	
	188 - 1	
151-58633-9	215 -	1
151-58635-3	190 - 1	REF
	218 -30	
151-58635-3	219 -	1
151-58641-3	235 - 7	2
151-58641-7	97 -45	REF
	97 -47	
	195 - 2	
	197 - 2	
151-58641-7	235 -	2
151-58644-1	207 - 1	REF
151-58644-1	238 -	1
151-58644-11	238 -	1
151-58644-12	238 -	1
151-58644-5	238 - 3	2
151-58644-9	207 -	REF
151-58644-9	238 -	1
151-58645-3	81 -18	REF
	89 -21	
	90 -78	
	188 - 3	
151-58645-3	216 -	1
151-58673-3	193 -	1
151-58679-15	189 -	1
151-58809-35	201 -33	1
151-58809-37	201 -39	1
151-58809-39	201 -44	1
151-58809-55	233 -13	REF
151-58809-55	201 - 9	1
151-58810-35	196 -50	REF
151-58810-35	201 -	1
151-58810-37	201 -	1
151-58810-39	201 -	1
151-58810-55	201 -	1
151-58825-63	82 -50	1
151-58825-65	82 -49	1
151-58828-15	238 -14	1
151-58828-35	189 -22	1
151-58828-65	188 -17	1
151-58828-67	188 -41	1
151-58828-77	189 -20	1
151-58828-951	188 -35	1
151-58831-31	234 -19	REF
151-58831-31	201 -30	1

PART NUMBER	FIGURE AND INDEX NUMBER	QUANTITY
151-58831-41	233 -15	REF
151-58831-41	201 -15	1
151-58831-43	201 -11	1
151-58831-55	201 -	1
151-58831-65	201 -	1
151-58831-67	201 -	1
151-58831-69	201 -	1
151-58831-841	201 -	1
151-58831-865	201 -	1
151-58831-867	201 -	1
151-61013-11	44 -71	1
151-61013-12	44 -72	1
151-61013-21	44 -	1
151-61013-22	44 -	1
151-61014-11	44 -73	1
151-61014-12	44 -74	1
151-61014-21	44 -	1
151-61014-22	44 -	1
151-61015-11	44 -75	1
151-61015-12	44 -76	1
151-61015-21	44 -	1
151-61015-22	44 -	1
151-61016-1	42 -25	6
151-61016-2	42 -	6
151-61018	42 -26	24
151-61030-3	298 -32	2
151-61030-4	298 -	2
151-61030-5	298 -35	1
151-61030-6	298 -	1
151-61032	297 -	REF
151-61032	298 -	NP
151-61035-1	301 - 1	1
151-61035-2	301 - 2	1
151-61036	301 - 3	2
151-61036-1	301 - 4	1
151-61036-2	301 - 5	1
151-61037-1	301 -26	1
151-61037-2	301 -27	1
151-61038	301 -22	1
151-61038-10	301 -23	1
151-61039	301 -24	1
151-61039-10	301 -25	1
151-61040	301 -28	1
151-61041	301 -29	1
151-61042	301 -11	1
151-61042-10	301 -12	1
151-61043	301 -13	1
151-61043-3	301 -14	1
151-61044	301 -19	1
151-61045	301 -15	1
151-61045-3	301 -16	1
151-61046	301 -17	1
151-61046-3	301 -18	1
151-61047	301 -20	1
151-61048	301 -21	1
151-61050-7	301 -34	1
151-61050-8	301 -36	1
151-61051-1	301 -30	1
151-61051-2	301 -32	1
151-61052-1	301 -38	1
151-61052-2	301 -39	1
151-61053-1	301 -41	1
151-61053-2	301 -42	1
151-61060-3	298 - 8	2
151-61061-3	298 -	2
151-61074	39 - 3	REF
	301A-	
151-61074	301 -	NP

PART NUMBER	FIGURE AND INDEX NUMBER	QUANTITY
151-61074-800	301 -	NP
151-61080-41	298 - 7	1
151-61080-42	298 -	1
151-61082-41	298 - 3	1
151-61082-42	298 -	1
151-61082-841	298 -	1
151-61082-842	298 -	1
151-61084-1	298 - 6	1
151-61084-2	298 -	1
151-61086-1	301A-10	1
151-61086-2	301A-11	1
151-61088-1	301A-16	1
151-61088-2	301A-17	1
151-61089-1	301A-12	1
151-61089-2	301A-13	1
151-61090	33 -17	1
151-61091-1	301A-14	1
151-61091-2	301A-15	1
151-61092-1	301A-18	1
151-61092-2	301A-19	1
151-61093	301A-24	1
151-61094-3	301A-22	1
151-61094-6	301A-23	1
151-61095-1	297 - 9	1
151-61095-2	297 -	1
151-61095-3	297 -10	1
151-61095-4	297 -	1
151-61095-5	297 -11	1
151-61095-6	297 -	1
151-61096	301A-25	1
151-61096-800	301A-	1
151-61097	301A-26	1
151-61098	301A- 8	1
151-61099	301A- 9	1
151-61100-1	301A-20	1
151-61100-2	301A-21	1
151-61100-3	301A-	1
151-61101-1	301A- 1	1
151-61101-2	301A- 2	1
151-61102	301A- 3	1
151-61103	301A- 5	1
151-61104	301A- 4	1
151-61105	297 -37	4
151-61108	301A- 6	1
151-61109	301A- 7	1
151-61110-801	297 -	
	297 -	5
151-61110-802	297 -	
	297 -	5
151-61110-803	297 -	2
151-61110-804	297 -	2
151-61110-951	297 -	4
151-61172	300 -12	2
151-61180-1	300 -	1
151-61180-2	300 -	1
151-61180-3	300 - 1	1
151-61180-4	300 -	1
151-61196	300 -13	4
151-63002-801	311 -	NP
151-63002-840	307 - 1	REF
151-63002-840	311 -	NP
151-63002-850	311 -	NP
151-63015-19	311 -20	2
151-63015-41	311 -	1
151-63015-42	311 -	1
151-63015-841	311 -19	1
151-63015-842	311 -	1
151-63016	311 -21	2

PART NUMBER	FIGURE AND INDEX NUMBER	QUANTITY
151-63017	311 -22	2
151-63018	311 -25	2
151-63019	311 -26	2
151-66018	306 -12	
	307 -	1
151-66019	306 - 1	1
151-66020	306 - 3	1
151-66021	306 - 4	1
151-66022	306 - 5	1
151-66023	306 -	1
151-66023-3	306 - 6	1
151-66023-5	306 - 9	25
151-66023-7	306 - 8	23
151-66023-9	306 - 7	2
151-66024-10	45 -	1
151-68004-24	309 -17	16
151-68004-26	309 -18	16
151-68004-5	309 -	8
151-68008	309 -53	8
151-68010	309 -59	64
151-68029	310 - 4	16
151-68030	310 - 3	16
151-68031	310 - 2	16
151-68032-3	310 -	8
151-68032-4	310 -	8
151-68041	309 -43	8
151-71012-802	29 - 2	REF
151-71012-802	291 -	1
151-71013	291 -	1
151-71013-8	291 -18	1
151-71013-9	291 -17	1
151-71014-954	291 -14	2
151-71023-5	289 -	2
151-71025	289 -	2
151-71026-800	71 -55	1
151-71037-10	36 -34	1
151-71044-16	288 -36	1
151-71044-18	288 -37	1
151-71044-20	290 -15	REF
151-71044-20	291 -	1
151-71044-21	291 - 1	1
151-71044-4	291 -21	REF
151-71044-7	290 - 1	1
151-71044-800	290 -	1
151-71048	288 -	1
151-71054-11	288 -	3
151-71054-801	288 -20	3
151-71055	290 - 7	1
151-71069	289 -25	1
151-71071	62 -19	1
151-71080	289 -	4
151-71081	289 -	1
151-71082	289 - 9	1
151-71084	289 -32	1
151-71086	289 -33	3
151-71088	289 -24	1
151-71090-800	289 -15	1
151-71093	161 -	1
151-71093-3	161 - 2	1
151-71094	161 - 3	1
151-71097-12	289 -23	1
151-71098	289 -	1
151-71098-3	289 -26	1
151-71098-5	289 -27	1
151-71099	289 -36	1
151-71100	291 -16	2
151-71117	289 -28	3
151-73073	318 - 6	

PART NUMBER	FIGURE AND INDEX NUMBER	QUANTITY
151-73318-101	287 -19	1
151-73318-103	287 -15	1
151-73318-105	287 -17	1
151-73318-107	287 -38	1
151-73318-117	287 -44	1
151-73318-119	287 -10	1
151-73318-121	287 -13	1
151-73318-3	287 -35	1
151-73318-7	287 -31	2
151-73318-951	287 -33	1
151-73318-953	287 -36	1
151-73318-957	287 -20	1
151-73318-959	287 -21	1
151-73318-961	287 -34	1
151-73318-963	287 -11	1
151-73318-965	287 -40	1
151-73318-967	287 -44C	1
151-73318-969	287 -44A	1
151-73318-97	287 -23	1
151-73318-99	287 -24	1
151-73323-3	142 -10	1
151-73329-1	287 - 4	4
151-73329-9	287 - 3	
	287 -	6
151-73329-950	287 -	2
151-73329-952	287 - 2	2
151-73331	287 -	2
151-73332	287 - 1	4
151-73501-70	36 -	REF
151-73501-70	302 -	NP
151-73501-800	302 -	NP
151-73507	302 -27	1
151-73507-5	302 -28	1
151-73507-6	302 -	1
151-73507-7	302 -29	1
151-73507-800	302 -	1
151-73509	302 -32	1
151-73512-3	302 - 9	1
151-73512-4	302 -	1
151-73512-5	302 -10	1
151-73553	302 -33	1
151-74053	293 -28	2
151-74053-3	293 -	2
151-74081	292 -	1
151-74081-3	292 -36	1
151-74081-5	292 -39	1
151-74083	292 -	1
151-74083-3	292 -40	1
151-74108	292 -37	1
151-89001-5	307 - 2	REF
151-89001-5	310 -	NP
151-89001-805	310 -	NP
15117	201 -37	2
152-00029	1 -	NP
152-13027-3	62 -81	REF
152-13027-3	3 - 4	1
152-13027-4	63 -64	REF
152-13027-4	3 -	1
152-13028-7	2 -33	REF
	62 -82	
152-13028-7	3 -33	1
152-13028-8	63 -65	REF
152-13028-8	3 -	1
152-14089-10	10 -	1
152-14089-7	10 -	1
152-14089-8	10 -	1
152-14089-9	311 -35	REF
152-14089-9	10 -18	1

PART NUMBER	FIGURE AND INDEX NUMBER	QUANTITY
152-14124-15	311 -36	REF
152-14124-15	9 - 3	1
152-14124-16	9 -	1
152-14176-1	310 -19	REF
152-14176-1	14 -	
	14 -	
	14 -	3
152-14176-2	14 -	
	14 -	
	14 -	3
152-14176-3	14 -47	
	14 -54	
	14 -66	3
152-14176-4	14 -	
	14 -	
	14 -	3
152-14180-1	310 -22	REF
152-14180-1	11 -19	1
152-14180-2	11 -	1
152-18020-3	23 -	
	23 -	4
152-18020-5	23 -23	
	23 -	4
152-18020-7	23 -	
	23 -	4
152-18020-9	23 -22	
	23 -	4
152-31101-115	45 -	1
152-31101-801	42 - 2	REF
152-31101-801	45 -	1
152-31102-40	45 - 1	REF
152-31102-40	48 -	1
152-31104	48 -	REF
152-31104	49 -	1
152-31104-11	49 -22	1
152-31104-21	49 -	1
152-31104-3	49 - 1	1
152-31104-5	49 - 2	1
152-31104-6	49 -	1
152-31104-7	49 -16	1
152-31104-9	49 -19	1
152-31112	44 -66	1
152-31121-3	90 - 1	1
152-31138-19	55 - 9	1
152-31138-21	55 -	1
152-31138-23	55 -	1
152-31138-25	55 - 4	1
152-31138-27	55 - 6	1
152-31138-28	55 - 7	1
152-31138-29	55 -10	1
152-31138-300	37 -57	REF
	51 - 1	
	302 -35	
152-31138-300	55 -	1
152-31138-310	55 -	1
152-31138-33	55 -11	1
152-31138-35	55 -13	1
152-31138-43	55 - 8	1
152-31138-47	55 -14	1
152-31138-5	55 -12	1
152-31138-55	55 - 1	1
152-31138-57	55 -	1
152-31138-59	55 -	1
152-31138-6	55 -	1
152-31138-800	55 -	1
152-31139-1	40 -	1
152-31139-2	40 -	1
152-31152-10	51 -	1

PART NUMBER	FIGURE AND INDEX NUMBER	QUANTITY
152-31159-1	40 -	1
152-31159-2	40 -	1
152-31176-3	47 -70	1
152-31178-3	298 -	1
152-31178-4	298 -	1
152-31178-5	298 -	1
152-31178-6	298 -	1
152-31178-7	298 -	1
152-31178-8	298 -	1
152-31180-19	47 -35	1
152-31180-20	47 -36	1
152-31186-10	48 -	1
152-31186-7	49 -18	1
152-31186-9	48 -43	1
152-31189-3	298 -	1
152-31189-4	298 -	1
152-31379-11	62 -83	REF
152-31379-11	74 -49	1
152-31379-12	63 -66	REF
152-31379-12	74 -	1
152-31379-13	74 -	1
152-31379-14	74 -	1
152-31405-11	37 -	1
152-31405-13	37 -	1
152-31405-20	37 -	1
152-31407-100	37 -26	1
152-31407-11	37 -	1
152-31407-13	37 -	1
152-31407-15	37 -	1
152-31407-17	37 -27	1
152-31407-19	37 -	2
152-31407-21	37 -	1
152-31407-23	37 -28	1
152-31407-25	37 -	1
152-31407-27	37 -	1
152-31407-31	37 -	1
152-31407-33	37 -	1
152-31407-5	37 -	1
152-31407-7	37 -	1
152-31407-9	37 -	1
152-31411	38 -21	1
152-31412-801	36 -	1
152-31412-803	36 -52	1
152-31415-11	37 -	1
152-31415-15	37 -10	1
152-31415-17	37 - 9	1
152-31415-18	37 -	1
152-31415-40	37 -	1
152-31415-41	37 -	1
152-31415-5	37 -	1
152-31415-9	37 -	1
152-31420-1	37 -	1
152-31420-2	37 -	1
152-31420-3	37 -46	1
152-31420-4	37 -	1
152-31420-5	37 -47	2
152-31422	37 -	2
152-31423	37 -53	1
152-31428-1	38A-20	1
152-31428-2	38A-	1
152-31429	37 -	1
152-31436-10	67 -	1
152-31484-1	40 -	1
152-31484-2	40 -	1
152-31486-1	40 -	1
152-31486-2	40 -	1
152-31519-3	56 -	6
152-31666	37 -45	1

PART NUMBER	FIGURE AND INDEX NUMBER	QUANTITY
152-31801-40	36 -	REF
	70 -	
	274 -	
152-31801-40	68 -	NP
152-31801-801	68 -	NP
152-31802-21	71 -61	1
152-31802-23	71 -56	1
152-31802-25	71 -63	2
152-31802-27	71 -	2
152-31802-29	71 -60	1
152-31802-33	71 -51A	1
152-31802-34	71 -51B	1
152-31802-37	71 -64	2
152-31802-39	71 -62	1
152-31802-43	71 -66	2
152-31802-45	71 -57	1
152-31802-60	70 - 1	REF
152-31802-60	71 -	1
152-31802-7	71 -59	1
152-31802-803	71 -	1
152-31802-805	71 -	1
152-31802-807	71 -	1
152-31802-951	71 -	1
152-31802-953	71 -	1
152-31802-957	71 -	1
152-31802-960	71 -	
152-31803-107	71 - 1	1
152-31803-108	71 - 2	1
152-31803-123	71 -34	1
152-31803-33	71 -21	1
152-31803-34	71 -	1
152-31803-500	71 -	1
152-31803-51	71 -38	1
152-31803-57	71 -40	1
152-31803-59	71 -41	1
152-31803-61	71 -19	1
152-31803-62	71 -	1
152-31803-800	71 -	1
152-31803-805	71 -	1
152-31803-807	71 -	1
152-31803-823	71 -	1
152-31803-851	71 -	1
152-31803-955	71 -20	2
152-31804-17	71 -23	2
152-31804-30	71 -	2
152-31804-40	71 -22	1
152-31804-800	71 -	1
152-31805-11	38A- 9	1
152-31805-12	38A-	1
152-31806-10	70 -69	REF
152-31806-10	71 -	1
152-31806-20	71 -	1
152-31808	71 -	2
152-31809-5	70 -64	
	71 -	16
152-31809-7	70 -	
	71 -25	16
152-31810	37 -	2
152-318101	68 -36	1
152-318101-10	38 -27	1
152-318102	68 -	1
152-318102-10	38 -26	1
152-318106	70 -67	REF
152-318106	68 -44	2
152-318106-3	68 -	2
152-318107-10	68 -24	1
152-318107-5	68 -	1
152-318108	68 -26	1

PART NUMBER	FIGURE AND INDEX NUMBER	QUANTITY
152-318108-3	68 -	1
152-318109-10	68 -33	1
152-318113	71 -39	1
152-31812-3	71 -53	1
152-31812-800	71 -	1
152-31812-801	71 -	1
152-31812-803	71 -	
152-318121-3	70 -56	1
152-318122-3	70 -58	1
152-318123	70 -	
	70 -59	2
152-318127	38 -	1
152-31813	71 -24	2
152-318130-20	70 -	1
152-31814-20	71 -35	1
152-31815-1	71 -44	1
152-31815-11	71 -	1
152-31815-12	71 -	1
152-31815-2	71 -45	1
152-31816	71 -46	1
152-31816-10	71 -	1
152-31817	71 -	1
152-31817-10	71 -	1
152-31817-800	71 -	1
152-31818-30	70 -	1
152-31818-5	70 -	1
152-31819-10	70 - 2	1
152-31820	70 -	1
152-31820-3	70 -16	1
152-31821	70 -	1
152-31821-3	70 -10	1
152-31822	70 - 4	2
152-31823	70 -	1
152-31824	70 -14	1
152-31826-10	70 -20	1
152-31827	70 -19	1
152-31828	70 -18	1
152-31829-3	70 -22	1
152-31830	70 -21	2
152-31831	70 - 5	1
152-31832	70 - 9	1
152-31833	37 -32	2
152-31834	37 -52	1
152-31837	70 -23	1
152-31838-5	70 -	1
152-31838-7	70 -15	1
152-31839-11	38 -14	1
152-31839-801	38 -	1
152-31839-803	38 -	1
152-31840	38 -13	1
152-31841-20	70 -66	REF
152-31841-20	38 -12	1
152-31841-9	38 -	1
152-31842	38 -15	1
152-31843	70 -52	1
152-31844	70 -53	1
152-31845	70 -51	2
152-31848	70 -29	1
152-31850-952	70 -32	1
152-31867	68 -45	REF
	69 -46	
152-31867	55 -19	1
152-31868-800	55 -	1
152-31870	68 -48	REF
	68 -50	
152-31870	38 -11	1
152-31870-3	38 -	1
152-31870-800	38 -	1

PART NUMBER	FIGURE AND INDEX NUMBER	QUANTITY
152-31870-950	38 -	1
152-31871-15	70 -	1
152-31871-17	70 -	1
152-31871-19	70 -	1
152-31871-21	70 -	1
152-31871-23	70 -37	1
152-31871-25	70 -42	1
152-31873	37 -	1
152-31874	37 -48	1
152-31875	37 -	1
152-31876	68 -40	1
152-31877-3	68 -37	1
152-31878-10	38 -29	
	68 -39	2
152-31879	70 -57	1
152-31880-20	68 - 9	
	69 - 8	2
152-31880-5	68 -	
	69 -	2
152-31881	68 -42	
	69 -43	2
152-31881-3	68 -	
	69 -	2
152-31883	70 -44	1
152-31884-20	70 -39	1
152-31886-20	70 -31	1
152-31890-1	71 -	1
152-31890-2	71 -	1
152-31891-1	71 -	1
152-31891-2	71 -16	1
152-31892	71 -42	1
152-31892-800	71 -	1
152-31893	38 - 4	2
152-31894-20	70 -33	1
152-31895	37 -50	1
152-31895-10	37 -	1
152-31895-3	37 -	1
152-31895-5	37 -	1
152-31895-7	37 -	1
152-31895-9	37 -	1
152-31896	68 -41	1
152-31898	68 -27	1
152-34121-3	43 - 5	1
152-34121-5	43 -25	1
152-34121-7	84 -19	REF
	86 -32	
152-34121-7	43 -	1
152-34121-9	84 -20	REF
152-34121-9	43 -	1
152-34161	81 -20	REF
	81 -22	
	85 -36	
152-34161	90 - 3	1
152-34161-3	90 -	1
152-34186-20	86 -30	REF
152-34186-20	43 -39	1
152-34512-7	91 -15	1
152-43039	112 - 7	1
152-48083	250 -11	1
152-51062-20	41 -21	1
152-52007	135 -34	2
152-52008	135 -33	2
152-52102-3	127 - 3	1
152-52102-5	127 -	1
152-52104-5	127 - 2	1
152-53080-10	53 -	1
152-53080-13	53 -25	1
152-53080-15	53 -26	1

PART NUMBER	FIGURE AND INDEX NUMBER	QUANTITY
152-53080-17	53 -28	1
152-53080-19	53 -	2
152-53080-3	53 -24	1
152-53080-7	53 -	1
152-53082	51 -	1
152-53336-21	280 - 7	1
152-53336-3	280 - 8	1
152-53336-33	280 -21	2
152-53336-47	279 -	1
152-53336-5	280 - 5	1
152-53336-7	275 - 6	1
152-53336-9	279 -23	1
152-53408	71 -37	1
152-53520	38A- 1	1
152-53521	38A- 2	1
152-53522	38A- 7	
	278 -24	2
152-53523	280 - 6	1
152-53524	38A- 3	1
152-53525-5	38A- 6	
	278 -23	2
152-53527	38A- 4	1
152-53528-29	38A-	1
152-53528-51	280 -24	REF
152-53528-51	38A-	1
152-54034	158 -	1
152-54201-30	154 - 1	REF
	170 - 1	
152-54201-30	187 -	4
152-54201-60	93 - 2	REF
152-54201-60	187 -	1
152-54201-70	93 -	REF
152-54201-70	187 -	1
152-54201-9	187 -	6
152-54201-952	187 -11	6
152-54203	187 - 1	6
152-54204	187 -12	6
152-54208	174 -	
	187 - 3	
	273 -	14
152-61174-5	300 - 6	2
152-61175-5	300 - 7	2
152-68012-3	309 - 1	8
152-71022	289 -19	1
152-71022-802	289 -	
152-71039	289 -21	1
152-71039-800	289 -	
152-73521	302 - 8	1
153-487150-29	7 -17	2
153-487150-31	196 -	
	196 -	3
155-S11-6	208 -24	
	210 -52	2
155-S2-12	308 -26	1
155-S2-6D	64 - 9	
	64 -	
	198 -34	
	198 -35	
	199 - 2	
	199 -21	7
155-S2-6S	64 -	
	198 -	
	198 -	
	199 -	
	199 -	5
155-S2-8D	195 -37	
	195 -46	2
155-S4-12D	64 -13	2

PART NUMBER	FIGURE AND INDEX NUMBER	QUANTITY
155-S4-8D	64 -11	2
155-S5-12	308 -25	1
155-S5-6	308 -36	1
155-S9-8	308 -37	1
155-25-12D	104 -	
	104 -	
	105 -	
	105 -	4
155-25-6D	104 -	
	104 -	
	105 -	4
155-25-8	207 -	
	207 -	
	208 -	
	208 -	
	209 -	
	209 -	6
155-25-8D	104 -	
	104 -	
	105 -	
	105 -	4
1563-16	314 -	
1563-20	314 -	
1563-24	314 -	
1563-32	314 -	
1563-40	314 -	
1563-48	314 -	
157-14029-11	6 -32	4
157-14029-3	6 -31	2
157-14029-9	6 -33	2
157-16008	6 -45	REF
157-318101	16 -	
	19 -35	16
157-49015	305 -13	2
157-49018	305 -20	2
157-49019	305 -12	2
157-49058	305 -34	2
157-52481	135 -14	2
157-53481	272 -40	1
157-54089-13	178 -10	1
157-58413	64 -16	
	198 -	2
157-58414	64 -	
	198 -	2
157-58532	198 -	1
157-63006-10	311 -	2
157-63006-5	311 -	2
157-68060	310 -11	16
157-68062	310 -10	16
157-71041	288 - 9	2
157-71041-3	288 -	2
157-74010	293 -	1
157-74011	293 -	1
157-74012	293 -23	1
157-74013	293 -17	1
157-74017	293 -18	1
157-74018	293 -19	1
157-74019	293 -24	1
157-74020	293 -	2
157-74024-1	293 -13	1
157-74024-2	293 -	1
157-74041	293 -40	1
157-74046	293 -43	1
1582-10	314 -	
1582-4	314 -	
1582-5	314 -	
1582-8	314 -	
159-42074	34 -43	1

PART NUMBER	FIGURE AND INDEX NUMBER	QUANTITY
159-48167	114 -	
	115 -20	
	157 -	
	157 -	
	158 -	
	158 -	
	186 - 3	15
159-52117-17	125 -	2
159-52220-11	125 -	2
159-52220-5	125 -	2
159-53353	67 -28	1
159-61036	298 -10	
	298 -	
	298 -	6
1595-5	314 -	
16	123 -13	1
160-54259-3	164 -	
	165 -15	2
161-10005	2 - 3	REF
161-10005	5 -	1
161-10005-10	5 - 4	1
161-10005-11	5 -	1
161-10005-111	5 -	1
161-10005-112	5 -	1
161-10005-113	5 -50	1
161-10005-114	5 -51	1
161-10005-115	5 -53	4
161-10005-117	5 -54	1
161-10005-118	5 -	1
161-10005-119	5 -55	1
161-10005-120	5 -	1
161-10005-121	5 -	1
161-10005-123	5 -56	
	5 -	1
161-10005-125	5 -58	1
161-10005-127	5 -59	1
161-10005-129	5 -60	1
161-10005-13	5 -12	1
161-10005-130	5 -	1
161-10005-14	5 -	1
161-10005-143	5 -31	1
161-10005-145	5 -30	1
161-10005-147	5 -	1
161-10005-149	5 -33	1
161-10005-151	5 -32	1
161-10005-17	5 -14	1
161-10005-18	5 -	1
161-10005-19	5 -15	1
161-10005-23	5 -16	1
161-10005-24	5 -	1
161-10005-25	5 -18	1
161-10005-26	5 -	1
161-10005-29	5 -20	1
161-10005-3	5 - 1	1
161-10005-31	5 -	4
161-10005-33	5 -21	2
161-10005-35	5 -	2
161-10005-36	5 -19	1
161-10005-37	5 - 2	1
161-10005-39	5 -13	1
161-10005-43	5 -17	1
161-10005-45	5 -	2
161-10005-53	5 -34	1
161-10005-55	5 -29	1
161-10005-57	5 -	
	5 -	3
161-10005-59	5 -	1
161-10005-67	5 -24	1

PART NUMBER	FIGURE AND INDEX NUMBER	QUANTITY
161-10005-68	5 -	1
161-10005-69	5 -25	2
161-10005-70	5 -26	2
161-10005-73	5 -27	1
161-10005-74	5 -	1
161-10005-75	5 -28	1
161-10005-76	5 -	1
161-10005-79	5 -46	2
161-10005-800	5 -	1
161-10005-83	5 -	8
161-10005-85	5 -	3
161-10005-87	5 -10	2
161-10005-9	5 - 3	1
161-10005-93	5 -11	2
161-10005-95	5 - 8	1
161-10005-951	5 -57	1
161-10005-955	5 -	1
161-10005-96	5 -	1
161-10005-97	5 - 9	1
161-10005-99	5 -23	2
161-17170	20 -63	6
161-23410	29 -40	1
161-24404	30 -34	1
161-31006	36 -33	1
161-31051	32 -12	1
161-31226-1	36 -38	2
161-31226-2	36 -	2
161-31247-2	63 -35	1
161-31312-1	73 -23	1
161-31312-2	73 -	1
161-31495	45 -	1
161-31495-11	45 -	1
161-31495-13	45 -	2
161-31495-3	45 -14	1
161-31495-5	45 -	1
161-31495-7	45 -	1
161-31495-9	45 -	1
161-31500-1	45 -15	1
161-31500-2	45 -16	1
161-31689-1	73 -24	1
161-31689-2	73 -	1
161-31715	35 -28	1
161-31717	35 -27	1
161-31835	70 -27	1
161-31836	70 -	1
161-33548	97 -13	2
161-33548-3	97 -	2
161-42026-801	108 -63	1
161-43201	115 -32	1
161-48250-11	264 - 1	REF
161-48250-11	265 -	2
161-48250-31	265 -	2
161-48250-902	265 -	4
161-48250-904	265 -	4
161-48250-906	265 -	4
161-48251	265 - 1	REF
161-48251	266 -	2
161-48251-51	266 -	2
161-48252	265 -	2
161-48252-91	265 -	2
161-48253	265 -41	2
161-48253-51	265 -	2
161-48254	265 -66	2
161-48255	265 -	2
161-48257	265 -	4
161-48259	265 -33	2
161-48259-31	265 -	2
161-48261-950	264 -23	2

PART NUMBER	FIGURE AND INDEX NUMBER	QUANTITY
161-48261-952	264 -	2
161-48261-954	264 -	
	268 -	4
161-48261-956	264 -	
	268 -	4
161-48266	265 -63	2
161-48267	265 -59	2
161-48271-3	265 -20	2
161-48271-5	265 -21	2
161-48275-3	265 -29	4
161-48275-5	265 -30	4
161-48277	266 -11	2
161-48277-11	266 -	2
161-48278	265 -42	2
161-48279	265 -44	2
161-48280	266 -12	2
161-48281	265 -43	2
161-48282	266 -13	2
161-48283	266 - 3	
	268 - 4	4
161-48284	266 - 2	
	268 -	4
161-48285	266 - 1	
	268 -	4
161-48286	266 -27	
	268 - 2	
	268 -21	6
161-48298	265 -	2
161-48298-10	265 - 9	2
161-48298-19	265 - 2	2
161-48298-3	265 - 6	2
161-48298-9	265 - 8	2
161-48298-950	265 -	2
161-48312	265 -13	4
161-48313	265 -14	4
161-48314-3	265 -12	4
161-48314-5	265 -	4
161-48315-1	265 -	2
161-48315-2	265 -	2
161-48316	265 -	4
161-48317	265 -	4
161-48319-1	265 -17	2
161-48319-2	265 -18	2
161-48321	265 -52	2
161-48322	265 -40	
	265 -48	
	266 -28	
	268 - 3	
	268 -22	10
161-48323	265 -25	4
161-48326	265 -65	2
161-48327	265 -	2
161-48329	265 -69	2
161-48333	265 -	2
161-48334	265 -	2
161-48337	265 -55	2
161-48338	265 -58	2
161-48339	265 -	
	266 -23	4
161-48341-51	264 -17	2
161-48341-801	267 - 3	2
161-51801-53	150 -58	REF
161-51801-53	149 -39	1
161-51801-67	150 -32	1
161-51801-69	285 -12	1
161-51801-950	149 -24	1
161-51801-951	150 -23	1
161-51801-952	149 -25	1

PART NUMBER	FIGURE AND INDEX NUMBER	QUANTITY
161-51801-954	149 -21	1
161-51801-955	150 -21	1
161-51801-956	149 -23	1
161-51801-957	285 -13	1
161-51801-959	285 -	1
161-51801-962	150 -20	1
161-51801-979	149 -	1
161-51801-981	149 -	1
161-51801-983	149 -	1
161-51801-985	149 -	1
161-52008-1	29 -	1
161-52008-2	29 -	1
161-52403	136 -27	2
161-52404	136 -31	4
161-53062-1	123 -14	1
161-53062-2	123 -	1
161-53064-800	121 -37	1
161-53064-810	121 -	1
161-53064-950	121 -	1
161-53064-956	121 -	1
161-53064-958	121 -	1
161-53065-30	121 -	1
161-54029-10	179 -	1
161-54029-13	179 -	1
161-54029-5	179 - 4	1
161-54034	4 -	2
161-54036	40 -29	1
161-54037-1	175 -	1
161-54037-4	175 -	1
161-54037-801	175 -	1
161-54037-802	175 -	1
161-54038-1	175 - 1	1
161-54038-104	175 -10	1
161-54038-4	175 -	1
161-54039-800	175 - 9	2
161-54042	155 - 8	1
161-54045	170 -	1
161-54049	71 -33	1
161-54057	158 -52	1
161-54057-800	158 -	1
161-54058	180 -14	1
161-54093	161 - 8	1
161-54094	161 - 7	1
161-54098	158 -	40
161-54098-10	158 -	360
161-54108	163 -	1
161-54110	155 -	1
161-54113-3	152 -	
	152 -	
	152 -25	4
161-54114	152 -21	2
161-54115-1	39 -49	1
161-54115-2	39 -	1
161-54116-20	163 -22	1
161-54116-800	163 -	1
161-54117-11	152 -	1
161-54118-31	152 -22	1
161-54119	152 -20	
	152 -	3
161-54119-801	152 -	1
161-54127	39 -	1
161-54132	180 -24	1
161-54136	168 -18	
	169 -17	4
161-58095	226 -	1
161-58106-1	190 -53	REF
161-58106-1	40 - 4	1
161-58106-2	40 -	1

PART NUMBER	FIGURE AND INDEX NUMBER	QUANTITY
161-58116-3	217 - 1	1
161-58116-4	217 -	1
161-58117	188 -	
	211 -	
	228 -10	3
161-58121	217 - 9	2
161-58122	217 -10	2
161-58123-1	40 - 7	1
161-58123-2	40 -	1
161-58172	39A- 6	2
161-58173-1	39A- 5	1
161-58173-2	39A-	1
161-58174-3	217 -	1
161-58174-4	217 -	1
161-58234	226 - 2	1
161-58235	226 - 3	1
161-58236-3	226 - 8	1
161-58236-5	226 - 1	1
161-58247	196 -51	REF
161-58247	56 -19	1
161-58251	56 -20	1
161-58257	221 -17	1
161-58258	221 -	1
161-58258-3	221 -18	1
161-58259	233 - 5	2
161-58265	219 - 4	2
161-58266	219 - 2	2
161-58267	219 -	2
161-58267-3	219 - 9	2
161-58268	219 - 8	2
161-58803-951	188 -24	1
161-58805-15	188 -19	1
161-58827	221 -11	1
161-61033	298 -	REF
161-61033	300 -	NP
161-61056	298 -12	2
161-61060	298 -14	2
161-61070	298 -	2
161-66001	1 -11	REF
161-66001	306 -	NP
161-66016	45 -	1
161-66017	45 -10	1
161-67006	305 - 9	2
161-67011	305 -35	2
161-67013	305 - 7	2
161-68006	309 - 2	8
161-68035	310 -	16
161-68035-5	310 - 9	16
161-68036	310 - 8	16
161-68703	262 -49	2
161-68704	262 -46	2
161-68705	262 -48	2
161-68706	262 -50	2
161-71006	296 -	2
161-71008-800	288 -	1
161-71008-804	288 -	1
161-71008-952	288 -15	1
161-74034	289 -14	1
161-74034-3	289 -	1
161-74034-5	289 -	1
161-74035	289 -	1
161-74038	115 - 7	1
161-74040	115 -11	1
161-74042	115 -16	1
161-74043	115 -18	1
161-74044	58 -30	1
161-74045	289 -58	REF
161-74045	296 - 1	1

PART NUMBER	FIGURE AND INDEX NUMBER	QUANTITY
161-74046	296 -16	1
161-74046-10	296 -19	1
161-74048-800	296 - 4	1
161-74049-800	296 -	1
161-74109	292 -15	1
1617C2	140 -57	1
165-14034-3	14 -17	1
165-14034-5	14 -18	1
165-14035	14 -	1
165-14035-3	14 -	1
165-14035-5	14 -	1
165-14036-1	14 -	1
165-14036-2	14 -19	1
165-14036-3	14 -	1
165-14036-4	14 -	1
165-14036-5	14 -	1
165-14036-6	14 -	1
165-14056-1	11 -25	1
165-14056-2	11 -	1
165-14056-3	11 -	1
165-14056-4	11 -	1
165-14059-13	7 - 5	1
165-14059-14	7 -	1
165-14059-15	7 - 9	2
165-14059-21	7 -	1
165-14059-22	7 -	1
165-14059-5	7 - 8	2
165-14059-7	7 - 6	2
165-14059-9	7 - 7	4
165-14066-15	14 -	1
165-14066-16	14 -	1
165-14066-23	14 - 2	2
165-14066-3	14 - 1	1
165-14066-4	14 -	1
165-14066-51	14 -	1
165-14066-52	14 -	1
165-14068-1	14 -	1
165-14068-2	14 -	1
165-14068-3	14 - 8	1
165-14068-4	14 -	1
165-14068-5	14 -	1
165-14068-6	14 -	1
165-14075-1	14 -12	1
165-14075-2	14 -	1
165-14107-1	8 -15	1
165-14107-2	8 -	1
165-14199	22 -14	1
165-14200	22 -13	1
165-14239-1	12 -33	1
165-14239-2	12 -	1
165-14325	10 -35	
	10 -40	
	10 -47	6
165-14339-1	15 - 2	
	19 -	2
165-14339-2	15 -	
	19 -	2
165-14393-11	13 -	1
165-14393-12	13 -	1
165-14393-13	13 -	1
165-14393-14	13 -	1
165-14393-3	13 -27	1
165-14393-4	13 -	1
165-14393-5	13 -	1
165-14393-6	13 -	1
165-14394-1	13 -29	1
165-14394-2	13 -	1
165-14394-41	13 -	1

PART NUMBER	FIGURE AND INDEX NUMBER	QUANTITY
165-14394-42	13 -	1
165-14413-1	8 -14	
	8 -	1
165-14413-2	8 -	
	8 -	1
165-14413-801	8 -	1
165-14413-802	8 -	1
165-14479-1	9 -11	1
165-14479-2	9 -	1
165-14488-1	9 -12	1
165-14488-2	9 -	1
165-14490-1	11 -24	1
165-14490-2	11 -	1
165-14491-1	9 -48	REF
165-14491-1	11 -23	1
165-14491-2	11 -	1
165-14493-3	14 -	2
165-14494-1	14 -24	1
165-14494-2	14 -	1
165-14497-1	9 -14	1
165-14497-2	9 -	1
165-14503-2	171 - 1	2
165-14506-1	9 -15	1
165-14506-2	9 -	1
165-14515-1	9 -16	1
165-14515-2	9 -	1
165-14524-1	9 -18	1
165-14524-2	9 -	1
165-14533-1	9 -20	1
165-14533-2	9 -	1
165-14542-1	9 -21	1
165-14542-2	9 -	1
165-14560-101	9 -27	1
165-14560-102	9 -	1
165-14560-805	9 -28	1
165-14560-806	9 -	1
165-14608-1	7 -20	1
165-14608-2	7 -	1
165-14608-801	7 -	1
165-14608-802	7 -	1
165-14609-1	7 -21	1
165-14609-2	7 -	1
165-14628-1	9 -13	1
165-14628-2	9 -	1
165-14652-1	9 -17	1
165-14652-12	9 -	1
165-14662-1	9 -19	1
165-14662-12	9 -	1
165-14670-1	9 - 9	1
165-14670-2	9 -	1
165-14685-1	9 -22	1
165-14685-2	9 -	1
165-16001-1	6 - 4	REF
165-16001-1	24 -	1
165-16001-2	6 -	REF
165-16001-2	24 -	1
165-16001-805	24 -	
165-16001-806	24 -	
165-16001-807	24 -	1
165-16001-808	24 -	1
165-16001-811	24 -	
165-16001-812	24 -	
165-16001-813	24 -	
165-16001-814	24 -	
165-16001-815	24 -	
165-16001-816	24 -	
165-16001-903	24 -	
165-16001-904	24 -	

PART NUMBER	FIGURE AND INDEX NUMBER	QUANTITY
165-16002-1	24 -	1
165-16002-10	24 -	1
165-16002-11	24 -74	1
165-16002-12	24 -	1
165-16002-13	24 -75	2
165-16002-15	24 -76	1
165-16002-2	24 -	1
165-16002-21	24 -	4
165-16002-23	24 -57	1
165-16002-24	24 -	1
165-16002-25	24 -56	1
165-16002-26	24 -	1
165-16002-27	24 -54	1
165-16002-28	24 -	1
165-16002-29	24 -55	1
165-16002-3	24 -77	1
165-16002-30	24 -	1
165-16002-31	24 -52	1
165-16002-32	24 -	1
165-16002-33	24 -53	1
165-16002-34	24 -	1
165-16002-35	24 -	1
165-16002-37	24 -	2
165-16002-4	24 -	1
165-16002-49	24 -	
	24 -	8
165-16002-5	24 -	4
165-16002-50	24 -	
	24 -	8
165-16002-51	24 -	4
165-16002-52	24 -	4
165-16002-53	24 - 6	1
165-16002-54	24 -	1
165-16002-55	24 - 7	1
165-16002-56	24 -	1
165-16002-7	24 -78	1
165-16002-8	24 -	1
165-16002-815	24 -	1
165-16002-816	24 -	1
165-16002-817	24 -	
165-16002-818	24 -	
165-16002-9	24 -73	1
165-16002-903	24 -	
165-16002-904	24 -	
165-16002-955	24 -	
165-16002-956	24 -	
165-16003-1	24 -	REF
165-16003-1	25 -	NP
165-16003-11	6 - 5	REF
165-16003-11	25 -	NP
165-16003-12	6 -	REF
165-16003-12	25 -	NP
165-16003-2	24 -	REF
165-16003-2	25 -	NP
165-16003-821	25 -	NP
165-16003-822	25 -	NP
165-16003-823	25 -	
165-16003-824	25 -	
165-16004-1	25 - 1	1
165-16004-2	25 -	1
165-16004-3	25 -	2
165-16004-4	25 -	2
165-16005-1	24 -	1
165-16005-101	24 -	2
165-16005-11	24 -	2
165-16005-15	24 -	2
165-16005-2	24 -	1
165-16005-3	24 - 2	1

PART NUMBER	FIGURE AND INDEX NUMBER	QUANTITY
165-16005-4	24 -	1
165-16005-5	24 - 3	1
165-16005-6	24 -	1
165-16005-7	24 - 1	2
165-16005-83	24 -	2
165-16005-87	24 -	4
165-16005-89	24 -	1
165-16005-90	24 -	1
165-16005-91	24 -	1
165-16005-92	24 -	1
165-16005-93	24 -	2
165-16005-97	24 - 4	2
165-16005-99	24 - 5	2
165-16006-1	25 -27	1
165-16006-2	25 -	1
165-16006-3	25 -	1
165-16006-4	25 -	1
165-16007-1	6 -41	REF
	25 -72	
165-16009	6 -22	4
165-16012	6 -23	4
165-16014	24 -40	2
165-16015-1	25 - 2	1
165-16015-2	25 -	1
165-16016	25 -13	2
165-16017-1	25 -45	1
165-16017-2	25 -	1
165-16018-1	25 -23	
	25 -	2
165-16018-2	25 -	
	25 -30	2
165-16019-10	25 -	1
165-16019-3	25 - 8	1
165-16019-4	25 -	1
165-16019-5	25 -15	1
165-16019-6	25 -	1
165-16019-7	25 -34	1
165-16019-8	25 -	1
165-16019-801	25 -	1
165-16019-802	25 -	1
165-16019-803	25 -	1
165-16019-804	25 -	1
165-16019-805	25 -	1
165-16019-806	25 -	1
165-16019-807	25 -	1
165-16019-808	25 -	1
165-16019-9	25 -40	1
165-16020-1	6 -44	REF
	25 -73	
165-16020-1	9 -35	1
165-16020-2	9 -	1
165-16020-3	9 -	
165-16020-4	9 -	
165-16021-3	25 -55	2
165-16021-5	25 -57	2
165-16021-7	25 -60	2
165-16021-9	25 -62	2
165-16022-1	25 -53	1
165-16022-2	25 -	1
165-16023-1	25 -12	1
165-16023-2	25 -	1
165-16023-801	25 -	1
165-16023-802	25 -	1
165-16023-803	25 -	
165-16023-804	25 -	
165-16024-1	25 -19	1
165-16024-2	25 -	1
165-16024-801	25 -	1

PART NUMBER	FIGURE AND INDEX NUMBER	QUANTITY
165-16024-802	25 -	1
165-16025-1	25 -37	1
165-16025-2	25 -	1
165-16025-803	25 -	1
165-16025-804	25 -	1
165-16026-1	25 -	
	25 -59	2
165-16026-2	25 -58	
	25 -	2
165-16027-1	25 -63	1
165-16027-2	25 -	1
165-16028-1	25 -44	1
165-16028-2	25 -	1
165-16028-801	25 -	
165-16028-802	25 -	
165-16028-803	25 -	1
165-16028-804	25 -	1
165-16031	30 -	5
165-16035-1	11 -	1
165-16035-2	11 -	1
165-16036-11	11 -	1
165-16036-2	11 -	1
165-16037-1	11 -	1
165-16037-2	11 -	1
165-16038-1	11 -	1
165-16038-2	11 -	1
165-16038-801	11 -	1
165-16038-802	11 -	1
165-16045-1	25 -56	
	25 -	2
165-16045-2	25 -	
	25 -	2
165-16046-3	129 -	4
165-16048-1	25 -61	
	25 -	2
165-16048-2	25 -	
	25 -	2
165-16051	25 -64	2
165-16052	25 -68	2
165-16053	25 -70	2
165-16054	25 -66	2
165-16055-1	25 - 6	1
165-16055-2	25 -	1
165-16056-1	25 - 4	1
165-16056-2	25 -	1
165-16057-1	25 -	
	25 -32	2
165-16057-2	25 -25	
	25 -	2
165-16058-1	25 -21	
	25 -	2
165-16058-2	25 -	
	25 -28	2
165-16059-1	25 -50	1
165-16059-2	25 -	1
165-16060-1	25 -47	1
165-16060-2	25 -	1
165-16061-11	25 -	2
165-16061-13	25 -	2
165-16061-15	25 -	2
165-16061-17	25 -	2
165-16065-3	129 -23	REF
165-16065-3	9 -39	1
165-16065-4	9 -	1
165-16067-5	129 -22	REF
165-16067-5	9 -31	1
165-16067-6	9 -	1
165-16068-7	6 -42	REF

PART NUMBER	FIGURE AND INDEX NUMBER	QUANTITY
165-16068-7	129 -21	
165-16068-7	9 -32	1
165-16068-8	9 -	1
165-16111	9 -47	REF
165-16111	11 -26	2
165-16112-1	24 -28	1
165-16112-2	24 -	1
165-16113	24 -58	2
165-16114-1	24 -36	1
165-16114-2	24 -	1
165-16115-1	24 -37	1
165-16115-2	24 -	1
165-16116-1	24 -50	1
165-16116-2	24 -	1
165-16117-1	24 -51	1
165-16117-2	24 -	1
165-16119-1	24 -35	1
165-16119-2	24 -	1
165-16120	25 -38	2
165-16126-1	24 -33	1
165-16126-2	24 -	1
165-16127-1	24 -34	1
165-16127-2	24 -	1
165-16128-1	24 -27	1
165-16128-2	24 -	1
165-16129-1	24 -42	1
165-16129-2	24 -	1
165-16130-1	24 -32	1
165-16130-2	24 -	1
165-16131-1	24 -43	1
165-16131-2	24 -	1
165-16132-1	24 -44	1
165-16132-2	24 -	1
165-16133-1	24 -45	1
165-16133-2	24 -	1
165-16135-1	24 -47	1
165-16135-2	24 -	1
165-16136-1	24 -48	1
165-16136-2	24 -	1
165-16137-1	24 -49	1
165-16137-2	24 -	1
165-16138-1	24 -46	1
165-16138-2	24 -	1
165-16139-1	24 -31	1
165-16139-2	24 -	1
165-16140-1	24 -30	1
165-16140-2	24 -	1
165-16141-1	24 -29	1
165-16141-2	24 -	1
165-16169-5	6 -43	REF
	129 -20	
165-16169-5	24 -62	2
165-16169-805	24 -	2
165-16218-1	24 -79	1
165-16218-2	24 -	1
165-16218-3	24 -	1
165-16218-4	24 -	1
165-16218-5	24 -	1
165-16218-6	24 -	1
165-16401-1	24 -25	1
165-16401-2	24 -	1
165-16401-3	24 -	1
165-16401-4	24 -	1
165-16401-5	24 -	1
165-16401-6	24 -	1
165-16401-7	24 -	1
165-16401-8	24 -	1
165-16402-11	24 -18	1

PART NUMBER	FIGURE AND INDEX NUMBER	QUANTITY
165-16402-12	24 -	1
165-16405-1	24 -15	1
165-16405-2	24 -	1
165-16406-1	24 -14	1
165-16406-2	24 -	1
165-16407-1	24 -13	1
165-16407-2	24 -	1
165-16407-3	24 -	1
165-16407-4	24 -	1
165-16407-7	24 -	1
165-16407-8	24 -	1
165-16408-1	24 -11	1
165-16408-2	24 -	1
165-16408-5	24 -	1
165-16408-6	24 -	1
165-16409-1	24 -10	1
165-16409-2	24 -	1
165-16409-5	24 -	1
165-16409-6	24 -	1
165-16410-1	24 - 9	1
165-16410-2	24 -	1
165-16411-1	24 -12	1
165-16411-2	24 -	1
165-16411-3	24 -	1
165-16411-4	24 -	1
165-16411-5	24 -	1
165-16411-6	24 -	1
165-16412-1	24 -19	1
165-16412-2	24 -	1
165-16413-1	24 - 8	1
165-16413-2	24 -	1
165-16414-1	24 -16	1
165-16414-2	24 -	1
165-16414-3	24 -	1
165-16414-4	24 -	1
165-16414-5	24 -	1
165-16414-6	24 -	1
165-16415-11	24 -17	1
165-16415-12	24 -	1
165-16416-1	24 -20	1
165-16416-2	24 -	1
165-16417-1	24 -21	1
165-16417-2	24 -	1
165-16418-1	24 -22	1
165-16418-2	24 -	1
165-16419-1	24 -23	1
165-16419-2	24 -	1
165-16419-3	24 -	1
165-16419-4	24 -	1
165-16419-5	24 -	1
165-16419-6	24 -	1
165-16420-1	24 -24	1
165-16420-2	24 -	1
165-16420-3	24 -	1
165-16420-4	24 -	1
165-16420-5	24 -	1
165-16420-6	24 -	1
165-16421-1	24 -26	1
165-16421-2	24 -	1
165-16422	24 -38	2
165-16423	24 -39	2
165-16424-3	24 -	2
165-16424-5	24 -41	2
165-16424-803	24 -	2
165-16424-805	24 -	2
165-16424-807	24 -	
165-16424-809	24 -	
165-16515-1	24 -64	1

PART NUMBER	FIGURE AND INDEX NUMBER	QUANTITY
165-16515-2	24 -	1
165-16516-1	24 -69	1
165-16516-2	24 -	1
165-16517-10	24 -	1
165-16517-3	24 -65	1
165-16517-4	24 -	1
165-16517-5	24 -66	1
165-16517-6	24 -	1
165-16517-7	24 -70	1
165-16517-8	24 -	1
165-16517-9	24 -71	1
165-18008	23 -	2
165-21410	26 -29	REF
165-21410	27 -13	2
165-22410	28 -50	2
165-22410-801	28A-53	2
165-22411	27 -65	REF
165-22411	28 -51	
	28A-54	4
165-31328	34 -25	2
165-31854-1	67 -39	1
165-31854-2	67 -	1
165-31875	67 -31	1
165-31876	67 -45	1
165-31877	67 -56	1
165-33510	98 -19	4
165-33512-1	98 -	2
165-33512-2	98 -	2
165-33540-3	98 -30	1
165-33540-4	98 -	1
165-33540-5	100 -68	REF
165-33540-5	98 -	1
165-33540-6	98 -	1
165-33541	98 -32	2
165-34187	43 -40	2
165-34320-10	90 -57	1
165-34320-7	90 -	1
165-34361	88 -	1
165-34361-3	88 -11	1
165-34510	188 -72	REF
	215 -28	
165-34510-3	84 - 5	1
165-34525-3	85 -18	1
165-34525-5	85 -	1
165-34528	85 -13	1
165-34529	85 - 4	1
165-34530	85 -34	REF
165-34530	84 -15	1
165-34688-10	82 -	1
165-34688-3	82 -22	1
165-34689	82 -	1
165-34689-3	82 -18	1
165-34689-5	82 -19	1
165-34690-10	82 -27	1
165-34691-10	82 -24	1
165-34692	82 -	1
165-34694	82 -21	1
165-34695-10	82 -	1
165-34695-3	82 -	1
165-34697	82 -	1
165-34749-3	82 -59	1
165-47041	270 - 8	1
165-48853	283 -	1
165-51017	145 -11	REF
165-51017	149 - 1	1
165-51017-3	149 -	1
165-51017-801	149 -	1
165-51017-803	149 -	1

PART NUMBER	FIGURE AND INDEX NUMBER	QUANTITY
165-51056-3	149 - 5	1
165-51056-5	149 - 4	1
165-51092-13	149 -	1
165-51099	149 - 6	1
165-51106	9 -	1
165-51107-11	6 -28	1
165-51107-13	6 -27	1
165-51107-21	149 -40	REF
165-51107-21	6 -	1
165-51107-7	6 -	1
165-51107-9	6 -39	REF
165-51107-9	149 -11	1
165-51108-3	9 -36	1
165-51108-5	6 -40	REF
165-51108-5	9 -37	
	149 -13	2
165-51109	149 -17	
	149 -34	4
165-51110	149 -18	
	149 -35	2
165-52008	125 -24	
	126 - 3	2
165-52041	139 -41	REF
165-52041	210 - 6	1
165-52041-29	200 - 2	1
165-523109	129 -	2
165-523118	125 -19	1
165-523128	128 - 6	2
165-523176	128 - 3	4
165-523183	125 -28	1
165-52321-5	125 -48	REF
165-52321-5	128 - 2	1
165-52321-6	128 -	1
165-52321-805	128 -	1
165-52321-806	128 -	1
165-52324-805	129 -16	1
165-52324-806	129 -	1
165-52324-903	129 -	1
165-52324-904	129 -	1
165-52326-1	128 - 1	REF
165-52326-1	129 -	NP
165-52326-2	128 -	REF
165-52326-2	129 -	NP
165-52328-1	128 -23	REF
165-52328-1	10 -50	1
165-52328-2	10 -	1
165-52333-1	128 -22	REF
165-52333-1	10 -51	1
165-52333-2	10 -	1
165-52333-3	10 -	1
165-52333-4	10 -	1
165-52333-5	10 -	1
165-52333-6	10 -	1
165-52334	125 - 7	1
165-52337-801	125 -	1
165-52338	125 -22	1
165-52339	125 -23	1
165-52342	125 -21	1
165-52345-3	125 -15	1
165-52346-3	125 - 8	1
165-52346-5	125 -	1
165-52346-805	125 -	1
165-52346-903	125 -	1
165-52347-1	128 -24	REF
165-52347-1	10 -48	1
165-52347-2	10 -	1
165-52354-1	128 -21	REF
165-52354-1	10 -38	1

PART NUMBER	FIGURE AND INDEX NUMBER	QUANTITY
165-52354-2	10 -	1
165-52355	10 -10	2
165-52356-10	10 -26	2
165-52359-3	129 - 5	1
165-52359-4	129 -	1
165-52360-1	129 -	2
165-52360-11	129 -	2
165-52360-12	129 -	2
165-52360-2	129 -	2
165-52361	129 - 3	
	129 -	4
165-52363-1	129 -	1
165-52363-2	129 -	1
165-52363-3	129 - 2	1
165-52363-4	129 -	1
165-52363-801	129 -	
165-52363-802	129 -	
165-52364-1	129 - 4	1
165-52364-2	129 -	1
165-52364-3	129 -	1
165-52364-4	129 -	1
165-52364-801	129 -	
165-52364-802	129 -	
165-52397-1	129 -	2
165-52397-2	129 -	2
165-52398	129 -18	2
165-52420	82 -26	1
165-53085	118 -50	1
165-53085-70	118 -	1
165-53101	285 -32	REF
165-53101-800	286 - 1	1
165-53102-800	286 - 4	1
165-53103	286 - 8	2
165-53112	286 - 7	1
165-53409-7	271 -26	1
165-53410-9	275 - 2	
	279 -	
	279 -	3
165-53532-11	271 -33	
	272 -	2
165-53532-3	271 -	
	271 -	
	272 -	
	272 -	6
165-53532-5	271 -	
	271 -	
	271 -	
	271 -	
	272 -	
	279 -20	8
165-53532-9	271 -	1
165-53580	274 - 2	1
165-53591	272 -	1
165-54239	187 - 5	6
165-54251	182 -13	
	182 -19	2
165-547118	125 -32	1
165-547133	125 -	1
165-547134	125 -36	1
165-54757	166 -26	REF
165-54757	125 -	1
165-58050-3	236 -	1
165-58050-803	236 -	1
165-58061-7	240 -	1
165-58112	225 - 5	3
165-58115	225 - 9	3
165-58117	225 -14	3
165-58118	225 - 1	3

PART NUMBER	FIGURE AND INDEX NUMBER	QUANTITY
165-58147-3	240 - 1	1
165-58153	224 - 2	
	240 - 2	2
165-58154	224 - 6	
	240 - 6	2
165-58155	224 - 4	
	240 - 4	2
165-58156	224 -13	
	240 -13	2
165-58159-5	211 -	1
165-58300	198 - 9	1
165-58300-3	240 -	1
165-58321	198 -	2
165-58321-3	240 -15	2
165-58322	198 -	
	240 -	2
165-58322-3	240 -18	1
165-58325	198 -	
	240 -21	2
165-58367	224 - 7	
	240 - 7	2
165-58368	224 - 9	
	240 - 9	2
165-58372-5	225 -23	3
165-58375	225 - 4	3
165-58376	225 - 2	3
165-58400	308 -29	1
165-58403	225 -15	3
165-58404	225 -18	3
165-58405-800	225 - 7	3
165-58410	225 -20	12
165-58474	225 -11	6
165-58475	224 -11	
	240 -11	2
165-58476	224 - 8	
	240 - 8	2
165-58479	224 -	
	240 -	2
165-58705-8117	129 -	2
165-58705-8131	206 -17	REF
165-58705-8131	129 - 1	2
165-587179	243 - 4	2
165-587195	243 -11	2
165-587227	243 - 5	6
165-58733	243 -24	2
165-58766-11	241 -	1
165-58766-9	241 -	1
165-58768	241 -10	1
165-58770	243 - 8	2
165-58775	243 -23	2
165-58776-7	243 - 1	1
165-58776-9	243 -	1
165-58782-3	243 -10	2
165-58782-5	243 - 9	2
165-58782-7	243 -	2
165-58784	243 -30	2
165-58785-3	243 -29	2
165-58788-1	206 - 1	1
165-58788-2	206 -	1
165-58789-1	206 -	1
165-58789-2	206 -	1
165-58791-17	206 - 7	2
165-58791-3	206 - 6	2
165-58791-5	206 -10	2
165-58791-7	206 - 9	2
165-71059-800	286 -11	
	286 -16	2
165-71060-3	286 -14	1

PART NUMBER	FIGURE AND INDEX NUMBER	QUANTITY
165-71060-800	286 -	1
165-71069	286 -13	
	286 -18	2
165-71070-800	286 -	1
165-71070-802	286 -	1
16501-1B	141 -23	1
16501-1C	141 -	
169	248 -	
	248 -	
17C1	169 -	5
17R21	159 - 4	1
170	248 -	
	248 -	
170-10001	1 - 1	REF
	5 -	
	246 -	
170-10001	2 -	NP
170-13001-61	2 - 2	REF
	4 -	
170-13001-61	3 -	1
170-13001-7	3 -	2
170-13001-809	3 -	AR
170-13003-13	3 -14	1
170-13003-15	3 -	1
170-13003-17	3 -16	1
170-13003-19	3 -17	1
170-13003-21	3 -	1
170-13003-23	3 - 1	1
170-13003-25	3 -22	1
170-13003-29	3 - 9	1
170-13003-35	3 - 5	1
170-13003-5	3 - 2	1
170-13003-7	3 - 3	1
170-13003-9	3 -10	1
170-13601-801	2 -	1
170-13601-805	2 -	
170-14001	20 -	REF
	22 -	
170-14001-803	2 - 4	REF
	7 -	
170-14001-803	6 -	1
170-14001-804	2 -	REF
	7 -	
170-14001-804	6 -	1
170-14001-805	6 -	1
170-14001-806	6 -	1
170-14001-807	6 -	1
170-14001-808	6 -	1
170-14001-809	6 -	1
170-14001-810	6 -	1
170-14001-811	6 -	1
170-14001-812	6 -	1
170-14001-823	6 -	1
170-14001-824	6 -	1
170-14001-827	6 -	1
170-14001-828	6 -	1
170-14001-829	6 -	1
170-14001-830	6 -	1
170-14001-835	6 -	1
170-14001-837	6 -	1
170-14001-838	6 -	1
170-14001-847	6 -	1
170-14001-848	6 -	1
170-14001-849	6 -	
170-14001-850	6 -	
170-14001-851	6 -	
170-14001-852	6 -	
170-14001-979	6 -	AR

PART NUMBER	FIGURE AND INDEX NUMBER	QUANTITY
170-14002	21 -	REF
170-14002-801	6 -	REF
170-14002-801	8 -	1
170-14002-802	6 -	REF
170-14002-802	8 -	1
170-14002-803	8 -	1
170-14002-804	8 -	1
170-14002-805	8 -	1
170-14002-806	8 -	1
170-14002-807	101 -	REF
170-14002-807	8 -	1
170-14002-808	101 -	REF
170-14002-808	8 -	1
170-14002-809	8 -	1
170-14002-810	8 -	1
170-14002-811	8 -	1
170-14002-812	8 -	1
170-14002-813	8 -	1
170-14002-814	8 -	1
170-14002-815	8 -	1
170-14002-816	8 -	1
170-14002-817	8 -	1
170-14002-819	8 -	1
170-14002-820	8 -	1
170-14002-821	8 -	1
170-14002-822	8 -	1
170-14002-951	8 -23	2
170-14003-121	10 - 1	1
170-14003-122	10 -	1
170-14003-23	10 -	1
170-14003-24	10 -	1
170-14003-25	10 -	2
170-14003-47	10 -	1
170-14003-48	10 -	1
170-14003-49	10 -	1
170-14003-50	10 -	1
170-14003-53	10 -	1
170-14003-54	10 -	1
170-14003-55	10 -	1
170-14003-56	10 -	1
170-14003-59	10 -	1
170-14003-60	10 -	1
170-14003-61	10 - 4	1
170-14003-62	10 -	1
170-14003-73	10 - 2	1
170-14003-74	10 -	1
170-14003-801	10 -	1
170-14003-802	10 -	1
170-14003-809	10 -	1
170-14003-810	10 -	1
170-14003-811	10 -	1
170-14003-812	10 -	1
170-14003-813	10 -	1
170-14003-814	10 -	1
170-14003-955	10 -	1
170-14003-956	10 -	1
170-14003-957	10 -	1
170-14003-958	10 -	1
170-14003-959	10 -	1
170-14003-960	10 -	1
170-14003-963	10 -	2
170-14004-801	8 - 3	REF
	10 -	
	12 -	
	13 -	
170-14004-801	9 -	1
170-14004-802	8 -	REF
	10 -	

PART NUMBER	FIGURE AND INDEX NUMBER	QUANTITY
170-14004-802	12 -	
	13 -	
170-14004-802	9 -	1
170-14004-803	9 -	1
170-14004-804	9 -	1
170-14004-805	9 -	1
170-14004-806	9 -	1
170-14004-807	9 -	1
170-14004-808	9 -	1
170-14004-809	9 -	1
170-14004-810	9 -	1
170-14004-811	9 -	1
170-14004-812	9 -	1
170-14004-821	9 -	1
170-14004-954	9 -	AR
170-14004-971	9 -	AR
	9 -	
170-14004-975	9 -	
170-14004-977	9 -	AR
170-14004-979	9 -	
170-14004-981	9 -	AR
170-14005-3	11 - 4	1
170-14005-31	9 - 1	REF
	14 -81	
170-14005-31	11 -	1
170-14005-32	9 -	REF
170-14005-32	11 -	1
170-14005-33	11 - 3	1
170-14005-40	11 -	1
170-14005-6	11 -	1
170-14005-7	11 -	2
170-14005-801	11 -	1
170-14005-802	11 -	1
170-14005-803	11 -	1
170-14005-804	11 -	1
170-14005-805	9 -49	REF
170-14005-805	11 - 5	2
170-14006-10	14 -	1
170-14006-101	14 -22	1
170-14006-102	14 -	1
170-14006-105	14 -	1
170-14006-106	14 -	1
170-14006-117	14 -15	1
170-14006-118	14 -	1
170-14006-123	14 -20	1
170-14006-124	14 -	1
170-14006-13	14 -62	1
170-14006-14	14 -	1
170-14006-141	14 -74	1
170-14006-142	14 -	1
170-14006-15	14 -45	1
170-14006-16	14 -	1
170-14006-17	14 -44	1
170-14006-18	14 -	1
170-14006-19	14 -21	1
170-14006-20	14 -	1
170-14006-201	8 - 4	REF
170-14006-201	14 -	1
170-14006-202	8 -	REF
170-14006-202	14 -	1
170-14006-21	14 -	1
170-14006-22	14 -	1
170-14006-23	14 -16	1
170-14006-24	14 -	1
170-14006-25	14 -28	1
170-14006-26	14 -	1
170-14006-27	14 -63	1
170-14006-28	14 -	1

PART NUMBER	FIGURE AND INDEX NUMBER	QUANTITY
170-14006-29	14 -46	1
170-14006-3	14 -75	1
170-14006-30	14 -	1
170-14006-33	14 -52	1
170-14006-34	14 -	1
170-14006-35	14 -53	1
170-14006-36	14 -	1
170-14006-37	14 -79	1
170-14006-38	14 -	1
170-14006-39	14 -78	1
170-14006-4	14 -	1
170-14006-40	14 -	1
170-14006-45	14 -13	1
170-14006-46	14 -	1
170-14006-49	14 -72	1
170-14006-50	14 -	1
170-14006-57	14 -23	1
170-14006-58	14 -	1
170-14006-63	14 -	1
170-14006-64	14 -	1
170-14006-69	14 -31	1
170-14006-7	14 -76	1
170-14006-70	14 -	1
170-14006-8	14 -	1
170-14006-801	14 -	1
170-14006-802	14 -	1
170-14006-89	14 -	4
170-14006-9	14 -77	1
170-14006-93	14 -65	1
170-14006-94	14 -	1
170-14006-951	14 -	1
170-14006-952	14 -	1
170-14025-13	9 -50	REF
170-14025-13	12 -28	1
170-14025-14	12 -	1
170-14025-15	12 -29	1
170-14025-16	12 -	1
170-14025-17	12 -30	1
170-14025-18	12 -	1
170-14025-19	12 -31	1
170-14025-20	12 -	1
170-14025-21	13 -25	1
170-14025-22	13 -	1
170-14025-23	12 -32	1
170-14025-24	12 -	1
170-14025-3	13 -	1
170-14025-4	13 -	1
170-14025-7	13 -	2
170-14025-801	12 -	1
170-14025-802	12 -	1
170-14115-10	12 -	1
170-14115-105	12 - 1	1
170-14115-106	12 -	1
170-14115-11	12 - 3	1
170-14115-12	12 -	1
170-14115-13	12 - 5	1
170-14115-14	12 -	1
170-14115-17	12 - 7	1
170-14115-18	12 -	1
170-14115-19	12 - 8	1
170-14115-20	12 -	1
170-14115-201	12 -	1
170-14115-202	12 -	1
170-14115-21	12 - 9	1
170-14115-22	12 -	1
170-14115-25	12 -16	1
170-14115-26	12 -	1
170-14115-37	12 -17	1

PART NUMBER	FIGURE AND INDEX NUMBER	QUANTITY
170-14115-38	12 -	1
170-14115-41	12 -10	1
170-14115-42	12 -	1
170-14115-5	12 - 2	1
170-14115-51	12 -11	1
170-14115-52	12 -	1
170-14115-6	12 -	1
170-14115-801	12 -	1
170-14115-802	12 -	1
170-14115-803	12 -	1
170-14115-804	12 -	1
170-14115-805	12 -	1
170-14115-806	12 -	1
170-14115-807	12 -	1
170-14115-808	12 -	1
170-14115-9	12 - 4	1
170-14115-93	12 -15	1
170-14115-94	12 -	1
170-14115-973	12 -	1
170-14115-974	12 -	1
170-14116-101	13 -	1
170-14116-102	13 -	1
170-14116-11	13 - 9	1
170-14116-12	13 -	1
170-14116-15	13 - 7	1
170-14116-16	13 -	1
170-14116-19	13 - 5	1
170-14116-20	13 -	1
170-14116-3	13 -13	1
170-14116-4	13 -	1
170-14116-51	13 -12	1
170-14116-52	13 -	1
170-14116-53	13 -10	1
170-14116-54	13 -	1
170-14116-55	13 - 8	1
170-14116-56	13 -	1
170-14116-57	13 - 6	1
170-14116-58	13 -	1
170-14116-59	13 - 4	1
170-14116-60	13 -	1
170-14116-61	13 - 3	1
170-14116-62	13 -	1
170-14116-65	13 - 2	1
170-14116-66	13 -	1
170-14116-69	13 - 1	1
170-14116-70	13 -	1
170-14116-71	13 -11	1
170-14116-72	13 -	1
170-14116-801	13 -	1
170-14116-802	13 -	1
170-14116-803	13 -	1
170-14116-804	13 -	1
170-14116-805	13 -	1
170-14116-806	13 -	1
170-14116-807	13 -	1
170-14116-808	13 -	1
170-14116-950	13 -	1
170-14116-951	13 -	1
170-14116-955	13 -	4
170-14116-961	13 -	1
170-14116-962	13 -	1
170-14116-963	13 -	1
170-14116-964	13 -	1
170-14116-969	13 -	1
170-14116-970	13 -	1
170-14234-1	13 -26	1
170-14234-2	13 -	1
170-14234-3	14 -	1

PART NUMBER	FIGURE AND INDEX NUMBER	QUANTITY
170-14234-4	14 -	1
170-14244-11	15 - 9	
	19 -	4
170-14421-3	15 -	
	19A-	2
170-14421-4	15 -	
	19A-	2
170-14424-3	15 -	
	19A-	4
170-14432-1	7 -	1
170-14432-2	7 -	1
170-14432-3	7 -15	1
170-14432-4	7 -	1
170-14432-5	7 -16	1
170-14432-6	7 -	1
170-14512-51	10 - 3	1
170-14512-52	10 -	1
170-14512-801	10 -	1
170-14512-802	10 -	1
170-14570-1	14 -	1
170-14570-11	14 -	1
170-14570-12	14 -	1
170-14570-13	14 -	1
170-14570-14	14 -	1
170-14570-2	14 -	1
170-14570-3	14 -32	1
170-14570-4	14 -	1
170-14570-5	14 -33	1
170-14570-6	14 -	1
170-14570-7	14 -34	1
170-14570-8	14 -	1
170-14571-1	14 -	1
170-14571-2	14 -	1
170-14571-3	14 -37	1
170-14571-4	14 -	1
170-14571-5	14 -42	1
170-14571-6	14 -	1
170-14571-7	14 -	1
170-14571-8	14 -	1
170-14601	21 -	REF
170-14601-801	6 - 1	1
170-14601-802	6 -	1
170-14601-803	6 -	1
170-14601-804	6 -	1
170-14601-805	6 -	1
170-14601-806	6 -	1
170-14601-807	6 -	1
170-14601-808	6 -	1
170-14601-809	6 -	1
170-14601-810	6 -	1
170-14601-811	6 -	1
170-14601-812	6 -	1
170-14601-813	6 -	1
170-14601-814	6 -	1
170-14601-815	6 -	1
170-14601-816	6 -	1
170-14601-817	6 -	1
170-14601-819	6 -	1
170-14601-820	6 -	1
170-14601-821	6 -	1
170-14601-822	6 -	1
170-14607-11	9 -	1
170-14607-12	9 -	1
170-14607-19	9 -	1
170-14607-20	9 -	1
170-14607-21	9 -10	1
170-14607-22	9 -	1
170-14622-13	203 -	1

PART NUMBER	FIGURE AND INDEX NUMBER	QUANTITY
170-14622-15	203 -	1
170-14622-21	205 -	1
170-14622-23	205 -	1
170-14622-25	205 -	1
170-14622-27	205 -	1
170-14622-37	203 -	
	205 -	2
170-14622-39	203 -	1
170-14622-40	205 -	1
170-14622-7	205 -	1
170-14622-9	205 -	1
170-14690-10	17 -	1
170-14690-3	17 -15	1
170-14690-4	17 -	1
170-14690-5	17 -19	1
170-14690-6	17 -	1
170-14690-7	17 -20	1
170-14690-8	17 -	1
170-14690-9	17 -21	1
170-14691-1	16 -19	
	19 -33	8
170-14691-2	16 -	
	19 -	8
170-14696-10	17 -	1
170-14696-11	17 -	
	17 -	
	17 -22	
	17 -	4
170-14696-12	17 -	
	17 -	
	17 -	
	17 -23	4
170-14696-3	17 -17	1
170-14696-4	17 -	1
170-14696-5	17 -16	1
170-14696-6	17 -	1
170-14696-7	17 -	1
170-14696-8	17 -	1
170-14696-9	17 -	1
170-20001	1 - 8	REF
	26A-	
170-20001	26 -	NP
170-20001-805	26 -	1
170-20001-807	26 -	2
170-20001-951	26A-	
	26A-	
	26A-	
	26A-	6
170-21	248 -	
	248 -	
170-21001	26 - 1	REF
170-21001	27 -	1
170-21001-13	27 -17	1
170-21001-14	27 -	1
170-21001-15	27 -18	1
170-21001-16	27 -	1
170-21001-3	27 -55	1
170-21001-4	27 -	1
170-21001-5	27 -56	1
170-21001-6	27 -	1
170-21001-7	27 -59	1
170-21001-8	27 -	1
170-21001-800	27 -	
170-21009-1	27 -22	1
170-21009-2	27 -	1
170-21014	27 -23	2
170-21026	27 -	2
170-21037	27 -	2

PART NUMBER	FIGURE AND INDEX NUMBER	QUANTITY
170-21039	27 -24	2
170-21048	27 -25	2
170-21049	27 -26	2
170-21057	27 -21	2
170-21071-800	27 -11	2
170-21072-951	27 -10	2
170-21102-1	27 -51	1
170-21102-2	27 -	1
170-21103-1	27 -53	1
170-21103-2	27 -	1
170-21105-1	27 -52	1
170-21105-2	27 -	1
170-21107-1	27 -54	2
170-21107-2	27 -	2
170-21120-1	27 -14	1
170-21120-2	27 -	1
170-21121-1	27 -	1
170-21121-2	27 -	1
170-21128	27 -62	2
170-21135-1	27 -27	1
170-21135-2	27 -	1
170-21136	27 -28	2
170-21302-1	27 -	1
170-21302-2	27 -	1
170-21303-5	27 -30	1
170-21304	27 -35	1
170-21311	27 -61	2
170-21404-3	26 -35	REF
170-21404-3	27 -36	1
170-21404-5	27 -	1
170-21408	26 -28	REF
170-21408	27 -44	2
170-21415-800	26 -	1
170-21415-950	29 -68	REF
170-21415-950	26 -13	1
170-21416	26 -15	1
170-21417-1	29 - 7	1
170-21417-2	29 -	1
170-21418-802	26 -	
170-21418-950	26 -	1
170-21419-800	26 -18	1
170-21422-51	26A-39	REF
170-21422-51	27 -39	1
170-21429-3	27 -	2
170-21429-5	27 -	2
170-21430-801	26 - 7	2
170-21430-803	26 -	2
170-21431	27 -	16
170-21432-3	27 -	1
170-21432-5	27 -	1
170-21433-3	26A-28	2
170-21433-5	26A-	
	26A-	4
170-21434-800	26A-	
	26A-	2
170-21434-950	26A-19	1
170-21435	26A-31	
	26A-	4
170-21436-3	27 -32	2
170-21436-4	27 -	2
170-21440	26A-	
	26A-	4
170-21440-800	26A- 3	2
170-21441	26A- 8	
	26A-	2
170-21441-3	26A-	1
170-21443	26A-11	
	26A-	2

PART NUMBER	FIGURE AND INDEX NUMBER	QUANTITY
170-21445-800	26A-16	
	26A-	2
170-21445-802	26A-	1
170-21446-11	26A-15	
	26A-	2
170-21446-13	26A-10	
	26A-	2
170-21446-17	26A- 2	
	26A-	2
170-21446-19	26A- 7	1
170-21446-21	26A-27	
	26A-	2
170-21446-3	26A-13	
	26A-	2
170-21446-801	26A-	
	26A-	1
170-21447	26A- 1	
	26A-	2
170-21447-3	26A-	1
170-21448	26A- 5	
	26A-	2
170-21448-3	26A-	1
170-21449	26A-18	1
170-21449-950	26A-	
	26A-	2
170-21450	26A-21	1
170-21450-51	26A-	
	26A-	2
170-21451	26A-22	
	26A-	2
170-22001-3	28 -55	2
170-22001-4	28 -57	2
170-22001-5	28 -58	2
170-22001-51	26 - 2	REF
170-22001-51	28 -	2
170-22001-7	28 - 7	2
170-22001-800	28 -	2
170-22001-811	28 - 8	2
170-22001-815	28 -	2
170-22001-816	28 -	48
170-22001-821	28 -	2
170-22001-823	28 -	
170-22001-831	28 -	2
170-22001-833	28 -	
170-22001-841	28 -	
170-22007	28 - 3	2
170-22007-21	28A- 3	2
170-22008	28 - 4	2
170-22008-21	28A- 4	2
170-22014	28 -11	2
170-22014-801	28A-11	2
170-22015	28 -12	2
170-22015-21	28A-12	2
170-22019	28 -13	2
170-22019-801	28A-13	2
170-22020	28 -14	2
170-22020-21	28A-14	2
170-22024	28 -15	2
170-22024-801	28A-15	2
170-22025	28 -16	2
170-22025-21	28A-16	2
170-22029	28 -18	2
170-22029-801	28A-19	2
170-22030	28 -19	2
170-22030-21	28A-20	2
170-22034	28 -20	2
170-22035	28 -21	2
170-22035-21	28A-22	2

PART NUMBER	FIGURE AND INDEX NUMBER	QUANTITY
170-22037	28 -31	2
170-22037-803	28 -	2
170-22037-809	28 -	
170-22038	28 -32	2
170-22038-21	28A-26	2
170-22043	28 -33	2
170-22043-801	28A-33	2
170-22044	28 -34	2
170-22044-21	28A-34	2
170-22048	28 -35	2
170-22048-801	28A-37	2
170-22049	28 -36	2
170-22049-21	28A-38	2
170-22054	28 -37	2
170-22054-801	28A-39	2
170-22055	28 -38	2
170-22055-21	28A-40	2
170-22059	28 -39	2
170-22059-801	28A-41	2
170-22060	28 -40	2
170-22060-21	28A-42	2
170-22065	28 -42	2
170-22065-801	28A-45	2
170-22066	28 -43	2
170-22066-21	28A-46	2
170-22069	28 -45	2
170-22069-23	28A-47	2
170-22070	28 -46	2
170-22070-21	28A-48	2
170-22071	28 -47	2
170-22071-21	28A-52	2
170-22071-800	28 -	
170-22072	28 -48	2
170-22072-21	28A-51	2
170-22072-951	28 -	
170-22073	28 -49	2
170-22073-801	28A-50	2
170-22101	28 - 5	
	28A- 5	4
170-22102-11	28 -	2
170-22102-13	28 -	2
170-22102-15	28 -	2
170-22102-17	28 -	2
170-22102-19	28 -	2
170-22102-21	28 -	2
170-22102-23	28 -	2
170-22102-3	28 -	2
170-22102-5	28 -	2
170-22102-7	28 -	2
170-22102-803	28A-	2
170-22102-805	28A-	2
170-22102-807	28A-	2
170-22102-809	28A-	2
170-22102-811	28A-	2
170-22102-813	28A-	2
170-22102-815	28A-	2
170-22102-817	28A-	2
170-22102-819	28A-	2
170-22102-821	28A-	2
170-22102-825	28A-	2
170-22102-9	28 -	2
170-22102-953	28 -	
170-22102-955	28 -	
170-22102-957	28 -	
170-22102-959	28 -	
170-22102-961	28 -	
170-22102-963	28 -	
170-22102-965	28 -	

PART NUMBER	FIGURE AND INDEX NUMBER	QUANTITY
170-22102-967	28 -	
170-22102-969	28 -	
170-22102-971	28 -	
170-22102-973	28 -	
170-22103	28 -	2
170-22103-951	28 -	
170-22104	28 -	2
170-22104-953	28 -	
170-22111	28 -23	2
170-22112	28 -54	2
170-22114	28 -24	2
170-22114-801	28A-28	2
170-22115	28 -44	2
170-22115-800	28 -	2
170-22117	28 - 6	2
170-22117-21	28A- 6	2
170-22118	28 -	2
170-22118-21	28A- 7	2
170-22301-51	28 - 2	2
170-22311	28 -63	
	28A-65	4
170-22408	28 -26	
	28A-29	4
170-22409	27 -64	REF
170-22409	28 -29	
	28A-31	4
170-22420	28 -22	2
170-22420-21	28A-24	2
170-22427	28 -10	
	28A-10	4
170-22434	26A-40	REF
170-22434	28 - 1	2
170-22434-800	28 -	2
170-22434-801	28A- 1	2
170-22440	28 -17	2
170-22440-23	28A-17	2
170-22440-25	28A-	2
170-22440-800	28 -	2
170-22440-801	28 -	
	28A-18	16
170-22440-802	28 -	2
170-22440-803	28A-	2
170-22441	28 -41	2
170-22441-23	28A-43	2
170-22441-25	28A-	2
170-22441-800	28 -	2
170-22441-801	28 -	
	28A-44	24
170-22441-803	28 -	2
170-22441-805	28A-	2
170-23001-801	26 - 3	REF
170-23001-801	29 -	1
170-23001-805	29 -	1
170-23001-807	29 -	1
170-23022	29 -	1
170-23023	29 -17	1
170-23025	29 -20	1
170-23026	29 -19	1
170-23085-1	31 -10	1
170-23085-12	31 -	1
170-23085-3	31 -	1
170-23085-52	31 -	1
170-23085-800	31 -	1
170-23085-952	31 -	1
170-23110	29 -22	1
170-23111-51	29 -25	1
170-23416-7	26 -37	REF
	134 -38	

PART NUMBER	FIGURE AND INDEX NUMBER	QUANTITY
170-23416-7	241 -28	
170-23416-7	29 -21	1
170-23420	26 -20	1
170-25001	26 - 6	REF
170-25001	31 -	NP
170-25001-800	31 -	NP
170-25004-10	31 -	1
170-25004-101	31 - 1	1
170-25004-11	31 -	1
170-25004-12	31 -	1
170-25004-13	31 -	2
170-25004-15	31 - 2	1
170-25004-5	31 -	1
170-25004-9	31 -	1
170-25005	31 -	1
170-25005-3	31 -30	1
170-25005-7	31 -	2
170-25005-800	31 -	1
170-25005-801	31 -	1
170-25005-802	31 -	1
170-25005-803	31 -	1
170-25006-1	31 -34	1
170-25006-2	31 -	1
170-25006-5	31 -35	2
170-25008	31 -33	1
170-25009-51	31 - 8	1
170-25009-52	31 -	1
170-25010	31 -	1
170-25011	31 -	1
170-25012-1	31 -15	1
170-25012-2	31 -	1
170-25021-52	31 -	1
170-25021-6	31 -	1
170-25021-8	31 -	1
170-25021-9	31 -16	1
170-25022-2	31 -	1
170-25022-3	31 - 6	1
170-25022-5	31 - 7	1
170-25022-51	31 -	1
170-25026	31 -29	1
170-25026-11	31 -32	1
170-25026-3	31 -36	1
170-25026-5	31 -38	1
170-25026-7	31 -37	1
170-25026-800	31 -	1
170-25026-9	31 -	1
170-25027-1	31 -43	1
170-25027-2	31 -	1
170-25034-5	31 -	
	31 -	2
170-25034-51	31 -20	1
170-25034-52	31 -	1
170-25034-7	31 -	1
170-25034-8	31 -	1
170-25035-10	31 -	1
170-25035-51	31 -21	1
170-25035-52	31 -	1
170-25035-7	31 -	1
170-25035-8	31 -	1
170-25035-9	31 -	1
170-25036-1	31 -	1
170-25036-2	31 -	1
170-25039	31 -24	4
170-25040	31 -	1
170-25040-3	31 -31	1
170-25040-800	31 -	1
170-25040-951	31 -	1
170-25041-951	31 -	1

PART NUMBER	FIGURE AND INDEX NUMBER	QUANTITY
170-25041-952	31 -	1
170-25041-953	31 -27	2
170-25041-955	31 -26	1
170-25041-956	31 -	1
170-25042-101	31 -	1
170-25042-102	31 -	1
170-25042-3	31 -18	1
170-25042-4	31 -	1
170-25042-801	31 -19	1
170-25043	31 -22	2
170-25044-1	31 -	1
170-25044-2	31 -	1
170-31022	33 -33	4
170-31023	33 -36	4
170-31024	33 -35	8
170-31026	32 -10	1
170-31057-3	34 -	1
170-31060	32 -13	1
170-31061	34 -40	1
170-31062	34 -42	1
170-31064	34 -44	1
170-31110	47 - 6	1
170-31111	47 - 8	1
170-31112-51	47 - 7	1
170-3113-1	39 -	1
170-31131-10	39 -	1
170-31132-11	51 -	1
170-31132-13	51 -26	1
170-31132-14	51 -	1
170-31132-3	51 -34	1
170-31132-4	51 -	1
170-31132-5	51 -35	1
170-31132-6	51 -	1
170-31132-7	51 -23	1
170-31132-8	51 -	1
170-31132-801	39 - 1	REF
	52 -	
	298 -	
170-31132-801	51 -	1
170-31132-804	51 -	1
170-31132-806	51 -	1
170-31132-807	51 -	1
170-31132-808	51 -	1
170-31132-9	51 -17	1
170-31148-10	53 -	1
170-31148-14	53 -	1
170-31148-15	53 - 2	1
170-31148-16	53 -	1
170-31148-17	53 - 3	1
170-31148-18	53 -	1
170-31148-19	53 - 4	1
170-31148-20	53 -	1
170-31148-49	51 - 2	REF
170-31148-49	53 -	1
170-31148-5	53 - 1	1
170-31148-50	51 -	REF
170-31148-50	53 -	1
170-31148-800	53 -	1
170-31148-803	53 -	1
170-31148-804	53 -	1
170-31148-952	53 -	1
170-31148-953	53 -19	1
170-31148-954	53 -20	1
170-31148-955	53 -23	1
170-31148-957	53 -	1
170-31155-1	51 - 9	1
170-31155-2	51 -	1
170-31156-1	51 -10	1

PART NUMBER	FIGURE AND INDEX NUMBER	QUANTITY
170-31156-2	51 -	1
170-31157	51 - 8	1
170-31158-951	48 -26	1
170-31158-952	48 -27	1
170-31158-953	48 -24	1
170-31158-954	48 -25	1
170-31192-1	48 -30	1
170-31192-2	48 -31	1
170-31196-800	47 -19	1
170-31199-801	47 -16	1
170-31199-802	47 -	1
170-31300	32 -41	REF
170-31300	76 -	1
170-31300-13	76 -	1
170-31300-15	76 -26	1
170-31300-16	76 -	1
170-31300-17	76 -27	1
170-31300-19	76 -25	1
170-31300-21	76 -	1
170-31300-3	76 -28	1
170-31300-5	76 -	1
170-31300-7	76 -	1
170-31300-9	76 -24	1
170-31313	74 -28	1
170-31315-1	74 -38	1
170-31315-2	74 -	1
170-31316-3	74 -	
	74 -	3
170-31316-4	74 -	
	74 -	3
170-31317-3	74 -	
	74 -	3
170-31317-4	74 -	
	74 -	3
170-31319	74 -	1
170-31320-1	32 -33	1
170-31320-2	32 -	1
170-31321-1	77 -60	1
170-31321-2	77 -	1
170-31322-1	77 -	1
170-31322-2	77 -	1
170-31322-3	77 -43	1
170-31322-4	77 -	1
170-31332-801	76 - 5	10
170-31333	76 - 7	1
170-31336-10	76 -10	1
170-31337	76 -11	1
170-31338	76 -12	1
170-31339	76 -13	1
170-31341	76 -14	1
170-31343	78 -12	1
170-31369	77 -44	1
170-31370	77 -	1
170-31375	77 -48	2
170-31380	32 -32	1
170-31408-11	37 -	1
170-31408-13	37 -	1
170-31408-19	37 -	2
170-31408-21	37 -	1
170-31408-23	37 -	2
170-31408-3	37 -29	1
170-31408-35	37 -	1
170-31408-5	37 -	1
170-31408-7	37 -	1
170-31408-9	37 -	1
170-31426-1	38 -	1
170-31426-2	38 -	1
170-31437-1	37 -54	1

PART NUMBER	FIGURE AND INDEX NUMBER	QUANTITY
170-31437-2	37 -	1
170-31469	39 -	1
170-31478	48 -	1
170-31490-3	47 -20	1
170-31575	76 - 8	1
170-31590-11	76 - 9	1
170-31836	118 -21	1
170-31837-1	38 -16	1
170-31837-2	38 -	1
170-31838	70 -70	REF
170-31838	71 - 5	2
170-31839-10	71 -51	2
170-31841-11	38A-14	2
170-31841-13	38A-	2
170-31841-3	38A-	2
170-31841-5	38A-	2
170-31841-7	38A-13	1
170-31841-9	38A-	1
170-31847	70 -50	1
170-31872	70 -49	1
170-31872-3	70 -	1
170-31872-5	70 -	1
170-33550	97 -	2
170-33550-3	97 -30	2
170-33551	97 -28	2
170-33552	97 -29	2
170-33553	97 -31	2
170-33608	100 -73	REF
170-33608	51 -12	1
170-33608-3	51 -	1
170-33609	100 -74	REF
170-33609	51 -13	1
170-33610	135 -22	1
170-39030	79 -	2
170-42030	108 - 9	
	108 -22	4
170-43001	106 -	REF
	107 -	
170-43001	112 -	NP
170-43005	112 - 1	REF
170-43005	113 -	1
170-43033	37 -34	1
170-43059	113 - 1	REF
170-43059	115 -	1
170-48125	247 -29	2
170-48125-11	247 -	2
170-48166-11	252 -57	1
170-48204	260 -17	2
170-48302	264 -14	
	267 -29	4
170-48305-1	264 - 6	1
170-48305-2	264 -	1
170-48306-1	264 -	1
170-48306-2	264 -	1
170-48307	264 -	
	267 -	4
170-48308-10	268 -48	2
170-48308-5	264 -30	
	265 -35	4
170-48310	265 -34	2
170-48312	264 -	2
170-48313-3	264 -11	1
170-48313-4	264 -	1
170-48313-5	264 -	
	267 -31	2
170-48313-6	264 -	
	267 -	2
170-48314-3	264 - 7	2
170-48314-5	264 -	
	267 -27	2
170-48831-154	254 - 8	1
170-48854-960	285 -31	REF
170-48854-960	257 -43	1
170-48854-964	257 -	1
170-51007	143 -14	1
170-51007-800	143 -	1
170-51011	146 -13	1
170-51024-1	141 - 7	1
170-51024-2	141 -	1
170-51031-954	285 - 7	1
170-51031-956	285 -	1
170-51102	150 -44	1
170-51103	149 -30	1
170-51104-1	143 -	1
170-51104-2	143 -17	1
170-51105	143 -21	1
170-51105-3	143 -	1
170-51106	143 -23	1
170-51110	140 -52	1
170-51112	140 -78	1
170-51114	6 -	REF
	149 -	
170-51114	145 -	NP
170-51116-7	141 - 4	1
170-51174-3	285 -10	1
170-51174-5	285 - 1	1
170-51801-23	285 -24	1
170-51801-33	149 -42	REF
170-51801-33	150 -30	1
170-51801-39	149 -33	1
170-51801-41	149 -32	1
170-51801-55	150 -24	1
170-51801-57	150 -57	REF
170-51801-57	149 -38	1
170-51801-59	149 -41	REF
170-51801-59	150 -29	1
170-51801-61	150 -18	1
170-51801-63	150 -37	1
170-51801-65	150 -36	1
170-51801-67	150 -33	1
170-51801-961	150 -42	1
170-51801-963	150 -43	1
170-51801-977	285 -27	1
170-51801-979	285 -	1
170-51801-981	285 -25	1
170-51801-983	150 -17	1
170-51801-985	285 -20	1
170-51801-987	149 -	1
170-52010	26A-41	REF
170-52010	132 - 6	1
170-52013	2 -	REF
170-52013	125 -	NP
170-52014-1	6 -	REF
	206 -	
170-52014-1	128 -	NP
170-52014-2	6 -	REF
	206 -	
170-52014-2	128 -	NP
170-52020	130 -39	REF
	135 -37	
170-52020	37 -	1
170-52020-11	37 -	1
170-52020-13	37 -	1
170-52020-15	37 -	2
170-52020-3	37 -37	1
170-52020-5	37 -38	1

PART NUMBER	FIGURE AND INDEX NUMBER	QUANTITY
170-52020-7	37 -39	1
170-52020-9	37 -40	1
170-52033	135 -12	1
170-52035-3	132 -43	
	132 -	8
170-52035-5	132 -44	
	132 -	4
170-52101	130 - 1	REF
170-52101	127 -	1
170-52101-3	127 -	1
170-52103	127 - 7	1
170-52201	130 -27	2
170-52202	132 -52	1
170-52203	130 -29	1
170-52204	130 -37	REF
170-52204	56 -16	1
170-52205	132 -31	2
170-52209-5	132 -26	1
170-522103	131 -15	2
170-522104-5	131 -18	1
170-522107-3	132 - 9	AR
170-522107-5	132 -10	AR
170-522107-7	132 -	AR
170-522108	132 - 4	AR
170-522108-851	132 -	AR
170-522108-852	132 -	AR
170-522109	130 -36	REF
170-522109	37 -	2
170-522109-3	37 -43	2
170-52211-11	130 -	1
170-52211-7	130 -	1
170-52211-9	130 - 3	1
170-522117	132 -	1
170-522123	132 -	1
170-522124	132 -23	1
170-522125	132 -22	1
170-52213	132 -55	1
170-52215	132 -53	1
170-52216	37 -	1
170-522254	133 -	1
170-522254-3	133 - 7	1
170-522271	130 - 5	1
170-522272	134 - 4	1
170-522275-3	134 - 5	1
170-522275-5	134 - 3	1
170-522276	134 - 1	1
170-522281-800	130 -	1
170-522283-800	130 - 8	1
170-522284	130 -15	1
170-522285	130 -10	1
170-522288	130 -11	1
170-52232	132 -54	1
170-52233	130 -28	1
170-52254	130 -	1
170-52254-801	130 -24	1
170-52255	130 -	1
170-52255-801	130 -23	1
170-52256	37 -30	1
170-52260	132 -28	1
170-52261	132 -27	1
170-52262	132 -29	1
170-52288	132 -57	1
170-52289	51 -	1
170-52289-800	51 -	1
170-52293	132 -59	1
170-52294-1	212 - 1	1
170-52294-2	212 - 2	1
170-52295	212 - 8	1
170-52296	212 - 9	1
170-52297-1	212 - 5	1
170-52297-2	212 - 6	1
170-52304	125 -39	1
170-52304-3	125 -	1
170-52304-5	125 -	1
170-52311	128 -11	2
170-52312	128 - 8	2
170-523145	129 - 6	4
170-52319	128 -20	REF
170-52319	125 -43	1
170-52319-3	125 -	1
170-52319-5	125 -	1
170-52320	125 - 1	1
170-52323	125 -42	1
170-52323-3	125 -	1
170-52323-5	125 -	1
170-52329	125 -18	1
170-52331	126 -	1
170-52403	26A-43	REF
170-52403	137 - 1	1
170-52404	135 -40	REF
170-52404	51 - 7	1
170-52406	26A-	2
170-52407	26A-36	1
170-52408	26A-37	1
170-52412	77 -53	2
170-52427	41 -39	1
170-52429	135 -42	REF
170-52429	41 -36	1
170-52429-3	41 -	1
170-52429-5	41 -	1
170-52432-2	137 -	1
170-52432-803	137 - 8	1
170-52435	137 -11	2
170-53001-50	36 -	REF
	121 -	
	286 -	
170-53001-50	120 -	NP
170-53009-30	119 -	REF
	120 - 1	
	123 -	
170-53009-30	118 -	1
170-53011	119 -30	2
170-53012	286 - 2	1
170-53015-1	118 -	1
170-53015-2	118 -12	1
170-53016	118 -13	2
170-53017	118 - 3	1
170-53017-60	118 -	1
170-53017-802	118 -	
170-53018	119 - 3	2
170-53019	119 -24	1
170-53020	119 -25	AR
170-53028-1	302 -	AR
170-53028-2	302 -	AR
170-53028-3	302 -	AR
170-53028-4	302 -	AR
170-53031-7	121 -	1
170-53031-802	121 - 1	1
170-53031-804	121 -	1
170-53031-951	121 -	1
170-53031-952	121 -	1
170-53031-953	121 -	1
170-53031-955	121 -	1
170-53032-1	121 -10	1
170-53032-2	121 -	1
170-53033	121 - 4	1

PART NUMBER	FIGURE AND INDEX NUMBER	QUANTITY
170-53034	121 - 5	1
170-53037-10	123 -	1
170-53037-3	123 -20	2
170-53037-5	123 -18	2
170-53038	302 - 3	1
170-53039	302 - 4	1
170-53041-3	124 - 2	2
170-53042	119 -	1
170-53043-1	119 - 1	1
170-53043-2	119 -	1
170-53045	123 -22	1
170-53046-1	124 -	1
170-53046-2	124 - 1	1
170-53047-1	118 - 4	1
170-53047-2	118 -	1
170-53048-3	119 -	2
170-53048-5	119 -	2
170-53051	119 -	2
170-53052	119 -29	1
170-53053	123 -33	2
170-53054	119 -13	1
170-53055-3	123 - 5	2
170-53055-5	123 - 4	2
170-53056	123 -16	2
170-53057	123 -	1
170-53058-5	123 -	1
170-53058-6	123 - 1	1
170-53058-7	123 - 2	2
170-53061-3	123 - 9	1
170-53061-800	123 -	1
170-53061-802	123 -	1
170-53061-804	123 -11	1
170-53061-952	123 -12	1
170-53062	118 -	1
170-53062-10	118 -	1
170-53063	121 -31	1
170-53065-1	302 - 1	1
170-53065-10	302 -	1
170-53065-11	302 -	1
170-53065-2	302 -	1
170-53065-800	302 -	1
170-53067-801	118 - 8	1
170-53067-802	118 - 9	1
170-53076	141 -	1
170-53077-950	307 -48	1
170-53077-956	307 -	1
170-53083-800	121 -40	1
170-53083-802	121 -	1
170-53084-1	121 - 2	1
170-53084-2	121 - 3	1
170-53101-800	121 - 7	1
170-53101-802	121 -	1
170-53142	119 -	1
170-53158-5	123 -36	1
170-53158-6	123 -	1
170-53163	123 -	1
170-53163-10	123 -	1
170-53163-11	123 -35B	1
170-53163-21	123 -	1
170-53163-9	123 -35A	1
170-53170-1	302 - 2	1
170-53170-800	302 - 7	
	302 -	2
170-53334	281 - 3	1
170-53334-950	281 -	1
170-53335-952	277 - 6	1
170-54014-1	6 -	REF
	166 -	

PART NUMBER	FIGURE AND INDEX NUMBER	QUANTITY
170-54014-1	168 -	
	170 -	
170-54014-1	167 -	NP
170-54014-2	6 -	REF
	168 -	
	170 -	
170-54014-2	167 -	NP
170-54014-950	168 -	
170-54029	172 -27	1
170-54033	73 - 3	1
170-54035-10	39 -11	1
170-54035-105	39 -	1
170-54035-5	39 -	1
170-54048-802	162 - 4	1
170-54068-801	157 - 1	REF
170-54068-801	183 -	1
170-54068-803	183 -	1
170-54068-804	183 -	1
170-54068-805	183 -	1
170-54069	153 -	1
170-54069-3	153 -46	1
170-54070-802	183 - 1	1
170-54070-804	183 -	1
170-54070-805	183 -	1
170-54070-806	183 -	1
170-54071	162 - 1	REF
170-54071	186 -	1
170-54072	186 -	1
170-54072-3	186 - 9	1
170-54073	186 -	1
170-54073-3	186 -12	1
170-54074	186 - 1	1
170-54075	114 -34	
	186 - 2	8
170-54076	186 -	1
170-54076-3	186 -11	1
170-54079	50 -10	1
170-54080-800	157 -21	1
170-54083	142 - 5	1
170-54084	275 -12	1
170-54084-3	38A-	1
170-54088	121 -	1
170-54089	47 -17	1
170-54099	175 -32	
	175 -33	
	175 -34	3
170-54099-951	175 -	
	299 -51	3
170-54129	53 -	2
170-54129-3	53 -32	2
170-54129-5	53 -33	2
170-54131	73 -	REF
	173 -	
170-54131	172 -	NP
170-54443	47 -21	1
170-54712-1	66 -10	1
170-54712-2	66 -11	1
170-54763	125 -33	1
170-54763-10	273 -	1
170-58010-3	237 -	2
170-58050	227 - 1	1
170-58051-3	221 -	1
170-58051-5	221 -	1
170-58051-803	221 -	1
170-58060C	36 -	REF
	194 -	
170-58060C	193 -	NP
170-58063-801	6 -	REF

PART NUMBER	FIGURE AND INDEX NUMBER	QUANTITY
170-58063-801	202 -	
	203 -	
170-58063-801	201 -	NP
170-58063-802	6 -	REF
	204 -	
	205 -	
170-58063-802	201 -	NP
170-58063-803	201 -	NP
170-58063-804	201 -	NP
170-58118	200 -67	REF
170-58118	3 -24	2
170-58145-809	10 -44	2
170-58154	62 -31	1
170-58155	62 -32	1
170-58156	192 -28	1
170-58156-3	192 -	1
170-58156-5	192 -	1
170-58156-7	192 -	1
170-58165	193 -67	1
170-58166	3 -25	4
170-58166-3	3 -28	1
170-58173-11	228 -	1
170-58173-7	228 -	1
170-58173-9	188 -	1
170-58202-3	221 - 1	1
170-58237	221 -10	1
170-58237-3	221 -	1
170-58237-800	221 -	1
170-58239	221 - 2	1
170-58240	221 - 3	1
170-58241	221 - 4	1
170-58243-3	190 -	1
170-58243-5	190 -	1
170-58243-7	190 -	1
170-58243-9	190 -	1
170-58247	221 - 9	1
170-58248-15	228 - 2	1
170-58248-5	228 -	1
170-58249	76 -16	1
170-58252-5	59 -16	1
170-58253	228 -	1
170-58255	228 - 1	1
170-58259-3	225 -34	1
170-58259-5	239 - 2	1
170-58259-7	213 - 6	1
170-58260	79 -20	1
170-58269	237 - 1	2
170-58270	237 - 5	2
170-58271	237 - 8	2
170-58272-900	237 - 7	2
170-58273	237 - 3	2
170-58274-3	237 -20	2
170-58274-5	237 - 2	2
170-58275	237 -10	2
170-58276	237 -17	2
170-58277	237 -13	2
170-58278	237 - 4	2
170-58279	237 - 9	2
170-58280	237 -16	2
170-58284-1	77 -	1
170-58284-2	77 -	1
170-58297	23 -82	REF
170-58297	201 -53	1
170-58636-803	202 -	1
170-58636-805	202 -	1
170-58637-803	204 -	1
170-58637-815	204 -	1
170-58639-805	188 -	1

PART NUMBER	FIGURE AND INDEX NUMBER	QUANTITY
170-58639-901	196 - 3	REF
170-58639-901	228 -	1
170-58639-903	198 - 2	REF
170-58639-903	228 -	1
170-58643-801	198 - 1	REF
170-58643-801	228 -	1
170-58643-802	196 - 5	REF
170-58643-802	228 -	1
170-58645-3	189 -	1
170-58650-950	196 - 4	REF
170-58650-950	227 -	1
170-58650-952	227 -	1
170-58651-7	193 - 1	REF
170-58651-7	221 -	1
170-58651-807	221 -	1
170-58656-5	208 -	1
170-587100-7	241 -	1
170-587121-3	243 - 3	2
170-587122-3	243 -	2
170-587132	241 -25	1
170-587133	241 -26	1
170-587134	241 -23	1
170-587135	241 -22	1
170-587136	241 -19	1
170-587137	241 -21	1
170-587138	241 -18	1
170-587140	241 -20	1
170-58729	132 -51	2
170-58752	242 - 3	4
170-58753	242 -22	2
170-58754	242 -	
170-58755	242 -16	2
170-58756	242 -15	1
170-58762	242 - 2	1
170-58763	242 - 8	1
170-58763-800	242 -	1
170-58764	242 -14	1
170-58765	242 -	1
170-58766	241 -	1
170-58779-7	243 -15	2
170-58779-9	243 -	2
170-58780-5	242 - 1	1
170-58786	241 -29	REF
170-58786	26 -24	1
170-58793	31 - 3	1
170-58794	31 - 4	1
170-58798	242 -27	1
170-58799-61	208 -39	REF
170-58799-61	212 -27	1
170-58799-63	208 -38	REF
170-58799-63	212 -11	1
170-58799-65	210 -58	REF
170-58799-65	212 -40	1
170-58799-67	210 -57	REF
170-58799-67	212 -28	1
170-58801-49	201 -	1
170-58801-55	201 -	1
170-58801-57	234 -18	REF
170-58801-57	201 -27	1
170-58801-59	234 -20	REF
170-58801-59	201 -22	1
170-58802-1007	202 -	1
170-58802-1009	204 -	1
170-58802-1023	202 -	1
170-58802-1025	204 -	1
170-58802-1077	204 -	1
170-58802-1903	202 -	1
170-58802-1905	204 -	1

PART NUMBER	FIGURE AND INDEX NUMBER	QUANTITY
170-58802-1919	202 -	1
170-58802-1921	204 -	1
170-58802-23	202 -22	1
170-58802-25	204 -24	1
170-58802-7	202 -24	1
170-58802-9	204 -26	1
170-58802-903	202 - 2	1
170-58802-905	204 - 2	1
170-58802-919	202 - 4	1
170-58802-921	204 - 4	1
170-58803-1023	203 -	1
170-58803-1025	205 -	1
170-58803-1953	205 -	1
170-58803-1957	205 -	1
170-58803-23	203 -17	1
170-58803-25	205 -23	1
170-58803-3	200 -56	1
170-58803-5	200 -57	1
170-58803-53	205 -28	1
170-58803-57	205 -32	1
170-58803-7	194 -32	REF
170-58803-7	200 -62	1
170-58803-79	191 -51	REF
170-58803-79	188 -33	1
170-58803-9	194 -33	REF
170-58803-9	200 -63	1
170-58803-953	205 -29	1
170-58803-957	205 -33	1
170-58804-31	191 -55	REF
170-58804-31	190 -20	1
170-58804-35	219 -32	REF
170-58804-35	190 - 4	1
170-58804-53	190 -27	1
170-58804-57	190 -33	1
170-58804-59	190 -36	1
170-58804-67	190 -32	1
170-58804-69	190 -35	1
170-58804-951	191 -56	REF
170-58804-951	190 - 6	1
170-58804-953	190 -18	1
170-58804-961	190 -39	1
170-58804-963	190 -38	1
170-58804-966	190 -	
170-58805-31	191 -46	1
170-58805-61	219 -31	REF
170-58805-61	190 - 7	1
170-58805-951	191 -47	1
170-58805-953	190 - 9	1
170-58805-955	190 -17	1
170-58807-27	189 -11	1
170-58814-19	210 -55	1
170-58814-35	208 -11	1
170-58814-49	208 - 6	1
170-58814-51	208 - 9	1
170-58814-57	208 -29	1
170-58814-61	210 -25	1
170-58815-951	201 -50	1
170-58815-953	201 -52	1
170-61025	299 -65	REF
170-61025	40 -12	2
170-61026	299 -66	REF
170-61026	40 - 6	1
170-61027	299 - 1	1
170-61028	299 -	1
170-61029-13	299 -12	1
170-61029-25	299 -42	1
170-61029-29	299 -48	1
170-61029-9	299 -28	1

PART NUMBER	FIGURE AND INDEX NUMBER	QUANTITY
170-61029-951	299 -21	1
170-61029-953	299 -36	1
170-61029-955	299 -16	1
170-61029-957	299 -35	1
170-61029-959	299 -38	1
170-61029-961	299 -47	1
170-61029-965	299 -40	1
170-61029-971	299 -	1
170-61029-973	299 -50	1
170-61029-975	299 -44	1
170-61029-977	299 -46	1
170-61030	298 -	REF
170-61030	299 -	NP
170-61031	39 -	1
170-61032	39 -	1
170-61033	299 -18	1
170-61035	299 -31	
	299 -	3
170-63205-11	262 -	1
170-63205-12	262 -	1
170-63206	262 -30	2
170-63207	262 -34	2
170-63208	262 -31	2
170-63209	262 -32	2
170-63210	262 -	2
170-63210-3	262 -36	2
170-63211	262 -35	2
170-63212	262 -37	2
170-63222	311 -16	2
170-68002	310 - 1	REF
170-68002	309 -	8
170-68004	309 -52	8
170-68005	309 - 7	8
170-68006	309 -32	8
170-68007	309 - 6	8
170-68009	309 - 8	8
170-68010	309 -	8
170-68701-50	1 -	REF
	262 -	
170-68701-50	261 -	NP
170-68706	262 -47	2
170-68707-11	262 - 4	3
170-68707-12	262 -	3
170-68707-15	262 - 5	1
170-68707-16	262 -	1
170-68707-7	262 -10	8
170-68707-9	262 -	8
170-68708-1	262 - 6	4
170-68708-2	262 -	4
170-68710	262 - 7	8
170-68711	262 - 9	8
170-68712-1	262 -13	3
170-68712-2	262 -	3
170-68712-5	262 -14	1
170-68712-6	262 -	1
170-68713	262 -20	8
170-68714	262 -21	8
170-68715	262 -23	8
170-68716	17 - 5	1
170-68717	17 -	1
170-68717-3	17 -	1
170-68717-5	262 -52	REF
170-68717-5	17 - 1	1
170-68718	17 -	1
170-68719	262 -53	REF
170-68719	17 -11	1
170-68720	261 -45	1
170-68721	261 -57	REF

PART NUMBER	FIGURE AND INDEX NUMBER	QUANTITY
170-68721	36 -	1
170-68721-11	36 -22	1
170-68722	261 -56	REF
170-68722	51 -57	1
170-68723-10	261 -33	1
170-68724	261 -40	1
170-68726	261 -55	REF
170-68726	51 -15	1
170-68728	261 -21	1
170-68729	261 -53	REF
170-68729	40 -	1
170-68729-7	40 -15	1
170-68730	261 - 3	1
170-68731	261 - 5	1
170-68732	261 - 4	1
170-68737	261 -	1
170-68737-3	261 -51	1
170-68738	261 -	1
170-68738-3	261 -38	1
170-68740	262 -25	2
170-68741	17 -24	2
170-68742	261 -43	1
170-68743-10	262 -26	2
170-68746	128 - 4	1
170-68747	125 -11	1
170-68748	261 -50	1
170-68750	261 -13	1
170-68751-3	261 -11	1
170-68751-5	261 -32	1
170-68753	39 -	1
170-68754	262 -40	2
170-68755	262 -41	2
170-68756	262 -42	2
170-68757	262 -43	2
170-68758	262 -	2
170-68759	262 -27	2
170-68767	262 -44	2
170-68768	262 -45	2
170-68786	262 -	1
170-68786-3	262 -	1
170-68787	262 - 1	1
170-68787-3	262 -	1
170-71001	1 -	REF
170-71001	290 -	NP
170-71011	29 - 1	REF
170-71011	291 -	NP
170-71031	36 -	REF
	289 -	
	296 -	
170-71031	288 -	NP
170-71031-950	165 -26	
	288 -	3
170-73071	307 -	1
170-73071-13	307 -24	1
170-73071-15	307 -	1
170-73071-950	307 -20	1
170-73071-952	307 -	1
170-73072	307 -	1
170-73072-19	307 -18	1
170-73072-21	307 -17	1
170-73072-29	307 -	4
170-73073	307 -44	1
170-74013	292 -33	2
170-74013-3	292 -	2
170-74014	293A-	1
170-74014-3	293A-23	1
170-74019	292 -	
	292 -	

PART NUMBER	FIGURE AND INDEX NUMBER	QUANTITY
170-74019	292 -	3
170-74020	292 -	
	292 -13	2
170-74021-1	292 - 5	1
170-74021-2	292 -	1
170-74022	50 - 1	1
170-74023	292 - 6	1
170-74024	292 -51	REF
170-74024	47 - 5	1
170-74025	47 -76	REF
	292 -52	
170-74025	39 -18	1
170-74026-1	293 -15	1
170-74026-2	293 -	1
170-74027-1	47 -75	REF
170-74027-1	39 -25	1
170-74027-2	47 -22	1
170-74028	39 -26	1
170-74029-950	292 -	1
170-74030	47 -15	1
170-74032	292 -25	1
170-74033	42A- 6	1
170-74034-1	39 - 7	1
170-74034-2	39 -	1
170-74037	42A-12	1
170-74038	42A-	1
170-74038-3	42A-11	1
170-74039	293 - 7	1
170-74040	293 - 8	1
170-74045	292 -12	1
170-74049	292 - 7	1
170-74056	292 -20	1
170-74058	292 -17	1
170-74059	292 -18	2
170-74060	292 -	4
170-74062	292 -	1
170-74064	293A- 9	
	293A-	3
170-74064-3	293A-	1
170-74065	293A-10	1
170-74066	293A-	1
170-74066-3	293A-	1
170-74067-1	47 -25	1
170-74067-2	47 -26	1
170-74068	142 -23	1
170-74069	293 -29	1
170-74076	293A-11	1
170-74081	292 -	1
170-74082	292 -	1
170-74082-3	292 -22	1
170-74082-5	292 -23	1
170-74083	292 -21	1
170-74084	292 -	4
170-74085-100	292 -28	1
170-74085-125	292 -	1
170-74085-17	292 -	1
170-74085-21	292 -	8
170-74085-25	292 -	1
170-74085-27	292 -	1
170-74085-800	292 -	1
171-14261-1	15 -52	1
172-14049-3	2 -29	REF
172-14049-3	11 - 8	1
172-14049-4	11 -	1
172-14229	16 -	2
172-14711-1	16 -	REF
	17 -	
172-14711-10	15 -	1

PART NUMBER	FIGURE AND INDEX NUMBER	QUANTITY
172-14711-11	15 -38	1
172-14711-113	16 - 7	
	16 - 8	4
172-14711-115	16 -	
	16 -	4
172-14711-12	15 -	1
172-14711-13	15 -39	1
172-14711-14	15 -	1
172-14711-15	15 -41	1
172-14711-16	15 -	1
172-14711-17	15 -40	1
172-14711-18	15 -	1
172-14711-181	16 -	1
172-14711-182	16 -	1
172-14711-183	16 -	2
172-14711-189	16 -21	1
172-14711-19	15 -43	1
172-14711-190	16 -	1
172-14711-191	16 -	2
172-14711-199	16 -	4
172-14711-2	16 -	REF
	17 -	
172-14711-20	15 -	1
172-14711-200	16 -	4
172-14711-21	15 -42	1
172-14711-22	15 -	1
172-14711-25	15 -	2
172-14711-27	16 - 3	1
172-14711-28	16 -	1
172-14711-3	15 -55	REF
172-14711-3	16 - 1	
	16 -	1
172-14711-39	15 -34	2
172-14711-4	16 -	
	16 -	1
172-14711-43	16 -22	
	16 -24	4
172-14711-45	16 -	
	16 -	4
172-14711-5	16 - 2	1
172-14711-51	16 -	2
172-14711-53	7 -31	REF
172-14711-53	16 -18	2
172-14711-55	15 - 4	2
172-14711-57	15 - 4	
172-14711-6	16 -	1
172-14711-65	16 - 23	1
172-14711-67	16 -	1
172-14711-7	15 - 37	
	15 -	1
172-14711-71	16 -	1
172-14711-73	16 -	1
172-14711-74	16 -	1
172-14711-75	16 - 13	1
172-14711-76	16 -	1
172-14711-77	16 -	2
172-14711-79	16 - 11	1
172-14711-8	15 -	
	15 -	1
172-14711-80	16 -	1
172-14711-81	7 - 30	REF
172-14711-81	16 - 12	1
172-14711-82	16 -	1
172-14711-851	8 - 1	REF
172-14711-851	15 -	1
172-14711-852	8 -	REF
172-14711-852	15 -	1
172-14711-9	15 - 36	1
172-14711-951	16 - 15	1

PART NUMBER	FIGURE AND INDEX NUMBER	QUANTITY
172-14711-952	16 -	1
172-14711-953	16 -	2
172-14711-959	16 - 4	
	16 -	4
172-14711-961	16 - 6	
	16 -	2
172-14711-962	16 -	
	16 -	2
172-14711-969	16 - 9	1
172-14711-970	16 -	1
172-14711-971	15 - 6	1
172-14711-972	15 -	1
172-14711-975	16 -	1
172-14711-976	16 -	1
172-14711-977	15 -	1
172-14711-978	15 -	1
172-14711-979	16 -	1
172-14711-980	16 -	1
172-14711-981	16 -	1
172-14711-982	16 -	1
172-14711-983	16 -	1
172-14711-984	16 -	1
172-14711-987	16 -	1
172-14711-988	16 -	1
172-14711-989	16 -	1
172-14711-990	16 -	1
172-14712-10	15 -	1
172-14712-103	15 -	
	19 -	2
172-14712-104	15 -	
	19 -	2
172-14712-109	15 - 3	
	19 - 2	2
172-14712-11	15 -11	1
172-14712-110	15 -	
	19 -	2
172-14712-12	15 -	1
172-14712-15	15 -12	1
172-14712-16	15 -	1
172-14712-17	15 -13	1
172-14712-18	15 -	1
172-14712-19	15 -14	1
172-14712-20	15 -	1
172-14712-21	15 -15	1
172-14712-22	15 -	1
172-14712-23	15 -16	1
172-14712-24	15 -	1
172-14712-25	15 -17	1
172-14712-26	15 -	1
172-14712-27	15 -19	1
172-14712-28	15 -	1
172-14712-29	15 -20	1
172-14712-3	15 - 1	
	19 - 1	2
172-14712-30	15 -	1
172-14712-31	15 -21	1
172-14712-32	15 -	1
172-14712-33	15 -	1
172-14712-34	15 -	1
172-14712-35	15 -24	1
172-14712-36	15 -	1
172-14712-39	15 -25	1
172-14712-4	15 -	
	19 -	2
172-14712-40	15 -	1
172-14712-41	15 -26	1
172-14712-42	15 -	1
172-14712-43	15 -27	1

PART 5
NUMERICAL PART LIST

PART NUMBER	FIGURE AND INDEX NUMBER	QUANTITY
172-14712-44	15 -	1
172-14712-47	15 -28	1
172-14712-48	15 -	1
172-14712-49	15 -29	1
172-14712-5	15 - 5	1
172-14712-50	15 -	1
172-14712-53	15 -30	1
172-14712-54	15 -	1
172-14712-55	15 -31	1
172-14712-56	15 -	1
172-14712-57	15 -	
	15 -32	3
172-14712-58	15 -	1
172-14712-6	15 -	1
172-14712-61	15 -33	1
172-14712-62	15 -	1
172-14712-63	15 -35	1
172-14712-64	15 -	1
172-14712-69	15 - 7	
	19 -	2
172-14712-7	15 -	
	19 - 4	2
172-14712-70	15 -	
	19 -	2
172-14712-8	15 -	
	19 -	2
172-14712-81	15 -	
	15 -22	2
172-14712-82	15 -	
	15 -	2
172-14712-83	15 -	1
172-14712-84	15 -	1
172-14712-9	15 -10	1
172-14712-951	15 -	1
172-14712-952	15 -	1
172-14712-953	15 -	1
172-14712-954	15 -	1
172-14712-955	15 -	1
172-14712-956	15 -	1
172-14712-961	15 -	1
172-14712-962	15 -	1
172-14712-963	15 -	1
172-14712-964	15 -	1
172-14712-965	19 - 3	1
172-14712-966	19 -	1
172-14712-97	15 -	1
172-14712-98	15 -	1
172-14713-1	6 - 6	REF
	171 -	
172-14713-1	22 -	1
172-14713-11	22 -	1
172-14713-12	22 -	1
172-14713-13	22 -	1
172-14713-14	22 - 5	1
172-14713-15	22 - 6	2
172-14713-17	22 - 7	1
172-14713-19	22 -	1
172-14713-2	6 -	REF
	171 -	
172-14713-2	22 -	1
172-14713-3	22 - 1	1
172-14713-4	22 - 2	1
172-14713-5	22 - 3	4
172-14713-7	22 -	2
172-14713-801	22 -	1
172-14713-802	22 -	1
172-14713-809	22 -	
172-14713-810	22 -	

PART NUMBER	FIGURE AND INDEX NUMBER	QUANTITY
172-14713-9	22 - 4	2
172-14713-951	22 - 8	
	22 -11	3
172-14713-953	22 -12	1
172-14713-955	22 -10	1
172-14713-957	22 -	1
172-14713-959	22 - 9	1
172-14713-961	22 -	1
172-14713-962	22 -	1
172-14713-963	22 -	2
172-14713-965	22 -	2
172-14713-969	22 -	1
172-14732-1	12 - 6	1
172-14732-2	12 -	1
172-14736	12 -23	2
172-14742-1	14 - 4	1
172-14742-2	14 -	1
172-22100	28 -	2
172-22100-801	28 -	
172-23018	29 -18	1
172-23018-11	29 -	1
172-23018-15	29 -	1
172-23018-16	29 -	1
172-23018-7	29 -	1
172-23018-801	29 -	1
172-23018-803	29 -	1
172-23018-9	29 -	1
172-23018-951	29 -	1
172-23018-953	29 -	1
172-24516	174 -13	REF
172-24516	30 -54	1
172-24517	30 -51	1
172-24517-3	30 -	1
172-24518	30 -52	1
172-24518-3	30 -	1
172-31003	45 -	1
172-31004-67	34 -30	1
172-31004-68	34 -	1
172-31004-69	34 -31	4
172-31004-810	32 - 3	REF
172-31004-810	34 -	1
172-31004-91	34 -32	2
172-31004-93	34 -50	1
172-31004-951	34 -	2
172-31004-952	34 -	2
172-31004-953	34 - 1	1
172-31004-99	34 -49	1
172-31005	45 - 5	1
172-31005-10	45 -	1
172-31006	32 -11	1
172-31006-3	32 -	1
172-31006-5	32 -	1
172-31020-1	77 -	1
172-31020-2	77 -	1
172-31020-3	77 -39	1
172-31020-4	77 -	1
172-31021	77 -40	2
172-31024	34 -34	1
172-31025	62 -77	1
172-31032-1	52 -	1
172-31032-2	52 -	1
172-31032-3	52 - 2	1
172-31032-4	52 -	1
172-31032-5	52 -	1
172-31032-6	52 -	1
172-31033-11	54 -37	1
172-31033-12	54 -	1
172-31033-801	54 -	1

PART NUMBER	FIGURE AND INDEX NUMBER	QUANTITY
172-14711-11	15 -38	1
172-14711-113	16 - 7	
	16 - 8	4
172-14711-115	16 -	
	16 -	4
172-14711-12	15 -	1
172-14711-13	15 -39	1
172-14711-14	15 -	1
172-14711-15	15 -41	1
172-14711-16	15 -	1
172-14711-17	15 -40	1
172-14711-18	15 -	1
172-14711-181	16 -	1
172-14711-182	16 -	1
172-14711-183	16 -	2
172-14711-189	16 -21	1
172-14711-19	15 -43	1
172-14711-190	16 -	1
172-14711-191	16 -	2
172-14711-199	16 -	4
172-14711-2	16 -	REF
	17 -	
172-14711-20	15 -	1
172-14711-200	16 -	4
172-14711-21	15 -42	1
172-14711-22	15 -	1
172-14711-25	15 -	2
172-14711-27	16 - 3	1
172-14711-28	16 -	1
172-14711-3	15 -55	REF
172-14711-3	16 - 1	
	16 -	1
172-14711-39	15 -34	2
172-14711-4	16 -	
	16 -	1
172-14711-43	16 -22	
	16 -24	4
172-14711-45	16 -	
	16 -	4
172-14711-5	16 - 2	1
172-14711-51	16 -	2
172-14711-53	7 -31	REF
172-14711-53	16 -18	2
172-14711-55	15 - 4	2
172-14711-6	16 -	1
172-14711-65	16 -23	1
172-14711-67	16 -	1
172-14711-7	15 -37	
	15 -	1
172-14711-71	16 -	1
172-14711-73	16 -	1
172-14711-74	16 -	1
172-14711-75	16 -13	1
172-14711-76	16 -	1
172-14711-77	16 -	2
172-14711-79	16 -11	1
172-14711-8	15 -	
	15 -	1
172-14711-80	16 -	1
172-14711-81	7 -30	REF
172-14711-81	16 -12	1
172-14711-82	16 -	1
172-14711-851	8 - 1	REF
172-14711-851	15 -	1
172-14711-852	8 -	REF
172-14711-852	15 -	1
172-14711-9	15 -36	1
172-14711-951	16 -15	1

PART NUMBER	FIGURE AND INDEX NUMBER	QUANTITY
172-14711-952	16 -	1
172-14711-953	16 -	2
172-14711-959	16 - 4	
	16 -	4
172-14711-961	16 - 6	
	16 -	2
172-14711-962	16 -	
	16 -	2
172-14711-969	16 - 9	1
172-14711-970	16 -	1
172-14711-971	15 - 6	1
172-14711-972	15 -	1
172-14711-975	16 -	1
172-14711-976	16 -	1
172-14711-977	15 -	1
172-14711-978	15 -	1
172-14711-979	16 -	1
172-14711-980	16 -	1
172-14711-981	16 -	1
172-14711-982	16 -	1
172-14711-983	16 -	1
172-14711-984	16 -	1
172-14711-987	16 -	1
172-14711-988	16 -	1
172-14711-989	16 -	1
172-14711-990	16 -	1
172-14712-10	15 -	1
172-14712-103	15 -	
	19 -	2
172-14712-104	15 -	
	19 -	2
172-14712-109	15 - 3	
	19 - 2	2
172-14712-11	15 -11	1
172-14712-110	15 -	
	19 -	2
172-14712-12	15 -	1
172-14712-15	15 -12	1
172-14712-16	15 -	1
172-14712-17	15 -13	1
172-14712-18	15 -	1
172-14712-19	15 -14	1
172-14712-20	15 -	1
172-14712-21	15 -15	1
172-14712-22	15 -	1
172-14712-23	15 -16	1
172-14712-24	15 -	1
172-14712-25	15 -17	1
172-14712-26	15 -	1
172-14712-27	15 -19	1
172-14712-28	15 -	1
172-14712-29	15 -20	1
172-14712-3	15 - 1	
	19 - 1	2
172-14712-30	15 -	1
172-14712-31	15 -21	1
172-14712-32	15 -	1
172-14712-33	15 -	1
172-14712-34	15 -	1
172-14712-35	15 -24	1
172-14712-36	15 -	1
172-14712-39	15 -25	1
172-14712-4	15 -	
	19 -	2
172-14712-40	15 -	1
172-14712-41	15 -26	1
172-14712-42	15 -	1
172-14712-43	15 -27	1

PART NUMBER	FIGURE AND INDEX NUMBER	QUANTITY
172-14712-44	15 -	1
172-14712-47	15 -28	1
172-14712-48	15 -	1
172-14712-49	15 -29	1
172-14712-5	15 - 5	1
172-14712-50	15 -	1
172-14712-53	15 -30	1
172-14712-54	15 -	1
172-14712-55	15 -31	1
172-14712-56	15 -	1
172-14712-57	15 -	
	15 -32	3
172-14712-58	15 -	1
172-14712-6	15 -	1
172-14712-61	15 -33	1
172-14712-62	15 -	1
172-14712-63	15 -35	1
172-14712-64	15 -	1
172-14712-69	15 - 7	
	19 -	2
172-14712-7	15 -	
	19 - 4	2
172-14712-70	15 -	
	19 -	2
172-14712-8	15 -	
	19 -	2
172-14712-81	15 -	
	15 -22	2
172-14712-82	15 -	
	15 -	2
172-14712-83	15 -	1
172-14712-84	15 -	1
172-14712-9	15 -10	1
172-14712-951	15 -	1
172-14712-952	15 -	1
172-14712-953	15 -	1
172-14712-954	15 -	1
172-14712-955	15 -	1
172-14712-956	15 -	1
172-14712-961	15 -	1
172-14712-962	15 -	1
172-14712-963	15 -	1
172-14712-964	15 -	1
172-14712-965	19 - 3	1
172-14712-966	19 -	1
172-14712-97	15 -	1
172-14712-98	15 -	1
172-14713-1	6 - 6	REF
	171 -	
172-14713-1	22 -	1
172-14713-11	22 -	1
172-14713-12	22 -	1
172-14713-13	22 -	1
172-14713-14	22 - 5	1
172-14713-15	22 - 6	2
172-14713-17	22 - 7	1
172-14713-19	22 -	1
172-14713-2	6 -	REF
	171 -	
172-14713-2	22 -	1
172-14713-3	22 - 1	1
172-14713-4	22 - 2	1
172-14713-5	22 - 3	4
172-14713-7	22 -	2
172-14713-801	22 -	1
172-14713-802	22 -	1
172-14713-809	22 -	
172-14713-810	22 -	

PART NUMBER	FIGURE AND INDEX NUMBER	QUANTITY
172-14713-9	22 - 4	2
172-14713-951	22 - 8	
	22 -11	3
172-14713-953	22 -12	1
172-14713-955	22 -10	1
172-14713-957	22 -	1
172-14713-959	22 - 9	1
172-14713-961	22 -	1
172-14713-962	22 -	1
172-14713-963	22 -	2
172-14713-965	22 -	2
172-14713-969	22 -	1
172-14732-1	12 - 6	1
172-14732-2	12 -	1
172-14736	12 -23	2
172-14742-1	14 - 4	1
172-14742-2	14 -	1
172-22100	28 -	2
172-22100-801	28 -	
172-23018	29 -18	1
172-23018-11	29 -	1
172-23018-15	29 -	1
172-23018-16	29 -	1
172-23018-7	29 -	1
172-23018-801	29 -	1
172-23018-803	29 -	1
172-23018-9	29 -	1
172-23018-951	29 -	1
172-23018-953	29 -	1
172-24516	174 -13	REF
172-24516	30 -54	1
172-24517	30 -51	1
172-24517-3	30 -	1
172-24518	30 -52	1
172-24518-3	30 -	1
172-31003	45 -	1
172-31004-67	34 -30	1
172-31004-68	34 -	1
172-31004-69	34 -31	4
172-31004-810	32 - 3	REF
172-31004-810	34 -	1
172-31004-91	34 -32	2
172-31004-93	34 -50	1
172-31004-951	34 -	2
172-31004-952	34 -	2
172-31004-953	34 - 1	1
172-31004-99	34 -49	1
172-31005	45 - 5	1
172-31005-10	45 -	1
172-31006	32 -11	1
172-31006-3	32 -	1
172-31006-5	32 -	1
172-31020-1	77 -	1
172-31020-2	77 -	1
172-31020-3	77 -39	1
172-31020-4	77 -	1
172-31021	77 -40	2
172-31024	34 -34	1
172-31025	62 -77	1
172-31032-1	52 -	1
172-31032-2	52 -	1
172-31032-3	52 - 2	1
172-31032-4	52 -	1
172-31032-5	52 -	1
172-31032-6	52 -	1
172-31033-11	54 -37	1
172-31033-12	54 -	1
172-31033-801	54 -	1

PART NUMBER	FIGURE AND INDEX NUMBER	QUANTITY
172-31033-802	54 -	1
172-31034-1	52 -12	1
172-31034-2	52 -20	1
172-31053	32 -17	1
172-31054	32 -18	1
172-31107-101	39 - 6	1
172-31107-102	39 -	1
172-31107-109	39 -	1
172-31107-132	39 -	1
172-31107-141	51 -60	REF
172-31107-141	39 -	1
172-31107-27	39 -	1
172-31107-29	39 -	1
172-31107-30	39 -	1
172-31107-59	39 -	1
172-31107-68	39 -	1
172-31107-72	39 - 9	1
172-31107-74	39 -	1
172-31107-77	39 -	1
172-31107-78	39 -	1
172-31107-79	39 -	1
172-31107-80	39 -	1
172-31107-801	39 -	1
172-31107-802	39 -	1
172-31107-803	39 -	1
172-31107-83	39 -	1
172-31107-901	39 -	1
172-31107-902	39 -	1
172-31107-951	39 -	2
172-31118	39 - 4	REF
172-31118	41 -	1
172-31118-11	41 - 9	1
172-31118-13	41 -43	1
172-31118-14	41 -	1
172-31118-15	41 -29	1
172-31118-17	41 -42	1
172-31118-21	41 - 5	1
172-31118-22	41 - 6	1
172-31118-23	41 -	1
172-31118-24	41 - 4	1
172-31118-25	41 -10	2
172-31118-27	41 -11	1
172-31118-28	41 -	1
172-31118-3	41 - 1	1
172-31118-31	41 -	1
172-31118-32	41 -	1
172-31118-5	41 - 7	1
172-31118-6	41 -	1
172-31118-7	41 - 2	1
172-31118-8	41 - 3	1
172-31118-800	41 -	1
172-31125-11	40 -21	1
172-31125-2	40 -	1
172-31151-13	37 -51	1
172-31151-21	38A-19	1
172-31151-22	38A-	1
172-31151-25	38 -	1
172-31151-27	38A-	4
172-31151-29	38 -49	2
172-31151-3	38A-22	1
172-31151-35	36 - 3	REF
	38 -	
	38A-	
172-31151-35	37 -	1
172-31151-4	38A-	1
172-31151-5	38 -19	1
172-31151-6	38 -23	1
172-31151-800	37 -	1

PART NUMBER	FIGURE AND INDEX NUMBER	QUANTITY
172-31151-805	37 -	1
172-31257	62 -	
	63 -	2
172-31273-21	32 -16	1
172-31273-22	32 -	1
172-31285-1	62 -30	1
172-31293	36 -	1
172-31293-11	36 -48	1
172-31293-13	36 -	1
172-31293-15	36 -49	1
172-31293-9	36 -	1
172-31294-1	34 -	1
172-31294-2	34 -	1
172-31294-3	34 -24	2
172-31294-5	34 -23	2
172-31295-1	34 -	1
172-31295-13	34 -	2
172-31295-2	34 -	1
172-31295-3	34 - 9	1
172-31295-4	34 -	1
172-31295-5	34 -12	2
172-31295-7	34 -10	1
172-31295-8	34 -	1
172-31295-9	34 -11	2
172-31296-1	34 -21	1
172-31296-2	34 -	1
172-31297	34 -16	2
172-31381-2	74 -	REF
172-31381-2	79 -	NP
172-31381-801	74 -	REF
172-31381-801	79 -	NP
172-31381-802	79 -	NP
172-31381-803	79 -	NP
172-31381-804	79 -	NP
172-31382-10	79 -	1
172-31382-101	79 - 6	1
172-31382-11	79 - 8	1
172-31382-12	79 -	1
172-31382-13	79 -10	1
172-31382-14	79 -	1
172-31382-15	79 - 1	1
172-31382-16	79 -	1
172-31382-17	79 - 2	1
172-31382-19	79 - 3	1
172-31382-2	79 -	1
172-31382-20	79 -	1
172-31382-21	79 - 4	1
172-31382-22	79 -	1
172-31382-23	79 -11	1
172-31382-24	79 -	1
172-31382-25	79 -	1
172-31382-27	79 -	1
172-31382-29	79 -13	1
172-31382-30	79 -	1
172-31382-33	79 -16	1
172-31382-34	79 -	1
172-31382-35	79 -15	1
172-31382-36	79 -	1
172-31382-37	79 -14	1
172-31382-38	79 -	1
172-31382-4	79 -	1
172-31382-40	79 -26	1
172-31382-5	79 - 7	1
172-31382-54	79 -25	1
172-31382-6	79 -	1
172-31382-7	79 - 5	1
172-31382-8	79 -	1
172-31382-801	79 -	1

PART NUMBER	FIGURE AND INDEX NUMBER	QUANTITY
172-31382-802	79 -	1
172-31382-803	79 -	1
172-31382-804	79 -	1
172-31382-806	79 -	1
172-31382-9	79 - 9	1
172-31382-952	79 -27	1
172-31403-1	37 -	1
172-31403-2	37 -	1
172-31403-3	37 - 2	1
172-31409	37 -	1
172-31409-11	37 -	1
172-31409-3	37 -33	1
172-31409-5	37 -	1
172-31409-7	37 -	1
172-31409-8	37 -	1
172-31409-9	37 -	2
172-31410	37 -	1
172-31410-3	37 -35	1
172-31410-5	37 -	1
172-31410-7	37 -	2
172-31410-9	37 -	2
172-31415	37 -	1
172-31416-1	37 -16	1
172-31416-2	37 -	1
172-31417-1	37 -19	1
172-31417-2	37 -	1
172-31418-1	37 -17	1
172-31418-2	37 -	1
172-31419-1	37 -18	1
172-31419-2	37 -	1
172-31422	38 - 3	1
172-31422-17	38 -	1
172-31422-3	38 -	1
172-31422-5	38 -	1
172-31422-7	38 -	1
172-31422-800	38 -	1
172-31422-805	38 -	1
172-31422-950	38 -	1
172-31422-953	38 -	1
172-31424	37 -20	1
172-31504-10	59 -	1
172-31504-11	59 -11	1
172-31504-12	59 -12	1
172-31504-13	59 - 8	1
172-31504-17	59 - 3	1
172-31504-19	59 -14	1
172-31504-20	59 -	1
172-31504-21	59 -	1
172-31504-23	59 -	1
172-31504-25	59 -13	1
172-31504-26	59 -	1
172-31504-27	59 - 6	1
172-31504-29	59 -	1
172-31504-3	59 - 2	1
172-31504-33	59 - 7	1
172-31504-35	59 - 5	1
172-31504-37	59 -	1
172-31504-39	59 -46	1
172-31504-41	59 -47	1
172-31504-43	59 - 4	1
172-31504-5	59 - 1	1
172-31504-7	59 -18	1
172-31504-800	58 - 1	REF
172-31504-800	59 -	1
172-31504-9	59 -10	1
172-31505	58 -	1
172-31505-11	58 -19	1
172-31505-12	58 -20	1

PART NUMBER	FIGURE AND INDEX NUMBER	QUANTITY
172-31505-13	58 - 3	2
172-31505-15	58 - 2	1
172-31505-17	58 -22	1
172-31505-18	58 -	1
172-31505-19	58 -21	1
172-31505-20	58 -	1
172-31505-21	58 -23	1
172-31505-22	58 -	1
172-31505-23	58 - 4	1
172-31505-25	58 -15	1
172-31505-27	58 -14	1
172-31505-3	58 - 5	1
172-31505-31	58 - 8	1
172-31505-33	58 -12	1
172-31505-34	58 -	1
172-31505-35	58 -	1
172-31505-37	58 -10	1
172-31505-38	58 -	1
172-31505-39	58 - 9	1
172-31505-40	58 -	1
172-31505-43	58 -25	1
172-31505-44	58 -	1
172-31505-45	58 -11	4
172-31505-47	58 -24	1
172-31505-48	58 -	1
172-31505-49	58 -17	1
172-31505-5	58 - 6	1
172-31505-50	58 -	1
172-31505-53	58 -18	2
172-31505-7	58 - 7	1
172-31505-9	58 -16	1
172-31543	62 -64	1
172-31543-800	62 -	1
172-31627-1	51 -31	1
172-31627-2	51 -	1
172-31803	38A-17	1
172-31804-1	38A-16	1
172-31804-2	38A-	1
172-31805	38 -18	2
172-31816-1	71 -	1
172-31816-2	71 -	1
172-31823-802	36 -	REF
172-31823-802	142 -	1
172-31823-804	142 -	1
172-31826-1	67 - 6	1
172-31826-2	67 -	1
172-31842	71 -	2
172-31853	40 -43	REF
172-31853	48 -12	2
172-31854	48 -	2
172-31855	40 -33	2
172-31856-1	37 - 6	1
172-31856-2	37 -	1
172-31861-11	67 -48	1
172-31861-13	67 -41	1
172-31861-3	67 -40	1
172-31861-4	67 -	1
172-31861-40	37 - 1	REF
172-31861-40	67 -	1
172-31861-5	67 -51	1
172-31861-6	67 -52	1
172-31861-7	67 -46	2
172-31861-9	67 -47	1
172-31862-3	67 -37	1
172-31862-4	67 -	1
172-31862-50	67 -	1
172-31862-951	67 -	AR
172-31864-10	67 -30	1

PART NUMBER	FIGURE AND INDEX NUMBER	QUANTITY
172-31865-17	67 - 7	1
172-31865-18	67 -	1
172-31866-1	67 - 8	1
172-31866-2	67 -	1
172-31867	67 - 1	1
172-31868-1	67 - 2	1
172-31868-2	67 -	1
172-31869-1	67 -	1
172-31869-2	67 -	1
172-31869-3	67 - 3	1
172-31869-4	67 -	1
172-31870-1	67 - 5	1
172-31870-2	67 -	1
172-31871-1	67 - 9	1
172-31871-2	67 -	1
172-31879	67 -42	1
172-31880	68 -	1
172-31880-3	68 -14	1
172-31880-5	68 -13	1
172-31892	302 -	1
172-31893	38 -	2
172-31894-10	69 -24	1
172-31897	47 -65	1
172-33360-3	93 -15	4
172-33612	100 -11	1
172-33615	100 - 7	1
172-33615-11	100 -	1
172-33616	100 -10	1
172-34185-7	86 - 3	1
172-34185-9	86 - 4	1
172-43047	112 -30	2
172-43048	112 -18	1
172-43049	112 -17	1
172-43050	112 -	1
172-43050-800	112 -	1
172-43052	116 -28	1
172-43053	116 -24	1
172-43054	116 -34	1
172-43059	116 -13	1
172-43060	116 -26	1
172-43062	116 -33	1
172-43067	116 -38	1
172-43069-3	114 - 1	REF
172-43069-3	116 -	1
172-43069-803	116 -	1
172-43069-805	116 -	
172-43069-813	116 -	1
172-43070	116 -17	1
172-43073	116 -39	1
172-43074	116 -30	1
172-43075	116 -32	1
172-43079	116 -	1
172-43080-802	113 -29	
	114 -30	2
172-43082	116 - 8	1
172-43086	116 - 7	1
172-46004	73 -	1
172-46005	74 -31	1
172-47007	270 -13	1
172-47012	270 - 1	1
172-47015	270 -16	1
172-47021	63 -46	1
172-47021-3	63 -	1
172-47021-5	63 -	1
172-47064	269 -	NP
172-47066	269 -	1
172-47066-3	269 - 7	1
172-47066-5	269 -	1

PART NUMBER	FIGURE AND INDEX NUMBER	QUANTITY
172-47068-13	269 -	2
172-47068-5	269 -	2
172-47068-7	269 -18	2
172-47069	269 - 8	1
172-47070	269 -	1
172-47070-3	269 -11	1
172-47070-5	269 -	1
172-47071	269 -12	1
172-47075	270 -11	1
172-47076	270 - 6	1
172-47802-19	269 -38	1
172-47802-950	269 -44	1
172-48010	244 -12	1
172-48011	247 -	2
172-48013	2 - 1	REF
172-48013	244 -	NP
172-48014-51	6 -	REF
172-48014-51	247 -	NP
172-48014-52	6 -	REF
172-48014-52	247 -	NP
172-48014-851	247 -	NP
172-48014-852	247 -	NP
172-48017	247 - 2	4
172-48022	244 - 1	REF
172-48022	245 -	1
172-48023-11	247 - 1	REF
172-48023-11	248 -	1
172-48023-12	247 -	REF
172-48023-12	248 -	1
172-48023-801	248 -	1
172-48023-802	248 -	1
172-48025	245 -28	1
172-48026	245 -30	1
172-48027	245 -29	1
172-48028	245 -	1
172-48029	244 -49	REF
172-48029	245 -25	1
172-48030	245 -42	
	248 -47	10
172-48032	249 -	1
172-48032-10	249 -	1
172-48032-3	249 - 1	1
172-48032-801	249 -	1
172-48032-9	249 - 2	1
172-48047-1	251 - 2	1
172-48047-2	251 - 3	1
172-48052-11	252 - 1	REF
172-48052-11	249 -	1
172-48052-801	249 -	1
172-48058	252 -73	REF
172-48058	249 -43	1
172-48072	256 - 9	2
172-48091	249 -40	2
172-48097	252 -63	2
172-48098	252 -64	2
172-48099	252 -65	2
172-48107-1	248 -50	REF
172-48107-1	246 -	2
172-48107-11	246 -	2
172-48107-12	246 -	2
172-48107-2	246 -	2
172-48107-3	246 - 3	4
172-48107-7	246 -	4
172-48108	248 -23	2
172-48110	246 - 6	4
172-48111	247 -	6
172-48112-3	248 -	4
172-48112-5	245 -17	

PART NUMBER	FIGURE AND INDEX NUMBER	QUANTITY
172-48112-5	248 -22	9
172-48136	251 -	1
172-48137	251 - 5	1
172-48138	251 - 6	1
172-48139	251 - 4	1
172-48144	249 -21	2
172-48164	256 -10	1
172-48177	249 -12	1
172-48178	252 -71	REF
172-48178	249 -	1
172-48183	252 -69	REF
172-48183	244 -10	1
172-48184	244 -	1
172-48201-1	1 -	REF
172-48201-1	264 -	NP
172-48201-2	1 -	REF
172-48201-2	264 -	NP
172-48201-913	264 -	
172-48201-914	264 -	
172-48201-916	264 -	
172-48202-101	247 -	REF
172-48202-101	258 -	NP
172-48202-102	247 -	REF
172-48202-102	258 -	NP
172-48202-803	258 -	NP
172-48202-804	258 -	NP
172-48203-51	252 -	REF
172-48203-51	257 -	NP
172-48204	258 -47	
	259 -38	
	259 -40	14
172-48206	260 - 1	2
172-48206-801	260 - 2	1
172-48206-802	260 -	1
172-48208-1	258 - 1	REF
172-48208-1	260 -	1
172-48208-2	258 -	REF
172-48208-2	260 -	1
172-48208-851	259 - 1	REF
172-48208-851	260 -	1
172-48208-852	259 -	REF
172-48208-852	260 -	1
172-48212	257 -17	1
172-48214	265 -72	REF
172-48214	258 -69	
	259 -60	4
172-48215	265 -73	REF
172-48215	258 -26	
	259 -19	4
172-48216-1	258 -70	
	259 -61	2
172-48216-2	258 -	
	259 -	2
172-48217	257 -31	1
172-48218	257 -33	1
172-48219	257 -32	1
172-48220	257 -	1
172-48221	257 -35	1
172-48222	258 -67	
	259 -58	4
172-48223	258 -24	
	259 -17	4
172-48225-1	258 -71	
	259 -62	2
172-48225-2	258 -	
	259 -	2
172-48226	258 -72	
	259 -63	4

PART NUMBER	FIGURE AND INDEX NUMBER	QUANTITY
172-48228	258 -	
	259 -	4
172-48229	258 -	
	259 -	4
172-48230	121 -	1
172-48250	265 -	2
172-48250-904	265 -	4
172-48251	265 -	REF
172-48251	266 -	2
172-48254	266 -15	2
172-48256	266 -18	2
172-48261-3	264 -24	1
172-48261-51	264 -	1
172-48261-52	264 -	1
172-48261-53	264 -21	1
172-48261-54	264 -	1
172-48261-55	264 -	1
172-48261-7	264 -18	1
172-48261-74	264 -	1
172-48261-75	264 -20	1
172-48261-76	264 -	1
172-48261-78	264 -	1
172-48261-79	264 -	1
172-48261-8	264 -	1
172-48261-80	264 -	1
172-48261-901	264 -	1
172-48261-902	264 -	1
172-48268	266 -14	2
172-48282	265 -	4
172-48284	265 -	2
172-48285	265 -	2
172-48291	266 -17	2
172-48292	266 -20	2
172-48294	264 -28	2
172-48298	266 -22	2
172-48311-3	264 - 9	1
172-48311-5	264 -10	1
172-48311-960	264 -	2
172-48337	265 -	
172-48807-951	257 -45	REF
172-48807-951	258 - 2	
	259 - 2	4
172-48808-951	258 -33	
	259 -26	2
172-48808-952	258 -	
	259 -	2
172-48810	252 -68	REF
172-48810	247 -24	1
172-48811-1	257 -46	REF
172-48811-1	258 -30	
	259 -23	2
172-48811-2	258 -	
	259 -	2
172-48812-1	260 -18	1
172-48812-2	260 -	1
172-48814-216	247 -	2
172-48814-23	257 -44	REF
172-48814-23	258 - 6	2
172-48814-41	258 -19	
	259 -12	4
172-48814-42	258 -66	
	259 -57	4
172-48814-57	247 -33	1
172-48814-58	247 -	1
172-48814-59	247 -32	2
172-48814-69	258 -43	2
172-48814-70	247 -	1
172-48814-72	258 -14	1

PART NUMBER	FIGURE AND INDEX NUMBER	QUANTITY
172-48814-73	258 -	1
172-48814-963	258 - 7	2
172-48814-965	259 -	1
172-48814-967	259 - 6	1
172-48814-981	258 -44	
	259 -36	4
172-48822	258 -59	2
172-48831-10	257 -20	1
172-48831-100	252 -17	1
172-48831-13	257 -13	1
172-48831-130	252 -50	1
172-48831-131	252 -48	1
172-48831-135	244 -46	REF
172-48831-135	253 -48	1
172-48831-14	257 - 3	1
172-48831-15	257 -10	1
172-48831-154	252 -	1
172-48831-185	253 -62	REF
172-48831-185	252 -22	1
172-48831-3	257 -30	1
172-48831-303	247 -43	REF
172-48831-303	252 -15	1
172-48831-304	252 - 2	1
172-48831-305	258 -74	REF
	259 -65	
172-48831-305	257 -15	1
172-48831-306	257 - 1	1
172-48831-307	252 -13	1
172-48831-31	252 -46	1
172-48831-4	257 -28	1
172-48831-5	257 -27	1
172-48831-54	252 - 7	1
172-48831-7	257 -21	1
172-48831-8	257 -18	1
172-48831-85	257 -25	1
172-48831-86	257 -23	1
172-48831-88	249 -46	REF
172-48831-88	252 - 9	1
172-48831-89	257 - 5	1
172-48831-9	258 -75	REF
	259 -66	
172-48831-9	257 -16	1
172-48831-94	252 - 5	1
172-48831-951	252 -26	1
172-48831-953	247 -44	REF
172-48831-953	252 -40	1
172-48831-955	256 -25	REF
172-48831-955	253 -45	1
172-48831-957	253 -	1
172-48831-959	252 -	1
172-48831-97	252 -38	1
172-48831-98	252 -29	1
172-48831-99	257 - 8	1
172-48854	249 -45	REF
172-48854	252 -11	1
172-48861	244 -45	REF
172-48861	252 -44	1
172-48862	247 -	1
172-48868	252 -19	1
172-48872	257 - 7	1
172-48873	252 -67	REF
172-48873	247 -39	1
172-48874	244 -44	REF
172-48874	253 -46	1
172-51026	141 -14	2
172-51069	40 -19	1
172-51085	141 -25	REF
172-51085	150 -	1

PART NUMBER	FIGURE AND INDEX NUMBER	QUANTITY
172-51111	140 -10	1
172-520119	138 -	1
172-520119-3	138 -	1
172-520119-5	138 -20	1
172-520121	138 -21	1
172-520122	138 -22	1
172-520165	138 -25	
	139 -39	2
172-52036	60 -16	2
172-52047	210 -	1
172-52047-13	138 -43	REF
172-52047-13	200 -	1
172-52052-103	139 -35	1
172-52052-133	138 -18	1
172-52052-147	139 - 4	1
172-52052-149	139 - 6	1
172-52052-151	139 - 9	1
172-52052-153	138 -39	REF
172-52052-153	139 - 1	1
172-52061	138 -40	REF
172-52061	39A-	1
172-52061-3	39A-15	1
172-52064	138 - 3	1
172-52065-10	138 - 1	1
172-52066	138 - 4	1
172-52067	39A-19	1
172-52071	138 -41	REF
172-52071	40 - 1	1
172-52079	79 -23	1
172-52083	138 -	1
172-52083-3	138 -28	1
172-52084	138 -34	2
172-52085	40 -42	REF
172-52085	138 -32	1
172-52088	200 - 3	
	210 - 7	2
172-52091	139 -38	1
172-52093	79 -24	1
172-52096	138 -42	REF
172-52096	51 -49	1
172-52097	138 -10	1
172-52354	125 - 3	1
172-52411-3	67 -32	1
172-52411-4	67 -	1
172-52416	136 - 8	1
172-52417	136 - 9	1
172-52418	136 -56	1
172-53027	121 -	2
172-53050-11	121 -32	1
172-53050-5	121 -	1
172-53050-801	121 -	1
172-53050-803	121 -	1
172-53050-805	121 -	1
172-53051-800	307 -49	1
172-53064-3	121 -29	1
172-53064-802	121 -19	1
172-53064-952	121 -20	1
172-53103	118 -26	1
172-53103-7	118 -27	1
172-53104	118 -31	1
172-53105	118 -29	1
172-53106	118 -	1
172-53106-802	118 -34	1
172-53107-800	118 -33	1
172-53108-1	118 -20	1
172-53108-2	118 -	1
172-53111-1	124 -	1
172-53111-2	124 -22	1

PART NUMBER	FIGURE AND INDEX NUMBER	QUANTITY
172-53112-1	124 -	1
172-53112-2	124 -23	1
172-53113-1	124 -	1
172-53113-2	124 -24	1
172-53114-1	124 -	1
172-53114-2	124 -12	1
172-53123	118 -	2
172-53123-100	118 -14	2
172-53128-7	124 -13	2
172-53128-951	124 -	1
172-53128-952	124 -	1
172-53129-11	124 -	1
172-53129-12	124 -	1
172-53130-803	118 - 1	REF
172-53130-803	124 -	1
172-53130-804	118 - 2	REF
172-53130-804	124 -	1
172-53130-950	124 - 5	2
172-53134-800	118 -22	1
172-53304	36 -	REF
172-53304	273 -	NP
172-53304-10	273 -	NP
172-53307	36 -	REF
172-53307	281 -	NP
172-53307-51	281 -	NP
172-53311-11	277 - 1	1
172-53311-15	277 - 3	1
172-53311-31	278 - 5	1
172-53311-37	278 -10	1
172-53311-41	278 -13	1
172-53311-51	278 - 7	1
172-53311-53	276 - 9	1
172-53311-7	277 -10	1
172-53311-951	281 - 1	1
172-53311-953	281 -	1
172-53311-955	277 - 5	1
172-53311-957	275 - 4	1
172-53311-961	281 -	
172-53311-967	275 - 1	1
172-53318	271 -	2
172-53319	271 -11	1
172-53320	271 - 7	1
172-53321	271 - 6	1
172-53326	279 -27	REF
172-53326	67 -26	1
172-53327	279 -26	REF
172-53327	41 -20	1
172-53328	36 -47	1
172-53329	279 -18	1
172-53330	279 -15	1
172-53331	279 -16	1
172-53333	280 -	2
172-53334	273 -11	1
172-53335	53 -38	1
172-53336	273 -14	1
172-53336-10	273 -	1
172-53340	279 -	1
172-53340-3	279 -	1
172-53341-3	279 -11	1
172-53341-5	279 -10	1
172-53341-7	279 - 9	1
172-53341-961	279 - 4	1
172-53341-963	279 - 2	1
172-53342	43 -54	1
172-53343	271 -39	1
172-53344	38A-	1
172-53345	272 -56	1
172-53347	271 -45	1

PART NUMBER	FIGURE AND INDEX NUMBER	QUANTITY
172-53348	271 -	1
172-53350	272 -34	1
172-53351	272 -	1
172-53352	272 -23	1
172-53354	58 -31	1
172-53357	272 -27	1
172-53358	274 -12	REF
172-53358	272 -51	1
172-53358-7	272 -	1
172-53359	272 -	1
172-53360	59 -19	1
172-53361	271 -16	1
172-53361-950	271 -	
172-53362-10	271 -49	REF
172-53362-10	60 -47	1
172-53362-20	60 -	1
172-53363-10	277 -12	REF
	278 -50	
	285 -30	
172-53363-10	271 -32	1
172-53363-25	271 -	1
172-53364	60 -	1
172-53366	59 -50	1
172-53367	59 -	1
172-53370	272 -60	REF
172-53370	59 -	1
172-53370-11	59 -22	1
172-53370-13	59 -36	6
172-53370-15	59 -34	2
172-53370-17	59 -35	2
172-53370-23	59 -37	1
172-53370-25	59 -38	1
172-53370-27	59 -	1
172-53370-29	59 -27	1
172-53370-3	59 -24	1
172-53370-31	59 -28	1
172-53370-33	59 -29	1
172-53370-35	59 -30	1
172-53370-37	59 -26	1
172-53370-5	59 -25	1
172-53370-7	59 -33	1
172-53370-9	59 -32	1
172-53370-917	59 -	2
172-53371	59 -	1
172-53371-11	59 -44	1
172-53371-13	59 -45	1
172-53371-3	59 -40	1
172-53371-5	59 -41	1
172-53371-7	59 -42	6
172-53371-9	59 -43	4
172-53372	59 -49	1
172-53373-3	59 -	1
172-53373-5	59 -48	1
172-53374-3	272 - 3	2
172-53374-5	271 -17	2
172-53375	271 -18	
	272 - 4	7
172-53376	271 -20	
	272 - 6	
	272 -11	8
172-53377-1	59 -20	
	59 -23	8
172-53377-2	59 -21	
	59 -	8
172-53378	271 -19	
	272 - 5	7
172-53378-10	272 -10	1
172-53379	271 -	

PART NUMBER	FIGURE AND INDEX NUMBER	QUANTITY
172-53379	272 -	7
172-53379-10	272 -	1
172-53380	272 -28	1
172-53381	272 -	1
172-53382	271 -	1
172-53383	271 -	1
172-53384	271 -	1
172-53385	271 -	1
172-53386	271 -	1
172-53387-950	271 -	1
172-53388	271 -	1
172-53389-950	271 -	1
172-53394	272 -13	1
172-53395	272 -14	1
172-53396	271 -15	1
172-53397	271 -14	1
172-53398	279 -22	1
172-53399	279 -17	1
172-53400-800	271 -25	1
172-53401	71 -43	1
172-53403	59 -31	1
172-53404	275 -26	REF
172-53404	280 - 1	1
172-53407	281 -32	REF
172-53407	279 - 1	1
172-53408	278 - 1	1
172-53409	277 -	1
172-53410	278 - 3	1
172-53411	274 -13	REF
172-53411	71 -36	1
172-53413-3	37 -12	1
172-53413-5	37 -	1
172-53413-6	37 -	1
172-53414-3	37 -13	1
172-53414-6	37 -	2
172-53415	281 -27	1
172-53415-3	281 -	1
172-53415-5	281 -	1
172-53416	281 -28	1
172-53416-3	281 -	1
172-53416-5	281 -	1
172-53417	281 - 9	1
172-53420	281 -	
	281 -	2
172-53422	281 - 6	1
172-53423	281 - 8	1
172-53424-5	275 - 5	
	278 - 2	
	278 - 6	
	278 - 9	
	278 -11	
	278 -14	
	279 - 3	
	279 -	
	279 - 7	
	281 -	
	281 - 4	
	281 -	14
172-53425	273 -33	REF
172-53425	280 -	1
172-53426	298 -28	1
172-53429	280 -11	1
172-53429-11	280 -	2
172-53429-3	280 -	1
172-53432	280 -22	1
172-53433	280 -18	1
172-53434	280 -10	1
172-53436	281 -24	2

PART NUMBER	FIGURE AND INDEX NUMBER	QUANTITY
172-53437	281 -23	2
172-53438	51 -	1
172-53451-3	281 -21	1
172-53451-5	281 -	1
172-53451-51	281 -	1
172-53451-53	281 -	1
172-53451-61	281 -	1
172-53451-63	281 -	1
172-53464	271 -	1
172-54012	40 -20	1
172-54013	40 - 5	1
172-54014	40 -11	1
172-54020	158 -	1
172-54022	263 -34	2
172-54023	156 -15	1
172-54024	156 -	1
172-54025	185 -11	1
172-54028	156 - 1	REF
172-54028	179 -	1
172-54030	179 - 2	1
172-54032	179 - 3	1
172-54033	179 - 1	1
172-54034	152 - 4	1
172-54034-100	152 -	1
172-54035	152 -	1
172-54035-800	152 -	1
172-54035-802	152 -	1
172-54035-803	152 -	1
172-54037-800	165 -38	1
172-54038-103	152 -	2
172-54038-3	152 -	2
172-54038-800	152 -14	2
172-54038-801	152 -	2
172-54039-100	184 - 1	1
172-54039-101	184 -	1
172-54039-102	184 -	1
172-54039-103	184 -	1
172-54039-104	184 -	1
172-54039-5	184 - 5	1
172-54039-7	184 - 2	1
172-54039-800	184 -	1
172-54039-801	184 -	1
172-54039-802	184 -	1
172-54039-803	184 -	1
172-54039-804	184 -	1
172-54039-9	184 -	1
172-54040-800	158 - 2	REF
172-54040-800	184 -	1
172-54040-801	184 -	1
172-54040-802	184 -	1
172-54040-803	184 -	1
172-54040-804	184 -	1
172-54042	158 -17	1
172-54043	74 -35	
	74 -	3
172-54044	179 -13	1
172-54045	160 -	1
172-54045-800	160 -	1
172-54046	160 -23	1
172-54046-800	160 -	1
172-54048	160 -12	1
172-54048-10	160 -	1
172-54049-800	160 -22	1
172-54056	273 -34	REF
172-54056	182 -29	1
172-54057	182 -27	1
172-54058-7	157 -	REF
172-54058-7	182 -	1

PART NUMBER	FIGURE AND INDEX NUMBER	QUANTITY
172-54059	182 -	1
172-54060	182 -	1
172-54061	182 - 5	1
172-54062	182 - 1	1
172-54062-30	182 -	1
172-54063	182 - 2	1
172-54063-30	182 -	1
172-54064	182 - 3	1
172-54064-30	182 -	1
172-54065	157 - 2	REF
172-54065	182 -	1
172-54065-30	182 -	1
172-54065-800	182 -	1
172-54066	167 - 9	
	168 -53	
	169 -	
	169 -	6
172-54069-103	153 -	1
172-54069-203	153 -	1
172-54069-800	153 -33	1
172-54069-801	153 -	1
172-54071-10	157 -13	1
172-54071-5	157 -	1
172-54072	170 - 5	1
172-54073-800	172 -	1
172-54075	38A-21	1
172-54076	170 -	2
172-54077	170 -23	2
172-54079-800	165 -37	1
172-54082	157 -17	1
172-54083	157 -20	1
172-54083-3	157 -	1
172-54084	3 -13	1
172-54086-1	157 -	1
172-54086-2	158 -	1
172-54086-3	157 - 4	
	158 -	2
172-54086-5	157 - 5	
	158 -	2
172-54086-7	157 - 6	
	158 -40	2
172-54088-1	157 -	1
172-54088-2	158 -	1
172-54090	158 -47	1
172-54091	157 - 9	1
172-54093	162 -28	1
172-54094	162 -	1
172-54095-10	158 - 1	REF
172-54095-10	180 -	1
172-54095-800	180 -	1
172-54096	180 -	1
172-54096-3	180 - 4	1
172-54096-5	180 - 5	1
172-54097	180 - 3	1
172-54097-100	180 -	1
172-54098	180 - 2	1
172-54098-100	180 -	1
172-54099	180 - 1	1
172-54099-800	180 -	1
172-54101	178 - 1	1
172-54102	178 -	1
172-54102-800	177 - 1	REF
172-54102-800	178 -	1
172-54102-802	178 -	1
172-54103	178 -	1
172-54103-800	178 - 2	1
172-54104-801	155 - 1	REF
172-54104-801	177 -	1
172-54104-803	177 -	1
172-54104-804	177 -	1
172-54104-806	177 -	1
172-54105-15	177 - 8	1
172-54105-51	177 - 2	1
172-54105-800	177 -	1
172-54106	177 -10	1
172-54106-3	177 -	1
172-54106-5	177 -	1
172-54108	50 -31	REF
172-54108	153 -44	1
172-54108-3	153 -	1
172-54109	47 -	1
172-54109-3	47 -62	1
172-54113-1	37 -	1
172-54113-2	37 -14	1
172-54116	37 -15	1
172-54119	158 -48	1
172-54122-10	152 -23	1
172-54125	153 -	
	153 -	3
172-54125-3	153 -	
	153 -	3
172-54127-103	176 -	1
172-54127-105	176 -	1
172-54127-107	176 -	1
172-54127-109	176 -	4
172-54127-800	176 -27	1
172-54128	176 - 1	1
172-54128-800	176 -	1
172-54128-802	176 -	1
172-54129-800	153 - 1	REF
172-54129-800	176 -	1
172-54129-802	176 -	1
172-54129-804	176 -	1
172-54129-806	176 -	1
172-54129-950	176 -28	1
172-54145	168 -24	2
172-54145-800	169 -24	2
172-54151-11	32 -40	REF
172-54151-11	62 -78	1
172-54152	62 -	1
172-54154	62 -	1
172-54156	41 -	2
172-54157	178 -	
	178 -	2
172-54161	162 -15	1
172-54161-30	162 -16	1
172-54162	162 -	
	162 -	2
172-54165	153 -36	1
172-54165-103	153 -	1
172-54165-203	153 -	1
172-54165-3	153 -	1
172-54165-800	153 -	1
172-54165-801	153 -	1
172-54166-20	153 -	1
172-54166-800	153 -	1
172-54166-801	153 -	1
172-54240-3	163 -	1
172-54240-5	163 -26	1
172-54241	163 -	1
172-54242	163 -	1
172-54244	162 -30	1
172-54245	162 -	1
172-54259	158 -14	1
172-54259-3	158 -	1
172-54408	263 -	2

PART NUMBER	FIGURE AND INDEX NUMBER	QUANTITY
172-54711	125 -31	1
172-58038-3	224 -	1
172-58058	36 -	REF
	189 -	
172-58058	188 -	NP
172-58058-950	188 -20	1
172-58059	36 -	REF
	191 -	
	192 -	
	217 -	
	218 -	
172-58059	190 -	NP
172-58066-800	2 -	REF
172-58066-800	200 -	NP
172-58066-801	200 -	NP
172-58066-951	200 -23	1
172-58066-957	200 -24	1
172-58101	200 -66	REF
172-58101	3 -12	1
172-58102	200 -65	REF
172-58102	3 - 8	1
172-58103	191 -58	REF
172-58103	40 -14	1
172-58104	191 -57	REF
172-58104	40 -13	1
172-58105	191 -	1
172-58107	191 -17	1
172-58107-800	191 -	1
172-58108	191 -16	1
172-58110	200 -64	REF
172-58110	3 -19	1
172-58111	77 -33	1
172-58112-5	193 -42	1
172-58112-7	193 -43	1
172-58112-800	193 -	1
172-58112-801	193 -	1
172-58112-9	193 -41	1
172-58122-1	79 -18	1
172-58122-2	79 -	1
172-58122-801	79 -	1
172-58122-802	79 -	1
172-58123-1	79 -19	1
172-58123-2	79 -	1
172-58123-801	79 -	1
172-58123-802	79 -	1
172-58124	42 -16	1
172-58125	42 -17	1
172-58128	79 -30	1
172-58129	79 -31	1
172-58134	236 -	1
172-58134-3	236 - 8	1
172-58134-5	236 - 9	2
172-58134-7	236 -10	1
172-58136	308 - 1	1
172-58137	224 - 1	1
172-58138	308 -12	1
172-58139	308 - 9	1
172-58141	308 -	1
172-58142	77 -	2
172-58142-3	77 -34	2
172-58142-5	77 -	2
172-58144	74 -34	1
172-58145	63 -	1
172-58146	224 -26	1
172-58182-1	238 - 2	1
172-58182-2	238 -	1
172-58183	207 -16	2
172-58184	79 -17	1

PART NUMBER	FIGURE AND INDEX NUMBER	QUANTITY
172-58185	77 - 3	1
172-58189	240 -33	1
172-58190	193 -57	1
172-58198	77 -	1
172-58199	77 -	1
172-58204	211 -19	1
172-58204-3	211 -	1
172-58204-5	211 -	1
172-58205	211 -	1
172-58208	3 - 7	1
172-58263-3	8 - 7	1
172-58263-4	8 -	1
172-58282	79 -22	1
172-58283	79 -21	1
172-58302-1	77 -38	1
172-58302-2	77 -	1
172-58601-805	209 - 1	REF
172-58601-805	236 -	1
172-58601-807	236 -	1
172-58603-5	200 -	1
172-58603-805	200 -	1
172-58605-10	100 -76	REF
172-58605-10	191 -	1
172-58605-810	191 -	1
172-58610	208 - 1	REF
	210 - 2	
172-58610	237 -	2
172-58615-950	200 -	1
172-58615-951	200 -	1
172-58624-803	210 -20	1
172-58624-804	211 -14	1
172-58624-805	211 -12	1
172-58624-809	210 -18	1
172-58624-815	210 -	1
172-58624-816	211 -	1
172-58624-817	210 -	1
172-58624-818	211 -	1
172-58626-3	211 -18	1
172-58627-15	211 - 1	REF
172-58627-15	239 -	1
172-58628-3	211 -	1
172-58629-3	210 - 1	REF
172-58629-3	240 -	1
172-58630	210 - 3	REF
172-58630	230 -	1
172-58631	307 -	REF
172-58631	308 -	1
172-58631-801	308 -	1
172-58631-803	308 -	1
172-58631-805	308 -	1
172-58634-5	8 -24	REF
172-58634-5	203 -	1
172-58634-805	203 -	1
172-58635-5	205 -	1
172-58635-805	205 -	1
172-58637	210 -12	1
172-58639-3	193 -	1
172-58640-5	191 - 2	REF
172-58640-5	213 -	1
172-58642-3	188 -	1
172-58643-3	211 -15	1
172-58643-807	188 -	1
172-58646	195 -	1
172-58647	194 -	1
172-58650-10	190 - 2	REF
	191 - 1	
172-58650-10	220 -	2
172-58655-3	193 -	1

PART NUMBER	FIGURE AND INDEX NUMBER	QUANTITY
172-58707-3	26 -36	REF
	241 - 2	
172-58707-3	243 -	1
172-58707-803	243 -	1
172-58727	243 -17	1
172-58729	241 -15	2
172-58732	243 -26	2
172-58733	132 -61	REF
172-58733	243 -19	1
172-58734	243 -36	1
172-58735	243 -37	1
172-58736	243 -	1
172-58739	243 -32	2
172-58740	241 -16	1
172-58751	242 -	
172-58751-5	242 -23	1
172-58751-805	242 -	1
172-58754-5	242 -26	1
172-58801-1025	200 -	1
172-58801-1027	200 -	1
172-58801-25	200 -43	1
172-58801-27	202 -27	REF
172-58801-27	200 -44	1
172-58801-3	200 -54	1
172-58801-65	201 -25	1
172-58801-9	204 -28	REF
172-58801-9	200 -52	1
172-58802-1011	205 -	1
172-58802-1017	205 -	1
172-58802-1025	203 -	1
172-58802-11	205 -25	1
172-58802-17	205 -26	1
172-58802-1954	203 -	1
172-58802-1956	203 -	1
172-58802-25	203 -19	1
172-58802-954	203 -20	1
172-58802-955	233 -14	REF
172-58802-955	201 -20	1
172-58802-956	206 -13	REF
172-58802-956	203 -22	1
172-58802-957	201 -	1
172-58805-3	188 -64	1
172-58805-5	191 -54	REF
172-58805-5	188 -61	1
172-58805-9	191 -52	REF
172-58805-9	188 -56	1
172-58807-1061	192 -	1
172-58807-15	191 - 5	1
172-58807-21	213 -21	REF
172-58807-21	191 -34	1
172-58807-23	191 -38	1
172-58807-29	191 - 6	1
172-58807-3	191 -36	1
172-58807-31	191 - 7	1
172-58807-33	191 - 9	1
172-58807-39	191 -39	1
172-58807-61	192 - 6	1
172-58807-63	190 -15	1
172-58807-65	213 -15	1
172-58807-75	190 -30	1
172-58807-77	190 -29	1
172-58807-79	191 -41	1
172-58810-15	221 -54	REF
172-58810-15	193 -53	1
172-58810-17	194 -11	1
172-58810-25	194 -20	1
172-58810-29	194 -15	1
172-58810-31	194 -17	1

PART NUMBER	FIGURE AND INDEX NUMBER	QUANTITY
172-58810-33	194 -18	1
172-58810-63	197 -38	1
172-58810-800	193 -40	1
172-58813-17	196 -32	1
172-58813-41	196 -12	1
172-58813-63	197 -40	1
172-58813-65	197 -48	1
172-58813-67	197 -55	1
172-58813-69	197 -60	1
172-58813-77	197 -64	1
172-58814-23	194 -31	REF
172-58814-23	196 - 7	1
172-58814-27	196 -17	1
172-58815-41	198 -13	1
172-58817-75	194 -30	REF
172-58817-75	195 -58	1
172-58818-1011	193 -	1
172-58818-11	193 -12	1
172-58818-13	193 -10	1
172-58818-25	193 - 4	1
172-58818-27	193 - 7	1
172-58818-29	193 -49	1
172-58818-41	194 -23	1
172-58818-43	196 -49	REF
172-58818-43	194 -26	1
172-58818-47	193 -51	1
172-58818-55	219 -33	REF
172-58818-55	190 -26	1
172-58818-59	189 - 8	1
172-58821-11	210 -19	1
172-58821-15	210 -11	1
172-58821-19	211 - 4	1
172-58821-23	211 -13	1
172-58821-29	210 - 5	1
172-58821-35	210 -21	1
172-58821-37	210 -23	1
172-58821-39	210 -53	1
172-58821-49	239 -13	REF
172-58821-49	211 -26	1
172-58821-51	211 -23	1
172-58821-55	210 -27	1
172-58821-57	240 -35	REF
172-58821-57	210 -39	1
172-58821-59	230 -18	REF
172-58821-59	210 -35	1
172-58821-61	210 -51	1
172-58821-65	208 -22	1
172-58821-69	208 -14	1
172-58821-71	237 -24	REF
172-58821-71	208 -26	1
172-58822-25	209 -34	REF
	240 -34	
172-58822-25	210 -43	1
172-58822-29	210 -37	1
172-58822-31	237 -23	REF
172-58822-31	208 -25	1
172-58822-49	211 -25	1
172-58822-53	238 -	1
172-58822-65	211 - 8	1
172-58822-69	211 -10	1
172-58822-951	209 -35	REF
172-58822-951	210 -15	1
172-58823-19	209 -36	REF
	240 -36	
172-58823-19	210 -41	1
172-58823-21	210 -13	1
172-58823-27	210 -28	1
172-58823-31	239 -15	REF

PART NUMBER	FIGURE AND INDEX NUMBER	QUANTITY
172-58823-31	211 -17	1
172-58823-33	239 -14	REF
172-58823-33	211 -16	1
172-58823-37	210 -30	1
172-58823-39	238 -	1
172-58823-45	238 -	1
172-61658	67 -11	1
172-61659	67 -13	1
172-61661	67 -15	1
172-61662	67 -14	1
172-61666	294 - 6	1
172-61667-10	294 - 7	2
172-61668	294 -10	1
172-61670	67 -22	
	67 -58	2
172-61671-1	67 -20	1
172-61671-2	67 -	1
172-63223	311 -13	2
172-63225	311 -10	2
172-63226	311 -14	2
172-63227	311 -15	2
172-63228	311 -11	2
172-63230-10	311 - 7	2
172-63230-3	311 - 8	2
172-63230-4	311 -	2
172-63230-5	311 -	2
172-68005	309 -	8
172-68006	309 -11	8
172-68007	309 -12	8
172-68009	309 - 5	8
172-68010	309 - 4	8
172-68702	261 -12	1
172-68703	261 -23	1
172-68704	261 -17	4
172-68705-10	261 -	1
172-68707	262 - 8	8
172-68739	261 -	1
172-68739-3	261 -52	1
172-69001	1 -12	REF
172-69001	294 -	NP
172-69002	294 -	1
172-69002-3	294 - 4	2
172-69002-5	294 - 5	1
172-69003	294 -14	REF
172-69003	67 -	1
172-69004	67 -10	1
172-69005-1	67 -	1
172-69005-2	67 -18	1
172-69006	294 -12	2
172-69007	294 -	1
172-71012	289 - 7	1
172-71022	288 -34	1
172-71023	288 -32	1
172-73326	40 - 2	1
172-73326-3	40 -	1
172-73326-5	40 -	1
172-73327	287 -	1
172-73328	287 -26	1
172-73329	287 -27	1
172-73560	67 -24	1
172-73570	41 -	1
172-73570-3	41 -12	1
172-73570-5	41 -13	1
172-73570-7	41 -14	2
172-74021-1	292 -29	1
172-74021-13	292 -	1
172-74025-10	289 -17	1
172-74026	289 -	1

PART NUMBER	FIGURE AND INDEX NUMBER	QUANTITY
172-74031	36 -	REF
	293 -	
	293A-	
172-74031	292 -	NP
172-74031-950	293A-	2
172-74033	142 -24	1
172-74035	41 -18	1
172-74035-3	41 -	1
172-74036	41 -	1
172-74036-3	41 -19	1
172-74037	293 -12	2
172-74039	293 -41	1
172-74040	293 -39	1
172-74041	293 -	1
172-74042	293 -	1
172-74042-3	293 -	1
172-74042-5	293 -	2
172-74045	293A- 3	1
172-74048	292 -11	1
172-74049	292 -49	1
172-74049-3	292 -	1
172-74051	293A- 6	1
172-74052-10	293A- 8	1
172-74057	293A- 7	1
173-18053-3	23 -	
	23 -	2
173-18053-4	23 -	
	23 -	2
173-18053-5	23 -	3
173-18053-6	23 -	3
173-18054-3	23 -	12
173-18055-3	23 -	
	23 -	6
173-18055-4	23 -	
	23 -	6
173-71029	71 -	1
175-48314	263 -	2
175-48316	263 -	4
175-48317	263 -	4
175-48318	263 -	2
175-48320	267 -36	REF
	268 - 1	
175-48320	263 -	2
175-48320-3	263 -	2
175-48322	263 -	2
175-48324	263 -	2
176-14716	8 - 9	2
176-14716-801	8 -	2
176-14721-1	10 -34	1
176-14721-2	10 -	1
176-14726-801	9 - 2	1
176-14726-802	9 -	1
176-14743-1	9 - 6	1
176-14743-2	9 -	1
176-14767	9 - 5	2
176-14813	9 -	2
176-31147-1	39 - 5	REF
176-31147-1	39A-	1
176-31147-2	39 -	REF
176-31147-2	39A-	1
176-31147-3	39A- 1	1
176-31147-4	39A- 2	1
176-31147-800	39A-	1
176-31147-950	39A-	1
176-31149	39A- 9	1
176-31801	36 -	REF
	70 -	
	274 -	

PART NUMBER	FIGURE AND INDEX NUMBER	QUANTITY
176-31801	69 -	NP
176-31809	69 -31	1
176-31818	70 -	1
176-31818-3	70 -	1
176-31826	38 -59	2
176-31827	71 -50	1
176-31830	38 -	1
176-31831	38 -	2
176-31832	38 -37	1
176-31835	70 -	1
176-31836	70 -	1
176-31837	38 -51	1
176-31856	68 -	1
176-31860	38 -46	1
176-31864-3	38 -52	1
176-31864-5	38 -	1
176-31869-800	302 -	1
176-31870-21	38 -38	1
176-31870-22	38 -	1
176-31871-10	38 -44	1
176-31871-5	38 -	1
176-31872-1	38 -53	1
176-31872-2	38 -	1
176-31873	38 -48	1
176-31874	38 -39	1
176-31875	38 -43	1
176-31876	69 -52	REF
176-31876	38 -41	1
176-31876-801	38 -	1
176-31876-803	38 -	1
176-31877	69 -51	REF
176-31877	38 -28	1
176-31879	38 -40	1
176-31880-20	38 -	1
176-31881	38 -63	1
176-31881-3	38 -	1
176-31882	38 -62	1
176-31882-3	38 -	1
176-31883	38 -56	2
176-31884	38 -54	2
176-31885	38 -47	1
176-31886	38 -45	1
176-31887	38 -	1
176-31888-1	38 -	1
176-31888-2	38 -	1
176-31889	38 -31	1
176-31890	38 -32	1
176-31891	38 -35	1
176-31892	69 -	1
176-31892-3	69 -45	1
176-31893-10	38 -42	1
176-31894	69 -50	REF
176-31894	38 -24	1
176-31895	38 -50	1
176-31895-3	38 -	1
176-31895-5	38 -	1
176-31895-7	38 -	1
176-31897	38 -	1
176-31897-3	38 -36	1
176-31898	69 -38	1
176-33545-1	66 -	1
176-33545-2	66 -	1
176-33545-5	66 -	2
176-33642	47 -63	1
176-33650	47 -64	1
176-33801-801	93 -	REF
176-33801-801	94 -	NP
176-33801-802	93 -	REF
176-33801-802	94 -	NP
176-33831-1	94 -	1
176-33831-11	94 -	1
176-33831-12	94 -	1
176-33831-2	94 -	1
176-33832-1	94 - 1	1
176-33832-2	94 -	1
176-33833	94 - 6	2
176-33833-10	94 -	2
176-33834	94 - 8	2
176-33835-1	94 -10	1
176-33835-2	94 -	1
176-34669	82 -57	1
176-34801-800	82 -	NP
176-34801-810	154 -	NP
176-34830	82 -	1
176-34831	82 - 8	1
176-34832	82 - 6	1
176-34833	82 - 3	1
176-34834	82 -11	1
176-34835-3	82 -13	1
176-34850	154 -	1
176-34851	154 -35	1
176-34852	154 -32	1
176-34853-800	154 -40	1
176-34854-800	154 -	1
176-34855	154 -41	1
176-34855-3	154 -	1
176-46002	73 - 8	1
176-46003	75 -27	REF
176-46003	73 -	1
176-47002	269 - 1	REF
176-47002	270 -	1
176-47002-902	270 -	1
176-47005	269 - 2	1
176-47006	269 - 4	1
176-47011-5	63 -	1
176-48101	254 -17	1
176-48201-101	1 -	REF
176-48201-101	267 -	1
176-48201-102	1 -	REF
176-48201-102	267 -	1
176-48221	258 -	
	259 -47	4
176-48250-51	267 - 1	REF
176-48250-51	268 -	1
176-48250-52	267 -	REF
176-48250-52	268 -	1
176-48251	268 -	2
176-48252	268 -	2
176-48253-31	268 -	2
176-48254	268 -65	4
176-48256	268 -33	2
176-48257	268 -	2
176-48259-3	268 -	2
176-48259-5	268 - 8	2
176-48260	268 -68	8
176-48261	268 -	2
176-48262	268 -18	2
176-48263-3	268 -25	2
176-48263-5	268 -24	2
176-48266	268 -11	2
176-48267	268 -28	2
176-48269	268 -	
	268 -	4
176-48271	268 -17	2
176-48272	268 -34	2
176-48273-1	268 - 6	1

PART NUMBER	FIGURE AND INDEX NUMBER	QUANTITY
176-48273-2	268 -	1
176-48274-3	268 -20	2
176-48275	268 -	2
176-48276	268 -	2
176-48277-31	268 -36	2
176-48278-31	268 -	1
176-48278-32	268 -	1
176-48280-11	268 -	2
176-48280-13	268 -	2
176-48280-21	267 -37	REF
176-48280-21	268 -	1
176-48280-22	268 -	1
176-48280-951	268 -	2
176-48280-953	268 -49	2
176-48281-1	268 -40	1
176-48281-2	268 -	1
176-48282-1	268 -41	1
176-48282-2	268 -	1
176-48283	268 -38	2
176-48284-3	268 -44	2
176-48287	268 -	2
176-48287-3	268 -53	2
176-48288-3	268 -	8
176-48288-5	268 -	8
176-48290-3	268 -43	2
176-48290-5	268 -	2
176-48290-7	268 -42	2
176-48290-9	268 -	2
176-48293-1	268 -	2
176-48293-2	268 -	2
176-48294	268 -12	4
176-48295-1	268 -13	2
176-48295-2	268 -	2
176-48296-1	268 -14	2
176-48296-2	268 -	2
176-48299	264 -16	2
176-48299-851	267 -32	4
176-48302-903	1 - 9	REF
176-48302-903	267 -	NP
176-48302-904	1 -	REF
176-48302-904	267 -	NP
176-48302-910	267 -	
176-48302-911	267 -	
176-48303-3	264 -15	
	267 - 2	2
176-48303-4	264 -	
	267 -	2
176-48306-1	267 -	1
176-48306-2	267 -	1
176-48307-801	268 -45	2
176-48311	263 -13	2
176-48312	267 -	2
176-48312-801	267 -	
176-48313	263 -29	2
176-48322-3	267 -38	REF
176-48322-3	268 -30	1
176-48322-4	268 -	1
176-48322-953	268 -	
176-48322-954	268 -	
176-48323	267 -26	2
176-48325	263 -36	2
176-48326	267 -12	2
176-48327	267 -16	2
176-48329-1	267 -18	1
176-48329-2	267 -	1
176-48330-1	267 -17	1
176-48330-2	267 -	2
176-48331-11	267 -	4

PART NUMBER	FIGURE AND INDEX NUMBER	QUANTITY
176-48331-3	267 -20	1
176-48331-4	267 -	1
176-48331-5	267 -	1
176-48331-51	267 -	1
176-48331-52	267 -	1
176-48331-6	267 -	1
176-48331-7	267 -	4
176-48331-9	267 -	4
176-48378	267 -34	2
176-48379	267 -35	2
176-51013	2 -	REF
176-51013	143 -	NP
176-51107	140 -40	1
176-51108	140 -35	1
176-51112	140 -34	1
176-52001	1 -	REF
176-52001	125 -	NP
176-52031	36 -	REF
	126 -	
	131 -	
	135 -	
176-52031	130 -	NP
176-52031-951	130 -33	AR
176-52032	1 -	REF
	134 -	
	137 -	
	212 -	
176-52032	132 -	NP
176-52203	132 -	1
176-52206-3	133 - 3	1
176-52206-5	133 -	1
176-52208-5	132 - 1	REF
176-52208-5	133 -	1
176-52218	131 -30	1
176-52220-3	134 -	1
176-52220-803	134 -	1
176-52221	131 -24	1
176-52223-5	131 - 5	1
176-52223-9	131 - 3	1
176-522231	131 -14	1
176-52224-3	134 -22	1
176-52224-5	134 -	1
176-52225-5	131 -	1
176-52225-7	131 -	1
176-52230	37 -	2
176-52235	133 - 1	1
176-52238	131 - 2	1
176-52239	131 - 1	1
176-52241	131 -20	1
176-52242	134 -39	REF
176-52242	29 -24	1
176-52242-10	29 -	
	29 -	1
176-52243-9	132 -17	1
176-52244	131 -12	1
176-52245	130 - 9	1
176-52246	51 -	1
176-52258	134 -13	1
176-52259	134 - 8	1
176-52259-800	134 -	1
176-52261	26 -21	1
176-52263-800	134 -19	1
176-52264-800	134 -20	1
176-52265	134 -21	1
176-52322	125 -	1
176-52322-3	125 - 2	1
176-52322-5	125 -	1
176-52425	135 -	NP

PART NUMBER	FIGURE AND INDEX NUMBER	QUANTITY
176-52428	135 - 6	1
176-52431	135 - 9	1
176-53053	121 -14	1
176-53069	121 -	
	288 -	2
176-53071	121 -17	1
176-53071-10	121 -	1
176-53071-3	121 -	1
176-53071-801	121 -	1
176-53071-803	121 -	1
176-53163-10	123 -	1
176-53164	123 -35	1
176-53164-10	123 -	1
176-53164-21	123 -	1
176-53165-1	123 -	1
176-53165-2	123 -	1
176-53320-805	271 -29	1
176-53324	271 -48	REF
176-53324	65 -24	1
176-54085	161 -	1
176-54128-3	162 -18	2
176-54128-5	162 -17	2
176-54297-800	140 -54	1
176-54298	140 -55	1
176-58706-11	242 -	1
176-58706-13	241 - 1	REF
176-58706-13	242 -	1
176-58706-151	26 - 4	REF
	29 -66	
176-58706-151	241 -	1
176-58706-851	241 -	1
176-58706-853	241 -	1
176-58706-913	242 -	1
176-58706-930	241 -	1
176-58706-931	241 -	
176-58726	241 -13	1
176-58730	241 -12	1
176-58730-3	241 -14	1
176-58742	241 - 8	1
176-58743	241 - 6	1
176-58745	242 -	
	242 -	8
176-58765	241 - 7	2
176-58766-13	241 - 4	1
176-58766-15	241 - 5	1
176-61035-1	301 -44	REF
176-61035-1	51 -50	1
176-61035-2	51 -	1
176-66009-801	295 -	1
176-66010-10	295 -15	1
176-66011	295 -17	1
176-66012-801	295 -19	1
176-66013-801	295 -16	1
176-66020	295 -22	1
176-66020-800	295 -25	1
176-68706	261 -20	1
176-68737	261 - 1	1
176-68738	261 -54	REF
176-68738	40 -	1
176-73301	36 -	REF
176-73301	287 -	NP
176-73301-950	287 -55	1
176-73322	287 -54	1
176-73323	287 -47	1
176-73324	287 -	1
176-73324-10	287 -	
	287 -	2
176-73324-3	287 -	

PART NUMBER	FIGURE AND INDEX NUMBER	QUANTITY
176-73324-3	287 -	
	287 -49	5
176-73324-800	287 -50	1
176-73324-950	287 -48	1
176-73326	287 -58	REF
176-73326	39A-	1
176-73326-3	39A-10	1
176-73326-5	39A-11	1
176-73326-7	39A-12	1
176-73326-800	39A-	1
176-73327	287 -59	REF
176-73327	39A-	1
176-73327-3	39A-13	1
176-73327-5	39A-14	1
176-74045	293 -36	1
176-74046	293 -34	1
176-74047	293 -35	
	293 -38	2
176-74048	293 -37	1
176-947005	269 -52	REF
176-947005	270 -	1
177-18001-100	23 -	1
177-18001-101	6 - 3	REF
	201 -	
177-18001-101	23 -	1
177-18001-103	23 -36	1
177-18001-104	23 -	1
177-18001-105	23 -	1
177-18001-106	23 -	1
177-18001-107	23 -71	1
177-18001-108	23 -	1
177-18001-109	23 -	2
177-18001-11	23 -73	1
177-18001-111	23 -	1
177-18001-112	23 -	1
177-18001-117	23 -13	1
177-18001-119	23 - 4	1
177-18001-120	23 - 5	1
177-18001-121	23 -	1
177-18001-122	23 -	1
177-18001-123	23 -	1
177-18001-124	23 -	1
177-18001-125	23 -	1
177-18001-126	23 -	1
177-18001-127	23 -	1
177-18001-128	23 -	1
177-18001-129	23 -	1
177-18001-13	23 - 3	1
177-18001-130	23 -	1
177-18001-133	23 -	2
177-18001-135	23 -62	1
177-18001-136	23 -	1
177-18001-137	23 -18	1
177-18001-138	23 -	1
177-18001-139	23 -	2
177-18001-14	23 -	1
177-18001-141	23 - 7	2
177-18001-143	23 -	2
177-18001-145	23 -	2
177-18001-15	23 -10	1
177-18001-16	23 -	1
177-18001-17	23 -11	2
177-18001-19	23 -69	
	23 -70	2
177-18001-2	6 -	REF
177-18001-2	23 -	1
177-18001-20	23 -	
	23 -	2

PART NUMBER	FIGURE AND INDEX NUMBER	QUANTITY
177-18001-21	23 -	1
177-18001-22	23 -	1
177-18001-25	23 -	2
177-18001-27	23 - 8	1
177-18001-29	23 -	1
177-18001-3	23 -67	1
177-18001-31	23 -	4
177-18001-33	23 -14	1
177-18001-34	23 -15	1
177-18001-35	23 -19	1
177-18001-36	23 -	1
177-18001-37	23 -	4
177-18001-39	23 -	2
177-18001-4	23 -	1
177-18001-41	23 -	1
177-18001-47	23 -52	1
177-18001-48	23 -	1
177-18001-49	23 -61	1
177-18001-5	23 -72	1
177-18001-50	23 -	1
177-18001-51	23 -	2
177-18001-53	23 -64	1
177-18001-54	23 -	1
177-18001-55	23 -17	1
177-18001-56	23 -	1
177-18001-57	23 -	1
177-18001-58	23 -	1
177-18001-59	23 -12	1
177-18001-6	23 -	1
177-18001-60	23 -	1
177-18001-61	23 -	1
177-18001-62	23 -	1
177-18001-63	23 - 9	1
177-18001-64	23 -	1
177-18001-65	23 -	2
177-18001-67	23 -38	1
177-18001-68	23 -	1
177-18001-69	23 -	
	23 -	4
177-18001-71	23 - 6	2
177-18001-73	23 -	1
177-18001-74	23 -	1
177-18001-75	23 -51	1
177-18001-76	23 -	1
177-18001-77	23 -53	1
177-18001-78	23 -	1
177-18001-79	23 -	2
177-18001-8	23 -	1
177-18001-801	23 -	1
177-18001-802	23 -	1
177-18001-803	23 -	1
177-18001-804	23 -	1
177-18001-805	23 -	
177-18001-806	23 -	
177-18001-81	23 -	1
177-18001-82	23 -	1
177-18001-83	23 -63	1
177-18001-84	23 -	1
177-18001-85	23 -	1
177-18001-86	23 -	1
177-18001-87	23 -	2
177-18001-88	23 -	2
177-18001-89	23 -20	1
177-18001-9	23 -65	2
177-18001-90	23 -	1
177-18001-91	23 -	2
177-18001-92	23 -	2
177-18001-93	23 -	1
177-18001-94	23 -	1
177-18001-95	23 -	1
177-18001-96	23 -	1
177-18001-97	23 -	
	23 -	2
177-18001-98	23 -	
	23 -	2
177-18001-99	23 -	1
177-18010-1	23 -	1
177-18010-2	23 -	1
177-18010-3	23 -41	2
177-18010-4	23 -42	2
177-18010-7	23 -	2
177-18011-1	23 -37	1
177-18011-2	23 -	1
177-18011-3	23 -50	1
177-18011-4	23 -	1
177-18012-5	23 -40	1
177-18012-6	23 -	1
177-18012-7	23 -39	1
177-18012-8	23 -	1
177-18048-1	23 -45	2
177-18048-2	23 -46	2
177-18049	23 -44	2
177-18050	23 -43	2
177-18150-2	23 -	1
177-58047-800	213 - 1	REF
	239 - 1	
177-58047-800	225 -	1
180-17068-3	18 -	32
180-17069-3	20 -79	
	20 -84	16
180-17122-3	18 -	32
180-17123	20 -69	
	20 -74	16
181-520184	134 -29	
	173 -	2
181-54217-1	169 -	
	169 -	3
181-54217-3	169 -46	
	169 -57	3
18420-0-45	278 -47	1
18423-0-260	42 -24	1
18423-3-275	67 -27	1
1861	292 -41	
	292 -42	6
187-14520	21 - 7	2
187-17032	18 -	2
187-51054	143 - 2	1
187-51054-3	143 - 1	
	143 -	3
187-54163	168 -32	
	169 -31	4
187-58532	64 -15	1
187-68083	310 -	16
187-74023	177 -17	1
187-74065	293 -	1
187-74065-3	293 -	1
187-74066	293 -	1
190-48274-3	265 -	
190-51047	140 -25	1
191-14230-1	19 -	1
191-14230-2	19 -	1
191-14236	15 -53	
	19 -40	4
191-14242-5	19 -	1
191-14242-6	19 -	1
191-14244-11	19 -44	REF

PART NUMBER	FIGURE AND INDEX NUMBER	QUANTITY
191-14244-11	7 -25	1
191-14244-12	7 -	1
191-14244-3	7 -26	1
191-14244-4	7 -	1
191-14244-5	7 -	1
191-14244-6	7 -	1
191-14249	16 -	2
191-14250	16 -16	2
191-14250-11	16 -	
191-14261-1	19 -39	1
191-14261-2	15 -	
	19 -	2
191-14261-5	19 -36	1
191-14261-6	19 -	1
191-14261-801	15 -48	
	19 -	1
191-14261-802	15 -	
	19 -	1
191-14262-801	15 -50	
	19 -	3
191-14262-802	15 -	1
191-14262-805	19 -	1
191-14339-1	19 -	1
191-14339-2	19 -	1
191-14548-5	19A-28	1
191-14548-6	19A-	1
191-14548-951	19A-29	1
191-14548-952	19A-	1
191-14548-953	21 -16	1
191-14548-954	21 -	1
191-14549-5	19A-31	1
191-14549-6	19A-	1
191-14549-951	19A-32	1
191-14549-952	19A-	1
191-14549-953	21 -17	1
191-14549-954	21 -	1
191-14850-1	16 -10	1
191-14850-2	16 -	1
191-31027-1	51 -	REF
	52 - 1	
191-31027-1	54 -	1
191-31027-2	51 -	REF
	52 -	
191-31027-2	54 -	1
191-31027-801	32 - 6	REF
191-31027-801	54 -	1
191-31027-802	32 -	REF
191-31027-802	54 -	1
191-31630	40 -	1
191-31630-11	40 -	1
191-31630-9	40 -	1
191-31631	40 -40	1
191-31631-11	40 -	1
191-31631-9	40 -41	1
191-31632	40 -	1
191-31633	40 -	1
191-31645-800	313 - 4	
191-31777	63 -	1
191-31858	120 -25	1
191-31859	67 -49	1
191-31860	67 -36	1
191-31870	38 -30	1
191-31880	69 -	1
191-31880-3	69 -13	1
191-31880-5	69 -12	1
191-31881	67 -	1
191-33627	100 -42	1
191-33835-1	94 -11	1

PART NUMBER	FIGURE AND INDEX NUMBER	QUANTITY
191-33835-2	94 -	1
191-34855	154 -	1
191-34856	154 -38	1
191-34857	154 -39	1
191-42013	110 -	4
191-42014	111 - 6	4
191-43011-803	114 -14	1
191-43011-805	114 -15	1
191-43011-811	114 -16	1
191-43011-820	114 -13	1
191-43012-807	114 -	1
191-43012-810	114 -31	1
191-43015	114 -19	1
191-43017	114 -11	1
191-43019-800	113 -28	
	114 -27	2
191-43020-950	114 -35	1
191-43020-951	114 -	1
191-43020-953	114 -	1
191-43021	114 -	1
191-43022	114 -12	1
191-43024	114 -17	1
191-43028	116 -44	1
191-43029	116 -46	1
191-43030	116 -48	1
191-43031	116 -	1
191-43031-3	116 -36	1
191-43032	114 -24	1
191-43033	114 -26	1
191-43036	114 -36	1
191-43037	114 -23	1
191-43038	114 -18	1
191-43039	116 - 3	1
191-43040	116 -	1
191-43040-3	116 -29	1
191-43041	116 -40	1
191-43042	116 -49	1
191-43043	116 -	1
191-43044-812	112 -	REF
191-43044-812	114 -	1
191-43044-950	114 -32	2
191-47009-800	63 -48	1
191-48015	258 -	
	259 -	4
191-48101	248 -29	4
191-48105	248 -31	4
191-48106	246 -	4
191-48109	248 -32	4
191-48112	248 -	4
191-48117	246 -	2
191-48255	268 -	2
191-48255-11	268 -56	4
191-48255-12	268 -	4
191-48255-13	268 -57	4
191-48255-15	268 -58	4
191-48255-29	268 -	2
191-48255-30	268 -	2
191-48255-5	268 -55	4
191-48255-9	268 -66	2
191-48261-955	264 -	1
191-48261-956	264 -	1
191-48270-1	268 -63	2
191-48270-2	268 -	2
191-48274-3	268 -	
191-48279	268 -46	2
191-48284-1	267 -	1
191-48284-11	267 -	2
191-48284-13	267 -	2

PART NUMBER	FIGURE AND INDEX NUMBER	QUANTITY
191-48284-15	267 -	2
191-48284-2	267 -	1
191-48284-3	267 - 4	1
191-48284-4	267 -	1
191-48284-9	267 -	2
191-48318-1	268 -64	2
191-48318-2	268 -	2
191-51045-3	143 - 6	1
191-51045-5	143 - 7	1
191-51045-7	147 -	1
191-51048	140 -	
	140 -	
	140 -	7
191-51112	140 -18	1
191-51113	3 -	1
191-51113-3	143 -26	REF
191-51113-3	3 -26	1
191-51130	9 -38	
	9 -	1
191-52210	134 -	1
191-52253	134 - 2	1
191-52256	134 - 9	1
191-53069	288 -	1
191-53109	68 -21	
	69 -11	
	69 -	3
191-53315	271 -40	1
191-53317	279 -	1
191-53318	272 -46	1
191-53322	67 -25	1
191-53325	41 -	1
191-53326	67 -	2
191-53332	281 -13	1
191-53333	281 -	1
191-53334	281 -18	1
191-53335	281 -19	1
191-53355-55	281 -16	1
191-53417	281 -10	1
191-53451-1	281 -22	1
191-53451-2	281 -	1
191-540-216A	154 -	
191-540-260C	106 -16	1
191-540-271A	106 -15	
	107 -15	2
191-54026	177 -	1
191-54031	36 -	REF
	153 -	
	154 -	
	155 -	
	156 -	
	157 -	
	158 -	
	175 -	
	179 -	
	180 -	
	182 -	
	184 -	
191-54031	152 -	NP
191-54031-953	154 - 4	1
191-54031-954	157 - 7	
	157 -32	2
191-54031-955	154 -	1
191-54033	153 -	1
191-54047	157 -16	1
191-54050	179 -10	3
191-54077	157 -	1
191-54077-100	157 -	1
191-54088	168 -42	

PART NUMBER	FIGURE AND INDEX NUMBER	QUANTITY
191-54088	169 -38	4
191-54126	140 -37	1
191-54158	160 -20	1
191-54194	164 -	2
191-54231	36 -	REF
	160 -	
	161 -	
	162 -	
	163 -	
	164 -	
	165 -	
	186 -	
191-54231	159 -	NP
191-54712	66 -	1
191-58789-1	206 -	1
191-58789-2	206 -	1
191-58801-11	189 -31	1
191-58801-13	188 - 7	1
191-58801-15	188 -14	1
191-58801-17	189 - 3	1
191-58801-19	189 - 1	1
191-58801-21	191 -53	REF
191-58801-21	188 -59	1
191-58801-25	188 -45	1
191-58801-27	188 -51	1
191-58801-3	216 - 8	1
191-58801-33	188 -28	1
191-58801-35	188 - 9	1
191-58801-41	188 -38	1
191-58801-43	188 -22	1
191-58801-49	188 -12	1
191-58801-5	216 -11	1
191-58801-53	189 -23	1
191-58801-55	189 -24	1
191-58801-57	188 -43	1
191-58801-59	188 - 5	1
191-58801-61	188 -30	1
191-58801-7	215 -22	1
191-58801-9	188 -54	1
191-58803-1057	192 -	1
191-58803-13	191 -29	1
191-58803-15	213 -22	REF
191-58803-15	191 -26	1
191-58803-17	213 -23	REF
191-58803-17	191 -23	1
191-58803-19	213 -24	REF
191-58803-19	191 -25	1
191-58803-21	191 -24	1
191-58803-23	191 -32	1
191-58803-25	191 -33	1
191-58803-27	190 -23	1
191-58803-29	192 -16	1
191-58803-3	191 -30	1
191-58803-31	192 -17	1
191-58803-33	192 - 9	1
191-58803-35	192 -14	1
191-58803-37	192 -19	1
191-58803-39	192 -24	1
191-58803-41	192 - 4	1
191-58803-43	192 -26	1
191-58803-45	192 -21	1
191-58803-47	192 -11	1
191-58803-49	191 -49	REF
191-58803-49	190 -25	1
191-58803-5	192 -12	1
191-58803-51	191 -19	1
191-58803-53	191 -12	1
191-58803-55	191 -21	1

PART NUMBER	FIGURE AND INDEX NUMBER	QUANTITY
191-58803-57	192 - 2	1
191-58803-59	192 - 8	1
191-58803-7	192 -22	1
191-58803-9	192 -27	1
191-58805-1023	193 -	1
191-58805-1025	193 -	1
191-58805-11	193 -22	1
191-58805-13	193 -20	1
191-58805-15	193 -36	1
191-58805-17	193 -24	1
191-58805-19	193 -28	1
191-58805-21	193 -32	1
191-58805-23	193 -16	1
191-58805-25	198 -52	REF
191-58805-25	193 -18	1
191-58805-29	193 -48	1
191-58805-3	193 -38	1
191-58805-31	194 -13	1
191-58805-5	193 -26	1
191-58805-7	193 -34	1
191-58805-9	193 -30	1
191-58807-1009	204 -	1
191-58807-1011	203 -	1
191-58807-1013	205 -	1
191-58807-1019	205 -	1
191-58807-1021	205 -	1
191-58807-1023	205 -	1
191-58807-1025	203 -	1
191-58807-1027	205 -	1
191-58807-1029	203 -	1
191-58807-1031	205 -	1
191-58807-1035	203 -	1
191-58807-11	203 - 4	1
191-58807-13	205 -13	1
191-58807-17	205 -18	1
191-58807-19	205 - 4	1000
191-58807-1903	204 -	1
191-58807-1905	202 -	1
191-58807-1907	202 -	1
191-58807-1915	205 -	1
191-58807-1950	203 -	1
191-58807-1954	203 -	1
191-58807-1985	205 -	1
191-58807-21	205 - 6	1
191-58807-23	205 - 8	1
191-58807-25	199 -25	REF
191-58807-25	203 -15	1
191-58807-27	199 -27	REF
191-58807-27	205 -21	1
191-58807-29	199 -24	REF
191-58807-29	203 - 2	1
191-58807-3	204 -13	1
191-58807-31	199 -26	REF
191-58807-31	205 - 2	1
191-58807-35	203 - 6	1
191-58807-39	201 -28	1
191-58807-41	201 -	1
191-58807-5	202 -12	1
191-58807-59	201 -23	1
191-58807-63	201 -13	1
191-58807-65	201 -	1
191-58807-7	206 -15	REF
191-58807-7	202 -11	1
191-58807-71	232 -25	1
191-58807-73	232 -	1
191-58807-75	232 -26	1
191-58807-77	232 -	1
191-58807-79	234 -16	1

PART NUMBER	FIGURE AND INDEX NUMBER	QUANTITY
191-58807-81	234 -17	1
191-58807-9	204 -12	1
191-58807-915	205 -15	1
191-58807-950	203 -11	1
191-58807-952	206 -14	REF
191-58807-952	203 -13	1
191-58807-954	203 -	1
191-58807-956	202 -	1
191-58807-958	202 -	1
191-58807-985	205 -19	1
191-58809-27	228 -19	REF
191-58809-27	196 -26	1
191-58809-29	228 -20	REF
191-58809-29	196 -28	1
191-58809-31	197 -58	1
191-58809-33	197 -66	1
191-58811-11	195 -52	1
191-58811-7	228 -18	REF
191-58811-7	198 -42	1
191-58811-9	201 -54	REF
191-58811-9	195 -56	1
191-58812-31	228 -17	REF
191-58813-1007	200 -	1
191-58813-11	200 -32	1
191-58813-13	200 -30	1
191-58813-15	200 -36	1
191-58813-17	200 -37	1
191-58813-3	200 -14	1
191-58813-5	200 -20	1
191-58813-7	200 -38	1
191-58813-9	200 -22	1
191-61076	298 -13	2
191-61110-1	297 -	1
191-61110-11	297 -45	1
191-61110-12	297 -	1
191-61110-2	297 -	1
191-61110-801	297 -	1
191-61110-802	297 -	1
191-61120-1	301 -35	1
191-61120-2	301 -37	1
191-61121-1	301 -31	1
191-61121-2	301 -33	1
191-61122	301 -40	1
191-61123	301 -43	1
191-63011	121 -41	1
191-74008	293A-12	1
191-74009	293A-13	1
191-74009-3	293A-	1
191-74010	293 - 5	2
191-74027-1	293 -	1
191-74027-2	293 -	1
191-74028-1	293 -	1
191-74028-2	293 -	1
192-66004	295 - 1	1
192-66005	295 - 5	1
192-66006	295 -10	1
192-66007	295 - 6	1
192-66008	295 -	1
192-66008-3	295 - 9	1
192-66011	295 - 8	1
192-66012	295 - 7	1
192-66014	295 -	1
193-48222	19A-	
	258 -55	4
2-2850-76	256 -20	
	282 -22	2
2B1-10-2	153 -	
	158 -	

PART NUMBER	FIGURE AND INDEX NUMBER	QUANTITY
2B1-10-2	176 -	
	176 -15	4
2B1-10-4	153 -	
	176 - 9	2
2B1-7-2	184 -	1
2B1-7-3	183 -	
	184 -	2
2B1-7-4	183 -	
	184 -	5
2B1-7-5	183 -	1
2B1-7-6	184 -	1
2B1B-9-3	175 -18	1
2B1B5-2	177 -	1
2B2-C-4	180 -	1
2B2-C-6	180 -	1
2B2-C-7	180 -	1
2B2B6	182 -	1
2B2C-7	140 -	1
2B2C14	170 -	1
2B2C3	158 -	1
2B2C5	177 -	1
2B2C7	178 -	
	178 -	2
2B2C8	178 -	
	178 -	2
2C1-1-7	32 -	2
2C1-2-7	32 -	2
2C12	3 -11	
	3 -15	
	3 -23	
	15 -	
	37 -	
	41 -	8
2C12-1	3 -18	
	15 -	
	41 -	5
2C12-2	291 -10	1
2C12-3	3 - 6	1
2C12-7	74 -	2
2C15-3	16 -	4
2C16-15	16 -	2
2C16-3	244 -21	2
2C16-4	249 -10	1
2C16-5	74 -	
	86 -	
	173 -46	3
2C16-6	298 -	2
2C17-10H	65 -27	2
2C17-16H	270 -17	1
2C17-4	304 - 6	
	304 - 8	
	304 - 9	4
2C17-9H	150 -15	2
2C20	4 -	2
2C20-1	4 -	2
2C21-2	23 -	28
2C28	5 -	
	5 -	
	7 -	
	7 -18	
	7 -	
	7 -	
	12 -	
	20 -	
	32 -	
	32 -	
	32 -	
	32 -	

PART NUMBER	FIGURE AND INDEX NUMBER	QUANTITY
2C28	40 -	
	53 - 9	
	61 -	
	61 -	
	73 -	
	74 -	
	77 -	
	308 -	64
2C29-12	79 -12	2
2C29-8	3 -21	
	36 -35	3
2C3-2	5 -	
	305 - 3	
	305 -	9
2C31	9 -	
	21 -10	
	53 -	
	76 -	8
2C33	3 -20	
	39 -	
	39 -	
	154 - 6	
	159 -11	
	159 -12	
	159 -14	
	172 -11	
	173 -43	
	175 -27	
	272 -	
	289 -	21
2C33-3	150 -	1
2C38-1	60 -	1
2C38-2	3 -	
2C4	21 - 2	1
2C4-1	21 -	
	21 - 3	2
2C7	37 -49	
	37 -	2
2C7-1	118 -36	1
2C9	42 -44	1
2C9-1	42 -	1
2F4	37 -	
	37 -	
	37 -	3
2F5-2	60 -26	3
2J-1	19 -	2
2J1	14 -70	
	63 -63	9
2L7-2	148 -19	
	155 -	
	156 -	
	158 -	
	158 -	
	160 -	
	160 -	
	161 -	
	162 -	
	162 -	
	163 -	
	164 -	
	165 -	
	165 -	
	168 -	
	168 -	
	169 -	
	172 -	
	175 -	
	177 -	

PART NUMBER	FIGURE AND INDEX NUMBER	QUANTITY
2L7-2	200 -12	
	200 -18	
	210 -	
	210 -	
	211 -	
	211 -	
	288 -	
	288 -	
	289 -	
	293 -	
	293A-	
	293A-	85
2P3-5	307 -30	1
2P7-13-29-31/32	8 -	2
2P7-13-30-43/64	8 -	2
2P7-13-32-11/16	8 -10	8
2P7-13-34-31/32	8 -13	2
2P7-13-35-43/64	8 -12	
	8 -	10
2P7-13-43-3/16	8 -11	8
2P7-9-46-5/8	13 -28	2
2P7-9-54	13 -	2
2R3-10-20	4 -	8
2R3-10-21	4 -	8
2R3-10-22	4 -	8
2R3-10-23	4 -	8
2R3-12-7	3 -	
	3 -	12
2R3-6-4	4 -	
	4 -	16
2R3-6-5	4 -	
	14 -	8
2R3-6-6	4 -	
	14 -	8
2R3-6-7	4 -	4
2R3-6-8	4 -	14
2R3-8-4	4 -	
	4 -	76
2R3-8-5	3 -	
	3 -	
	4 -	
	4 -	142
2R3-8-6	3 -	
	3 -	
	4 -	
	4 -	80
2R3-8-7	3 -	8
2R4-10	4 -	
	9 -	48
2R4-12	3 -	
	3 -	
	9 -	16
2R4-6	4 -	
	4 -	
	14 -	
	316 -	50
2R4-8	3 -	
	3 -	
	4 -	
	4 -	306
2R6-6-3-4	316 - 6	
2R7-10-22	9 -	8
2R7-10-23	9 -	8
2R7-12-24	9 -	4
2S1-3	47 -	1
2S3-3	7 -	2
2WAL-18-24-220	87 -	1
2WAL18-24-64	87 -20	1

PART NUMBER	FIGURE AND INDEX NUMBER	QUANTITY
2WL-13-12-40	211 -	8
2W1-10-14-40	221 -19	2
2W1-10-8-35	151 -	4
2W1-106-80-125	92 - 3	2
2W1-11-10-40	292 -	8
2W1-11-14-65	42 -	
	42 -	6
2W1-11-16-64	121 -	1
2W1-12-12-109	100 -	2
2W1-12-14-031	84 -	3
2W1-12-14-64	150 -	2
2W1-12-16-31	136 -	2
2W1-12-16-64	23 -	
	23 -	8
2W1-12-20-31	85 -	2
2W1-12-20-32	121 -	AR
2W1-12-20-32	112 -	
	121 -	41
2W1-12-20-65	51 -	12
2W1-12-24-32	55 -	
	112 -	4
2W1-12-24-95	90 -40	1
2W1-12-32-32	100 -	2
2W1-13-14-32	281 -	1
2W1-13-16-42	100 -	
	100 -	3
2W1-13-20-32	66 -	
	66 -	
2W1-13-20-50	41 -	2
2W1-13-20-63	65A-	
	66 -	4
2W1-13-20-95	273 -17	1
2W1-13-24-40	71 -	
	71 -	44
2W1-13-26-40	152 -	
	153 -	12
2W1-13-26-42	155 -	
	175 -	
	175 -	
	197 -	29
2W1-13-28-40	158 -	2
2W1-14-14-20	38 -	3
2W1-14-20-32	264 -	8
2W1-16-12-025	91 - 8	2
2W1-16-20-63	70 -	1
2W1-16-20-64	163 -	4
2W1-16-22-63	136 -	2
2W1-16-24-028	87 -	2
2W1-16-24-63	89 -	2
2W1-16-24-64	98 -40	2
2W1-16-32-020	112 -39	
	112 -	3
2W1-16-32-63	118 -	1
2W1-16-38-63	135 -	2
2W1-17-18-32	311 -29	8
2W1-17-20-63	85 -	2
2W1-17-27-40	182 -	2
2W1-18-18-32	135 -	
	153 -	3
2W1-18-24-025	87 -	AR
2W1-18-24-031	87 -	AR
2W1-2-14-032	175 -	8
2W1-20-18-16	70 -	AR
2W1-20-20-16	65A-	AR
2W1-20-20-64	70 -	AR
2W1-20-24-64	86 -	1
2W1-21-18-71	23 -	
	23 -	8

PART NUMBER	FIGURE AND INDEX NUMBER	QUANTITY
2W1-21-28-64	20 -65	12
2W1-24-18-42	302 -	4
2W1-24-20-016	87 -29	AR
2W1-24-20-031	87 -28	1
2W1-24-20-16	66 -	AR
2W1-24-24-032	82 -25	1
2W1-24-24-50	89 -	2
2W1-24-28-125	165 -	
	165 -	8
2W1-24-30-40	85 -	1
2W1-24-36-35	90 -	2
2W1-24-36-64	90 -	1
2W1-25-20-10	70 -	4
2W1-25-20-32	70 -	4
2W1-25-20-71	23 -	24
2W1-25-24-064	110 -	
	110 -	
	111 -	5
2W1-28-24-020	87 -	AR
2W1-28-24-064	87 -	1
2W1-32-24-10	88 -	AR
2W1-32-24-20	88 -	AR
2W1-33-24-20	98 -	AR
2W1-33-28-31	96 -25	4
2W1-42-36-20	136 -	AR
2W1-45-32-10	70 -	AR
2W1-45-32-21	70 -	AR
2W1-49-30-005	126 -	AR
	126 -	
2W1-49-30-010	126 -	AR
	126 -	
2W1-49-30-032	126 -20	
	126 -23	2
2W1-50-32-10	70 - 8	
	70 -	2
2W1-50-32-21	70 -	
	70 -	2
2W1-50-38-64	67 -12	1
2W1-65-41-16	247 -	2
2W1-65-46-20	136 -18	AR
2W1-8-10-31	71 -	2
2W1-8-10-63	71 -	2
2W1-8-16-35	53 -	1
2W1-8-16-51	164 -	2
2W1-8-8-31	71 -	2
2W1-8-8-32	71 -	2
2W1-8-8-63	70 -	1
2W1AC85-52-51	279 -	2
2W1AL-11-24-40	39A-	2
2W1AL-12-12-40	173 -	1
2W1AL-12-24-156	229 -	2
2W1AL-13-12-40	124 -	2
2W1AL-20-20-40	38 -	1
2W1ALP16-14-32	286 -	1
2W1ALP21-14-32	286 -	1
2W1ALP41-33-64	232 -12	2
2W1ALP65-46-40	242 -18	2
2W1AL10-16-64	226 -	3
2W1AL11-14-64	140 -	
	244 -	12
2W1AL11-18-40	153 -	2
2W1AL11-24-040	39A-	1
2W1AL12-10-72	289 -	2
2W1AL12-12-16	169 -	2
2W1AL12-16-32	80 -	6
2W1AL12-18-64	225 -	
	292 -	5
2W1AL12-20-32	269 -47	AR

PART NUMBER	FIGURE AND INDEX NUMBER	QUANTITY
2W1AL12-20-32	273 -	1
2W1AL12-20-64	162 -	4
2W1AL12-22-64	154 -	2
2W1AL12-24-64	261 -18	4
2W1AL13-10-32	42 -	3
2W1AL13-14-32	94 -	8
2W1AL13-16-64	16 -	
	19 -	16
2W1AL13-16-72	56 -	1
2W1AL13-18-040	154 -	2
2W1AL13-32-100	18 -20	16
2W1AL13-32-125	18 -	10
2W1AL13-32-32	18 -	6
2W1AL14-14-16	160 -	4
2W1AL14-16-40	244 -	4
2W1AL14-20-40	244 -	4
2W1AL14-20-64	152 -	4
2W1AL14-28-40	118 -	4
2W1AL15-20-16	121 -	77
2W1AL16-14-32	243 -	2
2W1AL16-24-12	67 -	AR
2W1AL16-24-16	67 -	5
2W1AL16-24-32	90 -	1
2W1AL16-26-32	90 -	1
2W1AL16-32	37 -	1
2W1AL17-20-40	38 -	2
2W1AL17-20-64	38 -	2
2W1AL17-24-91	18 -	8
2W1AL17-27-40	182 -31	2
2W1AL17-32-40	279 -	1
2W1AL17-34-64	247 -	4
2W1AL18-16-32	292 -	6
2W1AL18-22-032	125 -	1
2W1AL18-22-063	125 -	1
2W1AL18-24-40	272 -	1
2W1AL18-24-64	87 -18	1
2W1AL22-20-64	38 -	6
2W1AL22-24-32	71 -	4
2W1AL22-36-125	246 -	2
2W1AL24-20-32	35 -18	
	35 -30	2
2W1AL25-24-91	18 -	
	18 -	12
2W1AL28-19-12	274 -	1
2W1AL28-26-64	90 -	AR
2W1AL29-24-20	92 -	AR
2W1AL32-21-72	164 -	
	165 -13	2
2W1AL32-32-16	80 -	AR
	80 -	
2W1AL32-32-32	80 -	AR
2W1AL32-32-32	80 -	4
2W1AL34-21-64	115 -	
	116 -	2
2W1AL34-24-64	295 -18	1
2W1AL40-34-1875	119 - 7	2
2W1AL40-34-188	119 -	2
2W1AL40-34-250	119 - 6	2
2W1AL74-44-093	86 -	AR
2W1AL74-44-20	86 -	AR
2W1AL74-44-91	86 -	AR
2W1AL8-8-16	273 -	2
2W1AL85-52-51	252 -	1
2W1AL9-10-032	152 -	
	161 -	8
2W1AL9-10-32	37 -	4
2W1AL9-12-32	280 -	1
2W1AL9-12-40	279 -	1

PART NUMBER	FIGURE AND INDEX NUMBER	QUANTITY
2W1AL9-18-40	279 -	1
2W1AL9-52-32	280 -	1
2W1AL9-66-32	280 -	4
2W1B10-17-032	171 -10	4
2W1B24-20-62	171 - 4	
	173 -13	
	173 -	5
2W1B32-28-32	218 -24	1
2W1C-64-44-015	293 -	1
2W1C11-14-64	45 -	4
2W1C114-76-10	92 - 2	AR
2W1C12-24-64	132 -	3
2W1C14-12-32	271 -	4
2W1C16-40-032	154 -	3
2W1C24-32-2	85 -	AR
2W1C24-32-5	85 -	AR
2W1C25-20-63	298 -	12
2W1C25-22-63	298 -	6
2W1C25-40-16	70 -	
	70 -	2
2W1C41-38-16	26 -	8
2W1C52-36-16	163 -	2
2W1C56-35-015	288 -	2
2W1C60-37-10	70 -13	AR
2W1C64-44-015	288 -	
	288 -	4
2W1C80-54-015	292 -	2
2W1F12-18-62	158 -	
	180 -	
	180 -	4
2W1F13-18-62	165 -	2
2W1F22-18-63	157 -	1
2W1F24-18-63	155 -	
	157 -	
	179 -	5
2W1F32-22-63	106 -	
	107 -	
	155 -	
	155 -	
	165 -	
	165 -	6
2W1F40-36-63	155 -	2
2W1F48-36-63	155 -	1
2W1F60-43-63	156 -	1
2W1LB20-16-16	131 -	2
2W1LB24-20-16	243 -	AR
2W1LB40-38-10	93 -	AR
2W1L28-24-62	150 -	6
2W1P10-20-125	165 -	
	165 -	12
2W1P14-20-62	163 -	2
2W1P16-24-062	170 -	16
2W1P23-26-62	172 -	1
2W1P24-18-63	172 -	5
2W1P25-28-125	157 -	
	158 -	3
2W1P28-18-31	286 -	1
2W1P8-18-32	161 -	
	166 -	4
2W1R-29-28-250	221 - 6	1
2W1R-36-44-120	293 -	1
2W1R-48-56-125	292 -	1
2W1R12-18-64	161 -	
	298 -	4
2W1R14-15-250	286 -12	1
2W1R16-12-62	211 -	8
2W1R16-16-62	198 -	
	240 -17	4

PART NUMBER	FIGURE AND INDEX NUMBER	QUANTITY
2W1R16-18-91	155 -	1
2W1R16-22-91	155 -	
	156 -	4
2W1R16-24-93	302 -	21
2W1R18-15-250	286 -17	1
2W1R20-30-125	156 -	1
2W1R24-35-120	288 -	1
2W1R24-36-91	155 -	2
2W1R32-36-91	155 -	1
2W1R32-44-120	288 -	1
2W1R36-44-120	288 -	1
2W1R8-18-125	179 -20	3
2W1SR-16-16-62	221 - 8	2
2W1SR-32-28-125	298 -	12
2W1SR14-18-62	157 -	1
2W1SR14-20-62	171 - 5	
	172 -	
	173 -	
	173 -	9
2W1SR16-18-91	155 -	
	157 -	2
2W1SR16-22-91	106 -	
	107 -	
	155 -	
	155 -	
	165 -	5
2W1SR24-36-91	155 -	2
2W1SR28-36-93	155 -	
	163 -	2
2W1SR32-24-40	161 -	
	276 -	5
2W1SR32-36-91	155 -	1
2W1SR40-32-62	289 -	1
2W1SR72-44-40	268 -	2
2W1SR8-18-125	179 -	3
2W1SP9-10-0312	161 -	2
2W1SR9-10-032	152 -	2
2W1SR9-10-32	37 -	2
2W1SR95-56-64	264 -	2
2W1S16-22-91	165 -	1
2W1V-28-26-625	150 -	2
2W1V10-9-32	156 -	
	156 -	
	157 -	10
2W1V12-12-32	39A-	12
2W1V13-12-32	40 -	
	40 -	12
2W1V13-14-62	51 -	
	51 -	12
2W1V16-24-93	302 -	21
2W1V28-24-62	193 -	6
2W1V32-28-64	287 -	
	287 -	2
2W1V36-28-62	193 -	2
2W1V36-33-64	257 -	1
2W1V37-26-62	191 -	1
2W1V40-52-31	246 -	4
2W1V48-32-62	193 -	1
2W1V8-14-32	157 -	2
2W1V8-8-32	53 -	
	53 -	
	288 -	
	288 -	
	288 -	24
2W10-4	24 -	
	26 - 9	
	132 -	20
2W10-5	20 -67	

PART NUMBER	FIGURE AND INDEX NUMBER	QUANTITY
2W10-5	20 -72	
	38 -	
	38 -	23
2W10-6	20 -77	
	20 -82	16
2W11-3	261 -24	1
2W11-5	153 -	2
2W11A12	242 -25	1
2W11A5	220 -	2
2W11A8	232 -18	2
2W12-19	242 -17	2
2W14	252 -	
	252 -61	
	253 - 5	
	253 -	15
2W16	25 -11	AR
2W17-10L	281 -	
	281 -	9
2W17-416	110 -	
	111 -	3
2W17-616	110 -	
	111 -	2
2W17-8	148 -	1
2W18-10	18 -	
	19 -	
	19A-	
	21 -	
	30 -	
	37 -	
	54 -	
	118 -	
	119 -	
	120 -	
	123 -	
	123 -	
	124 -	
	126 -	
	134 -	
	173 -	
	173 -	
	203 -	
	203 -	
	205 -	
	205 -	490
2W18-10L	309 -	AR
2W18-10L	94 -	
	301 -	16
2W18-10M	7 -	
	19A-	
	30 -	
	118 -	
	119 -	
	119 -	
	123 -	
	173 -	53
2W18-4	297 -	4
2W18-4L	38 -	
	134 -	
	168 -	
	169 -	
	169 -	
	173 -	24
2W18-416	18 -26	
	118 -	
	118 -	
	120 -	
	122 -	
	122 -	

PART NUMBER	FIGURE AND INDEX NUMBER	QUANTITY
2W18-416	123 -	46
2W18-416L	118 -	
	129 -	
	182 -	7
2W18-416M	77 -64	2
2W18-516	118 -	6
2W18-516L	246 -	4
2W18-516M	20 -	AR
2W18-516M	118 -16	
	118 -	
	119 -	12
2W18-6	157 -	
	218 -	6
2W18-6L	301 -	
	301 -	4
2W18-616	18 -	40
2W18-616M	18 -25	16
2W18-716M	82 -	AR
2W18-8	168 -	
	203 -	
	205 -	4
2W18-8L	18 -	
	118 -	
	118 -	
	161 -	
	167 -	
	168 -	
	168 -	
	169 -	
	177 -	
	301 -	75
2W18-816	129 -	2
2W18-916	206 -	1
2W2B16-14-062	91 -	2
2W2B21-28-125	26 -	
	26 -	2
2W2B32-28-062	91 -	2
2W2S-32-56-62	99 -13	2
2W2SP17-34-95	18 -23	16
2W2SP20-16-1000	65 -	2
2W2SP21-28-62	127 -	1
2W2SP21-34-95	18 -22	16
2W2SP25-36-95	18 -	32
2W2SP25-40-95	18 -28	32
2W2S20-22-062	26A-	
	26A-	
	26A-	8
2W4-3	248 -41	
	249 -	36
2W8-10	38 -	4
200-SFF	70 - 3	1
200-1-1/8	307 -	2
200KDD	70 -	
20072	265 -	2
201-52301	125 -16	1
201-52301-3	125 -20	1
201120	272 -21	1
20176	188 -57	1
202-14040-3	9 -	1
202-14040-4	9 -	1
202-14040-951	9 -	
202-14040-952	9 -	
202-14040-953	9 -	
	9 -	1
202-14040-954	9 -	
	9 -	1
202-14041-950	9 -	1
202-14043-950	9 -	1

PART NUMBER	FIGURE AND INDEX NUMBER	QUANTITY
202-14826-10	19 -	1
202-14826-11	19 -14	1
202-14826-12	19 -	1
202-14826-13	19 -15	1
202-14826-14	19 -	1
202-14826-15	19 -	1
202-14826-16	19 -	1
202-14826-17	19 -17	1
202-14826-18	19 -	1
202-14826-20	19 -	1
202-14826-21	19 -19	1
202-14826-22	19 -	1
202-14826-23	19A- 1	1
202-14826-24	19A-	1
202-14826-29	19A-	1
202-14826-30	19A-	1
202-14826-31	19A- 8	1
202-14826-32	19A-	1
202-14826-33	19A- 9	1
202-14826-34	19A-	1
202-14826-35	19A-10	1
202-14826-36	19A-	1
202-14826-37	19A-11	1
202-14826-38	19A-	1
202-14826-39	19A-14	1
202-14826-40	19A-	1
202-14826-41	19A-15	1
202-14826-42	19A-	1
202-14826-43	19A-	1
202-14826-44	19A-	1
202-14826-45	19A-16	1
202-14826-46	19A-	1
202-14826-49	19A-18	1
202-14826-5	19 -	1
202-14826-50	19A-	1
202-14826-51	19A-19	1
202-14826-52	19A-	1
202-14826-53	19 - 5	1
202-14826-54	19 -	1
202-14826-6	19 -	1
202-14826-7	19 -10	1
202-14826-75	19A- 5	1
202-14826-76	19A-	1
202-14826-77	19A- 6	1
202-14826-78	19A-	1
202-14826-8	19 -	1
202-14826-9	19 -11	1
202-14826-953	19 - 8	1
202-14826-954	19 -	1
202-14826-955	19A-17	1
202-14826-956	19A-	1
202-14826-957	19A-	1
202-14826-958	19A-	1
202-14829-3	20 -78	
	20 -83	16
202-14829-5	20 -68	
	20 -73	16
202-14829-7	20 -	
	20 -	
202-14829-9	20 -	
	20 -	
202-14830-31	247 -13	1
202-14830-32	247 -	1
202-14830-41	247 -	1
202-14830-42	247 -	1
202-14830-51	247 -	1
202-14830-52	247 -	1
202-14840-10	18 -16	2

PART NUMBER	FIGURE AND INDEX NUMBER	QUANTITY
202-14840-11	18 -15	2
202-14840-12	18 -	2
202-14840-13	18 -	2
202-14840-14	18 -17	2
202-14840-3	18 -	4
202-14840-4	18 -	4
202-14840-5	18 -	4
202-14840-6	18 -	4
202-14840-7	18 -14	2
202-14840-8	18 -	2
202-14840-9	18 -	2
202-17068-3	18 -24	6
202-17068-5	18 -	10
202-17070	20 -86	REF
202-17070	18 - 4	2
202-17071	20 -87	REF
202-17071	18 - 5	2
202-17072	18 - 6	2
202-17073	18 - 7	2
202-17074	18 - 8	2
202-17075	18 - 9	2
202-17077	18 -	1
202-17077-11	18 -	1
202-17077-800	18 -11	1
202-31876-1	124 -	1
202-31876-2	124 -15	1
202-31879-1	124 -	1
202-31879-2	124 -16	1
202-51174	285 -	1
202-51175	285 -	1
202-53001-801	36 -	REF
	121 -	
202-53001-801	120 -	NP
202-53001-805	120 -	NP
202-53001-83	120 -	1
202-53010-1	118 -43	1
202-53010-2	118 -	1
202-53011-1	118 -48	1
202-53011-2	118 -	1
202-53011-952	118 -	
	118 -	
202-53012	118 -41	4
202-53013-1	118 -39	1
202-53013-2	118 -	1
202-53014	120 -	1
202-53014-21	120 -24	1
202-53014-31	120 -22	
	120 -	2
202-53014-801	120 -	
202-53021-101	118 -17	4
202-53040	124 -19	2
202-53062	118 -	1
202-53087-1	124 -	2
202-53087-2	124 - 3	2
202-53095-11	123 -	2
202-53095-3	123 -	2
202-53095-5	123 -	2
202-53095-800	123 -	1
202-53097-801	124 -	1
202-53097-802	124 -10	1
202-53127	118 -47	2
202-53165	123 -35C	1
202-53193	119 -	1
202-53193-7	119 -	1
202-53193-9	119 -	1
202-54040	153 -	1
202-54040-11	153 -	
202-54041	153 -	3

PART NUMBER	FIGURE AND INDEX NUMBER	QUANTITY
202-54043	153 -	1
202-54704-800	173 -34	1
202-54705	173 -29	1
202-54707	173 -31	1
202-54708	173 -32	1
202-54709	134 -34	
	173 -33	2
2022	82 -36	1
203-16008	24 -59	4
2033-070	2 - 9	6
2034-070	2 - 8	52
20386-9	284 - 2	1
203867	299 -	1
205-10	249 -13	2
205AC-1/4	265 -	
	266 -	
	266 -	
	268 -	
	268 -	
	268 -	40
205AC-10	265 -27	
	266 -	
	266 -26	
	268 -	
	268 -	
	270 - 5	
	270 -10	164
205AC-3/8	268 -	2
205AC-5/16	265 -	4
2064B	271 -	
	271 -	2
212-12	141 -	
	141 -	8
21250A	179 -	
21323	166 -27	REF
214-16	108 -50	2
214-16ND	255 - 6	1
219-1016-3	297 - 6	6
219-1020-3	297 -48	REF
219-1020-3	299 -64	6
22A1-40	14 -	4
22A21-2-02	14 -	26
22A21-22-82	7 -	8
22A217-02	14 -	4
22A27-22-048	71 -	2
22A5-02	14 -	2
22FS524	246 -	4
22G1-048-J8-4	4 -	
	4 -	52
22K2-82	122 -	
	122 -	4
22NM40	292 -	2
22NM82	292 - 9	2
22ZM-40	148 -	4
221-48302-950	264 -	
	267 -	
22318	191 -	
227-14219-3	248 -	2
227-14219-5	248 -	2
227-14238-1	19A- 4	
	19A-	2
227-14238-2	19A-	
	19A-	2
227-14239	19A- 7	4
227-14245	7 -27	2
227-14245-3	7 -	2
227-14245-5	7 -	2
227-14380-1	19 -	1

PART NUMBER	FIGURE AND INDEX NUMBER	QUANTITY
227-14380-2	19 -	1
227-14381-1	19 -	1
227-14381-2	19 -	1
227-14382-1	19 -	1
227-14382-2	19 -	1
227-14383-10	19A-	1
227-14383-3	19A-	
	19A-	2
227-14383-4	19A-	
	19A-	2
227-14383-801	19A-	1
227-14383-802	19A-	1
227-14383-9	19A-	1
227-14423-1	19A-	
	19A-	2
227-14423-2	19A-	
	19A-	2
227-14424-1	19A-	
	19A-	2
227-14424-2	19A-	
	19A-	2
227-14434-3	19 -12	1
227-14434-4	19 -	1
227-14434-5	19 -	1
227-14434-6	19 -	1
227-14435-3	19A-12	1
227-14435-4	19A-	1
227-14435-5	19A-	1
227-14435-6	19A-	1
227-14436-1	19A-	
	19A-20	2
227-14436-2	19A-	
	19A-	2
227-14437-1	19 -	1
227-14437-2	19 -	1
227-14438-1	19 -13	1
227-14438-2	19 -	1
227-14439-1	19A-	1
227-14439-2	19A-	1
227-14440-1	19A- 3	1
227-14440-2	19A-	1
227-14441-3	19A-21	1
227-14441-4	19A-	1
227-14441-5	19A-	1
227-14441-6	19A-	1
227-14443-1	19 -	
	19 -	2
227-14443-2	19 -	
	19 -	2
227-14444-1	19A-	
	19A-	2
227-14444-2	19A-	
	19A-	2
227-14445-1	19A-	
	19A-	
	19A-	
	19A-	4
227-14445-2	19A-	
	19A-	
	19A-	
	19A-	4
227-14446-1	19 -	1
227-14446-2	19 -	1
227-14447-1	19A-	
	19A-	
	19A-	
	19A-	4
227-14447-2	19A-	

PART NUMBER	FIGURE AND INDEX NUMBER	QUANTITY
227-14447-2	19A-	
	19A-	
	19A-	4
227-14448-1	19A-	
	19A-13	2
227-14448-2	19A-	
	19A-	2
227-14449-1	19A-	
	19A- 2	2
227-14449-2	19A-	
	19A-	2
227-14451-21	18 -50	2
227-14451-31	18 -52	2
227-14451-41	18 -54	2
227-14451-51	18 -56	2
227-14530-1	18 -31	
	18 -	8
227-14530-2	18 -	
	18 -36	8
227-14531-1	18 -41	
	18 -	8
227-14531-2	18 -	
	18 -46	8
227-14532-1	18 -30	
	18 -	8
227-14532-2	18 -	
	18 -35	8
227-14533-1	18 -40	
	18 -	8
227-14533-2	18 -	
	18 -45	8
227-14534-3	18 -	AR
	18 -	
227-14534-5	18 -	AR
	18 -	
227-14534-7	18 -	AR
	18 -	
227-14534-803	18 -	AR
	18 -	
227-14535-3	18 -	AR
	18 -	
227-14535-5	18 -	AR
	18 -	
227-14535-7	18 -	AR
	18 -	
227-14535-803	18 -	AR
	18 -	
227-14561	19A-37	REF
227-14561	7 -29	26
227-14562	19A-	
	19A-	46
227-14562-803	19A-	2
227-14564-1	19A-	1
227-14564-2	19A-	1
227-14615	21 - 5	2
227-14616	19A-24	2
227-14617	6 -52	REF
227-14617	21 -20	2
227-14811	19A-	16
227-14827	18 -18	16
227-14832-3	19A-22	1
227-14832-4	19A-	1
227-14832-5	19A-	1
227-14832-6	19A-	1
227-16007-3	9 -	1
227-16007-4	9 -	1
227-16007-803	9 -30	1
227-16007-804	9 -	1

PART NUMBER	FIGURE AND INDEX NUMBER	QUANTITY
227-17076	18 -10	2
227-48187	247 -	2
227-48188	247 -	2
227-53009-800	119 -	REF
	120 -	
	123 -	
227-53009-800	118 -	1
227-53009-805	118 -	1
227-53009-951	118 -54	1
227-53010	119 -23	1
227-53024	121 -11	1
227-53025	121 -	1
227-54705-800	134 -	1
22712-1.500	272 -	1
22712-2.000	272 -	1
22712-200	279 -	2
22712-4.000	272 -45	
	272 -	2
23-52453	100 -	
	100 -	2
2319-27	2 - 7	58
232-A	306 -13	
	306 -	2
2320-30	2 -10	58
233-51A	157 -35	
	177 -21	2
23559	288 -	1
23569-3	189 - 5	1
237-EAU	140 -	
	152 -10	
	156 -24	
	162 -	
	162 -	
	173 -23	
	177 -20	
	185 -21	
	289 -18	19
237EAU	158 -24	1
25-58067	308 -11	1
25K003	299 -	
25K003M	299 -	
25S-2	200 -	
25S-2A	200 -	
25200A-15-A1-1A-1	140 -	
25342-4	231 -	
259A-4TT	277 - 2	1
2611	68 -	
	69 -	2
270-8	158 -35	1
2700-LW	140 - 6	8
2700-SW	140 -	8
2700-6	140 - 7	8
27100	188 -	
27300	191 -13	1
27400	194 -	
27635	167 -10	REF
2880-5B-A1	287 -46	1
2880-5B-C1	287 -	
2881-5B-A1	287 -	
2881-5C-A1	287 -	1
2895-5C-B1	287 -	
29100-1	210 -	
	211 -	
29100-2	166 -24	REF
29100-2	200 -10	
	200 -16	2
29492-1	297 -	
29492-2	297 -	

PART NUMBER	FIGURE AND INDEX NUMBER	QUANTITY
295004	165 -	
	289 - 6	
	289 -	
	290 -	
	296 -	
	296 -	16
295005	153 -	
	289 -	
	296 -	
	296 -	6
295006	288 -	
	288 -	
	289 -	
	292 -43	24
295134-10A	157 -47	
	168 -45	
	169 -41	5
295134-10C	157 -53	
	172 -31	2
295134-12A	153 -54	
	168 -39	
	169 -36	
	175 -29	14
295134-14A	168 - 6	
	168 -10	
	168 -29	
	169 - 7	28
295134-14B	170 - 4	2
295134-14C	288 -40	1
295134-16A	158 -	
	170 -20	3
295134-16B	164 -20	1
295134-16C	158 -	1
295134-20A	51 -	
	158 -	
	160 - 7	
	162 -	
	168 -34	
	175 -	
	289 -	11
295134-20B	14 -	
	165 - 4	
	170 - 8	5
295134-24B	14 -	
	157 -48	
	158 -13	
	160 - 8	5
295134-8A	121 -	
	121 -	
	172 - 6	3
295202-10A	172 -	1
295202-12A	175 -28	1
295202-16A	293 -	6
295202-16B	14 -	
	170 -24	4
295202-8A	172 - 7	
	173 -	5
295202-8C	173 -	4
295981	296 -	
29656-6	134 -33	1
299A-4TT	299 -	
3A1064	100 - 8	1
3A665-1/8	273 - 7	1
3F2-4	150 -61	REF
3F2-4	39 -47	2
3H2-10-10	269 -43	1
3H2-10-12	260 -14	
	285 -21	3

PART NUMBER	FIGURE AND INDEX NUMBER	QUANTITY
3H2-10-14	285 -19	1
3H2-10-15	285 -15	1
3H2-14-12	287 -53	1
3H2-16-14	267 -15	4
3H2-16-15	247 -23	
	252 - 3	
	252 -16	
	252 -27	
	252 -30	
	252 -34	
	252 -39	
	252 -41	
	253 -27	14
3H2-16-33	250 -26	1
3H2-16-36	258 -64	
	259 -55	4
3H2-16-41	265 -62	2
3H2-16-70	250 -21	1
3H2-20-13	258 -51	
	259 -41	4
3H2-20-15	252 -20	
	257 - 6	
	258 -28	
	259 -21	
	259 -34	18
3H2-24-15	252 -23	
	253 - 9	
	253 -13	3
3H2-6-13	259 -10	
	260 - 3	6
3H2-6-15	258 -16	
	269 -42	3
3H2-8-13	267 -10	4
3H2-8-43	265 -60	2
3H2L-4-10	277 -11	1
3H2L10-11	279 -21	1
3H2L4-15	252 -49	
	254 -22	3
3H3-4-0120	235 -15	REF
3H3-4-0120	188 -	
	188 -	
	195 -49	
	197 -51	4
3H3-4-0124	212 -19	
	212 -	4
3H3-4-0130	212 -34	2
3H3-4-0140	220 -10	REF
	235 -14	
3H3-4-0140	190 -21	
	195 -48	
	197 -43	3
3H3-4-0150	220 -11	REF
3H3-4-0150	190 -11	
	191 -44	2
3H3-4-0170	206 -	2
3H3-4-0174	82 -63	REF
3H3-4-0174	189 -33	1
3H3-4-0200	82 -64	REF
3H3-4-0200	189 -34	1
3H3-4-0234	191 -43	1
3H3-4-0280	220 - 9	REF
3H3-4-0280	190 -12	
	191 -42	2
3H3-6-0157	199 -22	REF
3H3-6-0157	209 -27	1
3H3-6-0160	40 -	2
3H3-6-0170	206 -	
	206 -	4

PART NUMBER	FIGURE AND INDEX NUMBER	QUANTITY
3H3-6-0234	206 -	2
3H3-6-0283	198 -49	REF
3H3-6-0283	208 -34	1
3H3-6-0284	206 -	2
3H3C-8-14-5/8	209 -	1
3NBF512YJ	18 -32	
	18 -37	
	18 -42	
	18 -47	
	38 -58	34
3S10-7	261 - 9	1
3S9	153 -22	1
3T3-5-1	153 -	
3T3-5-2	157 -41	
	172 -22	2
3T3-5-3	153 -	
30-D	321 - 8	
30-51049	140 -	
30-71016-2	285 -	1
3000-26	210 -	
	211 -	
30011	289 -	
30058-14	160 -24	1
30058-24	160 -25	1
30058-29	160 -	1
30058-30	160 -	1
31100-3	210 -	
	210 -	
	211 -	
	211 -	
311706	220 - 1	2
311826-1	227 -17	1
312022-1	229 - 4	1
312022-2	229 -	1
31296	174 - 1	1
316-5-6	34 -	1
31770	174 -	2
31873A	158 -	1
31878	187 -	42
31882	174 -	1
31889	187 -	6
32-1451-080	2 -11	50
32-1452-048	87 -21	1
32-1452-126	2 -19	2
32-1453-070	2 -	
32-1454-070	2 -	
32R500-3	153 -56	REF
32R500-3	299 - 2	1
321-625-2250-S	232 -	2
321-63-225-SH	232 -	2
32222	257 -47	REF
32222	121 -34	1
32439A	162 -10	1
32471	162 -14	1
325-.625-6.000-S	210 -36	2
325-625-.375-S	198 -	1
325-625-3.125	198 - 7	2
325-625-3.813-S	198 -29	1
325-625-375-S	210 -40	2
325-625-380-S	191 -	1
325-625-450-S	211 -	2
325-625-463-S	191 -	1
325-625-5 594-S	196 -25	2
325-625-600-S	208 -	2
325-63-313-SH	198 -	2
325-63-375-SH	198 -	
	210 -	3
325-63-380-SH	191 -	1

PART NUMBER	FIGURE AND INDEX NUMBER	QUANTITY
325-63-381-SH	198 -	1
325-63-450-SH	211 -	2
325-63-463-SH	191 -	1
325-63-600-SH	208 -	
	210 -	4
3250-1	307 -	18
32591	185 -20	1
32660	156 -16	1
32889	187 -	30
33500-05	271 -35	
	280 - 2	2
336	168 -17	
	169 -16	4
34A15-2	83 -25	1
34094	292 -	1
34656	134 -	1
350056	162 -	
3502-05-01	295 -	
3509	153 -20	1
3530-05-02	295 -	1
35481	289 -	1
35534-2	164 -34	
	164 -57	
	172 -19	18
35611	187 -	6
35619	170 -36	16
35886	163 -	1
36G2873	121 -39	1
36010-2	172 -	
36837	189 -27	1
37300	191 -	1
37808	195 -63	1
38390	208 -19	
	210 -50	
	308 -19	3
397-1	153 -	
	157 -	
	157 -	
	158 -	
	165 -73	
	170 -	
	170 -	
	173 -	
	175 -	15
397-10	155 -	
	157 -	
	158 -	
	164 -	
	168 -	
	288 -	11
397-11	165 -65	
	165 -	3
397-12	157 -	
	164 - 3	
	168 -	
	168 -	
	169 -	
	173 -	9
397-13	288 -	1
397-2	296 -	AR
397-2	158 -	
	166 -	
	167 -	
	167 -	
	168 -	
	168 -	
	169 -	
	170 -	

PART NUMBER	FIGURE AND INDEX NUMBER	QUANTITY
397-2	172 -	30
397-3	158 -	
	175 -	3
397-4	157 -	
	288 -	2
397-6	165 -	
	173 -	2
397-7	157 -	
	157 -	
	166 -	
	168 -	
	169 -	12
397-9	158 -	
	162 -	
	172 -	
	288 -	5
398-2	170 -	2
398-3	170 -	2
4-2050-77	227 -16	
	229 -14	2
4AT4	140 -19	1
4B16-CF4-4	79 -39	2
4B16-CF4-6	79 -40	2
4B16-CP4-6	170 -	4
4B16-CP5-4	139 -	
	139 -	2
4B16-RF10-27	238 -16	4
4B16-RF7-19	139 -	1
4B16-RF7-8	139 -	2
4B16BF4-12	71 -	8
4B16CF10-28	136 -23	4
4B16CF10-29	136 -17	2
4B16CF4-12	134 -24	2
4B16CF4-18	262 -15	16
4B16CF4-4	97 -	4
4B16CF4-9	96 -15	2
4B16CF5-16	97 -	4
4B16CF5-9	88 - 3	2
4B16CF6-19	79 -	2
4B16CF7-12	92 -20	4
4B16CF7-13	89 - 3	
	89 -14	4
4B16CF7-14	53 -30	2
4B16CF7-16	90 -	2
4B16CF7-22	79 -	4
4B16CF8-13	88 -	2
4B16CF9-12	17 -25	2
4B16CP10-20	136 -	2
4B16CP3-6	82 -	2
4B16CP3-8	88 -	
	116 -31	3
4B16CP3-9	136 -	2
4B16CP4-12	91 -	1
4B16CP4-7	91 -	1
4B16CP4-9	90 -11	
	90 -32	2
4B16CP5-6	136 - 4	2
4B16CP6-10	136 -37	2
4B16CP6-12	306 - 2	2
4B16CP6-14	87 -	1
4B16CP6-9	92 -	4
4B16CP7-7	87 -	1
4B16CP8-12	55 -	2
4B16CP8-19	92 -11	2
4B16RF4-12	70 -	8
4B16RF5-16	65A-	4
4B16RF6-13	66 -	4
4B16RF7-12	26 -14	2

PART NUMBER	FIGURE AND INDEX NUMBER	QUANTITY
4B16RF8-24	80 - 7	8
4B16RP4-13	90 -10	1
4B16RP4-14	90 -	2
4B16RP5-15	79 -	2
4B16RP6-10	99 - 7	2
4B16RP6-8	92 -23	4
4B16RP7-24	89 -	
	96 -12	3
4B18-5-290	34 -	2
4B18-8-40	35 -	1
4B18B3-64	34 -	4
4B18B5-51	34 -27	4
4B19-B4-005	125 -	4
4B19B8-013	26A-	2
4B19S10-013	29 -	2
4B19S10-014	27 -31	2
4B19S16-016	123 -25	
	123 -32	4
4B19S3-029	71 -11	2
4B19S3-100	34 -	2
4B19S5-005	123 - 3	2
4B19S6-011	243 - 2	2
4B20-53-020	130 -	2
4B20B12-028	38 -	1
4B20B7-005	232 -16	4
4B20B7-006	26A-29	4
4B20S3-009	18 -	32
4B20S4-008	90 -	2
4B20S4-010	153 -	4
4B20S5-809	34 -	4
4B20S6-20	90 -	1
4B20S6-24	90 - 8	1
4B20S6-25	90 -	1
4B20S7-006	26A-	4
4B20S7-28	91 -	1
4B21-B3-005	130 -14	1
4B21-B4-005	125 -	4
4B21-S3-005	139 -	
	139 -	2
4B21-S3-112	130 -19	1
4B21-S4-016	125 -	1
4B21-S5-009	130 -18	1
4B21-S5-017	130 -20	1
4B21-53-016	79 -	2
4B21B3-007	262 -	4
4B21B4-021	38 -33	1
4B21B8-024	129 -14	2
4B21MS4-012	129 - 9	4
4B21S3-007	55 -43	
	262 -18	10
4B21S3-010	55 -37	4
4B21S3-020	38 -55	2
4B21S3-100	311 -	2
4B21S4-010	129 -	4
4B21S4-112	131 -17	2
4B21S5-019	26A-34	
	26A-	8
4B21S5-020	38 -57	2
4B21S8-024	129 -	2
4B21S8-112	263 - 4	4
4D1-4-110	275 -	1
4D1-4-122	280 -	2
4D1-8-214	280 -	1
4D1-8-280	279 -	1
4D1-8-450	280 -	1
4G2-16	258 -	
	259 -49	8
4G3-14	289 -	2

PART NUMBER	FIGURE AND INDEX NUMBER	QUANTITY
4G3-20	163 -	
	288 -	2
4G3-24	156 -	
	288 -	
	292 -	3
4G3-28	155 -	
	156 -	
	288 -	
	293 -	5
4SB7C	91 -	1
4S3-D10-10	150 -	1
4S3-D10-12	245 -	2
4S3-D10-24	150 -	1
4S3-D10-7	293 -	AR
4S3-D416-8	141 -17	2
4S3-D8-10	292 -	4
4S3-10-10	35 -21	
	100 -48	
	175 -	
	175 -	14
4S3-10-12	71 -	
	88 -20	
	100 -	14
4S3-10-14	90 -	1
4S3-10-16	146 -	
	175 -	
	175 -	14
4S3-10-17	35 -35	6
4S3-10-21	273 -19	1
4S3-10-22	35 - 8	
	170 -	
	273 -	4
4S3-10-23	235 -11	4
4S3-10-24	170 -	4
4S3-10-28	273 -21	1
4S3-10-4	100 -	1
4S3-10-5	82 -35	2
4S3-10-6	85 -27	
	100 -	4
4S3-10-64	70 -	1
4S3-10-96	71 -69	1
4S3-10D7	86 -	1
4S3-4-6	141 -	5
4S3-416-10	280 -14	1
4S3-416-13	310 -13	16
4S3-416-3	101 -	2
4S3-416-4	141 -11	2
4S3-416-6	100 -	
	101 -	4
4S3-416-7	170 -14	2
4S3-6-8	288 -13	2
4S3-616-20	35 - 9	
	35 -17	2
4S3-616-4	85 -25	1
4S3-8-10	167 -	
	309 -41	
	309 -48	18
4S3-8-20	290 -	1
4S3-8-26	309 -47	16
4S3-8-33	263 -27	2
4S3-8-36	263 -28	2
4S3-8-8	276 - 4	4
4S3D10-10	287 -	2
4S3D10-19	68 -28	2
4S3D10-22	88 -13	2
4S3D10-4	162 -	2
4S3D10-5	281 -	1
4S3D10-7	293 -	AR

PART NUMBER	FIGURE AND INDEX NUMBER	QUANTITY
4S3D10-8	265 -	4
4S3D10-9	86 -	1
4S3D4-16	311 -23	2
4S3D416-40	65 -	2
4S3D516-37	65 -	2
4S3D516-4	136 -34	2
4S3D716-11	90 -	1
4S3D8-3	149 -28	1
4S3D8-6	42 -	
	42 -	6
4S3D8-8	136 -35	2
4S4-D4-20	77 -	4
4S4-D6-7	307 -	
	307 -	2
4S4-10-8	87 -10	1
4S4-4-6	263 -20	2
4S4-5-5	85 -17	1
4S4-6-10	309 -36	8
4S4-6-2	309 -	8
4S4-6-3	309 -	16
4S4-6-30	33 -31	2
4S4-6-8	309 -15	16
4S4-8-16	108 -	
	108 -	4
4S4-8-20	287 - 6	8
4S4-8-26	33 -24	4
4S4-8-27	38 -	
	38A-	4
4S4D12-25	54 -	4
4S4D4-12	42 -	
	42 -	
	91 -	3
4S4D4-14	55 -	1
4S4D4-20	37 -	1
4S4D4-21	40 -	4
4S4D4-22	51 -	1
4S4D4-23	42A-	
	42A-	3
4S4D4-4	53 -	
	278 -19	2
4S4D5-18	101 -	
	101 -	4
4S4D5-8	55 -	1
4S4D6-12	88 - 7	2
4S4D6-19	112 -25	1
4S4D6-25	4 -	4
4S4D6-27	4 -	3
4S4D6-28	4 -	
	65 -	8
4S4D6-30	4 -	
	85 -20	4
4S4D6-6	305 -26	4
4S4D6-76	87 - 8	1
4S4D8-10	164 -	
	165 -	4
4S5	297 -23	6
4S6-4-0.344	128 -	2
4S6-5-0.384	133 -	1
4S7-10-729	129 -	2
4S7-5-2.438	125 - 4	1
4S7-7-4-454	132 -18	1
40-D-8445-2	159 -	
40R-855D	282 -34	1
4000-16	210 -	
	211 -	
4000-26	200 -	
	200 -	
4002-G	74 -	

PART NUMBER	FIGURE AND INDEX NUMBER	QUANTITY
4002-G	108 -	3
4002-2	108 -62	2
4002-2SW	74 - 8	1
40095	170 -	2
4010-18	297 -25	12
402-1B2	321 - 9	
4044	82 -	
4111	162 -	
412266F	143 -25	REF
412266F	165 -24	1
412269F	143 -	1
412270C	143 -	1
412271E	143 -22	1
41759-10-11	193 - 2	2
41759-10-11SH	193 -	2
41759-12-11	193 -	2
41972	201 -40	2
42D10-048	10 -	
	10 -	
	11 -	
	11 -	
	126 -	15
42D10-054	10 -	2
42D10-064	10 -	4
42FW-1018	132 -	2
420-60-0054	288 -17	1
422350-1	298 -	
42535-1.500	272 -31	2
42535-1.500-S	279 -	1
42535-1.500-SH	272 -	
	279 -	3
42535-2.000-S	272 -49	
	279 -	5
42535-2.000-SH	272 -	
	279 -	5
42535-4.000-S	272 -	1
42535-4.000-SH	272 -48	1
4266-312-M	106 - 9	
	106 -11	
	106 -13	
	107 -10	8
4266-362-M	107 -13	1
42737-1.500	279 -	1
43A10866	297 - 3	6
43A10936	297 - 4	6
4345-400-S	108 -37	1
43537-SH	300 - 2	2
43538-SH	300 -	2
43688-150	271 -38	
	271 -44	
	271 -46	
	272 -	
	272 -59	7
43688-200	271 - 3	
	271 - 8	
	271 -10	
	271 -13	
	272 -35	
	279 -	8
43688-300	271 -24	1
43688-400	271 -34	1
43688-450	274 -	1
43907-5.036-S	272 -22	1
43907-5.036-SH	272 -	1
44A11184	297 - 2	6
44B11182	298 - 1	6
44B18574	162 -	
44B25259	297 - 7	6

PART NUMBER	FIGURE AND INDEX NUMBER	QUANTITY
440-1	321 -10	
440-2	321 -11	
440-3	321 -12	
440-4	321 -13	
443-14-2-8	158 -26	3
443-14-2-8AF	157 -28	
	158 -	3
45A-7400-1	182 - 7	
	182 -15	
	182 -21	3
4503-56	141 -10	2
45032	182 -28	1
4574	162 -	4
4581	322 -12	
46-238	290 -	
	290 -	
	291 - 4	3
48132	127 -11	1
48143	121 -	7
48151	176 -	1
48152	153 -	
	264 -27	3
48166	3 -	1
48172	121 -	2
482	307 -22	2
49-C-7573	159 - 2	1
49137	165 -76	2
49138	165 -74	
	166 -	
	168 -41	
	174 - 5	10
49184	165 -	
	289 -	
	290 - 5	
	296 -	10
49196	153 -	1
49296	296 -	1
49556	321 -14	
49557	321 -	
4974Y	289 -10	1
5-2200	268 -	
5-2400	246 - 8	2
5-2500	246 -	
	246 -	4
5-8800	245 -31	1
5B1-12	90 -19	2
5B1-13	154 -	1
5B1-15DH	93 -14	2
5B1-5DH	100 -44	2
5B1-6	90 -72	1
5B150-29-12	141 -	2
5B16	141 -15	2
5B17-C6	218 -26	2
5B17-7A	218 -18	1
5B17C3A	25 -	
	25 -	
	141 - 8	16
5B17C4A	25 -	
	25 -	
	37 - 5	
	270 -	51
5B17C5A	6 -29	
	24 -72	
	25 -31	
	36 -	72
5B17C6A	25 -71	4
5B18-6A	67 -23	1
5B18C10A	67 -21	2

PART NUMBER	FIGURE AND INDEX NUMBER	QUANTITY
5B18C11A	67 -16	3
5B18C12A	67 -	
	67 -	9
5B18C13A	67 -17	2
5B18C25A	141 - 9	2
5B18C6A	37 - 4	6
5B18C7A	67 -19	6
5B19C6A	37 - 8	2
5B2-11	33 -26	
	126 -15	6
5B2-12DH	217 - 8	2
5B2-15DH	144 - 5	
	145 - 3	8
5B23-3	153 -24	2
5B24-5-24	20 -66	
	20 -71	16
5B24-6-24	20 -76	
	20 -81	16
5C5	149 -26	
	149 -27	
	150 -	
	150 -34	
	169 -	9
5C8-11	157 -55	2
5H2-11	100 -	1
5P36	142 -12	1
5P37-3	141 -20	1
5R12-14	243 -	8
5R12-17	243 -	2
5R12-19	242 -	
	242 -11	10
5R12-35	237 -14	4
5R12-4	241 -	4
5R12-48	237 -12	4
5R12-6	241 -	
	241 -	5
5R13-3	271 -	1
5R14-14	225 -13	
	225 -24	6
5R16-37	225 -22	6
5W1-4-14-8	264 -22	2
5W1-4-17-8	264 -19	2
5W1-4-29-4	264 -	2
5W1-4-30-8	264 -	2
5W1-4-50	264 -	2
5W1-4-50-8	264 -	
	264 -25	4
5W1-4-6-11	264 -	2
5W1-6-1-8	267 -21	4
5W1-6-10-15	267 -23	4
5W1-6-16-0	19A-	4
5W1-6-3-8	267 -22	4
5W1-9-15-0	19 -	2
5W1-9-17-14	267 - 6	2
5W1-9-22-0	19 -	2
5W1-9-29-4	267 - 5	2
5W1-9-7-10	267 - 7	2
5000-26	210 -	
	210 -	
	210 -	
	211 -	
	211 -	
	211 -	2
50002-3	210 -	
	210 -	
	211 -	
	211 -	
5008-75	27 -40	2

PART NUMBER	FIGURE AND INDEX NUMBER	QUANTITY
5022-3	153 - 7	2
51-31730-802	43 -	REF
51177	176 -19	
	184 -11	2
516013	272 -	
52-1571-064	298 -	
	298 -	18
52-1571B-064	90 -	2
52B3687-3	285 -	1
527-4D	105 -25	1
53D4988	297 -	6
5455	120 -	
550120	272 -	1
550120-1	272 -	
550120-2	272 -	
550120-5	272 -	1
55620-1	288 -19	1
5574	288 -	1
5579	168 -	
	169 -	12
575	307 -15	2
5800-02	24 -	24
583-12	314 -	
583-3	314 -	
583-6	314 -	
58595	307 -	12
59062	321 -15	
597	314 -28	
6	53 - 8	1
6-140	298 -	1
6-550-76	265 -54	2
6NCC1312YP	90 -	3
6R2N2	297 -24	6
600-001-10-0S	64 -	36
60417	292 -	1
60418	292 -	1
6042H39	185 - 2	1
6043-3-3-5	24 -63	2
6043-3-3-6	80 - 3	2
6043-3-4-4	30 -53	
	80 -	3
6043-3-6-7	14 -	2
6043-3-6-8	14 -36	2
6043-3-7-6	27 -	2
6043-3-8-6	27 -38	2
6043-4-3-4	25 -52	2
6043-4-3-5	25 -	2
6043-4-4-4	9 -	
	29 -63	4
6043-4-4-5	28A-56	2
6043-4-4-6	28 -28	
	28 -53	
	28A-30	6
6097	270 -15	1
61037	298 -21	6
61046	298 -24	6
61048A	298 -20	6
61955	298 -19	6
61956	298 -18	6
61959	298 -17	6
61960	298 -16	6
6200ZZ	70 -	
6231	270 -14	1
62829	102 -	1
63125	307 -	1
63393	102 - 6	1
64/30000	140 -66	1
64/90506	140 -65	1

PART NUMBER	FIGURE AND INDEX NUMBER	QUANTITY
656767	144 -	
667494	150 -59	REF
667494	293 -25	
	293 -	2
667498	293A- 2	1
667499	294 - 1	1
667502	150 -60	REF
667502	293 - 1	1
668-3-FR	308 -	
	308 -	2
67WA200	117 - 6	1
67WA200-1	117 -	1
67WA200-2	117 -	
67WA200-3	117 -	
672636	177 -15	1
674-3-9-FR	130 -	1
676-3-6-FR	164 -48	1
6800-02	24 -	10
6800D-02	24 -	
6810-02	74 -	1
6810-054	29 -	
	29 -	4
6820-02	24 -	12
686862	177 -	
6950-S-10-20	9 -	2
6951-S-06-6	9 -	4
6952-K	141 -12	2
6952-1	141 -	
6952-1L	141 -	2
7-140	157 -	3
7-2847-79	260 -	2
7R2-12D	232 -14	2
7R3-12D	232 -10	2
7R4-19D	242 -20	2
7S13-1032-10A	110 -29	
	111 -42	2
7S13-1032-13	16 -20	
	19 -34	16
7S13-1032-14	12 -24	2
7S13-1032-16	7 -	
	16 -	31
7S13-1032-18	16 -	17
7S13-1032C-14	13 -	
	13 -	4
7S13-1032C-16	13 -	2
7S13-1032C10	55 -42	2
7S13-1032C16	7 -	
	23 -75	
	23 -78	10
7S13CN1032-8A	22 -	60
7S13CN832-10A	22 -	58
7S13CN832-8A	22 -	56
7S14-10-32-9A	270 -	
7S14-1032-8A	309 -19	8
7S14-1032C11A	278 -42	6
7S14-1032C8A	25 -	
	278 -43	14
7S14-1032C9A	25 -	
	78 -	12
7S14CN1032-10	111 -	1
7S14CN1032-10A	13 -	
	13 -	6
7S14CN832-15A	18 -57	2
7S14CN832-16A	294 -	8
7S14CN832-8A	294 -	5
7S15C-10-7	13 -	4
7S16-10-10	19A-	
	21 - 6	

PART NUMBER	FIGURE AND INDEX NUMBER	QUANTITY
7S16-10-10	25 -	18
7S16-10-16	71 -	20
7S16-10-25	71 -54B	2
7S16-10-26	71 -	2
7S16-10-8	25 - 5	
	67 -	52
7S16-10-9	22 -15	1
7S16-8-7	24 -80	40
7S16CN8-16	294 - 8	2
7S16C10-7	67 -50	6
7S21-10-11	22 -	4
7S23-416-13	10 -	
	10 -	102
7101-2	269 -35	1
719-10	321 -16	
73-22015	29 -64	REF
73-22015	30 -38	1
731KN-02	140 -	
733	321 -17	
738-64-6	86 - 9	2
73900	103 - 5	1
74164	95 -37	2
74220	18 -12	
	18 -27	32
754-3-2-6	289 -39	2
755-10-2-8	208 -	2
755-12-2-6	293 -30	1
755-14-2-8	168 -	
	168 -	4
755-2-2-6	163 -	1
755-2-6	293A- 4	2
755-3-2-6	127 -	
	155 -	
	163 -	
	163 -18	
	164 -	
	172 -	
	173 -	
	297 -	
	297 -	22
755-4-2-6	142 -16	
	163 -	
	174 -	
	288 -31	
	290 - 8	
	293A-21	
	293A-22	13
755-5-2-6	163 -	1
755-5-2-8	169 - 5	4
755-5-4-6	287 -41	7
755-6-2-6	208 -	
	297 -	8
755-6-2-8	169 -	
	200 -	2
755-7-2-6	175 - 6	
	175 -16	3
755-8-2-6	293 -	1
755-8-2-8	200 -	1
7550Y-0A-79.10	128 -	
7579X-0C	130 -	
758-4	252 -	
	253 -44	
	282 -	3
758-6	258 -	
	258 -13	4
769-6	258 -18	2
79HA-38-02	77 -	23
791-E-6	201 - 2	1

PART NUMBER	FIGURE AND INDEX NUMBER	QUANTITY
795-7	148 -17	1
795-9	150 -	1
795-9R	150 -	1
796-36	253 -19	1
8	321 -25	
8-3044-75	258 -39	
	259 -32	4
8-32NC3	157 -	
	158 -	22
8C3-2-051	7 -10	2
8C3-3-064	16 -14	1
8C4-3	112 -21	
	140 -	
	154 - 9	
	154 -17	
	157 -	
	158 -11	
	161 - 6	
	164 -	
	164 -	
	165 - 7	
	165 -	
	261 -28	
	273 -	15
8C5	153 -23	1
8C7B-2-12	159 -	1
8C7B10-21	162 -	1
8C7B10-5	162 -	1
8C7B10-7/8	153 -	1
8C7B10-9	187 -	6
8C7B2-4	162 -	1
8C7B2-9	159 -	1
8C7B3-12	160 -11	1
8C7B3S4	162 -	1
8C7B6-16	158 - 9	1
8C7B6-5-8	157 -	1
8C7B6S9	168 -11	2
8C7B7-15	172 -	1
8C7B8-4	169 -53	1
8C7B8-8	158 - 8	1
8C7B8S-2-1/2	257 -	1
8C7B8S-6-1/2	257 -	1
8T3A	321 -18	
80150	271 -47	REF
80150	272 - 1	1
80151	271 -12	1
809-2	3 -	
	147 - 8	8
82648-6	203 -	
	203 -	
	205 -	
	205 -	16
831-8-100	195 -18	1
831-8-50	195 -24	1
83736	164 -13	1
83737	164 -14	1
83750	165 -36	1
83805	165 -35	1
84K0273	299 -	1
840472	299 -	1
8419-63	95 -50	2
86283	166 -25	REF
86283	125 -27	1
865F25-038	140 -	
8656-10A	83 -18	1
8656-110A	83 -	1
8656-146	83 -	1
8656-165	83 -	1

PART NUMBER	FIGURE AND INDEX NUMBER	QUANTITY
8656-165-950	83 -	
8656-171	83 -	1
8656-188	83 -33	1
8656-25	83 -36	1
8656-3A	83 -22	1
8656-33A	83 -45	1
8656-45	83 -58	1
8656-46	83 -	2
8656-46-1	83 -46	2
8656-48	83 -10	1
8656-5	83 -21	1
8656-51	83 -47	4
8656-53	83 -48	4
8656-54	83 -13	1
8656-6A	83 -17	1
8656-64	83 -44	2
8656-65B	83 -34	1
8656-65B-950	83 -	
8656-66	83 -35	1
8656-66-950	83 -	
8656-67	83 -37	1
8656-70	83 -38	1
8656-71	83 -39	1
8656-72	83 -	1
8656-75	83 -63	1
8656-76	83 -67	1
8656-77	83 -66	1
8656-78A	83 -60	2
8656-79A	83 -61	1
8656-81	83 -19	1
8656-82	83 -30	1
8656-83	83 -49	1
8656-90	83 -28	4
8656-91A	83 -20	1
8656-92	83 -29	1
8656-93	83 -32	1
8657-10	95 - 9	2
8657-38	95 -29	4
8657-48	95 - 2	2
8657-50	95 -25	2
8657-53	95 -42	8
8657-54	95 - 6	2
8657-55	95 -47	2
8657-6	95 - 8	2
8657-62	95 -28	4
8657-65	95 -52	2
8657-71	95 -38	2
8657-9	95 - 4	2
8657A-45	95 -43	2
8657A-5	95 -14	2
8657A-66	95 -	
8657A-66A	95 -	
8657A-66B	95 -	
8657A-67	95 -35	2
8657A3	95 -15	2
869A-6TT	257 -24	1
870491	299 -22	1
871209	297 - 5	6
871357	299 -55	2
8747K3	182 -	
8749K11	182 -	
890100	175 -35	REF
8916K689	178 - 6	1
8916K703	182 -16	4
8923	288 -	
8949K11	182 -	
9C1-1-3	7 -	
	77 -36	

PART NUMBER	FIGURE AND INDEX NUMBER	QUANTITY
9C1-1-3	77 -	5
9C1-1-4	73 -	2
9C1-1-5	3 -	
	5 -49	
	7 -19	
	12 -25	
	29 -	
	32 -	
	61 -11	
	110 -32	
	111 -49	
	221 -21	
	287 -29	12
9C1-1-6	57 -13	2
9C1-1-7	32 -	
	73 -	3
9C1-2-10	308 -31	1
9C1-2-3	77 -	2
9C1-2-5	7 -	
	32 -	
	53 -14	
	61 -	
	307 -28	6
9C1-2-7	32 -	
	32 -	10
9C1-2-7-1/2	265 -45	2
9C1-3-10	3 -45	1
9C1-3-12	8 -16	2
9C1-3-4	61 - 6	1
9C1-3-5	5 -45	2
9C1-3-6	14 -	2
9C1-3-7	32 -	
	64 -17	
	74 -	
	198 -	4
9E1-1-12	19A-	
	19A-	8
9E1-1-4	297 -	8
9E1-1-8	170 -	8
9E1-17-4	5 -	
	5 -	3
9E1-2-12	5 -	1
9E1-3-12	175 -	
	175 -	3
9E1-3-2	165 -47	1
9E1-8-10	5 -	1
9E1-8-8	161 -24	2
90100-1	210 -	
	211 -	2
90100-2	200 -	
	200 -	2
90100-4	210 -	
	210 -	
	211 -	
	211 -	4
9033-170AL	95 -	1
9033-170AR	95 -	1
9033-170L	95 -	1
9033-170R	95 -	1
9033-70BL	95 -	1
9033-70BL-800	95 -	
9033-70BR	95 -	1
9033-70BR-800	95 -	
9033-70CL	95 -	1
9033-70CL-800	95 -	
9033-70CR	95 -	1
9033-70CR-800	95 -	
9033-70L	95 -36	1

PART NUMBER	FIGURE AND INDEX NUMBER	QUANTITY
9033-70R	95 -	1
9033-89	95 -49	2
9034-68A	83 -64	2
9034-74	86 -31	REF
9034-74	83 -62	1
9034-84	83 -50	1
9034-85	83 -51	1
9048-26F	152 -28	1
9048-3695	152 -	
9119-12-A1	102 -18	1
9147-102L	95 -	1
9147-102R	95 -	1
9147-126	95 -	2
9147-146	95 -	2
9147-2L	95 -20	1
9147-2R	95 -	1
9147-23	95 -22	2
9147-26	95 -21	2
9147-37	95 -26	2
9147-39	95 -27	2
9147-4L	95 - 1	1
9147-4R	95 -	1
9147-40	95 -44	4
9147-42	95 -18	8
9147-46	95 -	4
9147-46-1	95 -40	4
9147-51	95 -41	8
9147-61	95 -51	2
9147-66	95 -34	1
9147-66C	95 -	
9147-85	95 -17	2
9148-102	83 -	1
9148-126A	83 -	1
9148-2	83 -52	1
9148-23	83 -	
9148-23A	83 -57	1
9148-26	83 -	
9148-26A	83 -53	1
9148-270	83 -56	1
9148-4	83 - 1	1
9148-4-950	83 -	1
9148-55	83 - 8	1
9148-9	83 -12	1
9148-94	83 -24	1
9151-104L	95 -	1
9151-104R	95 -	1
9151-13	95 -10	2
9151L	93 - 1	REF
9151L	95 -	1
9151R	93 -	REF
9151R	95 -	1
9152	82 - 1	REF
9152	83 -	1
9152-104	83 -	1
9152-13	83 - 2	1
91750-3	273 -10	1
926P-18	312 -18	
93750-3	272 -58	1
94510-2	271 -23	1
9555	153 -10	
	153 -17	2
9600	222 - 1	1
97-3100PR-16-412P	146 - 2	1
98264-2-150	34 - 3	2
98265-1-080	177 - 9	6
98265-1-110	16 -	
	32 -	10
98265-1-120	32 -	4

PART NUMBER	FIGURE AND INDEX NUMBER	QUANTITY
98265-1-140	7 -	2
98265-2-160	40 -	
	40 -	
	52 -13	
	52 -	
	77 -	35
98265-2-200	52 -	
	52 -	2
98265-2-210	34 -22	2
98265-2-220	52 -	1
98265-2-230	52 -	1
98265-2-250	52 -	1
98265-2-330	52 -	1
98265-3-270	34 -41	1
98265-3-280	32 -	
	52 -	
	52 -	3
98265-3-290	52 -	1
98265-3-300	32 -	
	32 -	3
98265-3-340	77 -	1
98265-4-340	32 -	1
98265-4-390	32 -	
	52 -21	2
98292-6-560	45 -12	2
98479	268 -	
	268 -	8
98480	268 - 9	
	268 -10	8
986-0061	321 -26	
986-1002	315 -27	
	315 -	
9881	95 -	
99785-2	34 -	2
99833-C.130	32 -	
	177 -	14
99833-P.130	7 -	
	16 -	
	34 -13	
	34 -	
	40 -	
	41 -	
	41 -	
	45 -	
	46 -	17
99834-1-140	45 -17	2
99834-2-160	35 -47	10
99834-2-170	35 -48	4
99834-2-180	287 -28	2
99834-3-300	32 -	2
99834-3-340	32 -	1
99835-1-140	42 -	2
99835-1-150	42 -	
	42 -	12
99835-2-160	40 -	3
99836	7 -	
	16 -	
	32 -	
	32 -	
	32 -	
	32 -	
	32 -	
	32 -	
	34 -	
	34 -	
	35 -	
	40 -	
	45 -13	

PART NUMBER	FIGURE AND INDEX NUMBER	QUANTITY
99836	45 -	
	52 -	
	52 -14	
	52 -	
	52 -22	
	52 -	
	73 -	
	77 -37	
	77 -	
	177 -	
	287 -	
	297 -	
	308 -	
	316 -	124
99871-P-.098	34 - 6	2
99947-C.130	32 -	
	42 -	
	42 -	28
99947-P.130	36 -	
	40 -	
	40 -	
	42 -	
	43 -69	
	62 -	
	62 -	
	63 -	
	63 -	
	77 -	
	77 -	32
99963	285 - 4	
	287 -	
	287 -	4

RESTRICTED

LITHO IN CANADA

RESTRICTED

LITHO IN CANADA