RESTRICTED

AIR PUBLICATION

2653N

VOLUME I

MOSQUITO B Mk. 35 AIRCRAFT

Prepared by direction of
the Minister of Supply

A. C. Powlett.

Promulgated by Order
of the Air Council

J. H. Barnes.

AIR MINISTRY

This label issued with A.L. No. 10, June, 1949

AMENDMENT RECORD SHEET

Incorporation of an Amendment List in this publication is to be recorded by inserting the Amendment List number, signing in the appropriate column, and inserting the date of making the amendments

A.L. No.	AMENDED BY	DATE
1-6	Incorporated in this reprint	Dec. 1947
7-22		JUN 50
23		DEC 50
24		DEC 52
25	J Duke	17-3-53
26	J Duke	MAY 1953
27	J Duke	MAY 1953
28	J Duke	JUN 1953
29	J Duke	SEP 1953
30	J Duke	APR 1954
31		MAY 1954
32	J Duke	
33	J Duke	APR 1954

A.L. No.	AMENDED BY	DATE

(Continued overleaf)

Ted Green.

Amendment Record Sheet (continued)

A.L. No.	AMENDED BY	DATE

A.L. No.	AMENDED BY	DATE
*		

*An Amendment Record Continuation Sheet (R A F Form 2094A) will be required when this page is full. Order it now.

123 M/C M45854 2/48 200 C.B.& S.Ltd. Gp.30

NOTE TO READERS

The subject matter of this publication may be affected by Air Ministry Orders, or by Volume 2, Part 1 leaflets in this A.P., in the associated publications listed on the page facing the Leading Particulars, or even in some others. If possible, Amendment Lists are issued to correct this Volume accordingly, but it is not always practicable to do so. When an Order or leaflet contradicts any portion of this publication, the Order or leaflet is to be taken as the overriding authority.

Each leaf bears the date of issue and, when applicable, the number of the Amendment List with which it was issued. New or amended technical information on new leaves which are inserted when this Volume is amended is indicated by a vertical line in the margin. This line merely denotes a change in the information previously given and is not a mark of emphasis. When a Section or Chapter is issued in a completely revised form, the line does not appear.

★ ★ ★

TARGET TOWING AIRCRAFT

The standard B Mk. 35 aircraft, equipped for the bomber role, incorporates the conversion modifications and is known as the "converted" aircraft. On aircraft equipped for target towing duties, the modification standard varies ; some are " converted " and others are "unconverted" —conversion modifications are not embodied. Conversion modifications are listed in the Introduction, para. 20.

LAYOUT OF

A.P.2653N—MOSQUITO B Mk. 35 AIRCRAFT

VOL. 1 — **SERVICING AND DESCRIPTIVE MANUAL**

Refer to List of Sections opposite

VOL. 2

PART 1	PART 2
General orders and modification leaflets	**(Not used)**

A. Aerofoils
B. Alighting gear
C. Armament
D. Controls
E. Cooling system
F. Electrical equipment
G. Engine starting
H. Fuel system
J. Fuselage
K. Instruments
L. Jigs and tools
M. Misc. equipment
N. Oil system
O. Oxygen system
P. Power unit
Q. Wireless equipment
Z. Modifications

PART 3	PART 4
User unit repairs	**Major repairs**

(Parts 3 and 4 are issued under the number A.P.2019 and 2653, Part 3, and A.P.2019 and 2653, Part 4. These omnibus Parts each cover many Marks of Mosquito aircraft, a list of the Marks being given in the title page of each Part)

VOL. 3

PART 1	PART 2
Schedule of spare parts	**Appendix "A"**

VOL. 4 — PLANNED SERVICING SCHEDULE

Pilot's Notes
2653M & N - P.N.
A separate handbook

RESTRICTED

LIST OF SECTIONS

Leading particulars

Introduction

SECTIONS

1 Pilot's controls and equipment

2 Emergency controls, equipment and exits

3 Controls and equipment at crew stations

4 Instructions for ground personnel

Chap. 1 Loading and C.G. data
2 Ground handling and preparation for flight
3 General servicing

5 Removal, assembly and dismantling operations

6 Electrical and radio installations

Chap. 1 Electrical installation
2 The information previously contained in this chapter, now appears in Chapter 1.
3 Wireless installations
4 Radar installations

7 Description of structure

Chap. 1 Fuselage
2 Main plane
3 Tail unit
4 Flying controls
5 Alighting gear

8 Engine installation

9 Hydraulic and pneumatic systems

10 (Not used, refer to Sect. 6)

11 (Not used, refer to Sect. 4, Chap. 3)

12 Armament installations and servicing

Chap. 1 Guns (Not applicable)
2 Bombing equipment

Appendix 1. Installation of alternative equipment associated with bombing

Sect. 1. Electrical installation

Sect. 2. Radar, radio and bomb sight installations

Note.—*A list of contents is given at the beginning of each section or chapter*

LIST OF ASSOCIATED PUBLICATIONS

	A.P.
De Havilland hydromatic variable-pitch propellers	*1538D*
Hydraulic equipment, Lockheed	*1803 B and C*
Merlin Mk. 113A and 114A aero engines	*2805 C and D*
Pneumatic equipment, aircraft Hymatic....	*4303C*
External finish of aircraft	*2656A*

	A.D.
Hydraulic system, Mosquito, all Marks	*3205*
Mosquito aircraft fuel sytsems	*3206*
Mosquito B Mk. 35—Bomb circuit interconnection	*4536*
Mosquito B Mk. 35—Electrical installation	*4288*
Oil and fuel flows through S.U. single-point injection pump	*2631*
S.U. single-point injection pump	*2630*

LEADING PARTICULARS

NAME .... **MOSQUITO B Mk. 35**
TYPE .... **TWO-SEATER, TWIN-ENGINED, MID-WING MONOPLANE**
DUTY .... **BOMBER AND TARGET TOWING**

Note . . . The principal dimensions are shown in the General Arrangement Illustration, and the control surface settings and range of movements in Sect. 4, Chap. 3.

MAIN PLANE DATA

Aerofoil section. Piercy Section R.A.F.34 (modified camber)

Chord at fuselage side (25 in. from centre-line of fuselage) .... *12 ft. 3 in.*
Chord at tip (25 ft. from centre-line of fuselage).... .... *3 ft. 10 in.*
Incidence .... *1½ deg.*
Dihedral, measured on top face of front spar .... *1 deg.—24 min.±10 min.*
Sweep back at rib No. 4 .... *2½ deg.*

Areas

Wings, without ailerons and flaps .... *350·4 sq. ft.*
Ailerons (17·2 sq. ft. each bottom surface) .... *34·4 sq. ft.*
Aileron trim and balance tabs (each) .... *1·1 sq. ft.*
Flaps (25·4 sq. ft. each bottom surface) .... *50·8 sq. ft.*

TAIL UNIT DATA

Tail plane chord at root, including elevator .... *5 ft. 6·3 in.*
Incidence (Important—refer to Airframe log book) .... *0 deg.—0 min.+10 min.*
—0 min.

Areas

Tail plane with elevators (excluding fuselage width) .... *78·4 sq. ft.*
Elevator (16·71 sq. ft. each) .... *33·42 sq. ft.*
Elevator trim tabs (1·53 sq. ft. each) .... *3·06 sq. ft.*
Fin .... *13·3 sq. ft.*
Rudder, with trim and balance tab.... .... *16·0 sq. ft.*
Rudder trim and balance tab .... *1·16 sq. ft.*

Alighting gear

UNDERCARRIAGE

Type .... *Two retractable, single-wheel units with two shock-absorber struts to each unit*
Track .... *16 ft. 4 in.*
Shock-absorber struts .... *Rubber in compression (D.H. type)*
Wheels .... *Dunlop A.H.8079, 10 x 16*
Tyres .... *I.G.T.11 or I.G.R.11, 15 x 16*
Tubes.... .... *I.G.9*
Tyre pressure.... .... *Refer to Servicing Schedule*
Brakes .... *Dunlop pneumatic, A.H.8129*

TAIL WHEEL UNIT

Type .... *Retractable*
Shock-absorber strut ....*Rubber in compression (D.H. type)*
Wheel .... *Dunlop A.H. 10·191, 5 in.*
Tyre .... *Dunlop Marstrand W.I/30 or W.I.R./30, 8 x 5 in.*
Tube *W.I/35*
Tyre pressure.... .... *Refer to Servicing Schedule*

Power plants

Type .... *"A"*

ENGINES

Type .... *One Merlin 113A and one Merlin 114A, or two Merlin 114A, pressure-liquid cooled, and two-speed supercharged*
Fuel .... *100/130 Avgas (Stores Ref. 34A/75)*
Oil .... *OM-270 (Stores Ref. 34A/32)*
Coolant .... *70% water and 30% ethylene glycol (Stores Ref. 33B/559 + NaMBT concentrate (Stores Ref. 34B/228) at the rate of 40 c.c. per gall. or 70% water and 30% fluid alcohol (Stores Ref. 34B/236)*

OIL DILUTION SYSTEM

Valve type .... *Type FAW/A/221 (Stores Ref. 27V/2688)*
Jet .... *Type C, No. 3 (Stores Ref. 27V/2691)*
Size .... *0·089 in.*
Fuel pressure.... .... *10 lb. per sq. in.*

PROPELLERS

Type .... *de Havilland 3-blade A5/164 or A5/165 with C.S.U. A.Y.122*
Spinner .... *P.30460A C*
Control .... *Hydromatic*
Normal pitch range .... *35 deg.*
Additional for feathering .... *45 deg.*

Tank capacities

FUEL TANKS

Main plane

Outer tanks	2 × 24 gall. 2 × 34 gall.	116 gall.
Inner tanks	2 × 65½ gall. 2 × 78 gall.	287 gall.
Centre tanks	46 gall. 47½ gall.	93½ gall.
Drop tanks, 2 × 100 gall. (if fitted)		200 gall.
Long-range tanks	63 gall. 58½ gall. (pre Mod. 1519 and 1627)	121½ gall.
Total with 100 gall. drop tanks		818 gall.

OIL TANKS

Absolute capacity (each tank)	17¾-18 gall.
Capacity, normal, tail down (each tank)	15¾-16 gall.
Air space (each tank)	1¾-2¼ gall.
Propeller reserve of oil (each)	1 gall.
Long-range oil tank (if fitted)	10 gall.
Effective capacity for each engine with long-range tank, excluding propeller reserve	19¾-20 gall.

COOLANT SYSTEM

Header tank	2 gall. 5 pt.
Radiator and heater unit	4 gall.
Engine	4 gall. 4 pt.
Total (per engine) including pipe system	12½ gall.

INTERCOOLER SYSTEM

Port	19 pt.
Starboard	19 pt.
Total	4¾ gall.

Hydraulic, pneumatic and vacuum systems

HYDRAULIC SYSTEM

Pump	Lockheed Mk. 6 (Stores Ref. 37G/263)
Oil	OF—4 (Stores Ref. 34B/207)
Reservoir capacity	2½ gall.
Total in system	5 gall.
Pressures (pre Mod. 1443)	
Main relief valve	1,850—1,950 lb. per sq. in.
Pressures (Mod. 1443)	
Cut-out valve — cut-out	1,650 + 50 lb. per sq. in.
— cut-in	1,300 lb. per sq. in.
Accumulator—inflation pressure	1,200 lb. per sq. in.

PNEUMATIC SYSTEM

Compressor	Hymatic, S.H.6/2 (Stores Ref. 37G/501)
Pressure in cylinders	450 lb. per sq. in.
Pressure after reducing valve	200 lb. per sq. in.
Pressure at each brake	100 lb. per sq. in.

DE-ICING SYSTEM

Fluid	AL-8 (Stores Ref. 34B/720
Reservoir capacity	1 gall.

VACUUM SYSTEM

Pump	Pesco B.3X'. Mk. 3 (Stores Ref. 37J/53)

A.S.I. pressure head

Position (pressure head)	L/E of fin
Incidence	Zero
Distance from C/L of aircraft	On centre-line
Distance ahead of L/E	9½ in.
Distance from top of fin to centre-line of cover	6½ in.
Tolerance on angular setting	± 2 deg.

Twin static vents are fitted ; one on the port side 51·5 in. forward of bulkhead No. 2 and 3·2 in. below the nose window, the other on the starboard side, 58·75 in. forward of bulkhead No. 2 and 5·1 in. below the nose window.

LEADING PARTICULARS—*continued*

ELECTRICAL SYSTEM

Wiring	....	*Breeze*
Voltage	....	*24 volt*
Generators	*port engine*	*Type U2 (Stores Ref. 5U/2617)*
	starboard engine	*Type O2 (Stores Ref. 5U/3619)*
	or port engine .... } *starboard engine* }	*Type UO (Stores Ref. 5U/2362)*
	or port engine } *starboard engine* }	*Type HX2 (Stores Ref. 5U/4184)*
Voltage regulators	*(with Type U2 or Type UO generators)*	*Type J.2*
	(with Type HX2 and O2 generators)	*Type A.2*

TARGET TOWING EQUIPMENT

Release units	....	*Ottley*

INTRODUCTION

1. The MOSQUITO B Mk. 35 is a mid-wing monoplane constructed mainly of wood and powered with two Merlin engines (*Leading Particulars*) driving de Havilland 3-bladed propellers. It is designed and equipped for the duties of a high and low-level, day and night bomber, target towing (Mod. 1619 and 1627) and carries a crew of two, pilot and navigator/target operator. Guns are not carried.

2. The crew are accommodated side by side, the pilot being on the port side. The backs of both seats are of armour-plate, and there is armour-plate on the forward side of the seat bulkhead. The windscreen and canopy side panels are of the dry-air sandwich type, and the canopy roof has an emergency exit panel incorporated. Hinged side windows give direct vision for approach and landing. Provision is made for fitting instrument-flying practice screens.

3. A compartment forward of the instrument panel is used for sighting the bombs. An alternative sight mounting is located to port of the bomb aimer's observation window; the sight computing equipment is mounted on the port side of the fuselage nose.

4. The flying controls are conventional, with a "W" grip control column and pendulum-type rudder pedals. The control surfaces are operated by tie-rods, cables and chains.

5. The fuselage is of oval tapering cross section, made up in halves, joined along the top and bottom centre-lines. This construction is of two skins of plywood sheeting, suitably reinforced, and separated by balsa in the form of a sandwich with occasional wooden bulkheads, forming a monocoque structure.

6. The main plane is a cantilever structure, consisting of two box spars extending over the full span, with a covering formed by a plywood stressed skin reinforced by span-wise wooden stringers. Ten fuel tanks are housed in the main plane; the inner and outer wing tank-bays are provided with detachable panels on the underside which, when in position, form part of the stressed skin. Two long-range fuel tanks may be fitted inside the bomb bay and fuel drop-tanks can also be fitted under the wing. Hydraulically-operated ply-covered flaps, and metal-covered ailerons are fitted. The main plane is attached to the fuselage by four main bolts, and by additional bolts passing through the flanges of the inner ribs.

7. The tail plane and fin are cantilever structures consisting of two box spars, extending over the full span, wooden ribs and plywood stressed skin. The elevators are of all-metal construction and the rudder is an alclad structure with fabric covering. Combined trim and balance tabs are fitted to all control surfaces, excepting the starboard aileron, the tab of which acts as a balance only. On target towing aircraft, a tail guard, which extends between the fin and tail plane, prevents the targets fouling the control surfaces.

8. The alighting gear consists of two interchangeable single-wheel retractable units, one under each engine nacelle, and a retractable tail wheel unit. The undercarriage and tail wheel units retract backwards under hydraulic power. The shock-absorber struts are of the rubber-in-compression type. The Dunlop twin brakes on each undercarriage wheel are pneumatically operated.

9. The engines are mounted in steel-tube frames attached to the front spar and the undercarriage fixed structure. Combined oil and coolant radiators for each engine are built into the leading edge of the wing, between the engine nacelle and the fuselage. Temperature is regulated by manually-controlled flaps in the radiator duct exits. Integral with each engine is an intercooler, the radiator for which is mounted under the forward part of the engine and has fixed inlet and outlet ducts. A self-sealing oil tank is housed in each undercarriage wheel well, and a twin-compartment long-range oil tank may be carried in the fuselage in the rear of the dinghy compartment. Universal air-intakes are incorporated.

10. Fuel is supplied to the engines direct from the outer tanks, and from the inner, centre and long-range tanks through the

fuel gallery. A booster pump is fitted between the fuel cocks and each engine. The drop tanks are pressurized to feed into the outer tanks, the operation being controlled by a cock mounted adjacent the fuel cocks. A fuel cooler, incorporated in the pipe lines between the fuel gallery and each engine, is mounted externally on the starboard side of the fuselage. The exhaust side of the starboard vacuum pump provides pressure for pressure-venting the centre, inner and long-range tanks, and the port vacuum pump for fuel transfer from the drop tanks. Normally, the outer wing tanks are not pressure vented; they are, however, pressure vented through the drop tanks when the latter are fitted and the fuel transfer cock is ON.

11. The engine-driven accessories include an electric generator, hydraulic and vacuum pumps on each engine, and a Hymatic compressor on the port engine.

12. The hydraulic system operates the alighting gear, flaps and bomb doors. The vacuum system is used to drive the suction-operated instruments on the instrument flying panel and the Mk. 3 bomb sight (if fitted). The exhaust side of the port pump, in addition to supplying pressure to transfer fuel from the drop tanks, also transfers oil from the long range oil tank and operates the T.1 bomb sight computor (if fitted). The pneumatic system is supplied by a Hymatic compressor and operates the wheel brakes, supercharger gear change, and air-intake shutters.

13. On aircraft incorporating Mod. 1128 power for the electrical services is supplied by a d.c. generator, Type O2, mounted on the starboard engine, which charges two 12-volt batteries, connected in series, located on the floor in the rear fuselage. A generator, Type U2, mounted on the port engine, supplies, through a voltage regulator, the a.c. power for special equipment. On aircraft incorporating Mod. 1428, Mod. 1619 and Mod. 1627, power is supplied by two Type UO generators, one on each engine, which charge two 12-volt batteries, connected in series, mounted on the floor in the rear fuselage. Power for the electrical services on aircraft incorporating Mod. 1601, Mod. 1619 and and Mod. 1627 is supplied by two Type HX2 generators, one on each engine, which also charge two 12-volt batteries, connected in series, located on the floor in the rear fuselage.

14. On aircraft with Mod. 1116 embodied, a universal mounting in the rear fuselage accommodates the following alternative cameras; K.24 or K.24 with 46/24 magazine; F.24 or F.61. Photo-flashes may be carried in a multi-flash discharger mounted in the bomb bay rear fairing or engine nacelles.

15. On aircraft with Mod. 1114 embodied, a T.1 bomb sight is installed, the sighting head being mounted in the nose of the fuselage, the computor adjacent on the fuselage wall. An S.O.O. alternative, the low level Mk. 3 bomb sight, utilises the same mounting, and its computor is located above the T.1 bomb sight computor. An A.M.U. with A.P.I. and W.F.A. may also be fitted.

16. The bomb installation permits the following alternative loads to be carried:—

One	4,000 lb. bomb
Four	500 lb. bombs
Four	250 lb. bombs

With the 250 or 500 lb. bomb loads, two additional 250 lb. or 500 lb. bombs, in lieu of drop tanks, can be carried, one under each wing at rib No. 8.

17. The radio and radar equipment fitted in these aircraft varies according to type i.e., converted and unconverted aircraft, and is as follows:—

(1) Unconverted aircraft (pre Mod. 1120, 1121, 1125 and 1180) are fitted with:—

(a) T.R.1143, V.H.F.
(b) A.1134A I/C
(c) R.3090, I.F.F.
(d) A.R.I.5083, Gee, Mk. 2, with T.1154—R.1155 G.P. radio as an alternative.

Note . . .

A.1134A is not fitted when A.R.I. or T.1154—R.1155 is installed.

(2) Converted aircraft (Mod. 1120, 1121, 1125 and 1180) are fitted with:—

(a) A.R.I.5685, Gee-H, Mk. 2, with A.R.I.5829 or A.R.I.5083, Gee, Mk. 2, as an alternative, in lieu of A.R.I.5083, Gee, Mk. 2
(b) R.3121, I.F.F., in lieu of R.3090, I.F.F.
(c) A.R.I.5610, Rebecca, Mk. 4
(d) A.1134A I/C, repositioned and remotely controlled
(e) T.R.1430, V.H.F., in lieu of T.R.1143, V.H.F.

INTRODUCTION—*continued*

Note . . .

*Provision is not made for T.*1154—*R.*1155 *in converted aircraft.*

18. Target towing equipment is installed in aircraft incorporating Mod. 1619 and 1627. This equipment consists of three banner-type target packs which are stowed in a container (one in each compartment) mounted inside the bomb bay. Towing cables extend from the packs to Ottley release units mounted below the fuselage, aft of the bomb bay. A control panel is located on the port side of the wing deck. Certain bombing equipment is not fitted to these aircraft, but they can be readily converted to the bomber role.

19. General equipment includes oxygen supply apparatus, de-icing spray, signal pistol and bomb loading winches. There is an automatically operated fire-extinguishing system installed in each engine nacelle, with alternative manual operation in the cockpit. An automatically inflatable dinghy may be carried.

20. The following conversion modifications outline the differences between converted and unconverted aircraft :—

Mod. No.	*Description*
1012	To de-pressurise B Mk. 35 aircraft
1015	To introduce revised cabin heating
1114	To introduce T.1 bomb sight
1115	To introduce Mk. 3 low level bomb sight
1116	To introduce multi-way bomb distributor
1117	To introduce multi-flash discharger
1120	To introduce Gee-H, Mk. 2
1121	To introduce Rebecca, Mk. 4
1122	To introduce API/AMU revised layout
1123	To introduce W.F.A.
1124	To introduce PR Mk. 34-type navigator's table
1125	To re-design A.1134A installation
1126	To introduce external whip aerial for I.F.F., Mk. 3, G.R.
1128	To introduce O.2 and U.2 generators in place of KX and R
1162	To re-position navigator's parachute stowage
1163	To introduce negative earthing consequential to Mod. 1114
1164	To remove camera plugs and facilities for camera temperature indicator from the nose of the aircraft
1165	To remove portable set and stowage from the nose of the aircraft
1167	To introduce press-to-transmit facilities (T.R.1430) for navigator
1168	To introduce volume control, Type 11, for T.R.1430
1169	To introduce power supply wiring and controls, etc.
1180	To introduce T.R.1430 with external whip aerial but without A.1271 in place of T.R.1143 with A.1271 with internal aerial.
1186	To introduce A.S.I. calibrated in knots and associated labels
1309	To introduce cover for new type voltage regulator—Conc. with Mod. 1128
1422	To remove mounting block for camera control wedge plate

66527 54264 10/52 450 C.B.&S.LTD. GP.30

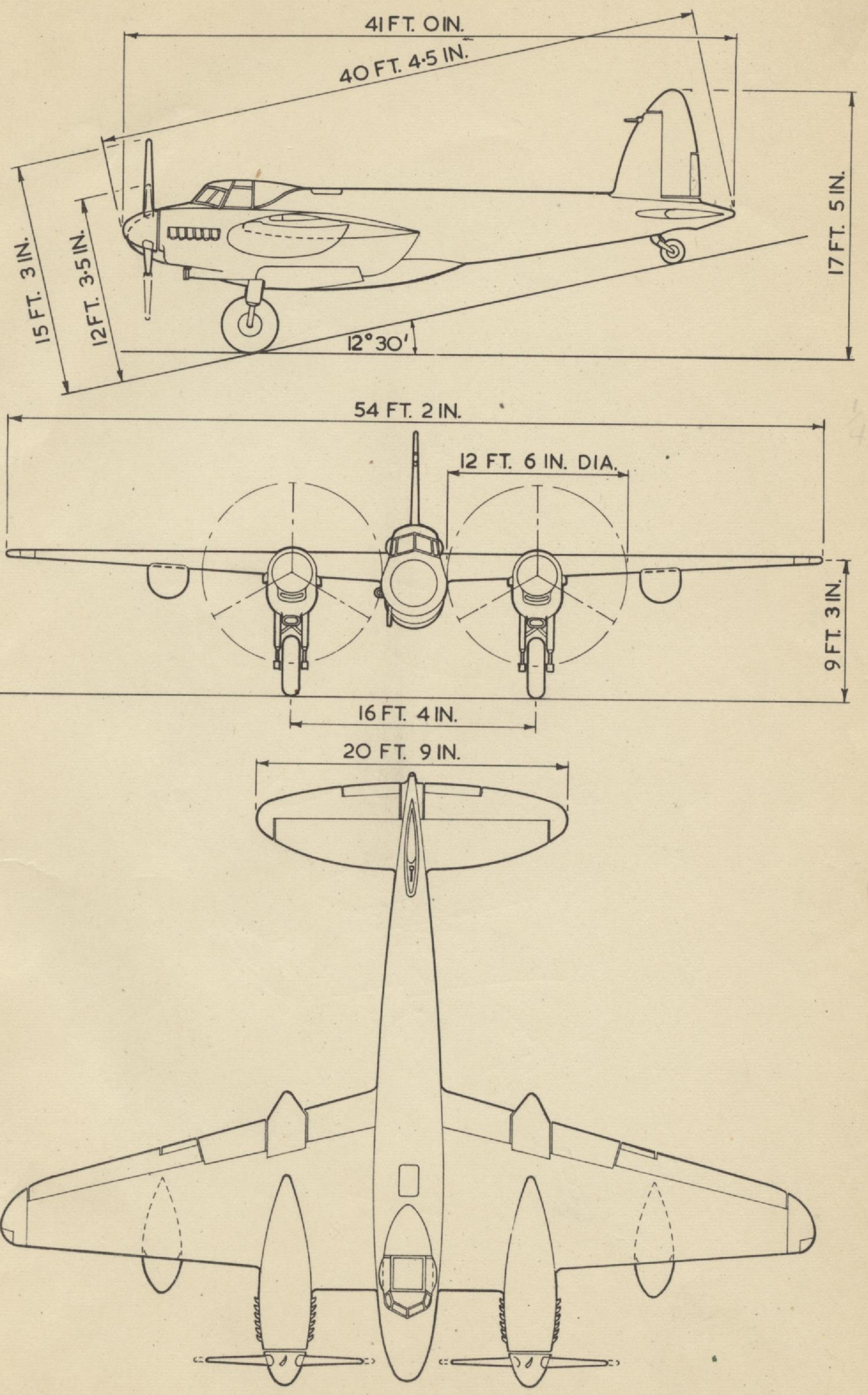

GENERAL ARRANGEMENT

G1185 M22680 7/49 550 C.B.&S.LTD. GP.55.

This leaf issued in reprint
December, 1947

SECTION

1

PILOT'S CONTROLS AND EQUIPMENT

123 M/C M45854 2/48 200 C.B.& S.Ltd. Gp.30

Section 1

PILOT'S CONTROLS AND EQUIPMENT

LIST OF CONTENTS

	Para.		Para.
Introduction	1	*Pilot's seat*	5
Entry to cockpit	4	*Pilot's harness release gear*	6

LIST OF ILLUSTRATIONS

	Fig.		Fig.
Flying controls and instruments	1	*Operational equipment, starboard*	5
Engine controls and instruments, port	2	*Miscellaneous equipment, port*	6
Engine controls and instruments, starboard	3	*Miscellaneous equipment, starboard*	7
Operational equipment, port	4		

Introduction

1. This Section serves as a general guide to the location of all the controls, equipment and instruments controlled by the pilot, and most of those by the navigator or target operator, with the method of operation where this is not obvious.

2. In order to simplify reference to any particular control or item of equipment, the illustrations and the keys which face them are grouped under four main headings as indicated in the List of Illustrations above. Small capital letters in the keys indicate actual markings of items in the aircraft.

3. Some emergency controls are included in their appropriate groups, but reference must be made to Sect. 2 for details of their operation.

Entry to cockpit

4. Entry to the cockpit is made through outer and inner doors fitted in the underside of the fuselage forward of the navigator's seat. Each door can be opened from outside or inside by interconnected handles; the outer door swings downwards and the inner door upwards against the fuselage side where a clip engages the door handle. A hand grip is fitted under the cockpit coaming to assist entry. A ladder, which is telescoped and stowed beneath the bomb-aimer's floor when not required, is provided for normal entry and exit.

Pilot's seat

5. The pilot's seat is adjustable for height by a ratchet lever on the port side.

Pilot's harness release gear

6. Standard safety harness is fitted to the pilot's seat, the shoulder straps being anchored to a spring-loaded cable which gives limited movement without unfastening the harness. The extension is obtained by downward movement of the bolt-type lever fitted on the starboard side of the seat.

RESTRICTED

KEY TO FIG. 1 (FLYING CONTROLS AND INSTRUMENTS)

1 COMPASS VARIATION SETTING CORRECTOR (if fitted)

2 ELEVATOR TRIM TAB CONTROL WHEEL
Operates in natural sense

3 ELEVATOR TRIM TAB POSITION INDICATOR

4 STANDBY COMPASS

5 COMPASS CORRECTOR

6 LANDING LAMP SWITCH

7 SUCTION GAUGE

8 INSTRUMENT FLYING PANEL

9 D.R. COMPASS REPEATER (if fitted)

10 D.R. COMPASS INDICATOR (if fitted)

11 BRAKE LEVER

12 UNDERCARRIAGE POSITION INDICATOR

13 FLAPS POSITION INDICATOR

14 UNDERCARRIAGE SELECTOR LEVER
UP—Neutral—DOWN (pre Mod. 1443)
UP—DOWN (Mod. 1443)
Safety catch must be lifted to select *UP*

15 FLAPS SELECTOR LEVER
UP—Neutral—DOWN

16 D.R. COMPASS CONTROL UNIT

17 BRAKE PRESSURE GAUGE

18 AILERON TRIM TAB CONTROL AND INDICATOR
Operates in natural sense

19 RUDDER PEDALS

20 CONTROL COLUMN

Note.—The following items are not shown in the illustration :—

(a) RUDDER TRIM TAB CONTROL AND INDICATOR
(Fitted centrally on the canopy roof structure forward of the pilot). Operates in natural sense.

(b) PILOT'S SEAT HEIGHT ADJUSTING LEVER
(Fitted on the left of the seat)

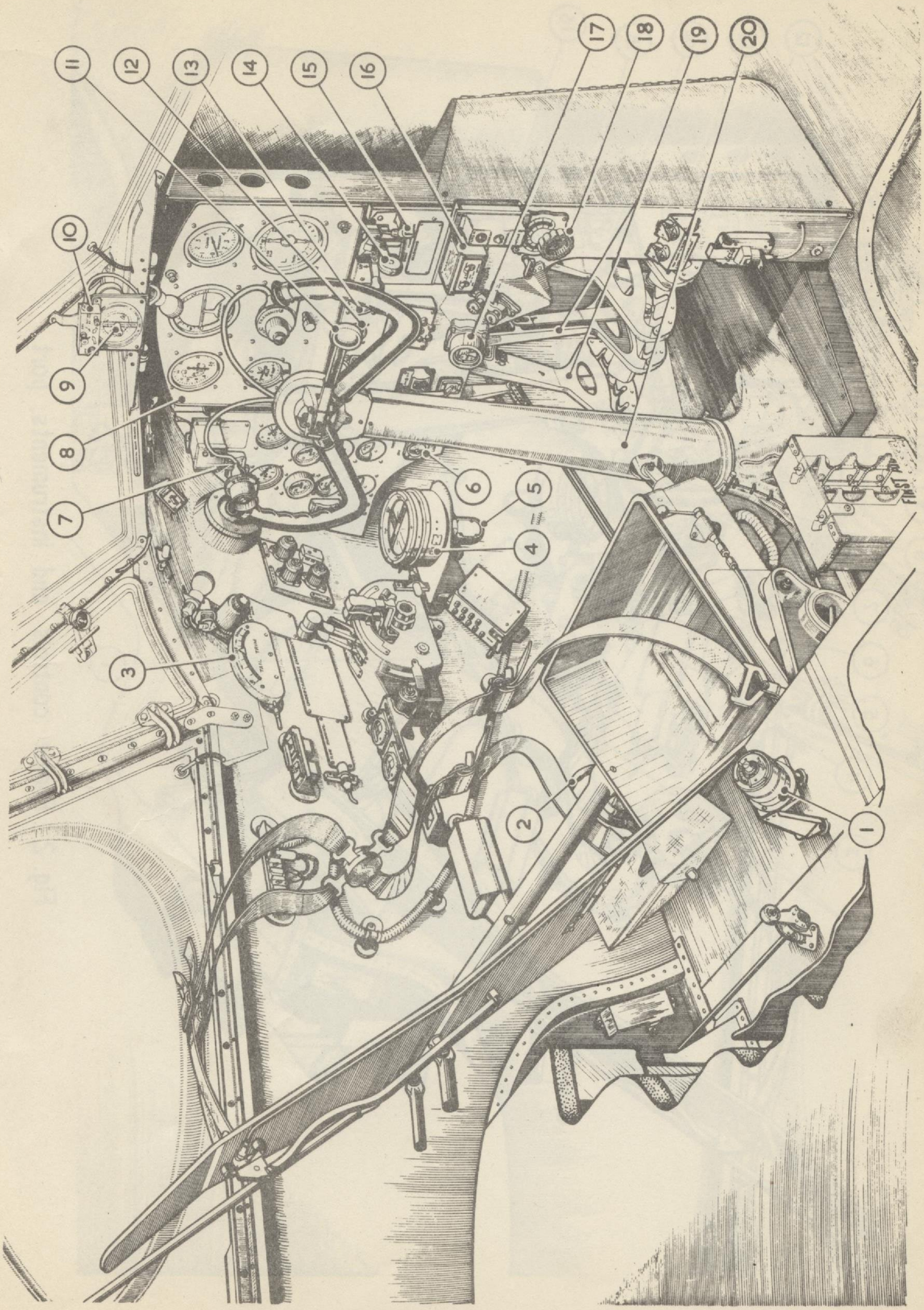

Fig. 1 Flying controls and instruments

RESTRICTED

7876 68203 1/53 450 C. B. & S. LTD. GP 55

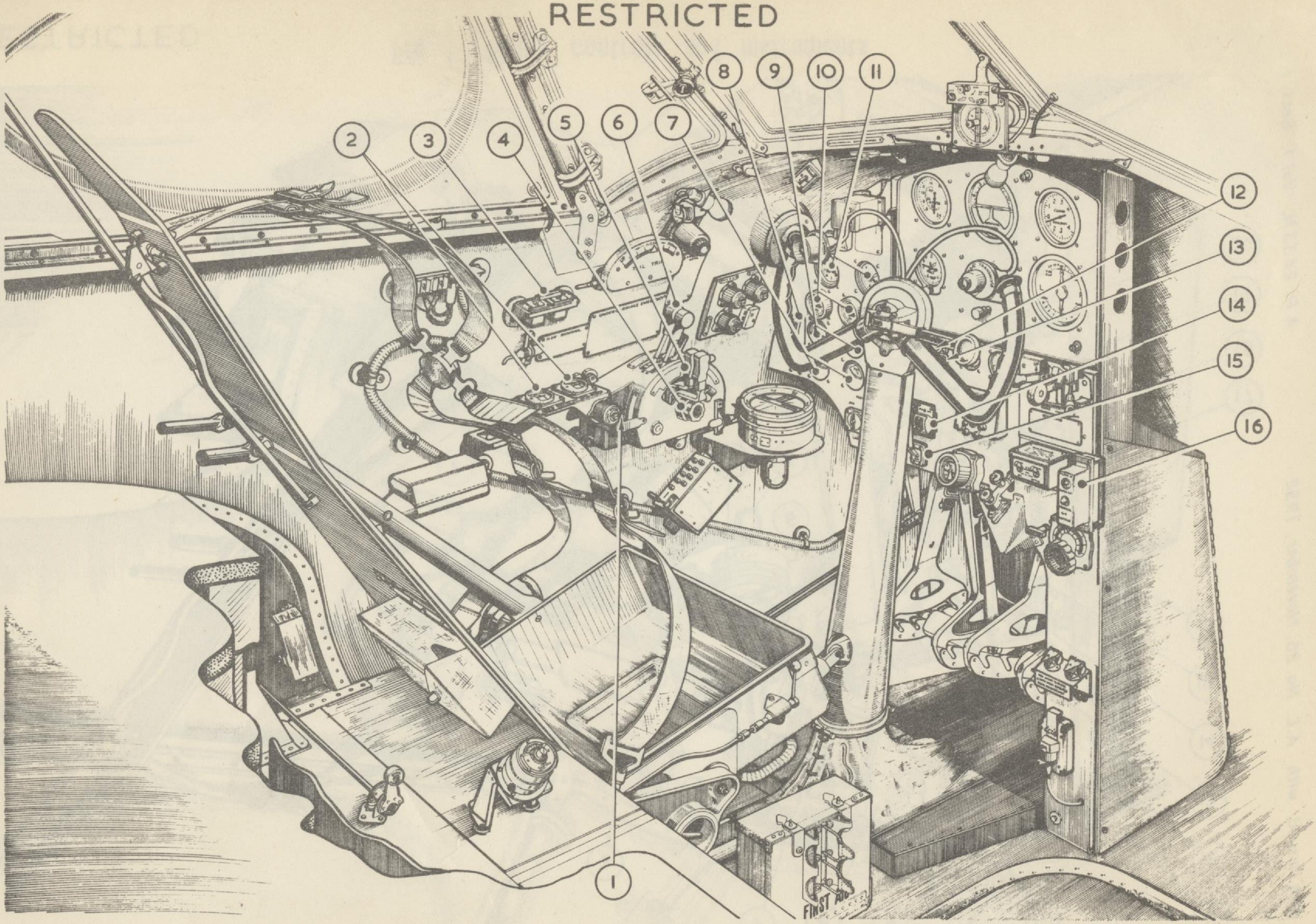

Fig. 2 Engine controls and instruments, port

RESTRICTED

KEY TO FIG. 2 (ENGINE CONTROLS AND INSTRUMENTS, PORT)

1 SUPERCHARGER SWITCH
AUTO—MOD.
Leave in *MOD* on ground except when testing function of automatic gear change

2 TEMPERATURE GAUGES, FOR AIR-INTAKE CHARGE (if fitted)

3 SELECTOR SWITCHES, FOR AIR-INTAKE
HOT AIR—COLD AIR

4 FRICTION ADJUSTING KNOBS
Larger, propeller—smaller, throttle

5 PROPELLER SPEED CONTROL LEVERS
DECREASE R.P.M.—INCREASE R.P.M.

6 THROTTLE LEVERS
SHUT—T.O. & CLIMB—MAXIMUM
At the stops + 12 lb. per sq. in. boost is obtained. Pull back triggers, push levers fully forward to give + 18 lb. per sq. in. maximum boost

7 RADIATOR TEMPERATURE GAUGES

8 OIL PRESSURE GAUGE

9 OIL TEMPERATURE GAUGES

10 BOOST PRESSURE GAUGES

11 R.P.M. INDICATORS

12 ENGINE STARTER PUSH SWITCHES } Operate together in pairs

13 BOOSTER COIL PUSH SWITCHES

14 IGNITION SWITCHES } Mechanically interlocked

15 ELECTRICAL SERVICES MASTER SWITCH

16 TROPICAL AIR-INTAKE FILTER SWITCH
FILTER IN—FILTER OUT

Note.—The following engine controls are not shown on the illustration but are shown in Sect. 3, fig. 3 and 4. These controls are situated on the front face of the front spar ; from left to right they are :—

(a) LONG-RANGE OIL TRANSFER COCKS
ON—OFF
Must be *OFF* at all times except when oil transfer is necessary

(b) *JETTISON TANKS FUEL TRANSFER COCK—ON—OFF*

(c) FUEL COCK
MAIN SUPPLY—OFF—OUTER ANKS
When the fuel cocks are set to *MAIN SUPPLY* both engines are fed through the fuel gallery from the wing inner, centre and long range tanks. When set at *OUTER TANKS*, the wing outer tanks feed their respective engines ; there is no cross feed or any connection between the outer and inner tanks.

(d) *PRESSURE VENT, ON—OFF COCK*
Normally wired at *ON*

(e) *ENGINE CUT-OUT CONTROLS*
Pull to stop engines

This leaf issued with A.L. No. 26, November, 1952

KEY TO FIG. 3 (ENGINE CONTROLS AND INSTRUMENTS, STARBOARD)

1 PROPELLER FEATHERING PUSH SWITCHES

Engine fire warning lamp in the end of each switch

2 FUEL *BOOST PUMP, ON—OFF* SWITCHES

3 IMMERSED *FUEL PUMP, ON—OFF* SWITCH

For transferring fuel from long-range fuselage tanks

4 FUEL PRESSURE WARNING LAMP

LIGHT ON—PUMP PRESSURE LOW

When light shows, long-range tanks are empty and the switch, item (3), must be set at *OFF*

5 FIRE EXTINGUISHER PUSH SWITCHES

Raise shields to operate switches

6 FUEL CONTENTS GAUGE—WING *OUTER TANKS*

7 FUEL CONTENTS GAUGE—WING *CENTRE* AND LONG-RANGE TANKS

8 FUEL CONTENTS GAUGE—WING *INNER TANKS*

9 RADIATOR *COOLING FLAP* CONTROLS AND INDICATORS

10 GENERATOR OUTPUT VOLTMETER

11 GENERATOR WARNING LAMP

Lamp lights when generator is not charging and at all times when the starboard engine is not running. Two warning lamps are provided when Mod. 1428 or 1601 is incorporated

12 OIL DILUTION SWITCHES

PRESS TO OPERATE

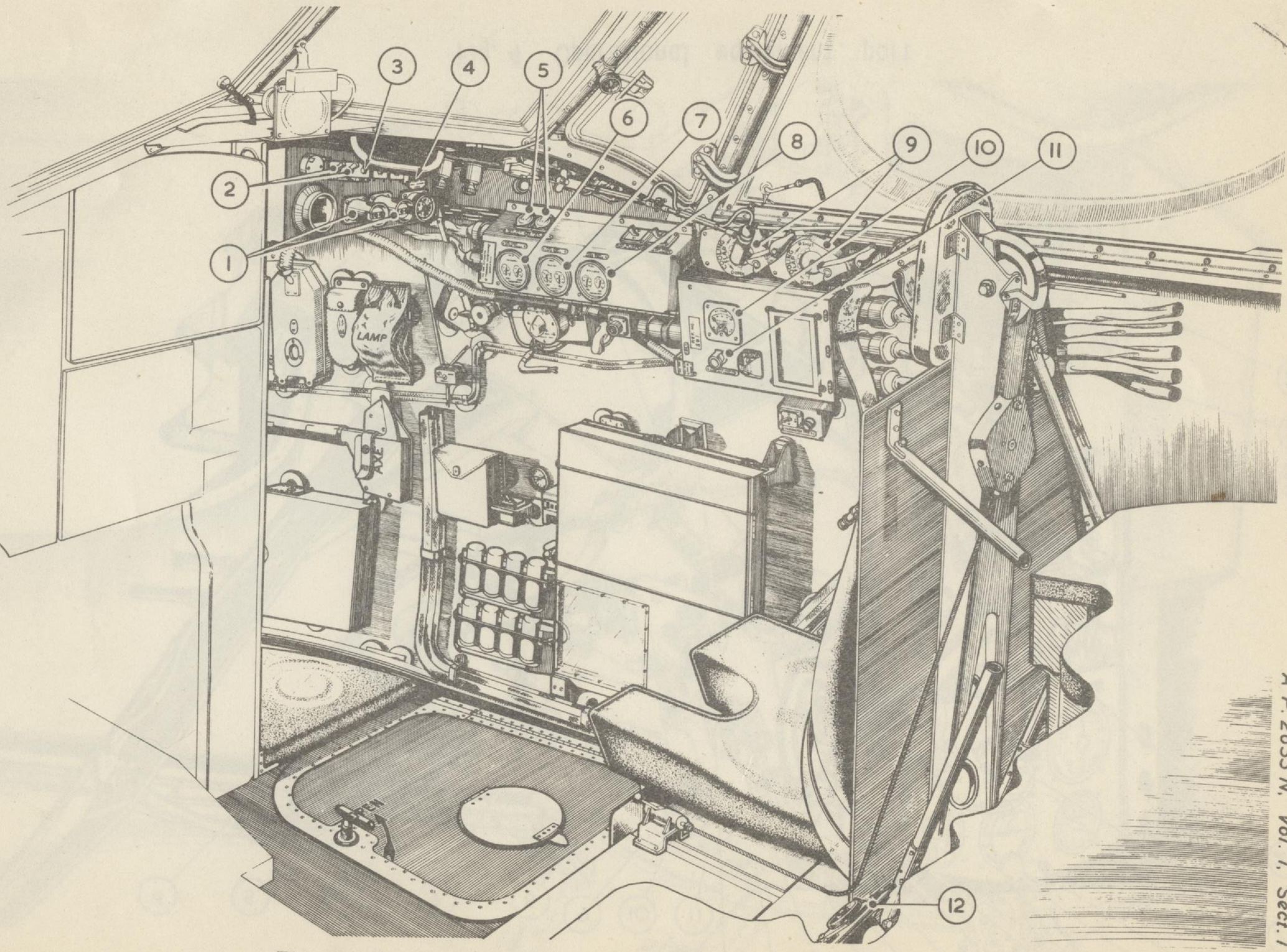

Fig. 3 Engine controls and instruments, starboard

7876 68203 1/53 450 C. B.& S. Ltd. Gp.55

RESTRICTED

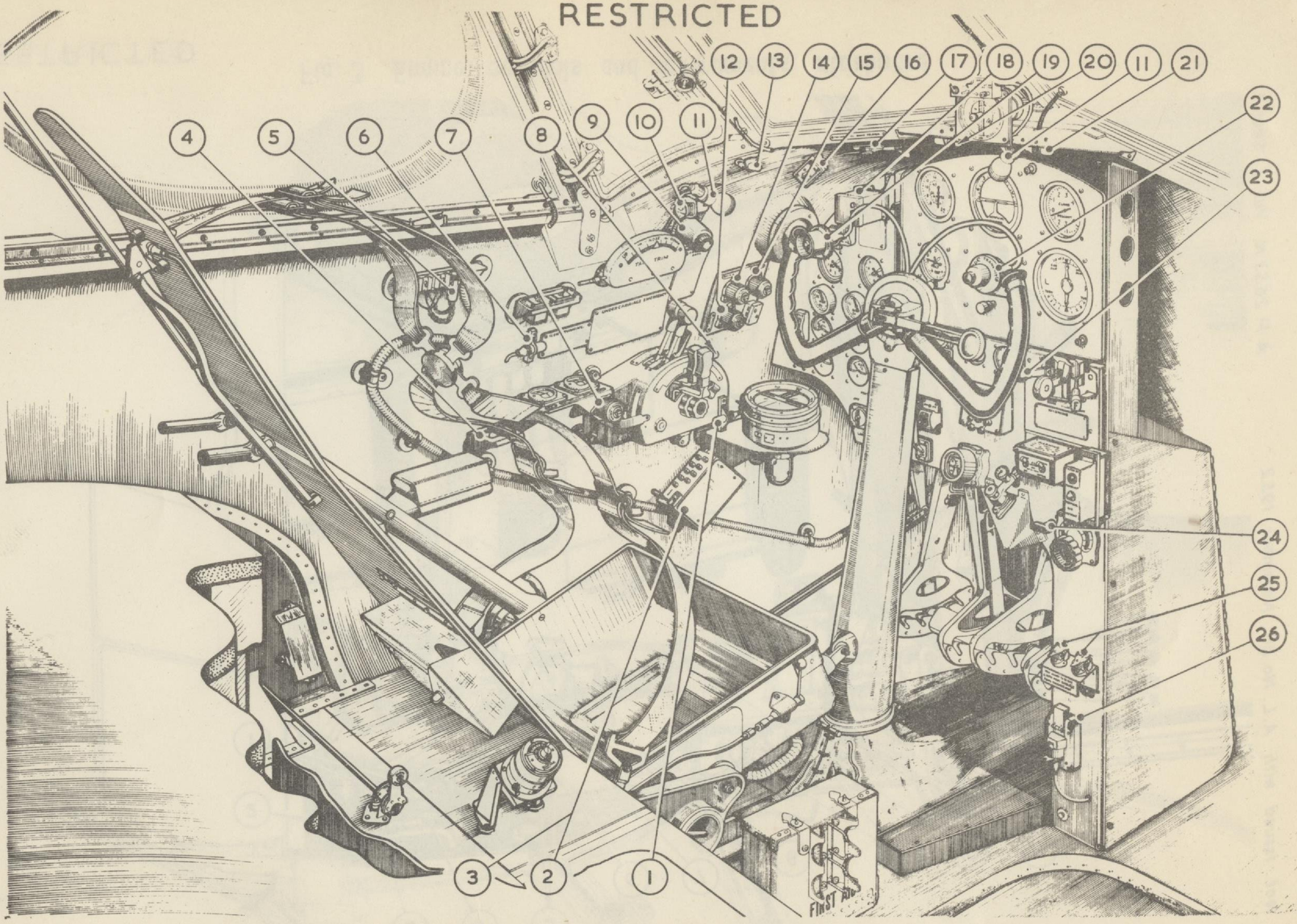

Fig. 4 Operational equipment, port

KEY TO FIG. 4 (OPERATIONAL EQUIPMENT, PORT)

1 FLOOD LAMP FOR CONTROLLER (if fitted)

2 CONTROLLER FOR V.H.F. (pre Mod. 1446)

3 CONTROLLER FOR V.H.F.
(Mod. 1446. When fitted, this item is positioned below the direct vision panel on cockpit coaming)

4 DISTRESS SWITCH

5 PILOT'S MIC-TEL SOCKET

6 FLOODLAMP FOR TEMPERATURE GAUGES

7 DIMMER SWITCH FOR ITEM (6) (if fitted)

8 COMPASS FLLODLAMP

9 VOLUME CONTROL (pre. Mod. 1446)

10 DROP TANK JETTISON SWITCH

11 ULTRA-VIOLET FLOODLAMPS

12 DIMMER SWITCH FOR ITEMS (1) AND (8)

13 PORT FLOODLAMP

14 DIMMER SWITCH FOR ITEM (11)

15 DIMMER SWITCH FOR ITEM (13) AND CENTRE FLOODLAMP

16 EMERGENCY FLOODLAMP SWITCH

17 MECHANICAL BOMB RELEASE FOR 4,000 LB. BOMB

18 INDICATING UNIT, TYPE 237

19 PILOT'S PUSH SWITCH FOR CAMERA OPERATION

20 EMERGENCY FLOODLAMP

21 STARBOARD FLOODLAMP

22 PILOT'S PRESS-TO-TRANSMIT SWITCH

23 BOMB DOOR SELECTOR LEVER
UP—*Neutral*—*DOWN* (pre Mod. 1443)
UP—*DOWN* (Mod. 1443)

24 MECHANICAL BOMB JETTISON TOGGLE

25 SOCKETS FOR FIRING SWITCH PLUG
Black—bombs and photo-flash
Red—multi-flash discharger

26 FIRING SWITCH
Locked in interlock firing switch

Note.—The following items are not shown in the illustration :—

(a) CENTRE INSTRUMENT PANEL FLOODLAMP
(Fitted under the D.R. compass repeater and controlled by item (15))

(b) PILOT'S CAMERA INDICATOR LAMP
(Fitted to the left of the suction gauge)

RESTRICTED

KEY TO FIG. 5 (OPERATIONAL EQUIPMENT, STARBOARD)

1 DRIFT SIGHT COVER
Lift to use sight

2 CAMERA CONTROL UNIT

3 CAMERA HEATER SWITCH (Mod. 1116)

4 AIR TEMPERATURE GAUGE

5 STOWAGE FOR CAMERA CONTROL UNIT LEADS (Mod. 1116)

6 BOMB ANGLE COMPUTOR STOWAGE

7 STOWAGE FOR INSPECTION LAMP

8 STOWAGE FOR INSPECTION LAMP EXTENSION LEAD

9 INDICATING UNIT FOR A.R.I.5610 (Mod. 1121)

10 CHRONOMETER STOWAGE

11 PRESSURE-HEAD HEATER SWITCH

12 NAVIGATION LAMPS SWITCH
OFF—DIM—BRIGHT

13 DIMMER SWITCH FOR INSTRUMENT PANEL STARBOARD FLOODLAMP

14 DIMMER SWITCH FOR ITEM (21)

15 IDENTIFICATION LAMPS SWITCHBOX

16 NAVIGATOR'S TRANSMIT SWITCH

17 SWITCH FOR I.F.F. (if fitted)

18 SELECTOR SWITCH
NAV. HD. LAMP—OFF—ON—MORSE

19 SELECTOR SWITCH *DOWNWARD IDENT. LIGHTS—RED—GREEN—AMBER*

20 CONNECTING SOCKET FOR LEAD FROM WIND FINDING ATTACHMENT (Mod. 1123)

21 LAMP FOR CHARTBOARD
Fixed on an adjustable arm

22 RESIN LIGHT
ON—OFF SWITCH

23 TRANSMITTER, TYPE F SWITCH AND INDICATING LAMP (if fitted)

24 CHART BOARD IN STOWAGE (if fitted)

Note.—The following controls are not shown in the illustration :—

(a) VACUUM SYSTEM CONTROL COCK
(Mounted on the forward face of bulkhead No. 2, to port of the navigator's seat)

(b) MORSE KEY FOR A.R.I.5131 (if fitted)
(Mounted on the forward face of bulkhead No. 2, to starboard of the navigator's seat)

(c) COMPUTOR RELEASE SWITCH
(Clipped to the fuselage, to starboard of the Navigator's seat)

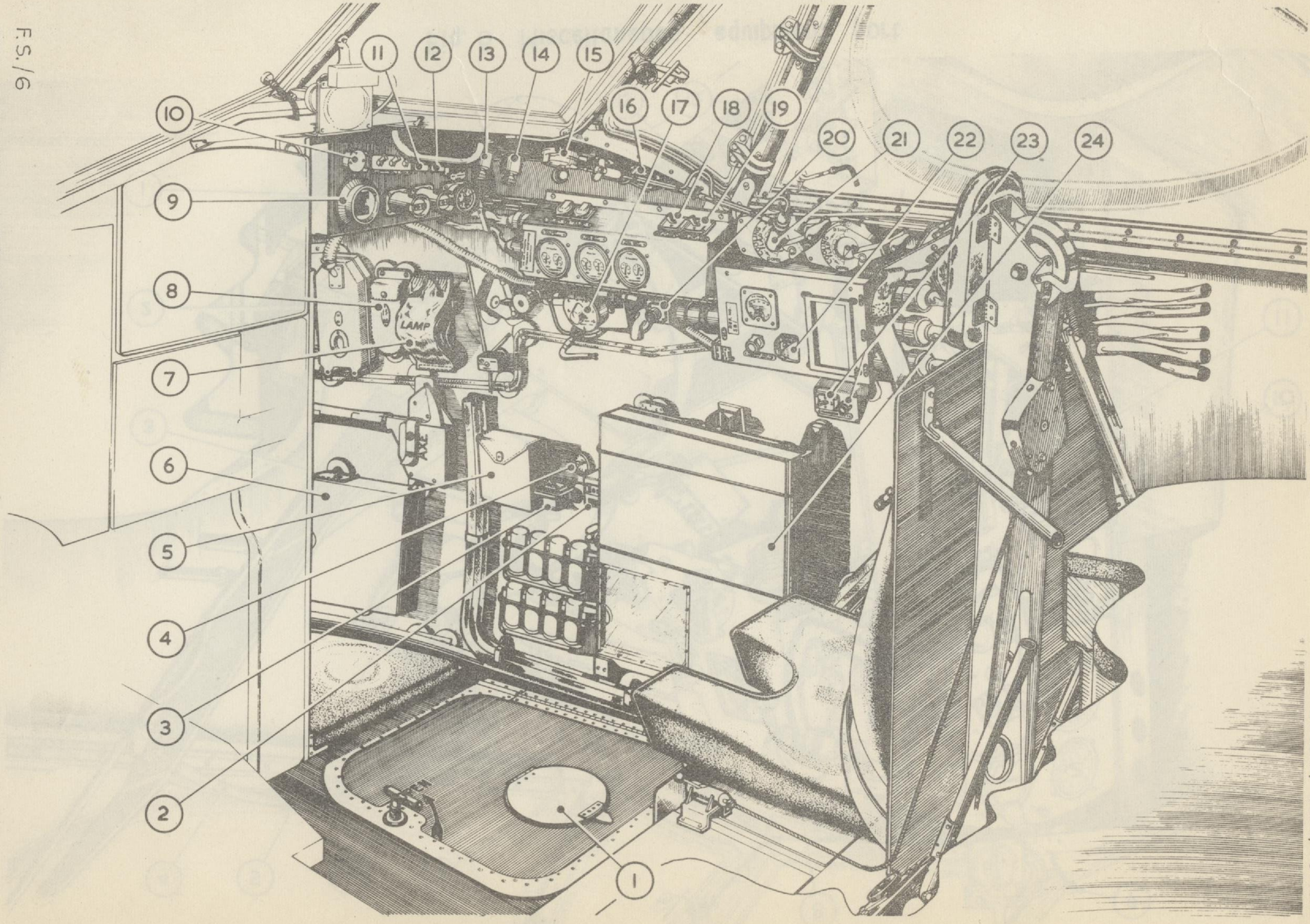

Fig. 5 Operational equipment, starboard

RESTRICTED

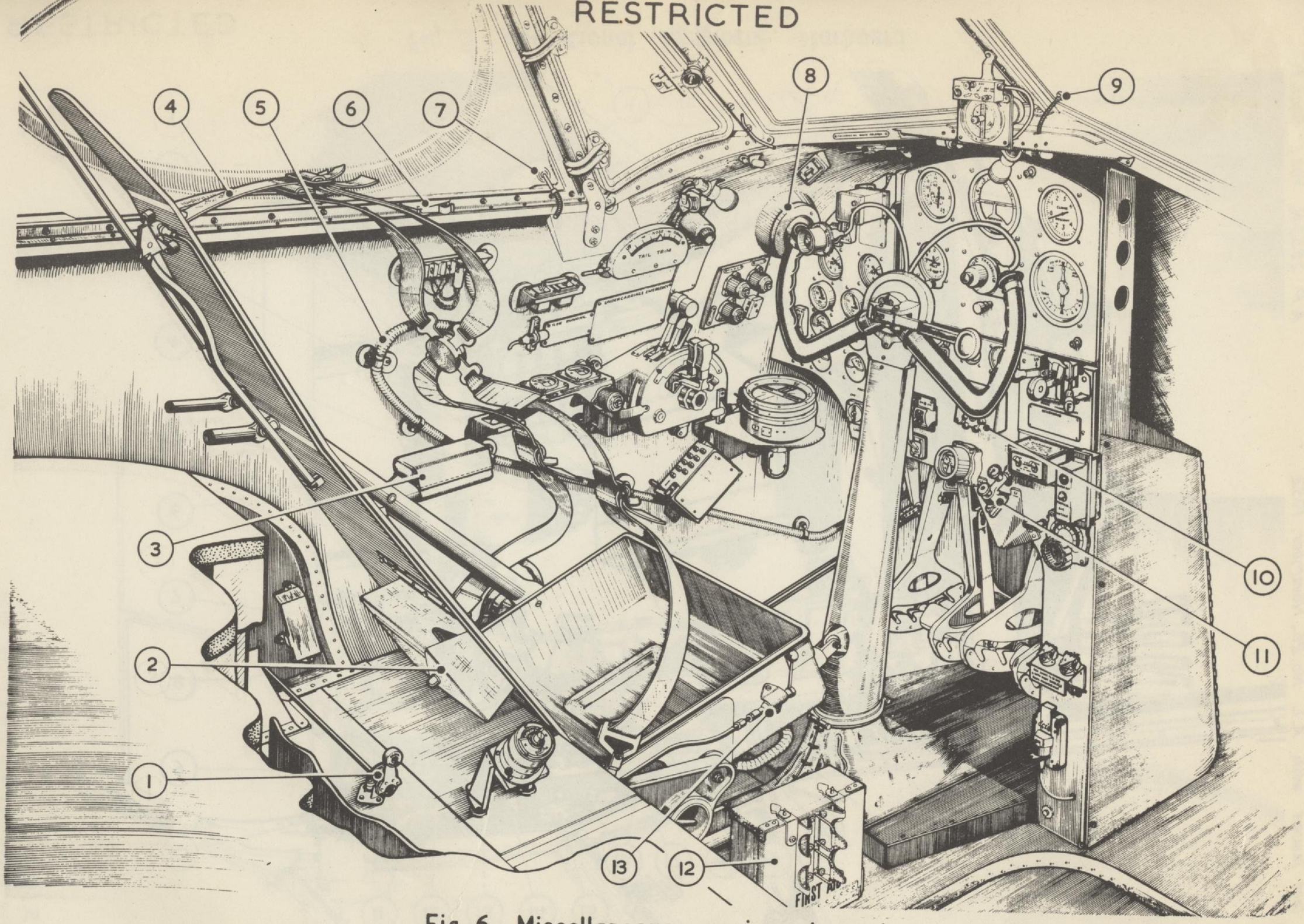

Fig. 6 Miscellaneous equipment, port

KEY TO FIG. 6 (MISCELLANEOUS EQUIPMENT, PORT)

1 COCKPIT HEAT CONTROL
Pull forward to increase hot air supply

2 STOWAGE FOR WIND FINDING ATTACHMENT (Mod. 1123)

3 FOLDING SEAT ARM

4 PILOT'S HARNESS

5 PILOT'S OXYGEN HOSE

6 CATCH FOR DIRECT VISION PANEL ; OPEN POSITION

7 DRY AIR CONNECTION TO CANOPY

8 COLD AIR LOUVRE
Turn louvre down to reduce air supply

9 DRY AIR CONNECTION TO WINDSCREEN

10 OXYGEN REGULATOR

11 WINDSCREEN DE-ICING PUMP AND REGULATOR

12 FIRST-AID STOWAGE

13 HARNESS RELEASE LEVER

Note.—The following items of equipment are not shown in the illustration :—

(a) HYDRAULIC HAND PUMP

(Mounted on the cockpit floor in rear of the first-aid stowage)

(b) UNDERCARRIAGE EMERGENCY LOWERING SELECTOR LEVER

(Mounted under a rubber cover on the front face of bulkhead No. 2, to starboard of the hand pump)

KEY TO FIG. 7 (MISCELLANEOUS EQUIPMENT, STARBOARD)

1 INNER ENTRANCE AND EXIT DOOR

2 STOWAGE FOR SIGNAL-PISTOL CARTRIDGES

3 CLIP FOR ENTRANCE DOOR ; OPEN POSITION

4 BRACKET SUPPORT FOR CHART BOARD STEADY TUBE SPIGOT

5 MASTER VALVE FOR OXYGEN SUPPLY

6 DRY AIR CONNECTION TO WINDSCREEN

7 HANDGRIP FOR ASSISTING CREW TO ENTER COCKPIT

8 CLOCK

9 DRY AIR CONNECTION TO CANOPY

10 NAVIGATOR'S HARNESS

11 NAVIGATOR'S OXYGEN ECONOMISER

12 UNDERCARRIAGE WARNING HORN

13 NAVIGATOR'S HARNESS RELEASE GEAR AND MOUNTING (Mod. 1179)

14 NAVIGATOR'S OXYGEN HOSE

15 NAVIGATOR'S SEAT CUSHION

16 NAVIGATOR'S PARACHUTE—IN STOWAGE

Note.—The hydraulic hand pump handle (not shown in illustration) is stowed in rear of the parachute stowage

17 HOT AIR PIPE TO BOMB AIMER'S WINDOW

Note.—The following items are not shown in the illustration :—

(a) BOMB BAY AND BOMB AIMER'S WINDOW HEAT CONTROL LEVER

Pull forward to increase heating

(Mounted on navigator's floor on right-hand side of seat)

(b) FIRE EXTINGUISHER

(Mounted on navigator's floor on left-hand side of seat—pre-Mod. 1619 and Mod. 1627)

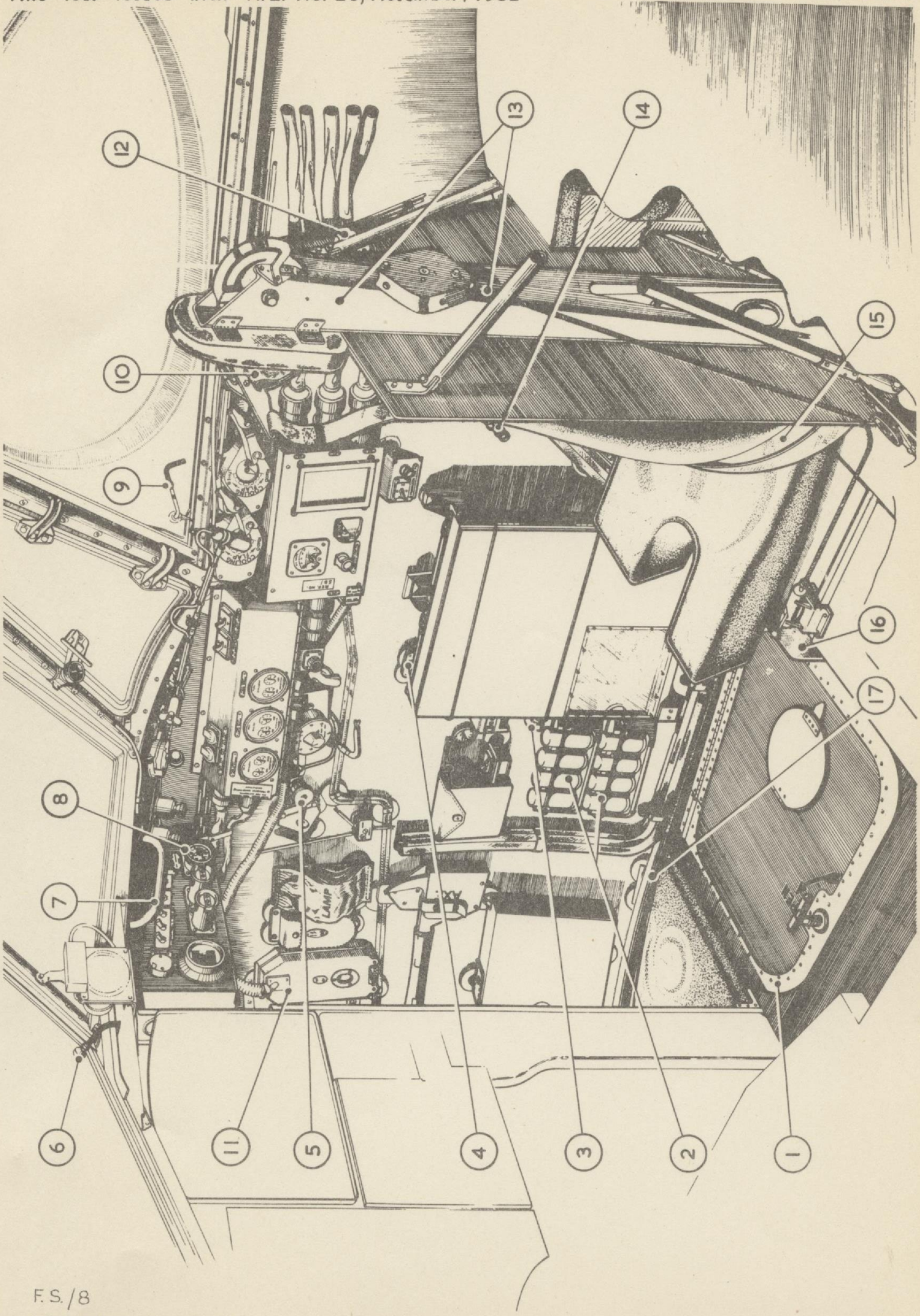

Fig. 7 Miscellaneous equipment, starboard

RESTRICTED

7876 68203 1/53 450 C. B. & S. LTD. GP.55

This leaf issued in reprint
December, 1947

SECTION

2

EMERGENCY CONTROLS, EQUIPMENT AND EXITS

123 M/C M45854 2/48 200 C.B.& S.Ltd. Gp.30

Section 2

EMERGENCY CONTROLS, EQUIPMENT AND EXITS

LIST OF CONTENTS

Para.

Introduction 1

EMERGENCY CONTROLS

Fuel system

Fuel cocks 2

Wing drop tanks 3

Hydraulic system

Undercarriage emergency lowering 4

Bomb jettisoning 5

Para.

EMERGENCY EQUIPMENT

Fire extinguishers

Engines 6

Hand extinguishers 7

Distress switch 8

Signal pistol 9

First-aid outfit 10

Crash axe 11

Dinghy 12

EMERGENCY EXITS

Parachute exit 13

Crash exit 14

ILLUSTRATION

Fig.

Emergency controls, equipment and exits 1

Introduction

1. The emergency controls associated with the main systems are fully covered in other Sections of this volume. For supplementary information, reference should be made to the Emergency Drills given in the Pilot's Notes (A.P.2653N-P.N.).

EMERGENCY CONTROLS

FUEL SYSTEM

Fuel cocks

2. To isolate the fuel supply to either engine, turn OFF the appropriate cock situated to port of the navigator's seat.

Wing drop tanks

3. The drop tanks (if fitted) should only be jettisoned in the case of operational necessity. They are released by a shielded push-switch, marked WING TANK—JETTISON, situated on the port wall of the cockpit.

HYDRAULIC SYSTEM

Undercarriage emergency lowering

4. On aircraft pre Mod. 1443 the emergency lowering of the undercarriage is effected through a separate system of pipe lines. To operate the emergency system, set the undercarriage selector lever NEUTRAL, push down the emergency selector valve and operate the hand pump. The emergency valve lever is fitted on the front face of the bulkhead to starboard of the pilot's seat and has a rubber cap which must be removed before the lever can be pressed down. On aircraft incorporating Mod. 1443 the emergency lowering of the undercarriage is effected by setting the main selector lever at DOWN, pushing down the emergency selector lever and operating the hand pump. This will also operate the tail wheel unit. Flaps and bomb doors can also be lowered by operating the hand pump, but the emergency selector must be returned to its normal position before selecting the service required on the main selector levers. No separate emergency system of pipe lines is incorporated.

Note . . .
On aircraft pre Mod. 1443 *neither the tail wheel nor the flaps can be lowered by the emergency system.*

Bomb jettisoning

5. To jettison the bombs or equivalent stores, set the bomb door selector lever DOWN and check by the indicator light that the doors are open. If a 4,000 lb. bomb is carried, pull the lever labelled MECHANICAL BOMB RELEASE, which is held by a safety strap on the cockpit port coaming. For any other bomb or store loading, pull the T-shaped handle labelled BOMB JETTISON on the instrument panel pedestal, adjacent to the aileron trim tab control.

EMERGENCY EQUIPMENT

FIRE EXTINGUISHERS

Engines

6. The engine fire-extinguishing system is operated when the aircraft is airborne and the fire warning has functioned, by pressing the appropriate feathering push switch ; this discharges two fire extinguisher bottles into the air-intake and around the engine. Push switches, marked ENGINE—PORT—STARBOARD on junction box B, are for use only if fire occurs on the ground. In the event of a crash landing *all* extinguisher bottles are automatically discharged.

Hand extinguishers

7. Two hand extinguishers are fitted, one in the bomb aimer's compartment and the other to port of the navigator's seat cushion. The latter extinguisher is not fitted on aircraft incorporating Mod. 1619 and 1627.

Distress switch

8. The R.3121 distress switch is fitted on the port wall of the cockpit, aft of the air-intake temperature gauges.

Signal pistol

9. A signal pistol is mounted on the centre of the cockpit canopy and the signal cartridges are stowed in racks adjacent to the chart board.

First-aid outfit

10. This is stowed in a box under the pilot's seat.

Crash axe

11. The crash axe is stowed on the starboard wall of the bomb aimer's compartment.

Dinghy

12. An inflatable dinghy is stowed above the wing centre section in a container secured to the fuselage and covered on the top. It is inflated automatically by two immersion switches, or manually by pulling a cable in the canopy roof behind the pilot's head.

EMERGENCY EXITS

Parachute exit

13. The main entrance is used as an EMERGENCY exit for the navigator and pilot. To jettison the outer door, the inner door must be opened and the door handle locked in the clip on the fuselage side, and then the pedal on the inboard side of the hatch must be pressed sharply. This withdraws a pin which severs connection between the hatch and its hinges ; the hinges swing clear of the opening as the door is jettisoned. To facilitate crew movement, the navigator's seat is folded upwards.

Crash exit

14. The canopy roof panel is released by pulling down the yellow lever on the forward edge, and pushing the panel out. A small circular " drive-in " plate is fitted on the emergency panel to enable the release lever to be operated from the outside.

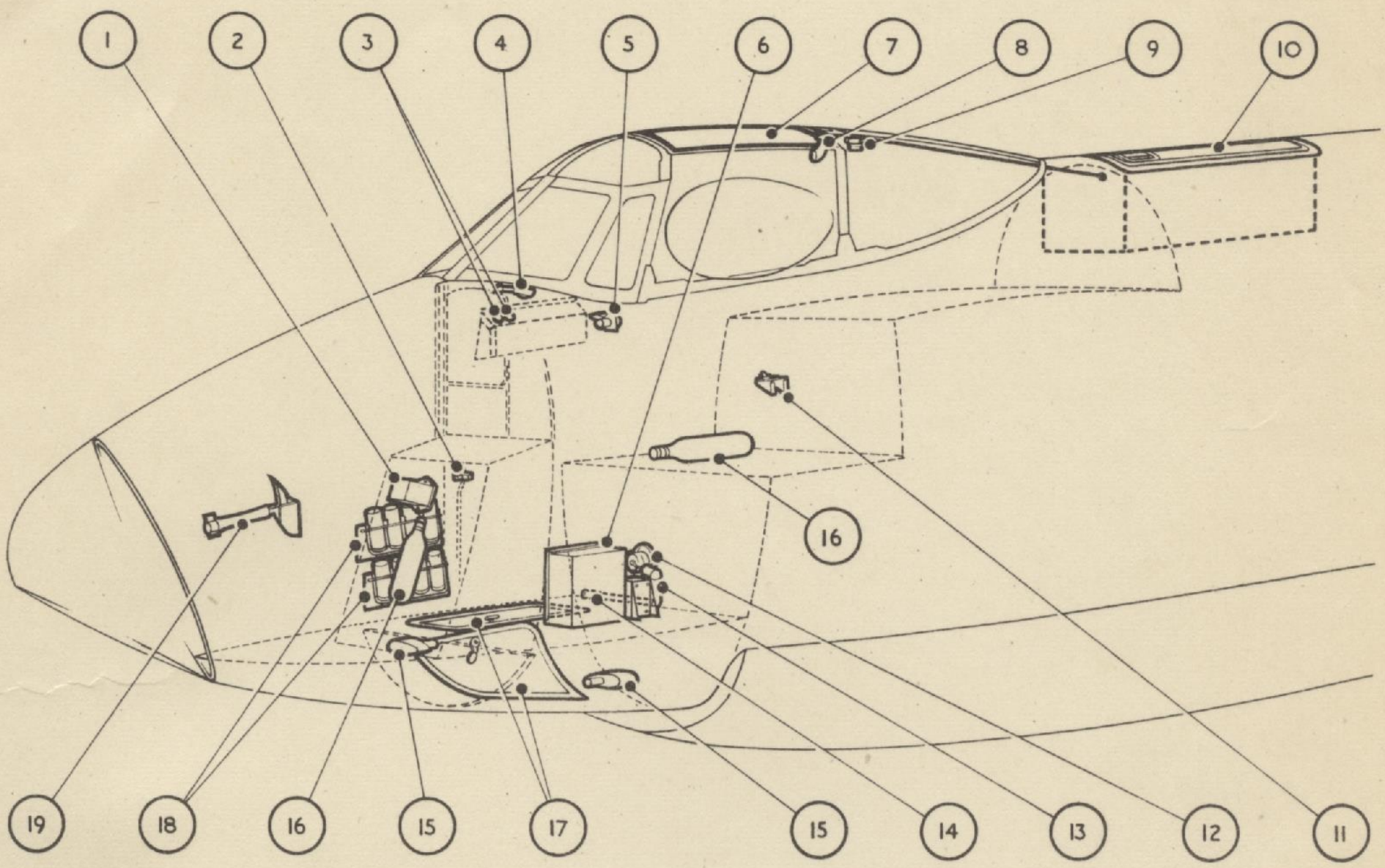

1 CRASH SWITCH—FORWARD SIDE OF RUDDER PEDAL STRUCTURE
2 BOMB JETTISONING TOGGLE—OTHER BOMBS, ON INSTRUMENT PANEL
3 FIRE EXTINGUISHER PUSH SWITCHES—JUNCTION BOX B
4 BOMB JETTISONING LEVER 4,000 LB—UNDER COAMING PORT WALL OF COCKPIT
5 DROP TANK JETTISON SWITCH—PORT WALL OF COCKPIT
6 FIRST-AID OUTFIT—UNDER PILOT'S SEAT
7 EMERGENCY EXIT—IN CANOPY ROOF
8 SIGNAL PISTOL—IN CANOPY ROOF
9 DINGHY MANUAL RELEASE—IN CANOPY ROOF
10 DINGHY—IN STOWAGE
11 DISTRESS SWITCH—PORT WALL OF COCKPIT
12 U/C EMERGENCY LOWERING SELECTOR LEVER—UNDER COVER, ON FORWARD FACE OF BULKHEAD No. 2
13 HYDRAULIC HAND PUMP—UNDER PILOT'S SEAT
14 HYDRAULIC HAND PUMP HANDLE—IN REAR OF NAVIGATOR'S PARACHUTE STOWAGE
15 IMMERSION SWITCHES—UNDER COCKPIT FLOOR FORWARD OF BULKHEAD No. 2
16 HAND FIRE EXTINGUISHERS—ON NAVIGATOR'S FLOOR AND FORWARD SIDE OF RUDDER PEDAL STRUCTURE
17 PARACHUTE EXIT—NORMAL ENTRY DOOR
18 CARTRIDGE STOWAGE—ST'B'D WALL OF COCKPIT
19 CRASH AXE—ST'B'D WALL OF COCKPIT IN NOSE COMPARTMENT

FIG. 1 EMERGENCY CONTROLS, EQUIPMENT AND EXITS

G1185 M22680 7/49 550 C.B.& S.LTD. GP55.

This leaf issued in reprint
December, 1947

SECTION

3

CONTROLS AND EQUIPMENT AT CREW STATIONS

123 M/C M45854 2/48 200 C.B.& S.Ltd. Gp.30

Section 3

This Section supersedes that issued with A.L. No. 14

CONTROLS AND EQUIPMENT AT CREW STATIONS

LIST OF CONTENTS

	Para.
Introduction	1
GENERAL EQUIPMENT	
Armour	2
Heating	
Cockpit	3
Bomb bay	4
Intercommunication	5
Oxygen	6
De-icing	7
NAVIGATIONAL AND OPERATIONAL EQUIPMENT	
Chart board	8
D.R. compass	9
Drift sight	10
Air position indicator	11
Wind finding attachment	12
Identification, navigation and resin lights	13
Transmitter, Type F	14
Bomb sights	
T.I. bomb sight	15
Mk. 3 bomb sight	16
Vacuum control cock	17
Bomb control and release	
Bomb selection and fuzing	18
Bomb release	19
Cameras	20
Multi-flash discharger	21
Photo-flash	22
Radio	23
Target towing equipment	
Target controls	24

LIST OF ILLUSTRATIONS

	Fig.
Target control panel	1
Equipment in bomb aimer's compartment	2
Equipment in rear of crew stations (unconverted aircraft)	3
Equipment in rear of crew stations (converted aircraft)	4

Introduction

1. This Section serves as a guide to the location of the controls, equipment and instruments generally operated by the navigator/bomb-aimer or target operator, and gives the method of operating the controls wherever this is not obvious. The cockpit illustrations are given in Sect. 1. Reference should be made to Sect. 6, for further details of the electrical and radio installation.

GENERAL EQUIPMENT

Armour

2. Armour plating is fitted to the pilot's and navigator's seat backs and the face of bulkhead No. 2.

HEATING

Cockpit

3. Cockpit heating is obtained from the inner or heater section of the port engine radiator. A control lever, situated aft of the pilot's seat, operates a shutter in the heater duct and diverts warmed air through a duct into the cockpit. Moving the lever forward increases the supply of hot air; a wing nut will clamp the lever in any position. Cold air is supplied by an adjustable louvre mounted on the port wall of the cockpit.

Bomb bay

4. The inner section of the starboard engine supplies heating for the bomb bay, and for de-misting the bomb aimer's observation window. The control lever on the starboard side of the navigator's seat operates in the same way as that for the cockpit heating.

Intercommunication

5. Microphone and telephone sockets are mounted on each side of the cockpit for the pilot and navigator with an additional socket in the bomb aimer's compartment. On aircraft incorporating Mod. 1125, a switch, labelled VHF-VHF and I/C, is fitted on the starboard side of the fuselage near the power supply switch panel.

Oxygen

6. A high pressure valve, located under junction box B, controls the supply of oxygen from six interconnected bottles to a Mk. 11B regulator mounted on the centre instrument panel. The pilot's economiser is mounted forward of the instrument panel and that for the navigator aft of his seat armour. The flexible oxgyen pipe from the navigator's economiser is sufficiently long to serve for the normal and bomb-aimer's stations.

De-icing

7. The de-icing pump and regulator for windscreen de-icing is fitted below the centre instrument panel and the bomb aimer's observation window de-icing pump is mounted on the starboard side of the forward compartment.

NAVIGATIONAL AND OPERATIONAL EQUIPMENT

Chart board

8. On aircraft incorporating Mod. 1124, the chart board is stowed on the fuselage side to the right and forward of the navigator's seat. To use the board, unclip the top end and lift the board from the stowage blocks, raising it to a horizontal position above knee height, and at the same time turn the board through 90 deg., in an anti-clockwise direction. The steady-tube spigot should then be inserted in its supporting bracket at the upper forward stowage bracket. When mounted, the front end of the board is supported by the steady-tube and the rear end on the navigator's knees. The chart board, on aircraft pre Mod. 1124, is fitted in a similar location, folded up against the fuselage side. The board is opened by sliding the bottom end up through the runners and attaching the support tube to the centre edge of the seat.

D.R. compass

9. The D.R. compass control panel is mounted below the hydraulic selector levers, the variation setting corrector on the shelf aft of the pilot's seat, and the indicator heading is fitted over the compass repeater.

Drift sight

10. The drift sight is mounted on the inner entrance door with a hinged flap which must be raised to use the sight.

Air position indicator

11. The A.P.I. unit (Mod. 1122), mounted on the wing decking in rear of the pilot's seat, is set to face the navigator.

Wind finding attachment

12. On aircraft incorporating Mod. 1123 a W.F.A. is fitted. A socket under junction box B is the connecting point for the W.F.A. electrical lead. When not in use, the attachment is stowed in a bag fitted on the rear of the pilot's seat armour.

Identification, navigation and resin lights

13. The identification light selector switch labelled RED - GREEN - AMBER is on the top of junction box B and adjacent is a three-way switch marked NAV - H.D. LAMP, OFF - ON - MORSE. The identification morsing key is mounted under the coaming above the forward end of junction box B. A three-way selector switch, labelled NAV - LTS—OFF - DIM - BRIGHT, is situated above the feathering switches, and the resin light switch is on the side of junction box B.

Transmitter, Type F

14. The flasher unit is mounted on bulkhead No. 2, below the navigator's seat, with the master switch and warning lamp on the fuselage wall below junction box B.

BOMB SIGHTS

T.I. bomb sight

15. The T.I.B. sighting head (Mod. 1114) is mounted on an adjustable bracket fitted

at the forward end of the bomb aimer's compartment. Above and to the left of the sighting head is the sight computor with a control switch mounted beneath it. On the forward side of the instrument panel pedestal is a two-way cock for controlling the compressed air from the exhaust side of the port engine vacuum system. An emergency computor stowage is fitted on the starboard side of the fuselage in line with the computor.

Mk. 3 bomb sight

16. On aircraft incorporating Mod. 1115 this sight is an alternative to the T.I.B. sight and its sighting head utilises the same mounting. A computor is mounted above the T.I.B. computor with a control panel situated in rear of the T.I. control switch. When the sight is not in use, the gyro vacuum hose is connected to a dummy stowage below the bomb aimer's window de-icing pump.

Vacuum control cock

17. When the Mk. 3 sight is in use, the control cock pointer should be in the central position, indicating NORMAL, BOTH PUMPS.

BOMB CONTROL AND RELEASE

Bomb selection and fuzing

18. The bomb master switch and the fuzing switches, on aircraft incorporating Mod. 1116, are on a switch panel above the bomb selector switch box, which is mounted on a panel in rear of the pilot's seat.

Bomb release

19. On aircraft incorporating Mod. 1116, a bomb release switch with the fuzing interlock unit is mounted at the base of the instrument panel pedestal, and immediately above are the alternative sockets for bombs and photo-flashes. When not in use, the firing lead is stowed in a pouch fitted on the side of the pedestal structure. The 4,000 lb. bomb is mechanically released by a lever which is located under the coaming on the port side forward of the pilot, and has a safety strap secured by a press-button fastener.

CAMERAS

20. The camera master switch (Mod. 1116) is fitted on the bomb-switch panel adjacent to the fuzing switches. The camera heater switch is located below junction box B. There are two mountings for the camera controls, one on the bomb distributor panel and the other on the fuselage wall below junction box B.

Multi-flash discharger

21. When this equipment is fitted (Mod. 1116, 1117 or 1358), the selector switch next to the camera master switch should be set at No. 7 and the firing switch lead plugged into the red socket.

Photo-flash

22. With this equipment the distributor switch is set to No. 7 and the firing switch lead is plugged into the black socket. The camera control, Type 35, No. 20, will be fitted on the wedge plate under junction box B.

RADIO

23. The following sub-paragraphs give the position of the controls and indicator units only ; for further information reference should be made to Sect. 6, Chap. 2.

(1) *T.R. 1430 (Mod. 1180).* A controller, Type 9, is mounted on the cockpit wall below the engine control box, with press-to-transmit switches fitted on the control column, under the right-hand direct vision window, and in the bomb aimer's compartment.

(2) *A.R.I. 5131 (Mod. 1033).* Control units, Types 89 and 90, are on a bracket mounted on the canopy frame over junction box C, with the distress switch on the cockpit wall in line with the pilot's seat. A morsing key is fitted on bulkhead No. 2 below the navigator's seat, with its change-over switch adjacent to the switch. Type 495A, below junction box B.

(3) *A.R.I. 5083 (Mod. 1120).* The master switch for this equipment, labelled Gee, is on the power supply switch panel, mounted on the cockpit wall to the right of the navigator's seat. Indicator, Type 62, is installed aft of the pilot's seat.

(4) *A.R.I. 5685 (Mod. 1120).* The master switch, marked G.H., is on the power supply panel. A control unit, Type 522, is mounted on the wing upper decking and is set to face the navigator. A computor release button is clipped to the cockpit wall beside the power supply panel. Both the indicator, Type 166, and control unit,

Type 426, are mounted in the swinging crate which, in the stowed position, occupies the entry to the bomb aimer's compartment. An indicator unit, Type 237, is mounted on top of the engine instrument panel.

(5) *A.R.I. 5610 (Mod. 1121).* A master switch, labelled REBECCA, is on the power supply panel. The control unit, Type 526, is fitted to the canopy structure above the navigator's seat, the indicator, Type 208, being located on the starboard instrument panel.

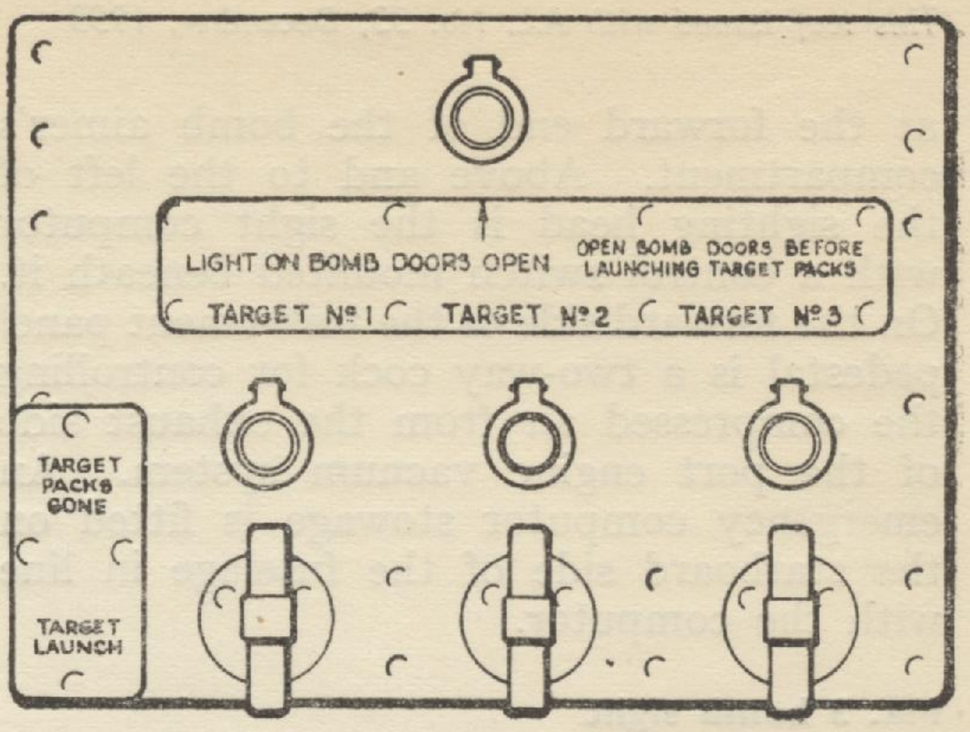

Fig. 1. Target control panel

TARGET TOWING EQUIPMENT

Target controls

24. Mounted on the port side of the cockpit aft of the pilot's seat, a target control panel (Mod. 1619 and 1627) accommodates three target launching handles. Three green indicator lamps, labelled TARGET PACKS GONE, are mounted above the launching handles, and a bomb door indicator lamp, green in colour, is mounted at the top of the panel. In addition, three target tow releases, labelled MANUAL TOW RELEASE, are mounted on the navigator's floor and are accessible to either member of the crew.

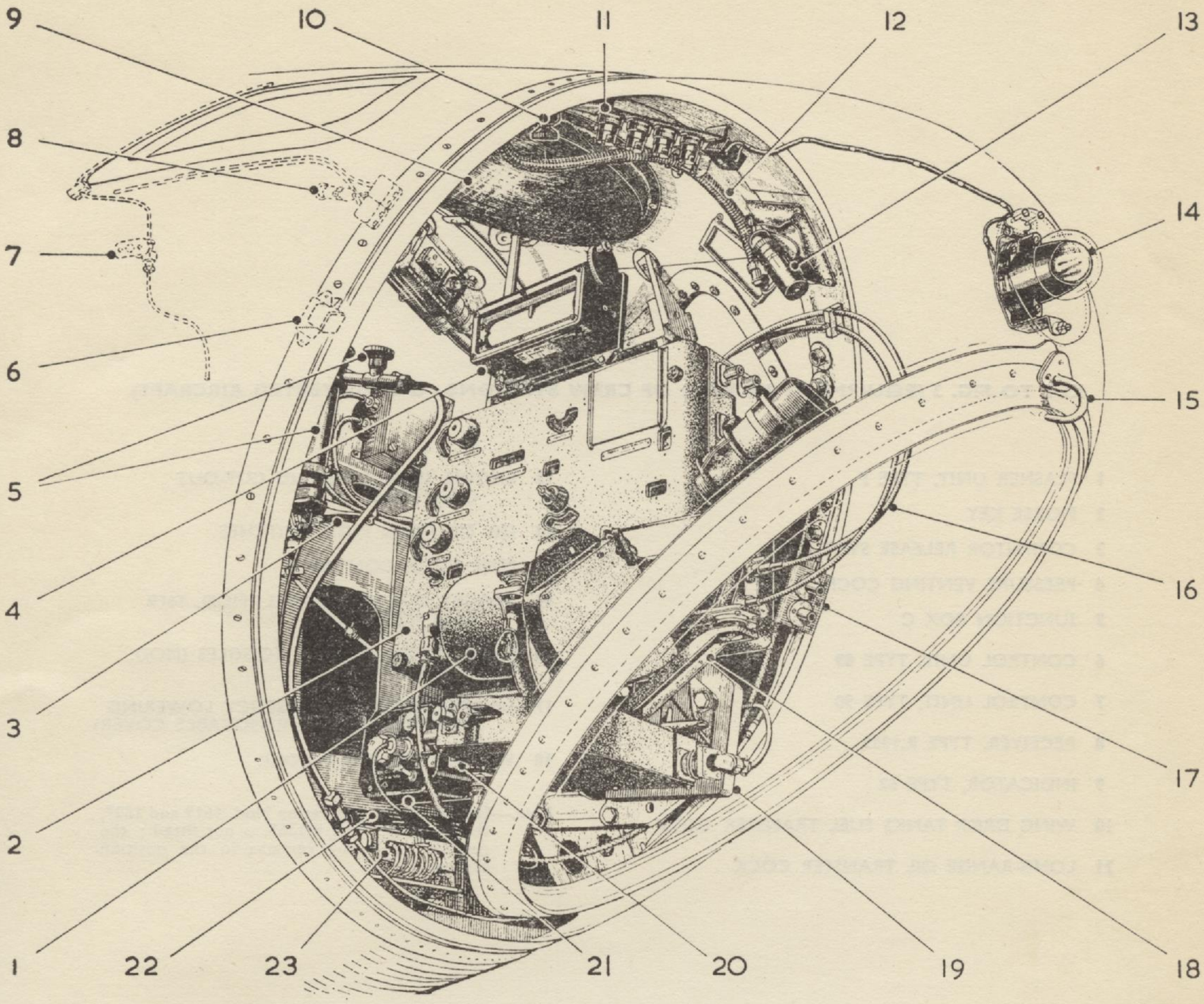

1 T.I.B. SIGHTING HEAD

2 T.I.B. SIGHT COMPUTOR

3 CONTROL COCK FOR T.I.B. SIGHT AIR SUPPLY

4 Mk. 3 SIGHT COMPUTOR

5 DE-ICING PUMP AND REGULATOR FOR BOMB AIMER'S WINDOW

6 TRANSMIT SWITCH

7 STATIC VENT FOR A.S.I.

8 FORWARD MIC-TEL SOCKET

9 BOMB AIMER'S HEAD CUSHION

10 DIMMER SWITCH FOR BOMB AIMER'S FLOODLAMP

11 SPARE LAMP HOLDERS

12 FLEXIBLE LEAD TO FLOODLAMP

13 BOMB AIMER'S FLOODLAMP

14 NAVIGATION HEAD LAMP

15 DE-ICING SPRAY PIPE

16 COMPUTOR FLEXIBLE DRIVES

17 STOWAGE FOR FLEXIBLE DRIVES

18 T.I.B. SIGHTING HEAD BRACKET

19 SIGHTING HEAD MOUNTING BRACKET

20 T.I.B. SIGHT CONTROL UNIT

21 CONTROL UNIT FOR Mk. 3 SIGHT

22 VACUUM HOSE FOR Mk. 3 SIGHT

23 BOMB DISTRIBUTOR PANEL (RE-POSITIONED MOD. 1423)

Note : Items 2 to 4, 7, 16 to 18, 20 and 21 are only fitted when Mod. 1114 and Mod. 1115 are embodied.

Fig. 2. Equipment in bomb aimer's compartment

KEY TO FIG. 3 (EQUIPMENT IN REAR OF CREW STATIONS—UNCONVERTED AIRCRAFT)

1 FLASHER UNIT, TYPE F

2 MORSE KEY

3 COMPUTOR RELEASE SWITCH

4 PRESSURE VENTING COCK

5 JUNCTION BOX C

6 CONTROL UNIT, TYPE 89

7 CONTROL UNIT, TYPE 90

8 RECEIVER, TYPE R.1355

9 INDICATOR, TYPE 62

10 WING DROP TANKS FUEL TRANSFER COCK

11 LONG-RANGE OIL TRANSFER COCK

12 ENGINE SLOW-RUNNING CUT-OUT CONTROLS

13 OIL DILUTION PUSH-SWITCHES

14 FUEL COCK CONTROLS

15 TARGET CONTROL PANEL (MOD. 1619 AND 1627)

16 TARGET TOW RELEASE TOGGLES (MOD. 1619 AND 1627)

17 UNDERCARRIAGE EMERGENCY LOWERING SELECTOR (UNDER REMOVABLE COVER)

18 VACUUM CONTROL COCK

Note.—On aircraft incorporating Mod. 1619 and 1627, the receiver, Type R.1355, is not fitted ; the receiver mounting remains in the position shown.

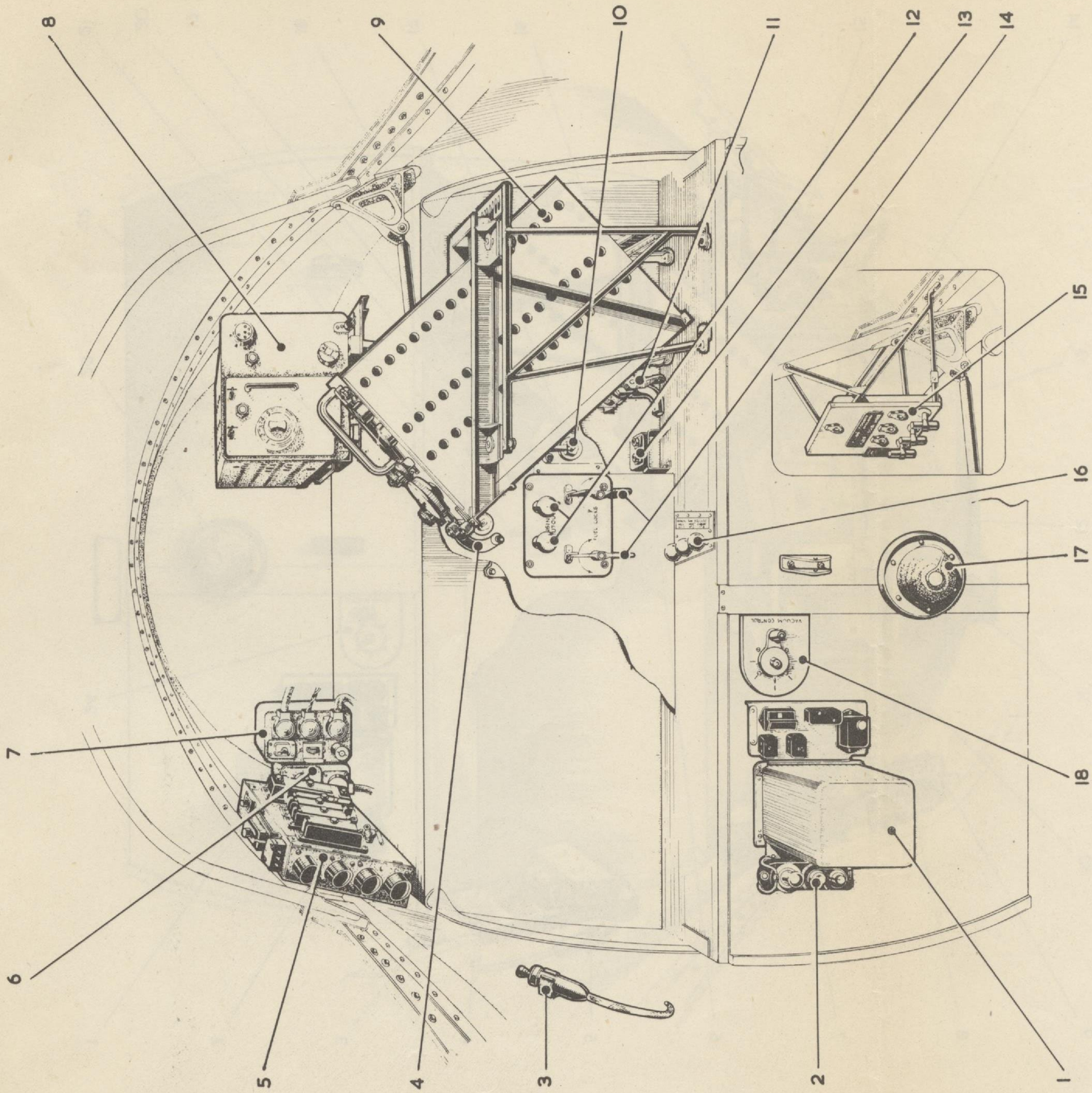

Fig. 3 Equipment in rear of crew stations (unconverted aircraft)

7273 61037 12/52 450 C.B.&S.LTD. GP.55

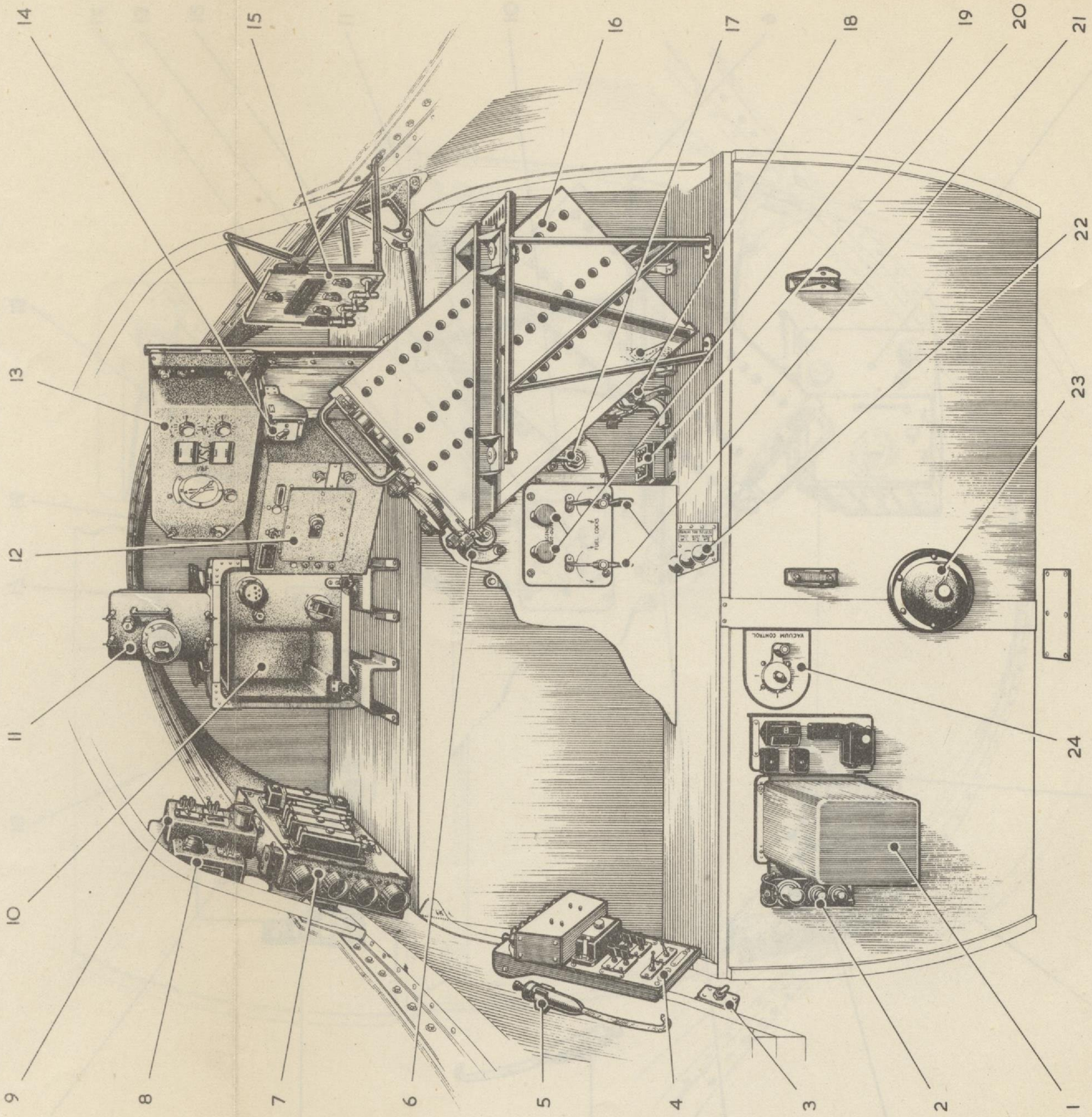

Fig. 4 Equipment in rear of crew stations (converted aircraft)

KEY TO FIG. 4 (EQUIPMENT IN REAR OF CREW STATIONS—CONVERTED AIRCRAFT)

1 FLASHER UNIT, TYPE F

2 MORSE KEY

3 V.H.F. AND INTERCOMMUNICATION SWITCH

4 POWER SUPPLY SWITCH PANEL

5 COMPUTOR RELEASE SWITCH

6 PRESSURE VENTING COCK

7 JUNCTION BOX C

8 CONTROL UNIT, TYPE 89

9 CONTROL UNIT, TYPE 90

10 RECEIVER, TYPE R.3582 (ALTERNATIVE TO RECEIVER, TYPE R.1355)

11 R.F. UNIT, TYPE 25

12 CONTROL UNIT, TYPE 522

13 AIR POSITION INDICATOR

14 A.P.I. TRANSMISSION SWITCH

15 TARGET CONTROL PANEL (MOD. 1619 AND 1627)

16 INDICATOR, TYPE 62 (ALTERNATIVE TO INDICATOR, TYPE 166)

17 WING DROP TANKS FUEL TRANSFER COCK

18 LONG-RANGE OIL TRANSFER COCK

19 ENGINE SLOW-RUNNING CUT-OUT CONTROLS

20 OIL DILUTION PUSH-SWITCHES

21 FUEL COCK CONTROLS

22 TARGET TOW RELEASE TOGGLES (MOD. 1619 AND 1627)

23 UNDERCARRIAGE EMERGENCY LOWERING SELECTOR (UNDER REMOVABLE COVER)

24 VACUUM CONTROL COCK

This leaf issued in reprint
December, 1947

SECTION

4

INSTRUCTIONS FOR GROUND PERSONNEL

CHAPTER 1 Loading and C.G. data

CHAPTER 2 Ground handling and preparation for flight

CHAPTER 3 General servicing

123 M/C M45854 2/48 200 C.B.& S.Ltd. Gp.30

Chapter 1

LOADING AND C.G. DATA

LIST OF CONTENTS

	Para.		Para.
Introduction	1	*Unconverted aircraft*	
Datum point	2	*Normal load*	10
Positive and negative moments	3	*Fuel consumption*	11
Method of calculating the C.G. position	4	*Target towing equipment (Mod. 1619 and 1627)*	12
C.G. range	5		
Typical service load	6	*Converted aircraft*	
Tare weight	7	*Normal load*	13
Weight restrictions	8	*Fuel consumption*	14
Typical examples	9	*Target towing equipment (Mod. 1619 and 627)*....	15

LIST OF ILLUSTRATIONS

	Fig.		Fig.
Loading and C.G. diagram—unconverted aircraft	1	*Loading and C.G. diagram—converted aircraft*	2

INTRODUCTION

1. This chapter deals with the effect of different loads upon the fore-and-aft positions of the centre of gravity (C.G., of both converted and unconverted aircraft. The C.G. position is determined with the aircraft in rigging position (fuselage datum line horizontal) and the alighting gear lowered, and is found by taking moments about a fixed point known as the C.G. datum point.

DATUM POINT

2. The position of the datum point is arbitrarily selected by the manufacturers, and, in this aircraft, is situated on the bottom edge of the front face of the front spar ply.

POSITIVE AND NEGATIVE MOMENTS

3. The distance of each load from the datum point is known as its " moment arm ". The loads are measured in pounds and the distance in feet. If a load is forward of the datum point its moment arm is taken as negative and therefore the resultant moment is negative. Conversely, the moment arms and moments of loads aft of the datum point are taken as positive.

METHOD OF CALCULATING THE C.G. POSITION

4. The C.G. position is determined by the following expression :—

$$\frac{(\text{Tare weight} \times \text{tare moment arms}) + (\text{weight of loads} \times \text{respective moment arms})}{\text{Tare weight} + \text{total weight of loads}} = \frac{\text{Tare moment} + \text{load moments}}{\text{total weight}}$$

C.G. RANGE

5. The approved limits of C.G. travel (*fig.* 1 *and* 2) with the alighting gear down are as follows :—

Forward limit	0·663 ft.	(7·96 in.)
Aft limit	1·390 ft.	(16·68 in.)

These limits are measured aft of the vertical C.G. datum line and parallel to the horizontal fuselage datum line. The C.G., which is aft of these limits when the undercarriage is up,

must always be kept within these limits, even when fuel, oil and other expendable military load is wholly or partly expended.

TYPICAL SERVICE LOAD

6. The C.G. positions of all the items to complete the typical service load (T.S.L.) are given in fig. 1 and 2. The items are listed in Tables 1 and 2 in Appendix A order.

TARE WEIGHT

7. The tare weight on converted and unconverted aircraft includes all the fixed fittings and equipment not listed in Tables 1 and 2. The weight and moment figures given in these Tables take account of modifications up to and including MOS. 1601, P.P.142,S.T.I. MOS. 115, S.T.I. MISC. 182 and A.I.MOS. 31A. Conversion modifications are listed in the Introduction, para. 20, and are not embodied on unconverted aircraft (*Table* 1). Should subsequent modifications affect the tare weight and moment, this chapter will be amended accordingly.

WEIGHT RESTRICTIONS

8. The following weight restrictions must be strictly adhered to :—

Max. weight—

for NORMAL FLYING—	
without drop tanks....	21,500 lb.
with 2 × 100 gall. drop tanks	23,000 lb.
under emergency conditions	
with 2 × 200 gall. drop tanks	25,500 lb.
for NORMAL LANDING	20,500 lb.
for AEROBATICS	19,100 lb.

When flying at an all-up weight in excess of 19,100 lb., the aircraft is restricted to NORMAL FLYING ONLY ; aerobatics may be performed when fuel and oil have been expended in sufficient quantity to reduce the weight to 19,100 lb., or less.

TYPICAL EXAMPLES

9. In the following paragraphs calculations are given for the C.G. position under possible conditions of loading during flight. All examples refer to a normal aircraft with 6 × 500 lb. bomb load and without desert equipment.

UNCONVERTED AIRCRAFT

Normal load

10.

	Weight (lb.)	Moment (lb. ft.)
Tare weight....	15,149	8,499
(Load—all items in Table 1)	8,067	21,075
Total	23,216	29,574

C.G. position $= \frac{29,574}{23,216}$

$= 1{\cdot}27$ ft. aft of datum.

Fuel consumption

11. The consumption of all fuel modifies the C.G. position as follows :—

	Weight (lb.)	Moment (lb. ft.)
Tare weight....	15,149	8,499
Load (all items in Table 1 except fuel and 30 gall. oil)	4,208	11,087
Total	19,357	19,586

C.G. position .... $= \frac{19,586}{19,357}$

$= 1{\cdot}01$ ft. aft of datum.

Target towing equipment (Mod. 1619 and 1627)

The addition of target towing gear modifies the weights and C.G. position as follows :—

		Weight (lb.)	Moment (lb. ft.)
12.	Tare weight	15,244	8,894
	Load (all items in Table 1 except items 1-5 inclusive)	5,930	13,809
	Target packs (3 off at 40 lb. each)	120	360
	Total	21,294	23,063

C.G. position .... $= \frac{23,063}{21,294}$

$= 1 \cdot 08$ ft. aft of datum.

CONVERTED AIRCRAFT

Normal load

		Weight (lb.)	Moment (lb. ft.)
13.	Tare weight	15,609	9,820
	Load (all items in Table 2)	8,266	21,213
		23,875	31,033

C.G. position .... $= \frac{31,033}{23,875}$

$= 1 \cdot 30$ ft. aft of datum

Fuel consumption

14. The consumption of all fuel modifies the C.G. position as follows :—

	Weight (lb.)	Moment (lb. ft.)
Tare weight	15,609	9,820
Load (all items in Table 2 except fuel and 30 gall. oil)	4,407	11,225
	20,016	21,045

C.G. position .... $= \frac{21,045}{20,016}$

$= 1 \cdot 00$ ft. aft of datum

Target towing equipment (Mod. 1619 and 1627)

15. The addition of target towing gear modifies the weights and C.G. position as follows :—

	Weight (lb.)	Moment (lb. ft.)
Tare weight	15,704	10,215
Load (all items in Table 2 except items 1-5 inclusive)	6,129	13,947
Target packs (3 off at 40 lb. each)	120	360
Total	21,953	24,522

C.G. position .... $= \frac{24,522}{21,953}$

$= 1 \cdot 11$ ft. aft of datum

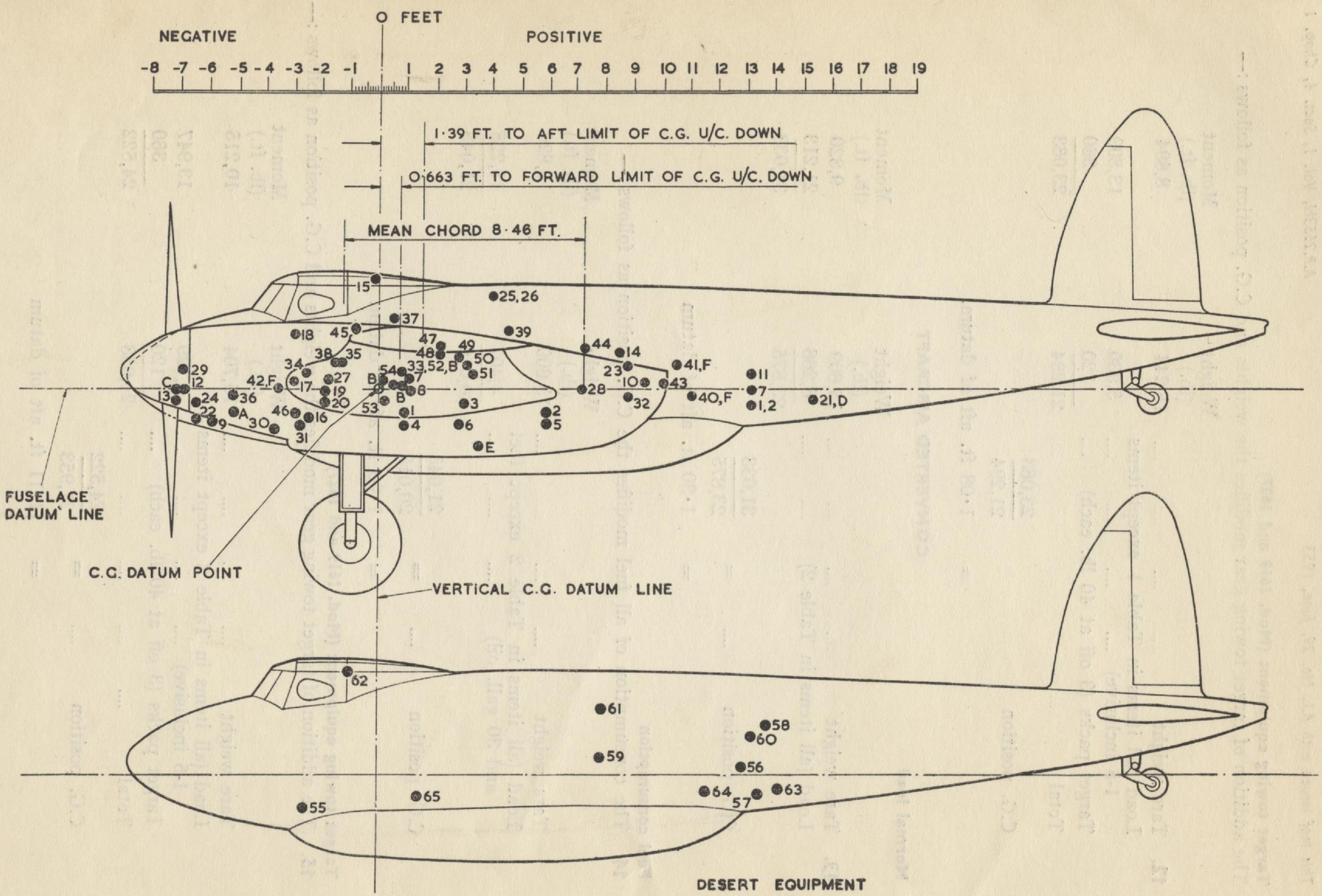

Fig. 1. Loading and C.G. diagram—unconverted aircraft

LOADING AND C.G. TABLE 1 AND KEY TO FIG. 1 (UNCONVERTED AIRCRAFT)

This leaf issued with A.L. No. 29, June, 1953

Item No.	REMOVABLE ITEMS OF MILITARY LOAD	6 x 500 lb. BOMBS			4,000 lb. BOMB and 2 x 50 gall. wing drop tanks			FERRYING		
		Weight (lb.)	Arm (ft.)	Moment (lb. ft.)	Weight (lb.)	Arm (ft.)	Moment (lb. ft.)	Weight (lb.)	Arm (ft.)	Moment (lb. ft.)
	BOMB GEAR									
1	Fuselage—250/500 lb. bomb carriers—2, forward	36·5	0·895	33	—	—	—	36·5	13·2	482
2	Fuselage—250/500 lb. bomb carriers—2, rear	36·5	5·93	216	—	—	—	36·5	13·2	482
3	Fuselage—250/500 lb. bomb crates	64·0	3·0	192	—	—	—	64·0	3·0	192
4	Fuselage—500 lb. G.P. S.A.P. or M.C. bombs—2, forward	1,000·0	0·895	895	—	—	—	—	—	
5	Fuselage—500 lb. G.P. S.A.P. or M.C. bombs—2, rear	1,000·0	5·93	5,930	—	—	—	—	—	—
6	Fuselage—4,000 lb. bomb	—	—	—	4,000	2·8	11,200	—	—	—
7	Wing—250/500 lb. bomb carriers and fairings, 2	55·0	1·12	62	—	—	—	55·0	13·2	725
8	Wing—500 lb. G.P. or M.C. bombs—2	1,000·0	1·12	1,120	—	—	—	—	—	—
9	Automatic bomb distributor, 16 point, Type 6	6·5	—5·9	—38	6·5	—5·9	—38	6·5	—5·9	—38
10	500 lb. bomb loading winch complete	21·0	9·4	197	21·0	9·4	197	21·0	9·4	197
11	4,000 lb. bomb winch handles—2	—	—	—	—	—	—	14·8	13·2	195
12	Bomb sight, Mk. 14	16·5	—6·9	—114	16·5	—6·9	—114	16·5	—6·9	—114
13	Universal mounting bracket	0·9	—7·1	—6	0·9	—7·1	—6	0·9	—7·1	—6
14	Computor, starboard installation	67·4	8·65	583	67·4	8·65	583	67·4	8·65	583
	GENERAL EQUIPMENT									
15	Signal pistol, Mk. 1	2·8	—0·1	0	2·8	—0·1	0	2·8	—0·1	0
16	Signal pistol cartridges—12	4·1	—2·5	—10	4·1	—2·5	—10	4·1	—2·5	—10
17	2 electric torches with batteries	3·8	—3·1	—12	3·8	—3·1	—12	3·8	—3·1	—12
18	Stop watch and clock	1·0	—3·0	—3	1·0	—3·0	—3	1·0	—3·0	—3
19	Navigational computor, Mk. 3D	1·5	—1·97	—3	1·5	—1·97	—3	1·5	—1·97	—3
20	Sundry navigational instruments	6·0	—1·97	—12	6·0	—1·97	—12	6·0	—1·97	—12
21	Camera, F.8 or F.52, with accessories	101·0	15·3	1,545	101·0	15·3	1,545	101·0	15·3	1,545
22	Camera, remote control, Type 35	4·2	—6·56	—27	4·2	—6·56	—27	4·2	—6·56	—27
23	Charge for 6 oxygen cylinders	14·0	8·88	124	14·0	8·88	124	14·0	8·88	124
24	Portable oxygen set, Mk. 1A	12·0	—6·51	—78	12·0	—6·51	—78	12·0	—6·51	—78
25	Dinghy, Type L, with accessories	19·0	4·0	76	19·0	4·0	76	19·0	4·0	76
26	Dinghy emergency pack	19·0	4·0	76	19·0	4·0	76	19·0	4·0	76
27	Cushions	9·9	—1·78	—18	9·9	—1·78	—18	9·9	—1·78	—18
28	Picketing eyes	3·0	7·2	22	3·0	7·2	22	3·0	7·2	22
29	4 one-pint vacuum flasks	8·2	—6·9	—56	8·2	—6·9	—56	8·2	—6·9	—56
30	Ladder, ingress and egress	6·9	—3·7	—26	6·9	—3·7	—26	6·9	—3·7	—26
31	First-aid outfit	2·7	—2·9	— 8	2·7	—2·9	— 8	2·7	—2·9	—8
32	Key for fuel tank	4·3	8·8	38	4·3	8·8	38	4·3	8·8	38
	FUEL TANKS									
33	2 x 50 gall. capacity wing drop tanks	—	—	—	75·0	0·85	64	75·0	0·85	64
	CREW									
34	Pilot, parachute, K-type dinghy and emergency oxygen set	219·0	—2·52	—552	219·0	—2·52	—552	219·0	—2·52	—552
35	Observer, parachute harness, K-type dinghy and emergency oxygen set	207·0	—1·19	—247	203·0	—1·19	—242	203·0	—1·19	—242
36	Observer's parachute pack	13·0	—5·17	—67	13·0	—5·17	—67	13·0	—5·17	—67
	RADIO									
37	Receiver R.1355	28·4	0·6	17	28·4	0·6	17	28·4	0·6	17
38	Indicator, Type 62, and mounting	40·8	—1·5	—61	40·8	—1·5	—61	40·8	—1·5	—61
39	Connector set	45·0	4·5	203	45·0	4·5	203	45·0	4·5	203
40	Transmitter receiver, T.R.1430	48·5	11·0	533	48·5	11·0	533	48·5	11·0	533
41	Power unit, Type 16	32·0	10·5	336	32·0	10·5	336	32·0	10·5	336
42	Electric controller, Type 9	2·6	—3·6	—9	2·6	—3·6	—9	2·6	—3·6	—9
43	Amplifier, A.1271	4·4	10·0	44	4·4	10·0	44	4·4	10·0	44
44	Receiver, R.3090	34·2	7·37	252	34·2	7·37	252	34·2	7·37	252
45	Control unit and detonator	2·7	—0·73	—2	2·7	—0·73	—2	2·7	—0·73	—2
46	Transmitter, T.3180	2·6	—3·0	—8	2·6	—3·0	—8	2·6	—3·0	—8
	TOTAL WEIGHTS AND MOMENTS REMOVABLE ITEMS OF MILITARY LOAD	4,208		11,137	5,087		13,958	1,294		4,834
	FUEL (100 OCTANE AT 7·2 LB. PER GALL. AND OIL AT 9 LB. PER GALL.)									
47	Outboard wing fuel—48 gall.	346·0	2·13	737	346·0	2·13	737	346·0	2·13	737
48	Outboard wing fuel—68 gall.	490·0	2·14	1,048	490·0	2·14	1,048	490·0	2·14	1,048
49	Inboard wing fuel—131 gall.	944·0	2·79	2,633	944·0	2·79	2,633	944·0	2·79	2,633
50	Inboard wing fuel—156 gall.	1,122·0	2·99	3,360	1,122·0	2·99	3,360	1,122·0	2·99	3,360
51	Centre section fuel—93·5 gall.	673·0	3·19	2,147	673·0	3·19	2,147	673·0	3·19	2,147
52	2 x 50 gall. wing drop fuel	—	—	—	720·0	0·85	612	720·0	0·85	612
53	Oil—31½ gall.	284·0	0·22	63	284·0	0·22	63	284·0	0·22	63
54	Aircraft tare to Col. 10 of Appendix "A"	15,149	0·56 (6·72 in.)	8,499	15,149	0·56 (6·72 in.)	8,499	15,149	0·56 (6·72 in.)	8,499
	TOTAL ALL-UP WEIGHTS U/c DOWN	23,216	1·27 (15·24)	29,624	24,815	1·32 (15·84)	33,057	21,022	1·14 (13·68)	23,933
	RETRACT U/c			2,423			2,423			2,423
	U/c UP	23,216	1·42 (17·04)	33,047	24,815	1·42 (17·04)	35,480	21,022	1·25 (15·00)	26,356
	DESERT EQUIPMENT									
55	Personal allowance	50	—2·5	—125	50	—2·5	—125	50	—2·5	—125
56	Sundry desert gear	5	12·8	64	5	12·8	64	5	12·8	64
57	8 signalling strips	9	13·3	120	9	13·3	112	9	13·3	112
58	3 spiked pickets	13·5	13·7	184	13·5	13·7	184	13·5	13·7	184
59	2 water bottles and carriers	7·8	7·8	61	7·8	7·8	61	7·8	7·8	61
60	Emergency flying rations and containers	11·4	13·2	150	11·4	13·2	150	11·4	13·2	150
61	3 gall. drinking water	30	8	240	30	8	240	30	8	240
62	Sunblinds and fittings	4	—1	—4	4	—1	—4	4	—1	—4
63	Emergency tool kit and sandproof caps	8	14·2	114	8	14·2	114	8	14·2	114
64	Covers, cockpit and engine	20	11·6	232	20	11·6	232	20	11·6	232
65	Fixed desert gear	83·7	1·43	120	83·7	1·43	120	83·7	1·43	120
	TOTAL ALL-UP WEIGHTS WITH DESERT GEAR U/c DOWN	23,458	1·31 (15·72)	30,780	25,057	1·35 (16·20)	34,205	21,264	1·17 (14·04)	25,081
	RETRACT U/c			2,423			2,423			2,423
	U/c UP	23,458	1·42 (17·04)	33,203	25,061	1·45 (17·40)	36,628	21,264	1·29 (15·48)	27,504

Item	REMOVABLE ITEMS OF MILITARY LOAD NOT INCLUDED IN TYPICAL LOADINGS ABOVE	Weight (lb.)	Arm (ft.)	Moment (lb. ft.)
A	Observer moved forward to nose	203	—5·19	—1,050
B	2 x 500 lb. wing bombs may be replaced by :—			
	2 x 50 gall. capacity wing drop tanks	75	0·85	64
	OR			
	2 x 100 gall. capacity wing drop tanks	120	0·31	37
	OR			
	2 x 200 gall. capacity wing drop tanks	232	0·68	158
C	Bomb sight Mk. 14 (items 12-14) may be replaced by the low level bomb sight comprising :—			
	Sighting head and mounting bracket Computor Suppressor	27·5	—7·0	—192
D	1 F.8 or F.52 camera with accessories (21) may be replaced by :—			
	1 F.24 camera with accessories	49·0	15·3	750
E	Bombs and bomb carriers (items 1-6) inclusive can be replaced by banner target towing equipment (Mod. 1619 and 1627) with targets loaded	215	3·51	755
F	Transmitter-receiver, T.R.1430 (items 40-43), may be replaced by T.R.1143, comprising :—			
	Transmitter-receiver, T.R.1143	42	11	462
	Power unit, Type 16	26	10·5	273
	Electric controller, Type 3	2·8	—3·6	—10

LOADING AND C.G. TABLE 2 AND KEY TO FIG. 2 (CONVERTED AIRCRAFT)

Item No.	REMOVABLE ITEMS OF MILITARY LOAD	6 x 500 lb. BOMBS			4,000 lb. BOMB and 2 x 50 gall. wing drop tanks			FERRYING		
		Weight (lb.)	Arm (ft.)	Moment (lb. ft.)	Weight (lb.)	Arm (ft.)	Moment (lb. ft.)	Weight (lb.)	Arm (ft.)	Moment (lb. ft.)
	BOMB GEAR									
1	Fuselage—250/500 lb. bomb carriers—2, forward	36·5	0·895	33	—	—	—	36·5	13·2	482
2	Fuselage—250/500 lb. bomb carriers—2, rear	36·5	5·93	216	—	—	—	36·5	13·2	482
3	Fuselage—250/500 lb. crates	64·0	3·0	192	—	—	—	64·0	3·0	192
4	Fuselage—500 lb. G.P. S.A.P. or M.C. bombs—2, forward	1,000·0	0·895	895	—	—	—	—	—	—
5	Fuselage—500 lb. G.P. S.A.P. or M.C. bombs—2, rear	1,000·0	5·93	5,930	—	—	—	—	—	—
6	Fuselage—4,000 lb. bomb	—	—	—	4,000	2·8	11,200	—	—	—
7	Wing—250/500 lb. bomb carriers and fairings—2	55·0	1·12	62	—	—	—	55·0	13·2	725
8	Wing—500 lb. G.P. or M.C. bombs—2	1,000·0	1·12	1,120	—	—	—	—	—	—
9	Automatic bomb distributor, 32-way	11·0	—0·95	—10	11	—0·95	—10	11·0	—0·95	—10
10	500 lb. bomb loading winch complete	21·0	9·4	197	21	9·4	197	21·0	9·4	197
11	4,000 lb. bomb winch handles—2	—	—	—	—	—	—	14·8	13·2	195
12	Bomb sight, T.I.B.	18·0	—7·65	—138	18	—7·65	—138	18·0	—7·65	—138
13	Universal mounting bracket	0·9	—7·1	—6	0·9	—7·1	—6	0·9	—7·1	—6
14	Computor, T.I.B.	60·0	—7·23	—434	60	—72·3	—434	60	—7·23	—434
	GENERAL EQUIPMENT									
15	Signal pistol, Mk. I	2·8	—0·1	0	2·8	—0·1	0	2·8	—0·1	0
16	Signal pistol cartridges—12	4·1	—2·5	—10	4·1	—2·5	—10	4·1	—2·5	—10
17	2 electric torches with batteries	3·8	—3·1	—12	3·8	—3·1	—12	3·8	—3·1	—12
18	Stop watch and clock	1·0	—3·0	—3	1·0	—3·0	—3	1·0	—3·0	—3
19	Navigational computor, Mk. 3D	1·5	—1·97	—3	1·5	—1·97	—3	1·5	—1·97	—3
20	Air position indicator	26·0	0·5	13	26	0·5	13	26	0·5	13
21	Wind finding attachment	2·0	—1·2	—2	2	—1·2	—2	2	—1·2	—2
22	Sundry navigational instruments	6·0	—1·97	—12	6	—1·97	—12	6	—1·97	—12
23	Camera, F.24 or F.61, with accessories	49·0	15·3	750	49	15·3	750	49	15·3	750
24	Camera, remote control, Type 35	4·2	—6·56	—27	4·2	—6·56	—27	4·2	—6·56	—27
25	Charge for 6 oxygen cylinders	14·0	8·88	124	14·0	8·88	124	14·0	8·88	124
26	Portable oxygen set, Mk. 1A	12·0	—6·51	—78	12·0	—6·51	—78	12·0	—6·51	—78
27	Dinghy, Type L, with accessories	19·0	4·0	76	19·0	4·0	76	19·0	4·0	76
28	Dinghy emergency pack	19·0	4·0	76	19·0	4·0	76	19·0	4·0	76
29	Cushions	9·9	—1·78	—18	9·9	—1·78	—18	9·9	—1·78	—18
30	Picketing eyes	3·0	7·2	22	3·0	7·2	22	3·0	7·2	22
31	4 one-pint vacuum flasks	8·2	—6·9	—56	8·2	—6·9	—56	8·2	—6·9	—56
32	Ladder, ingress and egress	6·9	—3·7	—26	6·9	—3·7	—26	6·9	—3·7	—26
33	First-aid outfit	2·7	—2·9	—8	2·7	—2·9	—8	2·7	—2·9	—8
34	Key for fuel tank	4·3	8·8	38	4·3	8·8	38	4·3	8·8	38
	FUEL TANKS									
35	2 x 50 gall. capacity wing drop tanks	—	—	—	75·0	0·85	64	75·0	0·85	64
	CREW									
36	Pilot, parachute, K-type dinghy and emergency oxygen set	219·0	—2·52	—552	219·0	—2·52	—552	219·0	—2·52	—552
37	Observer, parachute harness, K-type dinghy and emergency set	207·0	—1·19	—247	203·0	—1·19	—242	203·0	—1·19	—242
38	Observer's parachute pack	13·0	—1·19	—15	13·0	—1·19	—15	13·0	—1·19	—15
	RADIO									
39	Transmitter-receiver T.R.1430	48·5	11·0	533	48·5	11·0	533	48·5	11·0	533
40	Power unit, Type 16	32·0	10·5	336	32·0	10·5	336	32·0	10·5	336
41	Electric controller, Type 9	2·6	—3·6	—9	2·6	—3·6	—9	2·6	—3·6	—9
42	Control unit, Type 3 or 5	20·0	8	160	20·0	8	160	20·0	8	160
43	Indicator unit, Type 166	29·5	—1	—30	29·5	—1	—30	29·5	—1	—30
44	Indicator unit, Type 237	1·0	—4·0	—4	1·0	—4	—4	1·0	—4	—4
45	Control unit, Type 426	18·0	—5·5	—108	18·0	—5·5	—108	18·0	—5·5	—108
46	Control unit, Type 522	12·0	1·75	24	12·0	1·75	24	12·0	1·75	24
47	Receiver, Type R.3582	34·0	2	68	34·0	2	68	34·0	2	68
48	R.F. unit, Type 25	7·5	2	15	7·5	2	15	7·5	2	15
49	Transmitter, Type T.1629	80·0	13	1,040	80·0	13	1,040	80·0	13	1,040
50	Strobe unit, Type 61	47·0	8	376	47·0	8	376	47·0	8	376
51	Drive unit, Type 114	22·0	5	110	22·0	5	110	22·0	5	110
52	Filter unit, Type 190	2·5	11	28	2·5	11	28	2·5	11	28
53	Receiver, Type R.1355	30·0	2	60	30·0	2	60	30·0	2	60
54	Control unit, Type 526	3·0	—4	—12	3·0	—4	—12	3·0	—4	—12
55	Transmitter-receiver, T.R.3624	36·0	9	324	36·0	9	324	36·0	9	324
56	Indicating unit, Type 208	3·0	—5	—15	3·0	—5	—15	3·0	—5	—15
57	Receiver, R.3121	34·2	7·37	252	34·2	7·37	252	34·2	7·37	252
58	Control unit and detonator	2·7	—0·73	—2	2·7	—0·73	—2	2·7	—0·73	—2
59	Transmitter, T.3180	2·6	—3·0	—8	2·6	—3·0	—8	2·6	—3·0	—8
	TOTAL WEIGHTS AND MOMENTS REMOVABLE ITEMS OF MILITARY LOAD	4,409·0		11,225	5,288		14,046	1,495		4,922
	FUEL (100 OCTANE AT 7·2 LB. PER GALL. AND OIL AT 9 LB. PER GALL.) TOTAL (SEE TABLE 1 AND KEY TO FIG. 1)	3,859·0	—	9,988	4,579	—	10,600	4,579	—	10,600
60	Aircraft tare to Col. 10 of Appendix "A"	15,609·0	0·629 (7·55 in.)	9,820	15,609	0·629 (7·55 in).	9,820	15,609	0·629 (7·55 in.)	9,820
	TOTAL ALL-UP WEIGHTS U/c DOWN	23,875·0	1·30 (15·6 in.)	31,033	25,478	1·35 (16·2 in.)	34,266	21,683	1·12 (13·44 in.)	23,637
	LESS DESERT GEAR RETRACT U/c			2,423			2,423			2,423
	U/c UP	23,875·0	1·40 (16·8 in.)	33,456	25,478	1·45 (17·4 in.)	36,689	21,683	1·23 (14·76 in.)	26,060
	DESERT EQUIPMENT TOTAL (SEE TABLE 1 AND KEY TO FIG. 1)	241·9	—	1,156	*Desert equipment not applicable*			241·9	—	1,156
	TOTAL ALL-UP WEIGHTS U/c DOWN	24,117·0	1·33 (15·96 in.)	32,189	—	—	—	21,925·0	1·16 (13·92 in.)	24,793
	WITH DESERT GEAR RETRACT U/c			2,423						2,423
	U/c UP	24,117·0	1·43 (17·16 in.)	34,612	—	—	—	21,925·0	1·27 (15·24 in.)	27,216

Item	REMOVABLE ITEMS OF MILITARY LOAD NOT INCLUDED IN TYPICAL LOADINGS ABOVE	Weight (lb.)	Arm (ft.)	Moment (lb. ft.)
A	Observer moved forward to nose	203	—5·19	—1,050
B	2 x 500 lb. wing bombs may be replaced by :—			
	2 x 50 gall. capacity wing drop tanks	75	0·85	64
	OR			
	2 x 100 gall. capacity wing drop tanks	120	0·31	37
	OR			
	2 x 200 gall. capacity wing drop tanks	232	0·68	158
C	Bombs and bomb carriers (items 1-5 inclusive) can be replaced by banner target towing equipment (Mod. 1619 and 1627) with targets loaded	215	3·51	755

37612 7378 7/53 450 C.B.&S.LTD. GP55

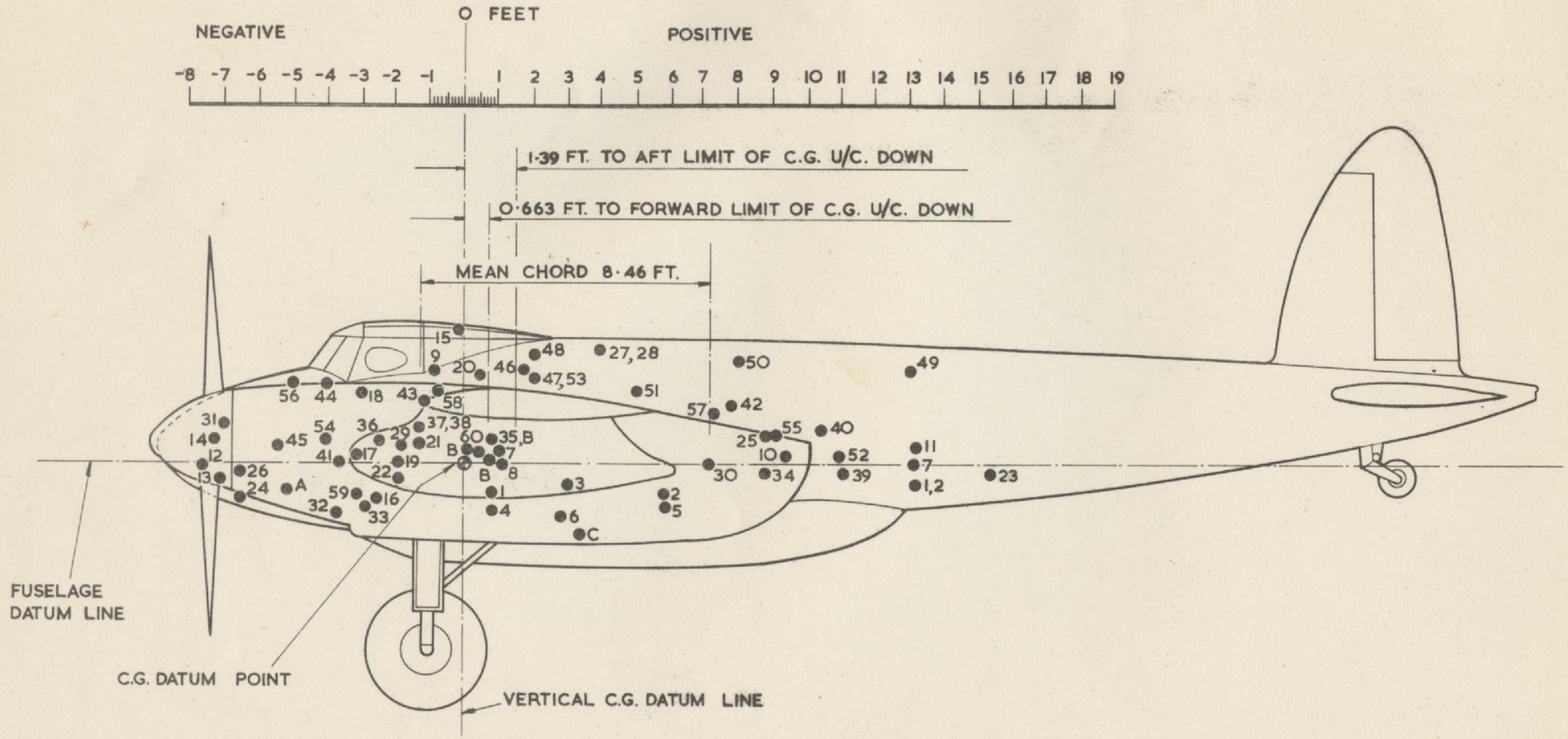

FIG. 2. LOADING AND C.G. DIAGRAM - CONVERTED AIRCRAFT

RESTRICTED

Chapter 2

GROUND HANDLING AND PREPARATION FOR FLIGHT

LIST OF CONTENTS

	Para.
Introduction	1

GROUND HANDLING

Towing	
Preliminary preparations	2
Forward towing by tractor	3
Backward towing	4
Picketing	5
Weatherproof covers	6
Jacking	
Main wheels	7
Tail wheel	8
Lifting a crashed aircraft	9

GENERAL PREPARATION FOR FLIGHT

Fuel system	
Re-fuelling	11
Draining	13
Draining water	14
Wing drop tank installation	15
Drop tanks flow test	17
Installation of long-range tanks	18
Oil system	
Filling	20
Draining	21
Installation of long-range oil tank	23
Oil dilution	24
Coolant system	
Draining	25
Filling	26
Intercooler system	
Filling and draining	27
De-icing system	28
Hydraulic system	29
Pneumatic system	
Charging	30
Draining	31
Oxygen system	32
Instrument-flying practice screens—amber	33
Canopy escape hatch	34
Dinghy	35
Dry air system	36
Camera installation	37
Multi-flash discharger installation	38
Bombs and pyrotechnics	39
Target towing equipment	
Stowage of targets	40

LIST OF ILLUSTRATIONS

	Fig.
Towing and picketing	1
Assembly of control locking clamps	2
Lifting jacks	3
Weatherproof covers	4
Salvage of aircraft	5
Wing drop tank installation	6
Drop tank release gear	7
Installation of No. 11 and 12 tanks	8
Installation of long-range oil tank	9
Oxygen system	10
De-icing system	11
Dinghy installation	12
Camera installation	13
Multi-flash discharger	14
Air drier	15
Target stowage	16

Introduction

1. Items of equipment and tools peculiar to the aircraft for handling and servicing are listed in Sect. 4, Chap. 3, Table 1 and 2.

GROUND HANDLING

TOWING

Preliminary preparations

2. Prior to towing, ensure that the entrance ladder is removed, the brakes are off, and the locking caps are on the undercarriage jacks. When the aircraft is being towed, a competent person should be in the cockpit to apply the brakes to prevent the tractor or towing cable being overrun.

Forward towing by tractor (*fig. 1*)

3. The aircraft is towed from two eyes, one on each inboard axle cap. The towing cable, which is described in A.P.2817A, Vol. 1, Sect. 9, should be used, and the cable (Stores Ref. 26BY/5007) interposed between the towing eyes and the cable shackles. This cable serves as a weak link in the towing system.

Backward towing

4. A towing arm (Stores Ref. 26BY/5006), is hooked by the fork-end on to spools fitted at each side of the tail wheel axle. The towing arm incorporates a shock-absorber spring and a safety shear pin. In the event of a pin shearing, use the pin (Stores Ref. 26BY/7307) for replacement, six of which are carried on the towing arm. Alternatively, a standard towing arm (Stores Ref. 4G/2792) can be used.

Note . . .

The aircraft must not be towed backwards if the tail plane has been removed.

PICKETING (*fig. 1*)

5. The picketing of the aircraft as illustrated is self-explanatory. Locking of the controls and control surfaces is illustrated in fig. 1 and 2.

WEATHERPROOF COVERS (*fig. 4*)

6. The method of fitting the engine, fuselage, radiator and other covers is shown in the illustration. Stowage for the covers is in the rear fuselage. Protective plugs (Stores Ref. 6A/2679) are provided for the static vents.

JACKING (*fig. 3*)

Main wheels

7. Two 10-ton hydraulic bipod jacks each comprising a jack body (Stores Ref. 4Q/2293), Mk. 2 trestle (Stores Ref. 4Q/2295), and a Mk. 18 adapter (Stores Ref. 4Q/2299) should be used when lifting the wheels clear of the ground. In addition the tail wheel should be chocked fore and aft. A jacking pin (Stores Ref. 26BY/5076), stowed on each jack when not in use, engages with the jack adapter and the picketing eye socket on the outboard side of the nacelle in turn. The Mk. 2 trestle has four legs but is used as a bipod (refer to A.P.2817A, *Vol.* 1, *Sect.* 5, *Chap.* 5, *para.* 3), the adjustable leg being outboard. Before attaching the adapter to the aircraft, ensure that there is $1\frac{1}{2}$ in. clearance between the jack and the wheel door ; the clearance, however, should be $2\frac{1}{2}$ in. if the tyre is flat.

Tail wheel

8. To raise the tail wheel clear of the ground, first chock the main wheels fore and aft, and then place a jacking former (Stores Ref. 26BY/5012) and a 4-ton hydraulic jack (Stores Ref. 4Q/1129) under the jacking point forward of the tail wheel.

Lifting a crashed aircraft (*fig. 5*)

9. The illustration shows the application of standard ground equipment for lifting a crashed aircraft. A block, Part No. Z.98257A (Stores Ref. 26BY/5030), is attached to the underside of the front spar on each side of the fuselage and two standard 8-ton double-acting jacks are placed beneath the blocks. Both jacks should be operated at the same rate until a height has been reached when the salvage trolley can be placed underneath the undercarriage structure. The tail can be raised by a 2-ton electric mobile crane with a sling (Stores Ref. 26BY/5015) around the fuselage or by man power, when the forward portion has been raised.

10. A crashed aircraft may also be lifted and removed by two Tracjacs (Stores Ref. 4Q/2332) placed under the wings between the nacelles and fuselage. A 3-ton tracked, salvage trolley, Type B (Stores Ref. 4G/3735), should be used to support the tail of the aircraft if the tail wheel is damaged, the tail being lifted by means of the lifting sling (Stores Ref. 26BY/5015). When

positioning the Tracjacs, adjust the pads so that they are under the wing spars. Tow the aircraft forward, if possible, using a bridle *attached to the propeller bosses*. If it is necessary to tow backwards, disconnect the Tracjac tow-bars from the side frame towing lugs and attach them to the rear ends of the lifting beams, then *attach the towing cables to the tow-bars*.

Note . . .
When the aircraft is being towed on Tracjacs down an incline, a second tractor must be used to serve as a brake.

GENERAL PREPARATION FOR FLIGHT

FUEL SYSTEM

Re-fuelling

11. There is a filler cap to each pair of wing fuel tanks, under the wing top skin, accessible through flush doors. A combination tool (Stores Ref. 26BY/13795) for the fuel and Dzus fasteners, is stowed in the starboard undercarriage wheel well. The filler cap for the two wing centre tanks is in the fuselage skin on the port side below the canopy.

12. The filler cap for the long-range tanks, when fitted in the bomb bay, is in the fuselage starboard side-panel below the wing. Each wing drop tank has a filler cap on the top, at the forward end.

Draining

13. The fuel tanks may be drained by removing the drain plugs from the sumps which are accessible through doors at the rear end of the tank bay panels. The centre and bomb bay tanks can be drained when the bomb doors are opened; alternatively, the bomb bay tanks may be drained through the fuel hose when disconnected from the rear of the Amal valve. The immersed pump should be switched ON until fuel ceases to flow from the hose and then immediately switched OFF. The wing drop tanks have a drain plug at the rear end.

Draining water

14. Any water which has accumulated in the tanks or fuel gallery can be drained when the aircraft is in the tail down position. Approximately one quart of fuel should be drained at each plug ; this will remove any water collected in the tank sumps or fuel gallery sump bowls. It is only necessary to unscrew the drain plugs two complete turns for controlled draining.

Wing drop tank installation (*fig. 6 and 7*)

15. The wing drop tanks are fitted to the drop tank release gear which is attached to the wing ribs No. 8. Before the tanks are assembled to the release gear, ensure that the setting of the slip release units is correct. This is IMPORTANT. The following check should be made :—

(1) Operate the linkages, through the access holes in the fairings, and ensure that the slip releases open and close freely and easily.

(2) With the tank attachment eye-bolts in position and the slip releases in the closed position, press upwards on the serrated discs B to cock the units.

(3) Push the test triggers A in the direction indicated by the arrow (*fig.* 7) and if it is not possible to move the triggers, the units are safely cocked. If a trigger operates, then the unit must be re-set by again pressing disc B.

(4) Press the jettison switch in the cockpit to ensure correct functioning of the electro-magnetic release, then re-cock the units by pressing on disc B and testing with triggers A, leaving the slip release hooks open.

Note . . .
The selector switch under the front spar in the bomb bay, labe.led BOMBS-TANKS, *must be set at* TANKS *for this test and remain in that setting while the drop tanks are carried.*

16. When installing the drop tanks, first fit the glass " break " tubes on the air pressure and fuel delivery lines at the hose connections on the rear spar (*fig.* 6). It may be necessary to remove the plate covering the pipe line hoses and the blanking plug from the airline hoses before it is possible to fit the " break " tubes. The spigot, Part No. F.981300, must be bolted to an existing nut in rear of each

pipe line aperture. With the tank attachment eye-bolts engaged in the release hooks, check the cocking operation by pressing discs B and triggers A. Remove the detachable panels on each side of the tanks and offer up each tank in turn, guiding the eye-bolts into the tank openings. Raise the tank to the wing surface and ensure that the spigot engages in the tank spigot bracket. Screw on the securing nut and washer until the masked polyvinyl edging on the upper faces of the tank bears firmly against the wing surface and the tank is immovable. The securing nuts must not be overtightened or the action of the release gear may be affected. Through the panel openings, slip the tank hoses over the break tubes and secure them with the clips, supporting the break tubes while doing so. Refit the detachable panels.

Note . . .

When the drop tanks are not carried, and before the cover plates are screwed in position, a blanking plug must be fitted in the air pressure line hoses at the rear spar, and the fuel transfer lines left open.

Drop tanks flow test

17. Trestle the aircraft in the rigging position and then put 30 gall. of fuel in each drop tank. Connect a vacuum pump test rig to the connection on the inlet side of the port engine oil separator and run at approximately 1,400 r.p.m. Turn the fuel transfer cock to ON and maintain a pressure of $2\frac{1}{2} \pm \frac{1}{4}$ lb. per sq. in. in the drop tanks during the test. The transfer of 30 gall. should take approximately 15 minutes.

Installation of long-range tanks

18. The long-range tanks can be fitted in the bomb bay after removing either of the following sets of components.

(1) Aircraft equipped for bombing :—

250-1,000 type bomb carriers.

Bomb slip release gear, complete.

Bomb carrier steady pads, complete.

Front and rear bracing arches, Part No. B.983922 and B.983658, with all the attachment fittings.

The bomb loading cable guide pulley, mounted on the under side of the floor between bulkheads 3 and 4. (The existing nuts and bolts may be replaced with bolts AGS. A.1.6.C, nuts C.P.1 and suitable washers).

(2) On aircraft embodying Mod. 1619 and Mod. 1627 (target towing equipment):—

Target pack container, complete.

Container stay tubes.

Container mounting assemblies.

Rear shelf assembly, complete with pulleys.

Pulley assembly on bulkhead 2, complete.

Fairlead assembly on front bomb crate.

Pulley assembly on rear bomb crate, complete.

Release unit control cables and bungees, complete.

19. To install the long-range tanks (No. 11 and 12) (*fig.* 8) :—

(1) Remove the blanking plug from the pressure venting hose just below and to the rear of the starboard centre tank.

(2) Fit vent pipes, Part No. P.981029-30, to the underside of the floor between bulkheads 3 and 4, securing them with clip, Part No. DHS/28/27, and connect the vent pipe to replace the blanking plug removed in sub-para. (1).

(3) Bolt the tank bearer, bottom portions, Part No. B.983455-56 to the bearers at C.

(4) Connect the tank straps, Part No. E.98436-37 (37 L.H.), to the bearers at D. The left-hand threaded trunnions should be fitted on the left-hand straps and the right-hand threaded trunnions on the right-hand straps.

(5) Connect the tank straps, Part No. F.98433 and E.98439 (39 L.H.), to the eye-bolts in rear of the tank bearers at C. (Bushes, Part No. E.98259 are not used here).

(6) Bolt the tank bearers, Part No. B.981616A, Mk. 5 and Mk. 6, (Mk. 5 L.H.) to the rear mounting frame at B, and connect straps, Part No. E.98434-35 (35 L.H.), to the bearers.

(7) Attach straps, Part No. E.98433-36 (33 L.H.), to the centre-tank bearer, and pin the bearer to the eye-bolts under ribs No. 1.

(8) Bolt bracing struts, Part No. B.984324, to the centre-tank bearer and to the eye-bolts forward of the bearer attachments.

(9) Bolt bracing strut brackets, Part No. B.984335, to the centre-tank bearer. Bolt bracing struts, Part No. B.984322, with the adjustable ends uppermost, altering the length to suit, to brackets, Part No. B.984335, and the brackets on No. 3 bomb door hinges. The right-hand No. 3 hinge attachment has four washers (A.G.S.160E) between the strut and the inboard side of the bracket ; the left-hand side has none.

(10) Bolt the tank bearers, Part No. B.981616A and B.981616A, Mk. 2, (Mk. 2 R.H.) to the rear flange of the front bomb mounting frame at A ; to these bearers bolt the tank straps, Part No. E.98433-36 (33 L.H.).

(11) Bolt brackets, Part No. B.984334, to the underside of the outer flanges of the front bomb mounting. To these brackets, and the outboard sides of the bomb door No. 2 hinge brackets, bolt struts, Part No. B.984323 (adjustable ends uppermost), adjusting their lengths to suit.

(12) Remove the blanks (vent, balance and immersed pump outlet) from No. 12 tank. Connect the hose, Part No. P.981386 to the immersed pump.

(13) Offer up No. 12 tank and connect the tank straps with the adjusters.

Note . . .

The position of the tank will be determined by the vent pipe connection ; as an approximation, the front end of the tank should be 54·5 *in. from the front spar datum. As the tank is being offered up, connect the electrical leads to the immersed pump and the fuel contents gauge tank unit.*

(14) Remove the blanking plug from the rear of the Amal valve and connect the flexible hose from the immersed pump.

(15) Remove the blanking caps (vent, balance and filler neck) from No. 11 tank and clean the inside of the filler neck extension on the fuselage port side-panel.

(16) Attach the hoses to the vent, balance and filler neck connections of No. 11 tank.

(17) Offer up the tank and engage the hoses with the corresponding connections on No. 12 tank and the filler neck extension. The position of the tank is governed by the alignment of the filler neck and the clearance between the balance pipe ends of the two tanks. The front end of No. 11 tank should be approximately 3·5 in. aft of the front spar datum.

(18) Connect and tighten the tank straps, and hose clips. Join the tank bonding to that of the filler neck extension.

(19) Check the tightness of all the tank straps and wire-lock the strap adjusters.

(20) Fill the two tanks and check the fuel contents gauge on junction box B for correct operation. Effect a fuel flow and pressure venting test.

OIL SYSTEM

Filling

20. The main oil tanks are filled (through filler caps) from inside the wheel well. A dipstick is provided in each tank. Tank capacities and the oil to be used are given in the Leading Particulars, and a diagram of the system appears in Sect. 8. The filler cap of the long-range tank is situated on the top of the fuselage aft of the dinghy compartment. A dipstick is not fitted and the tank should be filled until the oil just shows in the filter neck extension.

WARNING

Ensure that the filler cap washer is serviceable, and then fit the cap very firmly to make an air tight joint and prevent loss during oil transfer.

Draining

21. The drain plug for the main oil tanks is fitted below the feathering pump hose banjo connection at the base of the tanks. This drain plug is accessible from inside each wheel well. To facilitate draining, the filler cap should be opened and the system drained while the oil is hot.

22. There are two methods of draining the long-range tank. The first is by direct drainage of the oil from the two drain

plugs situated at the rear end of the tank ; great care must be taken not to spill the oil during this operation, The second method, which can be adopted if the main oil tanks are also being drained, is to first transfer the oil by the normal pipe lines from the long-range to the main oil tanks. The fuel transfer cock should be OFF, the oil transfer cock(s) ON, and a source of compressed air, limited to approximately 4·5 lb. per sq. in. connected to the inlet, side of the vacuum system oil separator on the port engine.

Installation of long-range oil tank (*fig. 9*)

23. Before the long-range tank can be fitted, the drive unit, Type 114, and mounting, and the aerial mounting Type 361, Part No. N.986689, must be removed from the wing decking and lashed to the top of the transmitter, T.1629, fitted in the rear fuselage. Felt packing is to be used between these components and the transmitter case. To install the tank proceed as follows :—

(1) Remove the dinghy stowage (*para.* 35).

(2) Fit the tank supporting straps to the tank mountings ; the short straps are attached to the top mounting.

(3) Remove the blanking nuts from the oil transfer pipes at the rear of the draught-proof bulkhead and the blank from the transfer air pipe.

(4) Connect the oil pipes, Part No. Q981485 and Q981486, to the adapters on the draught-proof bulkhead and slip the heating duct over them. Secure the heating duct to the draught-proof bulkhead with locking wire.

(5) Remove the blanks from the oil tank filler neck and the oil transfer elbow adapters.

(6) Insert the tank through the dinghy stowage opening, offer-up to the bearers and connect the supporting straps.

(7) Align the tank filler neck with the filler neck extension and join the two with the hose connection. Make the bonding connection at this point and, with the bonding flex under the hose clips, tighten the clips.

(8) Tighten and wire-lock the tank supporting strap adjusters, and connect the pressure-vent pipe to the filler neck extension.

(9) Connect the oil transfer pipes to the tank elbows, and the heating duct to the tank heating bag with locking wire.

(10) Connect a source of compressed air to the vacuum system (*para.* 22) and make a pressure test on the installation with the oil transfer cocks OFF (*Sect.* 5).

(11) With the main oil tanks partially empty, carry out an oil transfer flow test, using the dipstick to check the quantity transferred. This should be equal for both tanks, the rate of transfer being dependent on the oil temperature.

Oil dilution

24. On engines and oil systems which have been in use over long periods, the initial operation of the oil dilution system results in the dislodging of accumulations of sludge and carbon with possible contamination and choking of the oil filters. This is avoided by cleaning all oil fiters before operating the system and then cleaning the oil tanks and filters after operation. In order to establish constant readiness for cold weather operation and to avoid unnecessary cleaning of the filters, etc., which is necessary when the system is not being used frequently, the oil dilution system is to be operated daily. The operation of this system, which also cleanses the oil system, is covered in detail in the Servicing Schedule.

COOLANT SYSTEM

Draining

25. Three cocks and three drain plugs are provided for draining the coolant system. One cock is situated on the bowl of the circulating pump and one on the bottom of each cylinder jacket feed pipe. Two drain plugs are fitted on the bottom of the radiator, one for the cabin heater portion, the other for the main radiator. The header tank is also provided with a drain plug. To empty the system completely it is essential that all three cocks be opened as approximately 10 gall. only can be drained through the cock on the pump bowl.

Filling

26. The header tank filler cap is situated on the top port side of the tank and is designed so that it cannot be removed by normal methods until the pressure has

dropped sufficiently to allow safe removal. When the coolant temperature is above 65 deg. C., the cap may be unscrewed two complete turns to reduce the pressure. Further movement will not be possible until the pressure has dropped to that of the atmosphere. The venting plug of the coolant and intercooler header tank should be unscrewed when filling either system. Proceed to fill the system until the coolant is level with the filler neck and screw up the filler cap and the intercooler header tank vent plug. Then run the engine slowly for a period which is insufficient to heat up the coolant but sufficient to circulate the fluid and remove any air trapped in the system. The header tank can then be topped up and the vent plug locked. Coolant system capacities and composition of coolant will be found in the Leading Particulars.

INTERCOOLER SYSTEM

Filling and draining

27. The filler cap for the intercooler system is on the header tank at the rear of the engine and is accessible through a door on the left-hand side and midway along the engine top cowling panel. The coolant is similar to that used in the engine coolant systems, and when filling the empty system nineteen pints of fluid will be required. With the vent plug open, fill the system until the fluid is level with the filler neck, replace the cap, close the vent plug, and then run the engine to remove any air trapped in the system. Finally, top the header tank with approximately two pints of coolant. Plugs in the radiator, accessible through a panel in the bottom of the nacelle fairing, and a cock in the pipe line to the supercharger casing are provided for draining the intercooler system.

DE-ICING SYSTEM (*fig. 11*)

28. The reservoir is mounted in the rear fuselage, above the air storage cylinder and is accessible through the rear entry door. The capacity of the reservoir is one gallon.

HYDRAULIC SYSTEM

29. The hydraulic system reservoir, situated on the starboard side of the fuselage between bulkheads 3 and 4, is accessible through the rear entry door. Fill to the level of the filler neck with the aircraft tail on the ground.

WARNING

It is imperative that fluid is not spilled as special equipment is stowed immediately below the reservoir.

PNEUMATIC SYSTEM

Charging

30. The pressure in the air container may be checked by attaching a 0-500 lb. per sq. in. gauge to the union labelled TEST POINT on the hydraulic-pneumatic panel, mounted on the right-hand side of the rear fuselage forward of the entrance hatch. The maximum pressure in the container is 450 lb. per sq. in. and the minimum, prior to take-off, is 200 lb. per sq. in. The container may be recharged via an Instantair coupling mounted at the forward end of the hydraulic-pneumatic panel and labelled PNEUMATIC SYSTEM CHARGING POINT.

Note . . .

The cockpit air pressure gauge indicates the pressure at the output side of the pressure reducing valve and does not indicate the pressure in the container.

Draining

31. The oil-and-water trap, mounted on the hydraulic-pneumatic panel, should be drained in accordance with the Servicing Schedule. Draining is normally effected by holding a suitable container underneath the trap and then turning the spring-loaded knurled knob at the bottom of the trap open. To drain under pressure, either have the port engine running, or apply pressure at the charging point, hold the container underneath the trap and turn the knurled knob open, allowing it to remain in this position until fluid ceases to run out.

OXYGEN SYSTEM (*fig. 10*)

32. Pressure filling of the oxygen system is effected through the high pressure valve labelled OXYGEN SYSTEM CHARGING POINT, positioned on the pneumatic - hydraulic panel.

INSTRUMENT-FLYING PRACTICE SCREENS—AMBER

33. The removable parts of this equipment consist of amber coloured screens and a cover for the D.R. compass repeater bracket, which are attached by metal fasteners to fixed fittings on the inside of the forward portion of the cockpit. The

order of assembly of the screens is—front upper screen, side screens, emergency exit screen, lower front screen (port side first) and then the cover for the compass bracket. When these screens are in position, their attachment is obvious, but care should be taken to ensure that the rubber flaps exclude all direct white light.

Note . . .

Considerable care against damage is necessary when fitting or removing the screens because of the relatively soft nature of the panels. When removed, the whole equipment must be placed in the bag (Part No. S.982553A) provided for storage purposes.

CANOPY ESCAPE HATCH

34. When fitting the hatch to the canopy, lay it in the correct position on the roof structure. Release the cable clamp at each latch and tap the latches into position until they contact the stops. Move the release lever up to the closed position, secure it with the safety strap and tighten the latch cable clamps.

DINGHY (*fig. 12*)

35. To remove the dinghy from the aircraft, take the manual release ring from its stowage, detach it from the cable and replace it in its original position. Detach the cover plate from the draught - proof bulkhead, where the cable passes through, and release the sealing plug. Remove the four attachment bolts holding the container to the fuselage, disconnect the electrical lead from its socket on the starboard side of the dinghy compartment and withdraw the container. The operating cable must be pulled through the fairleads as the container is removed, and care should be taken to prevent accidental functioning of the blow-off head.

DRY AIR SYSTEM (*fig. 15*)

36. The drier for the windscreen and canopy dry air system is situated on the port side of the fuselage nose. The drying medium, activated silica gel, should be changed when the colour of the crystals is pink. To renew the crystals, unscrew the blanking nut from the dummy stowage, remove the hose union from the drier tube and connect it to the dummy stowage, replacing the hose union with the blanking nut. Remove the drier from its mounting by unscrewing the wing-nut. Slacken the screwed clip nearest the inspection window and, with the outlet valve end uppermost, separate the two sections. Remove the used crystals, clean the filters and refill with fresh crystals. To re-assemble the drier, reverse the foregoing instructions.

CAMERA INSTALLATION (*fig. 13*)

37. The fixed camera mounting structure (Mod. 1116) forward of bulkhead No. 5, has vertical members which are drilled to accommodate several types of camera. The position of the cross-members to suit the different camera types is indicated by labels fitted on the port side mounting structure. The installation procedure is as follows:—

(1) Remove the aperture cover.

(2) Set the cross-members in the structure according to the camera type and the lens fitted.

(3) Lower the Type 45 or 25 mounting centrally on to the cross-members, turn the clamps and tighten them against the cross-members.

(4) Make the necessary adjustments for tilt, etc.

(5) Attach the motor to the starboard mounting, connect the power supply cable to the motor and the motor drive to the camera.

(6) Connect the heater and control leads to the camera.

(7) Fit the appropriate control in the cockpit. The alternative positions are —below junction box B and on the bomb distributor panel.

MULTI-FLASH DISCHARGER INSTALLATION (*fig. 14*)

38. The discharger (Mod. 1358) is mounted on four vertical members attached to the rear of the port engine nacelle. The flare chute projects downwards and a cover plate is fitted when the discharger is not in use. To install the discharger proceed as follows :—

(1) Remove the cover plate which is held by six screws.

(2) Attach the two angle bearers to the discharger.

(3) Lower the discharger with the electrical socket to the rear, until the angle bearers rest on the top flanges of the chute. The flashplate should rest on the asbestos packings inside the chute.

(4) Align the four bolt holes on each angle bearer with the corresponding holes in the chute flanges, insert and tighten the 2 B.A. bolts.

(5) Remove the electrical plug from the adjacent dummy stowage and connect it to the discharger socket.

(6) For loading of the discharger, refer to Section 12.

BOMBS AND PYROTECHNICS

39. The installation of the bomb gear, and the loading of bombs and pyrotechnics is described in Section 12.

TARGET TOWING EQUIPMENT

Stowage of targets (*fig. 16*)

40. Three banner-type targets are carried in a target pack container, mounted in the bomb bay, which comprises three compartments, each of which has a separate door. The targets are retained in position by the container doors, which are secured by sliding locks operated through Bowden cables from a control panel mounted on the port side of the wing decking. Rubber bungees are fitted at each end of the doors and return them to the closed position when the targets have been launched Should the bungee become detached from the doors, the latter, when opened, will hang vertically instead of closing. In this position (open), they may be jammed and then crushed by the bomb doors when returning to UP. This possible damage is obviated by fitting a wooden block on the inside of each bomb door, in the centre. When the bomb doors are returning to the UP position, these blocks make contact with the container doors and move them inwards, towards the closed position. Bungees are also fitted inside the container to assist the exit of the targets. Each target towing cable is connected to a release unit (three in number) mounted on the underside of the fuselage aft of the bomb doors. The method of folding the targets is contained in A.P. 1492A, Vol. 1, Sect. 2, Chap. 4. To stow each target proceed as follows :—

(1) Open the container door by operating the control handle and disconnecting the return bungees.

(2) Connect the towing cable to the target pack and lift the pack into the container, ensuring that the ballast weight is at the forward end and that any free loops of line are laid along the top.

(3) Ensure that the towing cable passes through the slot in the end of the container, close the doors and reconnect the return bungees.

(4) Open the release unit by pushing the operating lever forward, then connect the towing shackle. Release the operating lever, ensuring that the release unit is correctly cocked.

(5) Ensure that the towing cable is housed in the quick-release clips.

7070 79867 4/53 450 C.B.&S.Ltd. Gp.30.

STOWAGES

UNDERCARRIAGE LOCKING CAP AND PICKETING EYE STOWED IN REAR OF WHEEL WELL.
CONTROL LOCKING GEAR STOWED IN PORT SIDE OF FUSELAGE OPPOSITE REAR ENTRY DOOR.

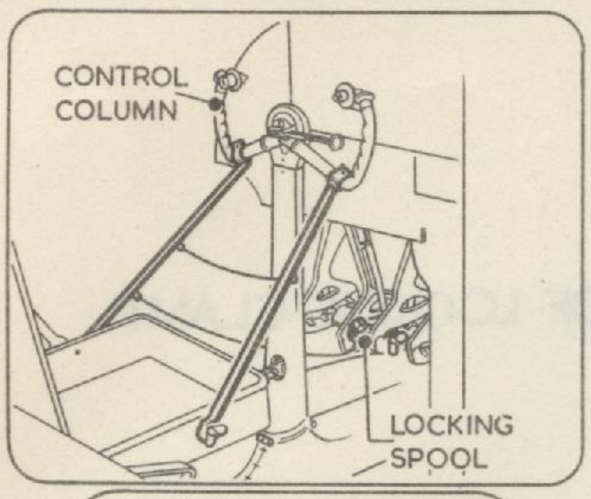

CONTROL LOCKING GEAR

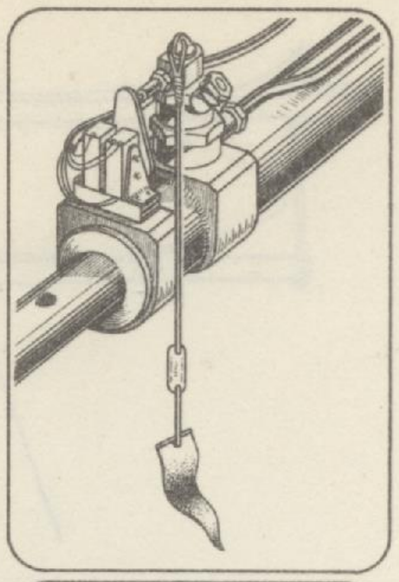

UNDERCARRIAGE LOCKING GEAR

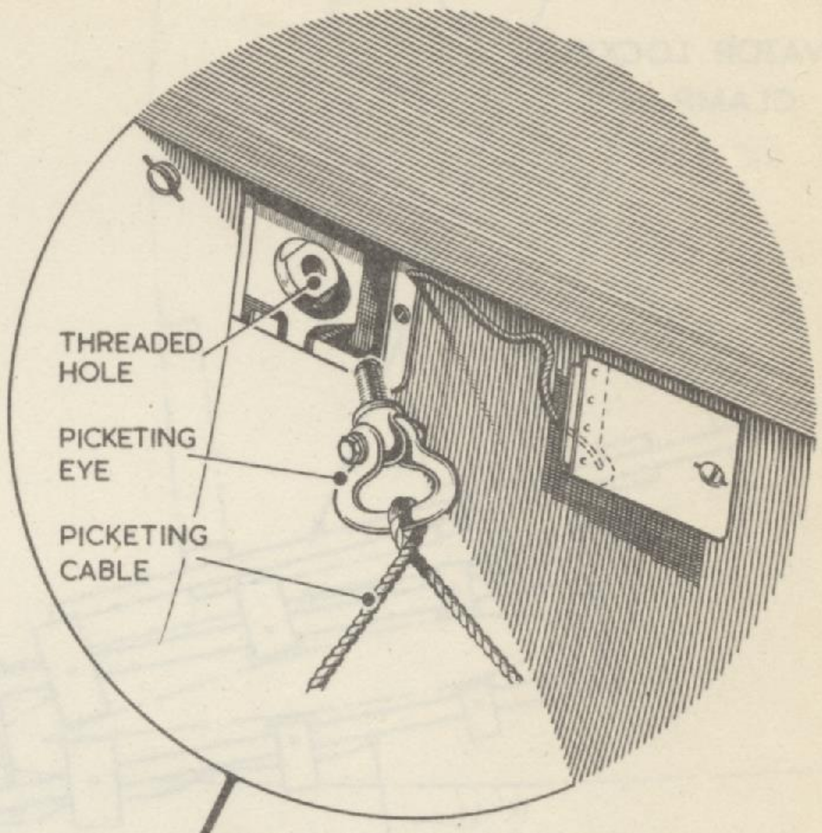

DETAIL OF PICKETING EYE ATTACHMENT

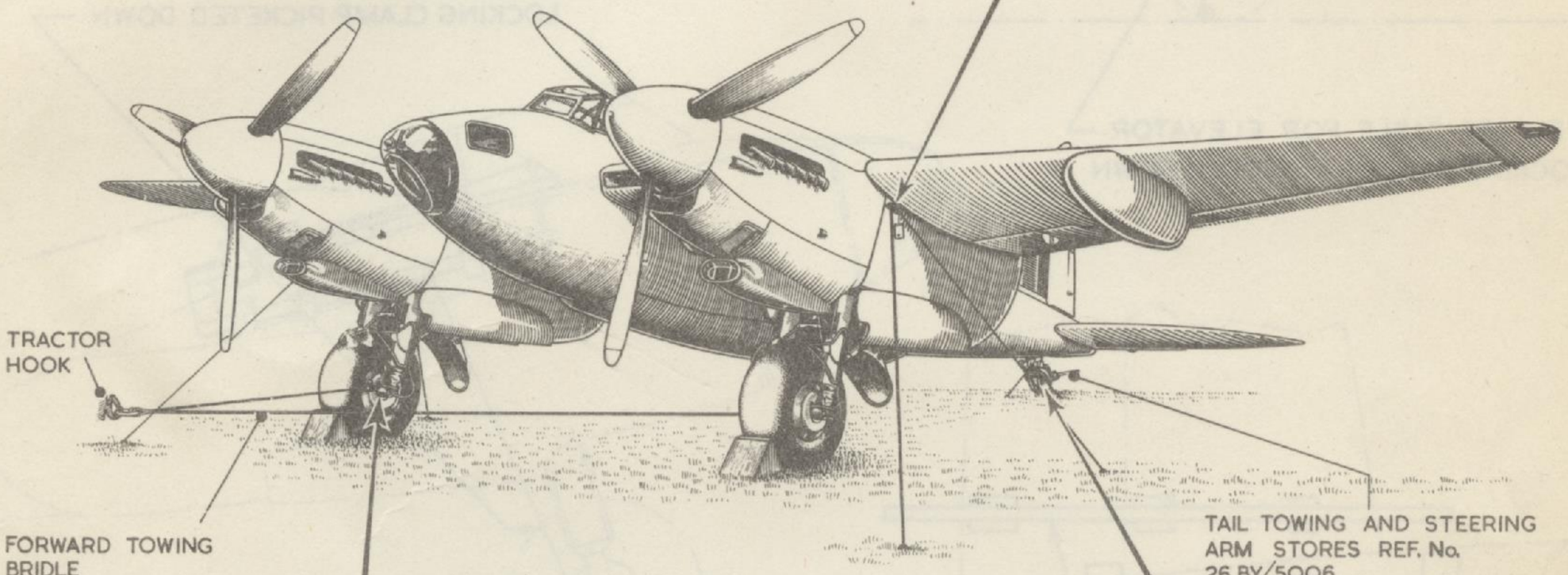

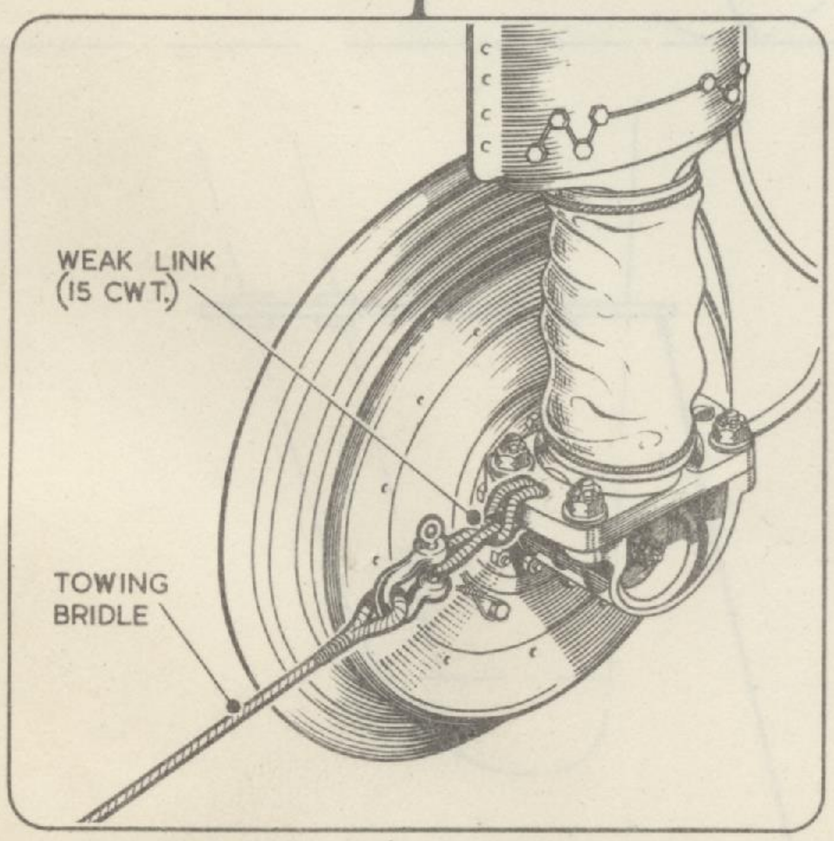

DETAIL OF FORWARD TOWING ATTACHMENT

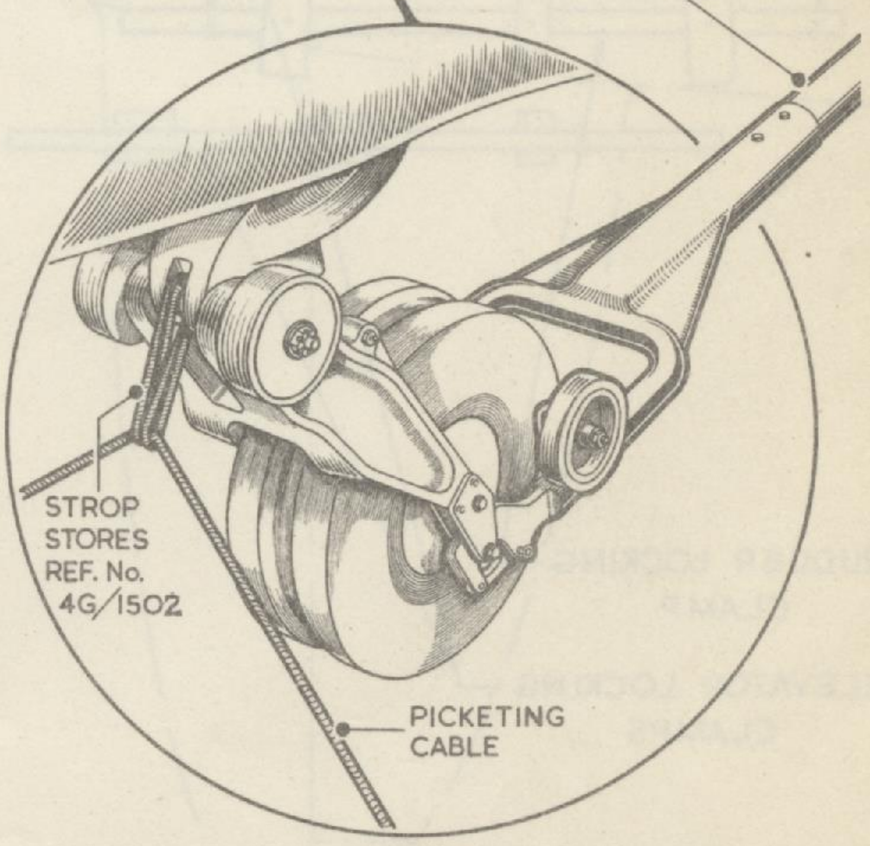

DETAIL OF TAIL PICKETING AND TOWING ARM ATTACHMENT

FIG. 1 TOWING AND PICKETING

7273 61037 12/52 450 C.B.&S.LTD. GP.55

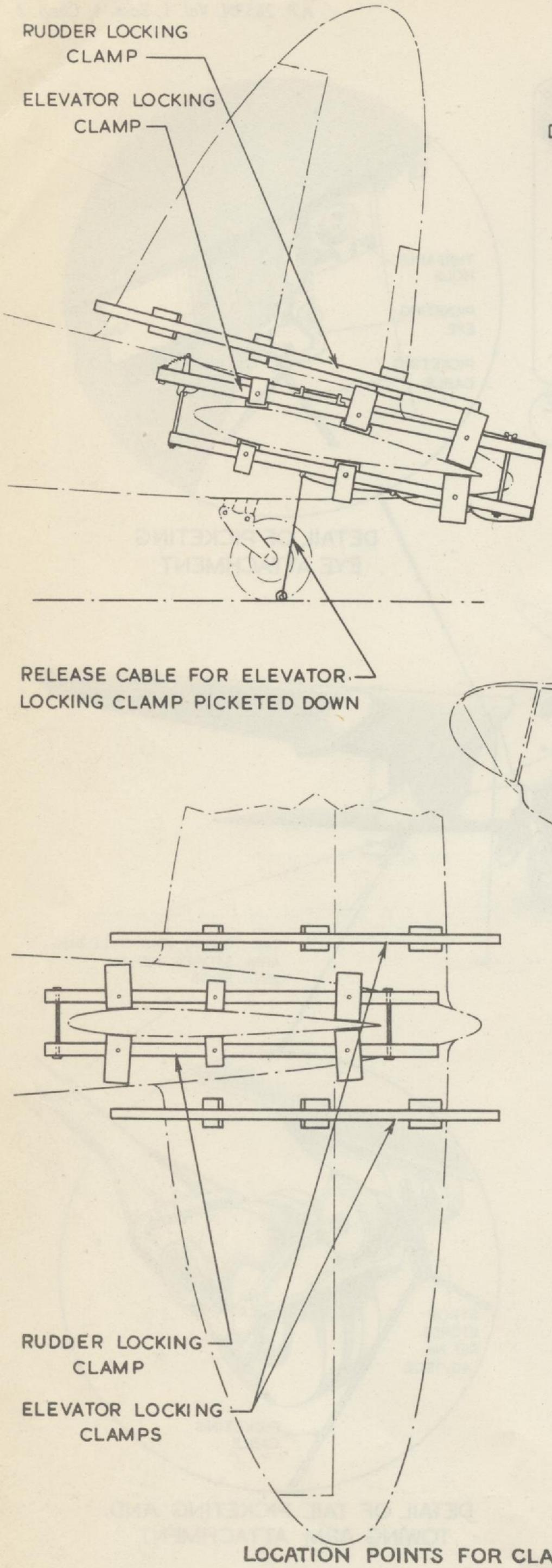

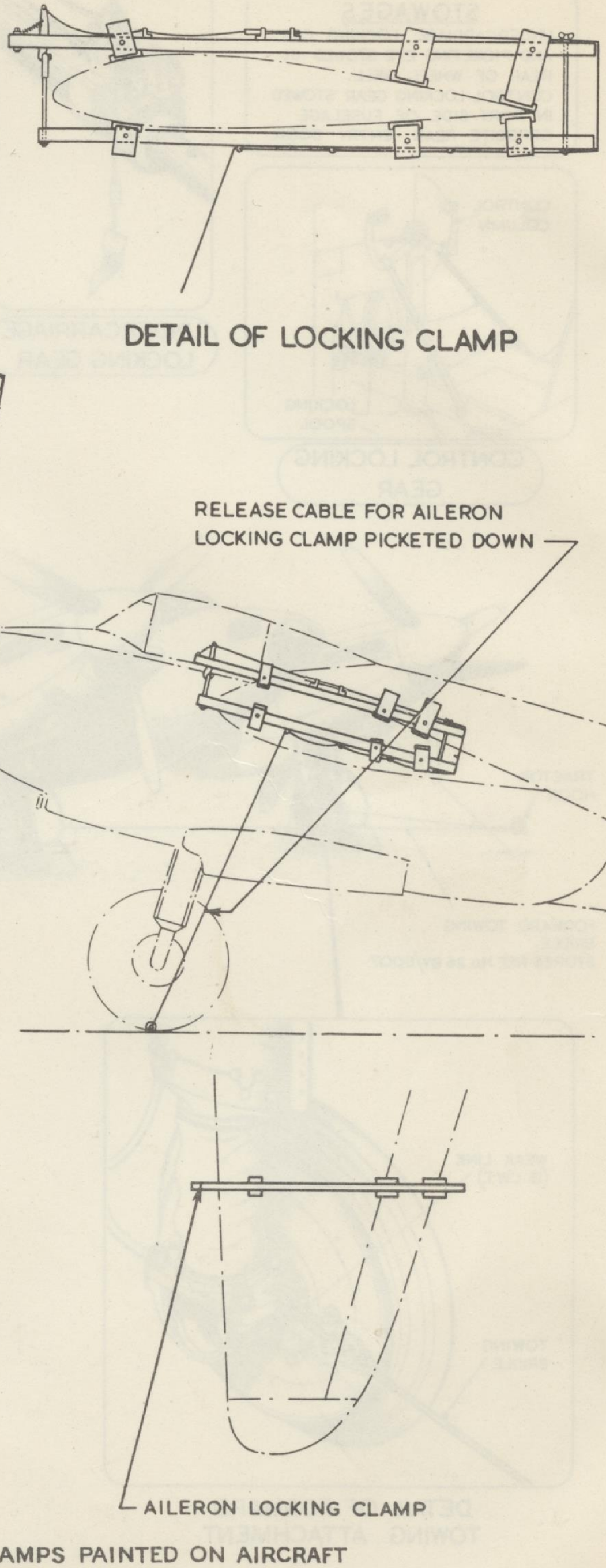

LOCATION POINTS FOR CLAMPS PAINTED ON AIRCRAFT

FIG. 2 ASSEMBLY OF CONTROL LOCKING CLAMPS

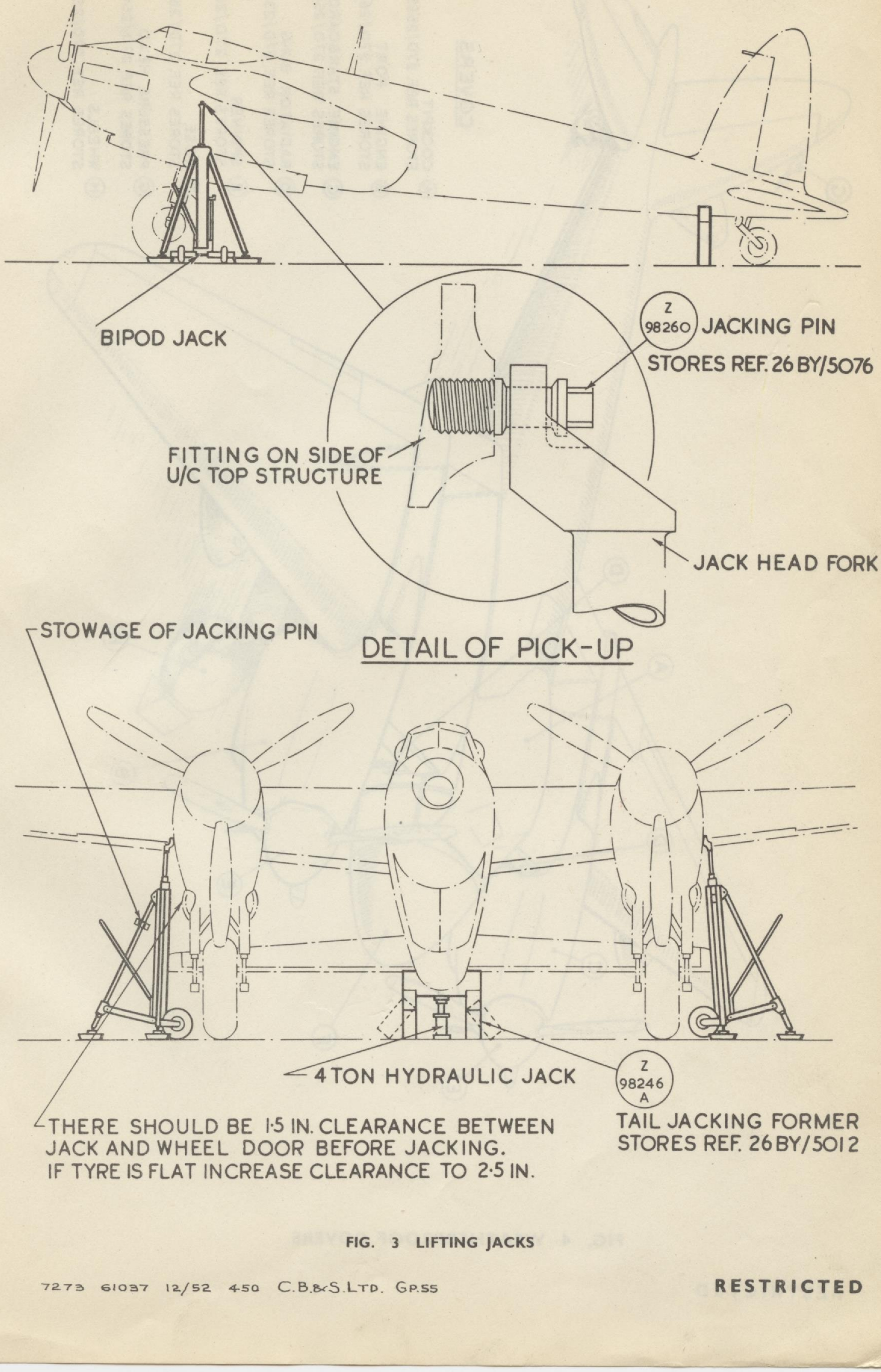

FIG. 3 LIFTING JACKS

7273 61037 12/52 450 C.B.&S.LTD. GP.55

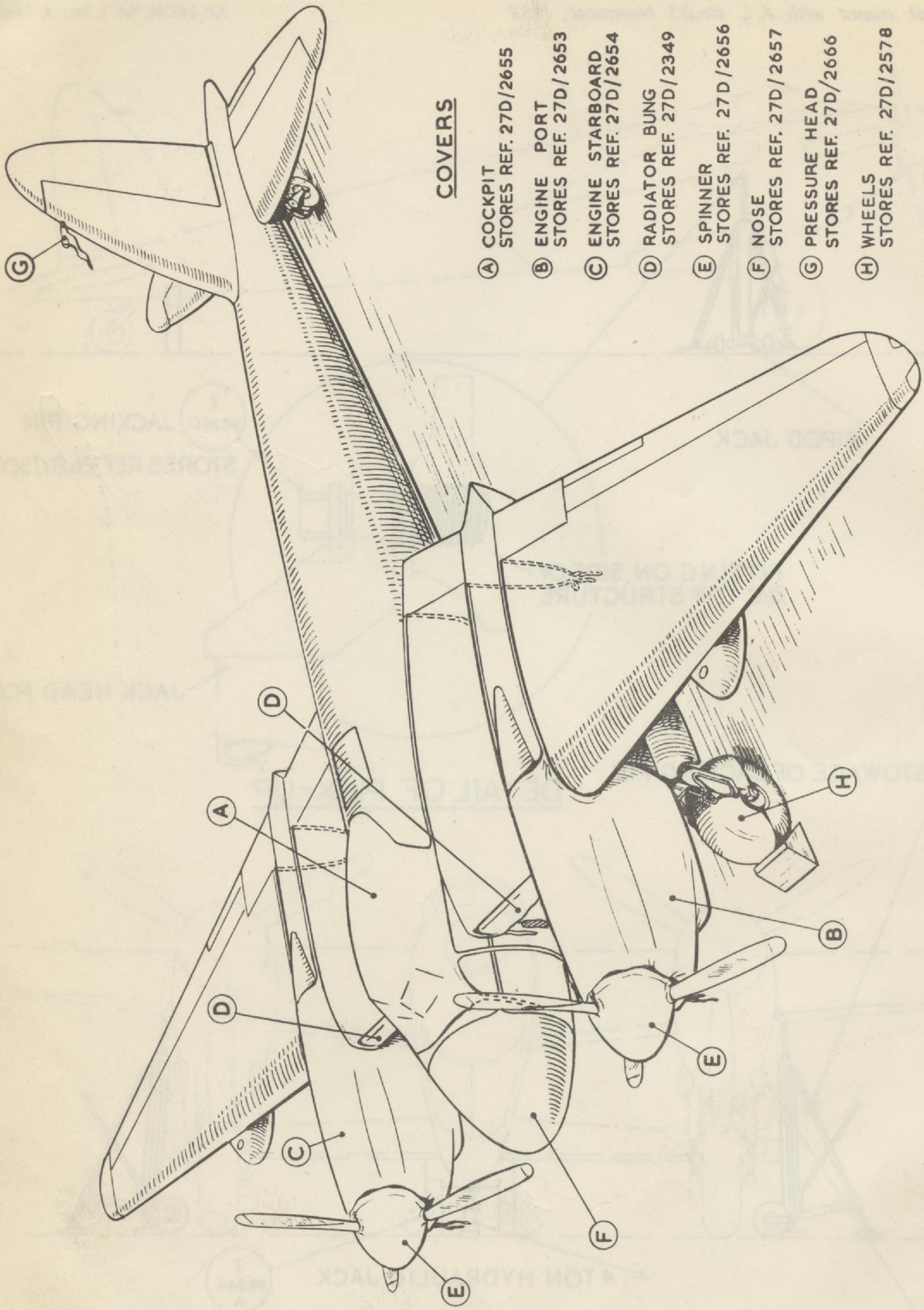

FIG. 4 WEATHERPROOF COVERS

NOTE

IF IT IS NECESSARY TO REMOVE THE FUSELAGE, IT IS MOST ESSENTIAL THAT THE WING BE SECURELY TRESTLED UNDER THE REAR SPAR

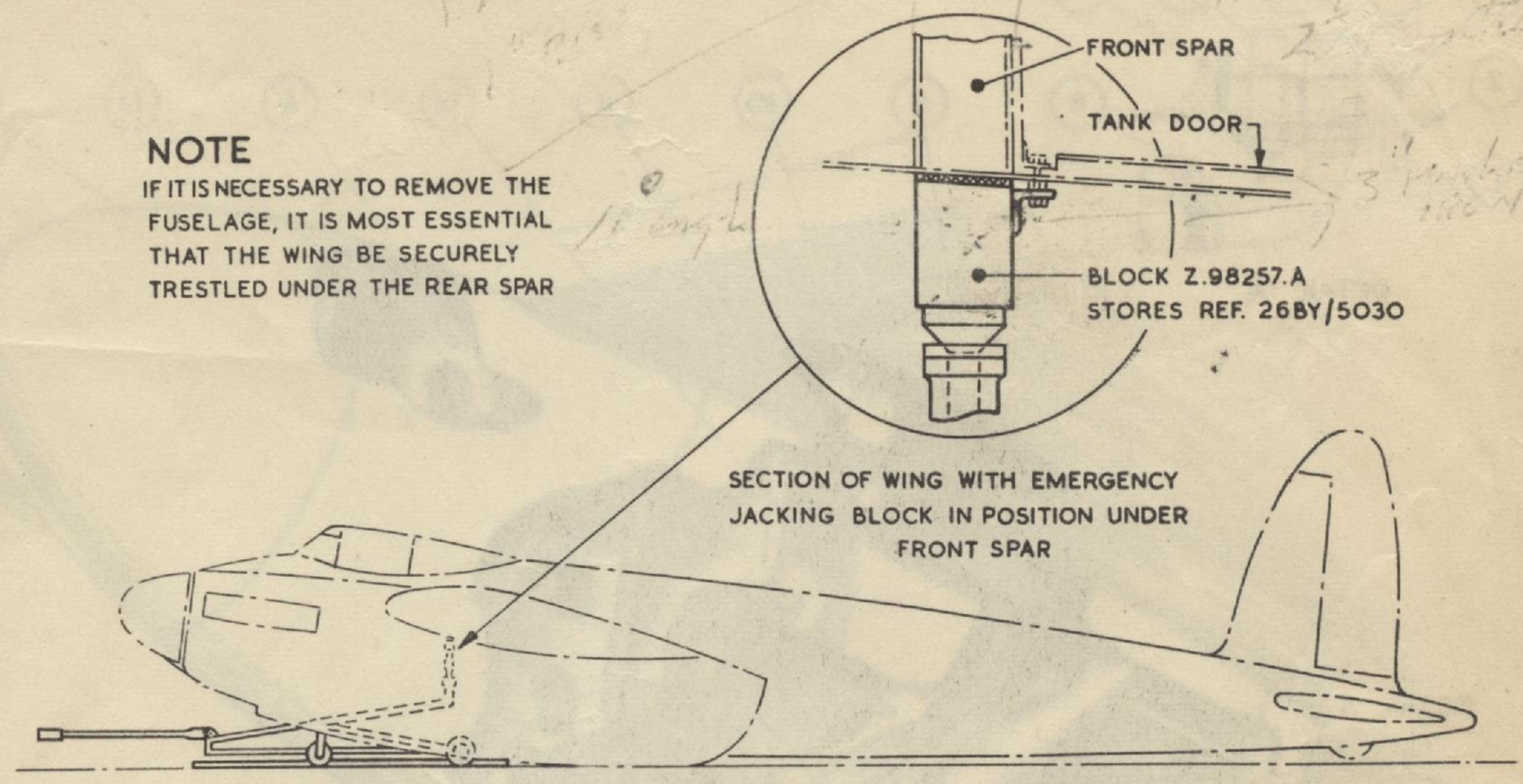

FIRST OPERATION

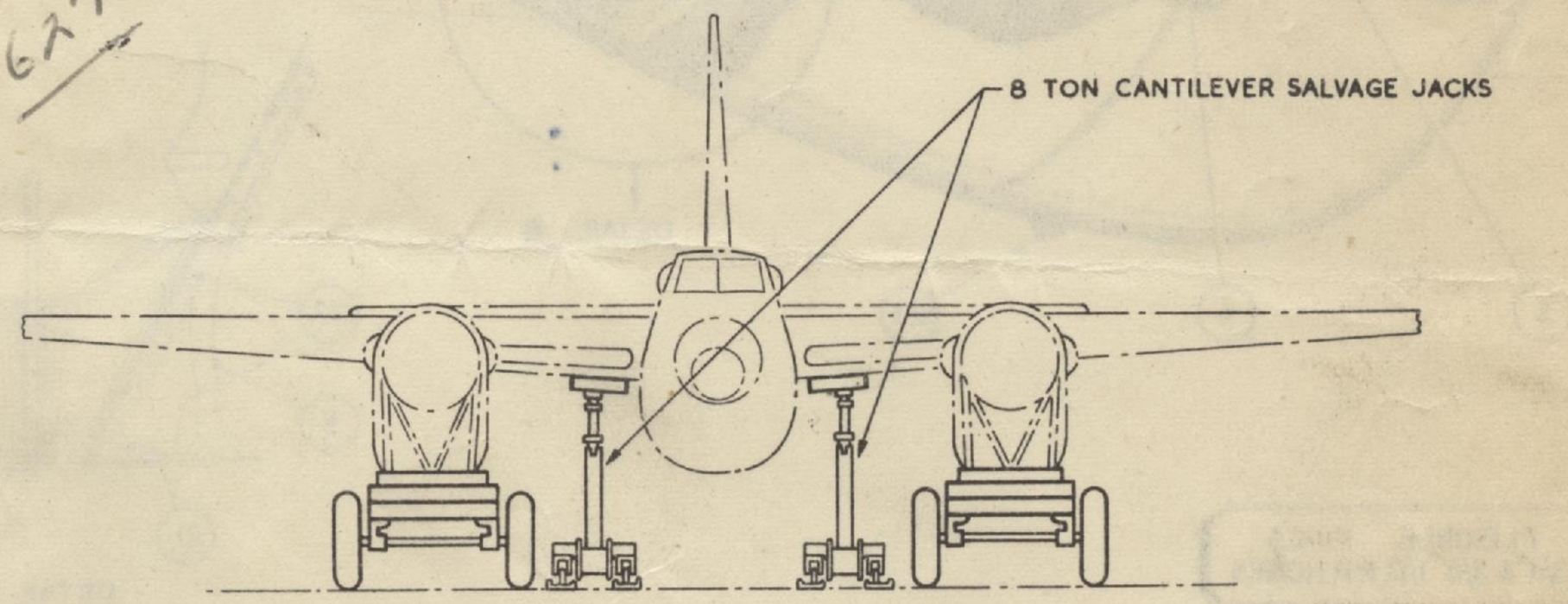

SECOND OPERATION

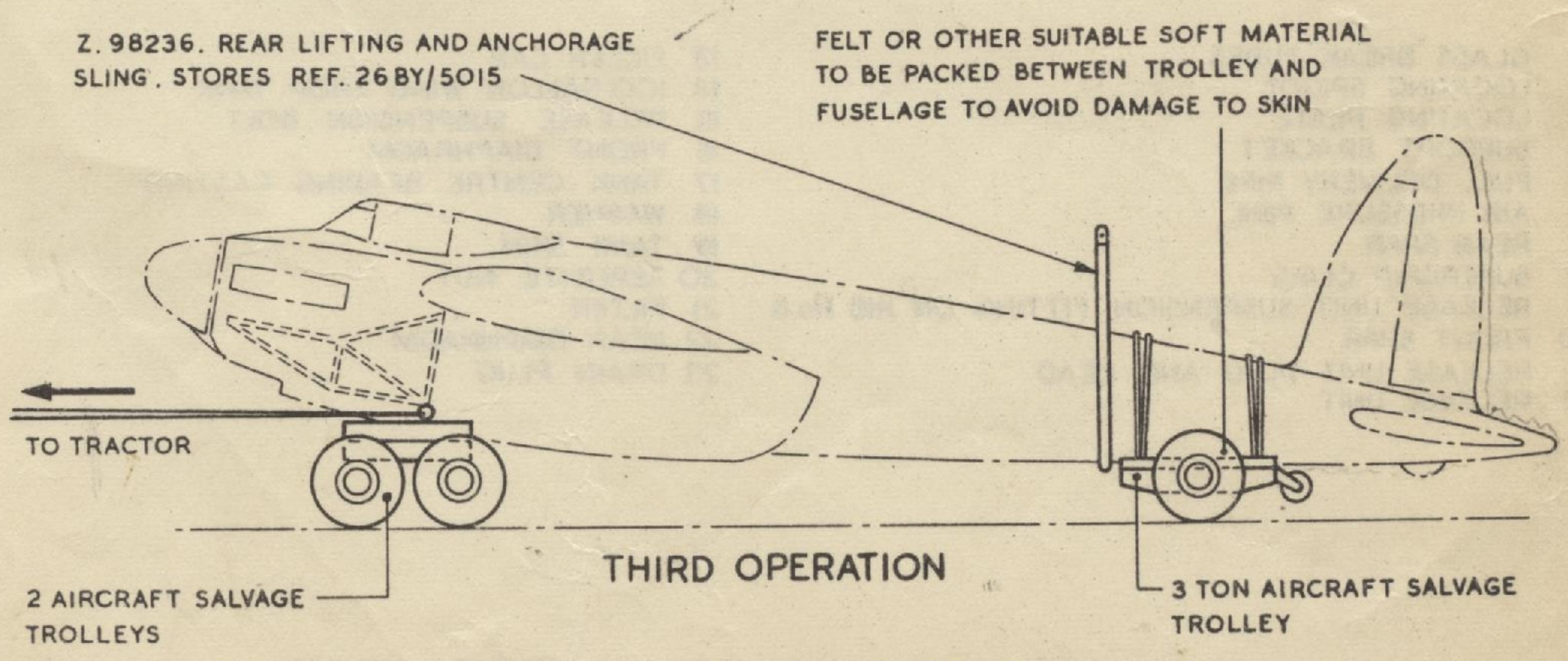

THIRD OPERATION

FIG. 5 SALVAGE OF AIRCRAFT

G1847 M26731 8/49 550 C.B.& S.LTD. GP.55.

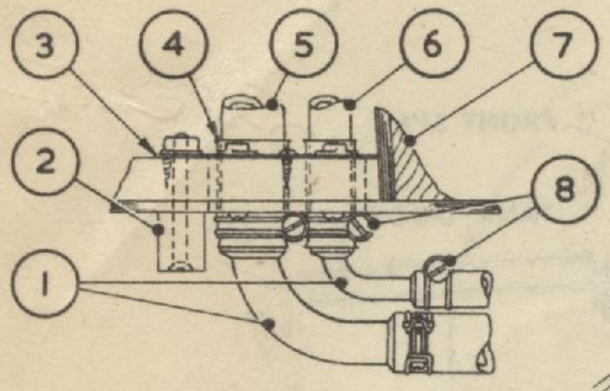

DETAIL A

DETAIL B

FLEXIBLE PIPES
3/4" & 3/8" I/D. P.R.HOSES

1 GLASS "BREAK" TUBES
2 LOCATING SPIGOT
3 LOCATING PLATE
4 SUPPORT BRACKET
5 FUEL DELIVERY PIPE
6 AIR PRESSURE PIPE
7 REAR SPAR
8 SUPERGRIP CLIPS
9 RELEASE UNIT SUSPENSION FITTING ON RIB No.8
10 FRONT SPAR
11 RELEASE UNIT PLUG AND LEAD
12 RELEASE UNIT
13 FILLER CAP
14 100 GALLON WING DROP TANK
15 RELEASE SUSPENSION BOLT
16 FRONT DIAPHRAGM
17 TANK CENTRE BEARING CASTING
18 WASHER
19 TANK SKIN
20 AEROTITE NUT
21 FILTER
22 REAR DIAPHRAGM
23 DRAIN PLUG

FIG. 6 WING DROP TANK INSTALLATION

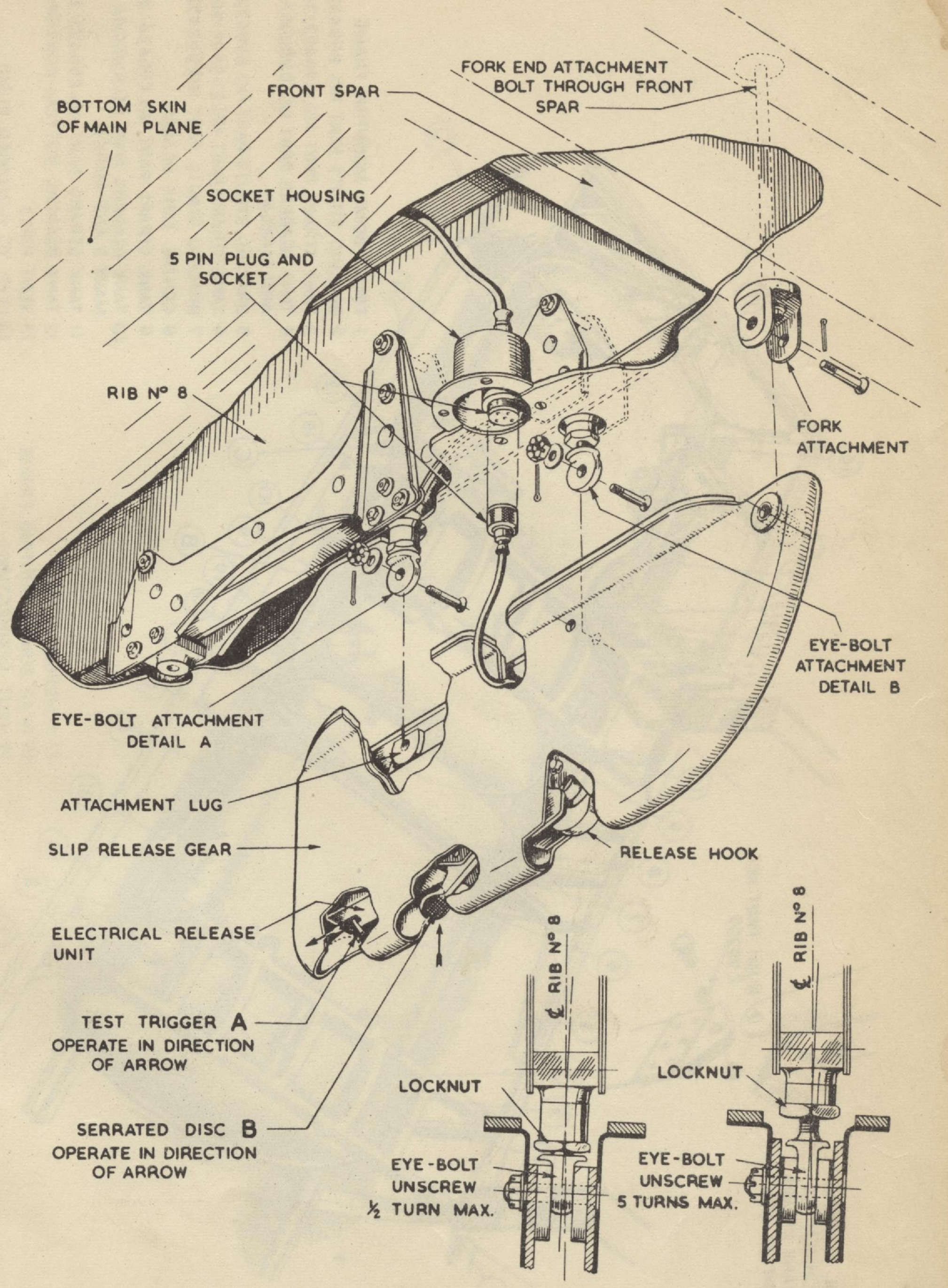

FIG. 7 DROP TANK RELEASE GEAR

G1847 M26731 8/49 550 C.B.& S.LTD. GP.55.

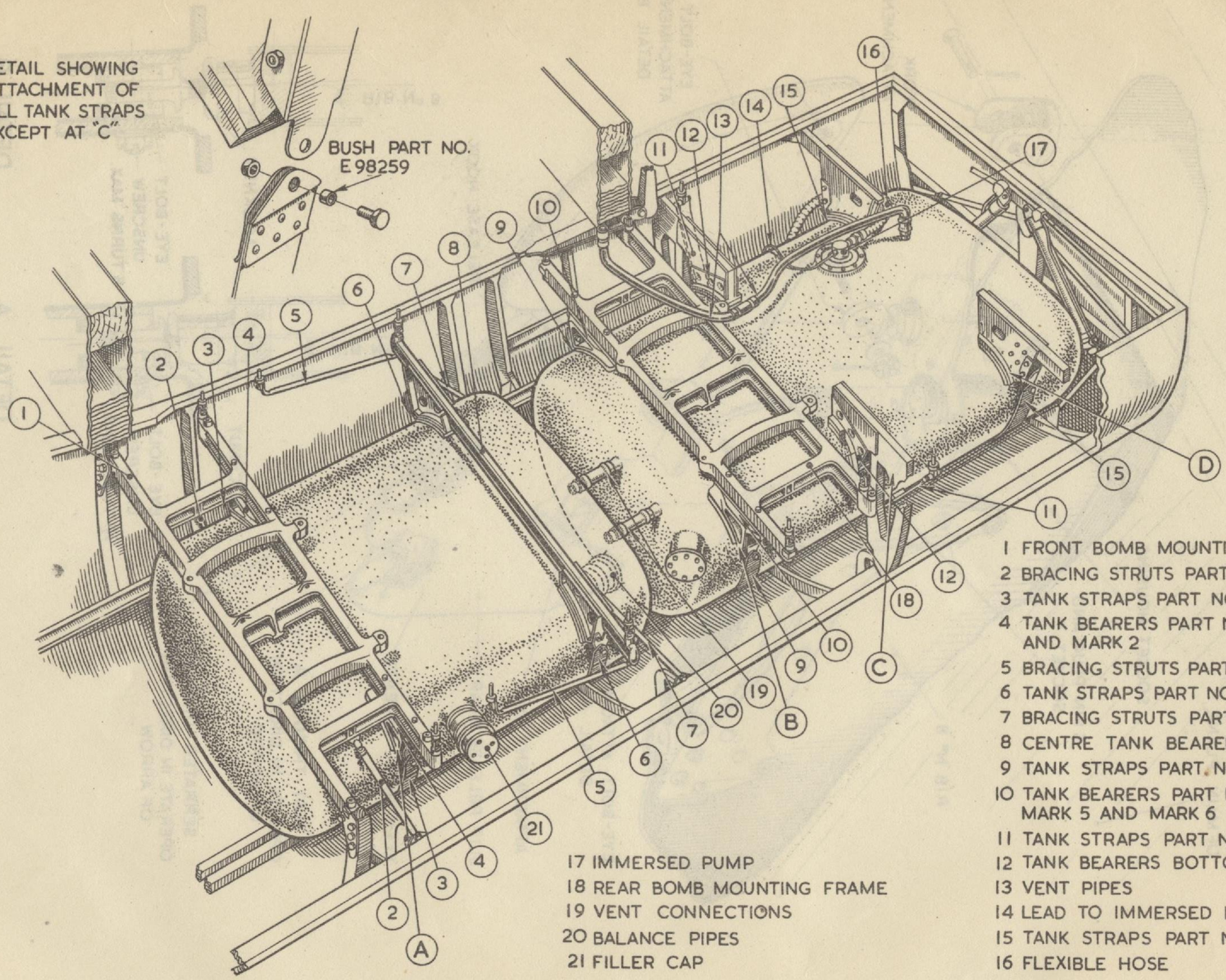

FIG. 8 INSTALLATION OF No. 11 AND No. 12 TANKS

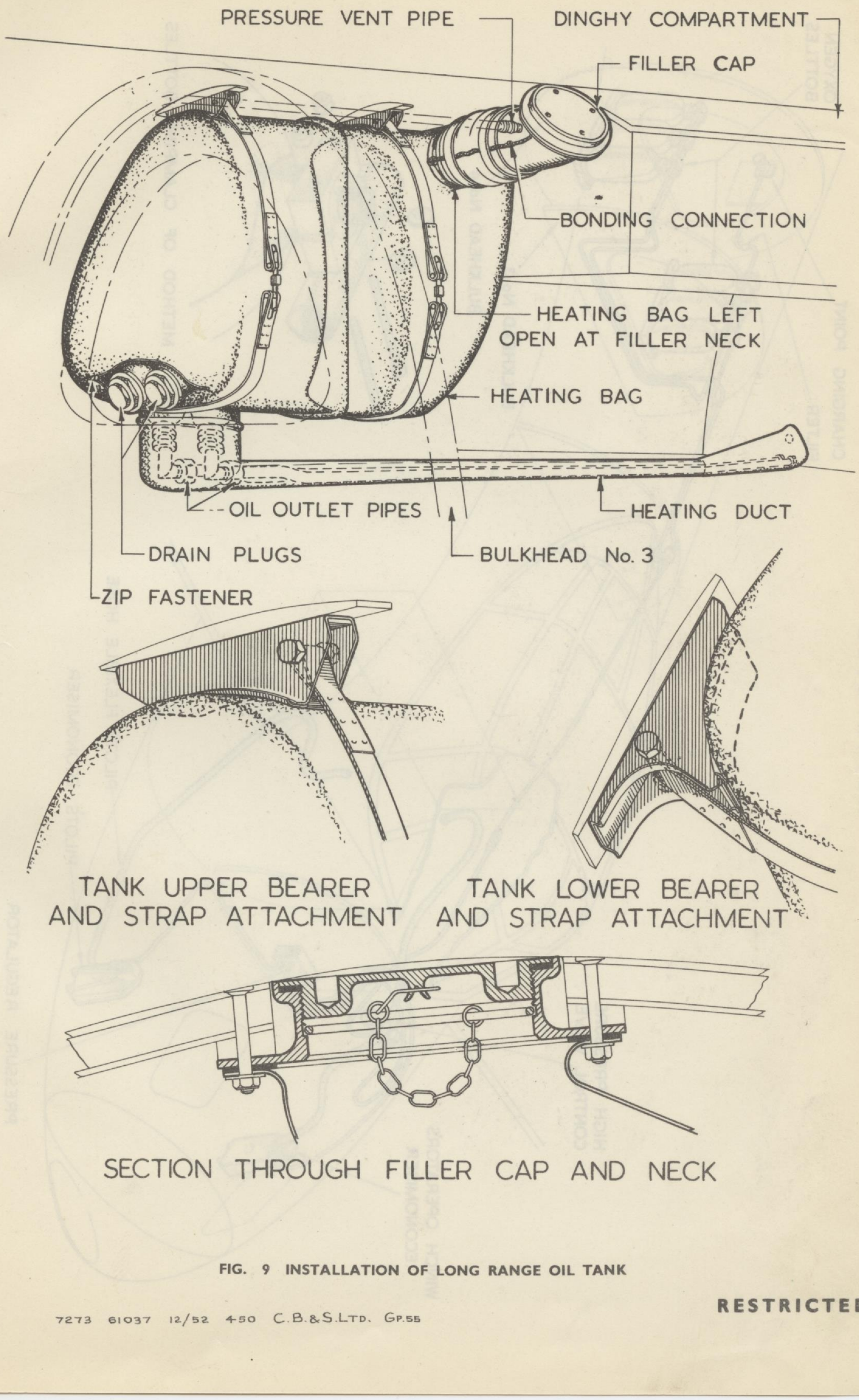

TANK UPPER BEARER AND STRAP ATTACHMENT

TANK LOWER BEARER AND STRAP ATTACHMENT

SECTION THROUGH FILLER CAP AND NECK

FIG. 9 INSTALLATION OF LONG RANGE OIL TANK

7273 61037 12/52 450 C.B.&S.LTD. GP.55

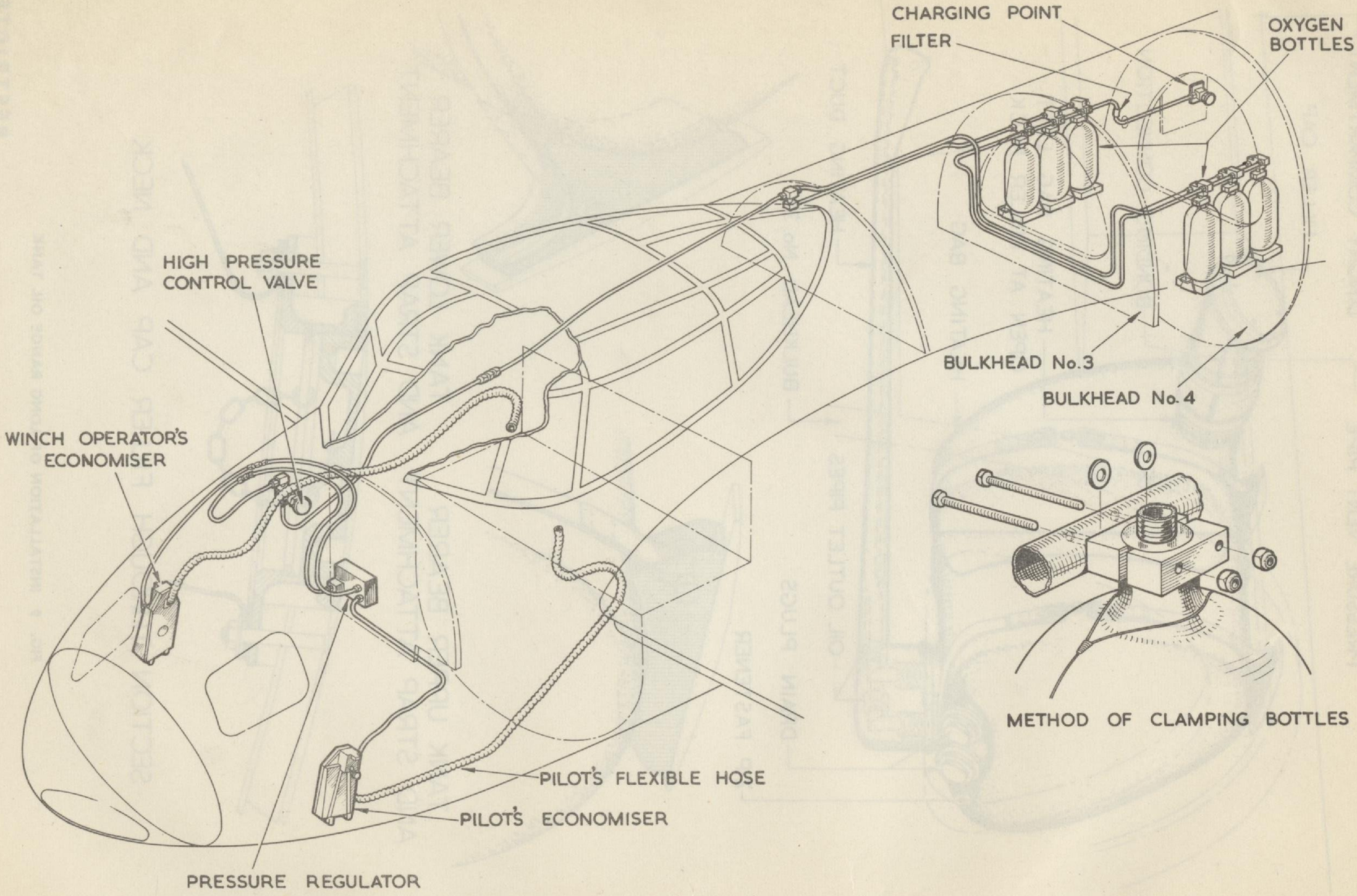

METHOD OF CLAMPING BOTTLES

FIG. 10 OXYGEN SYSTEM

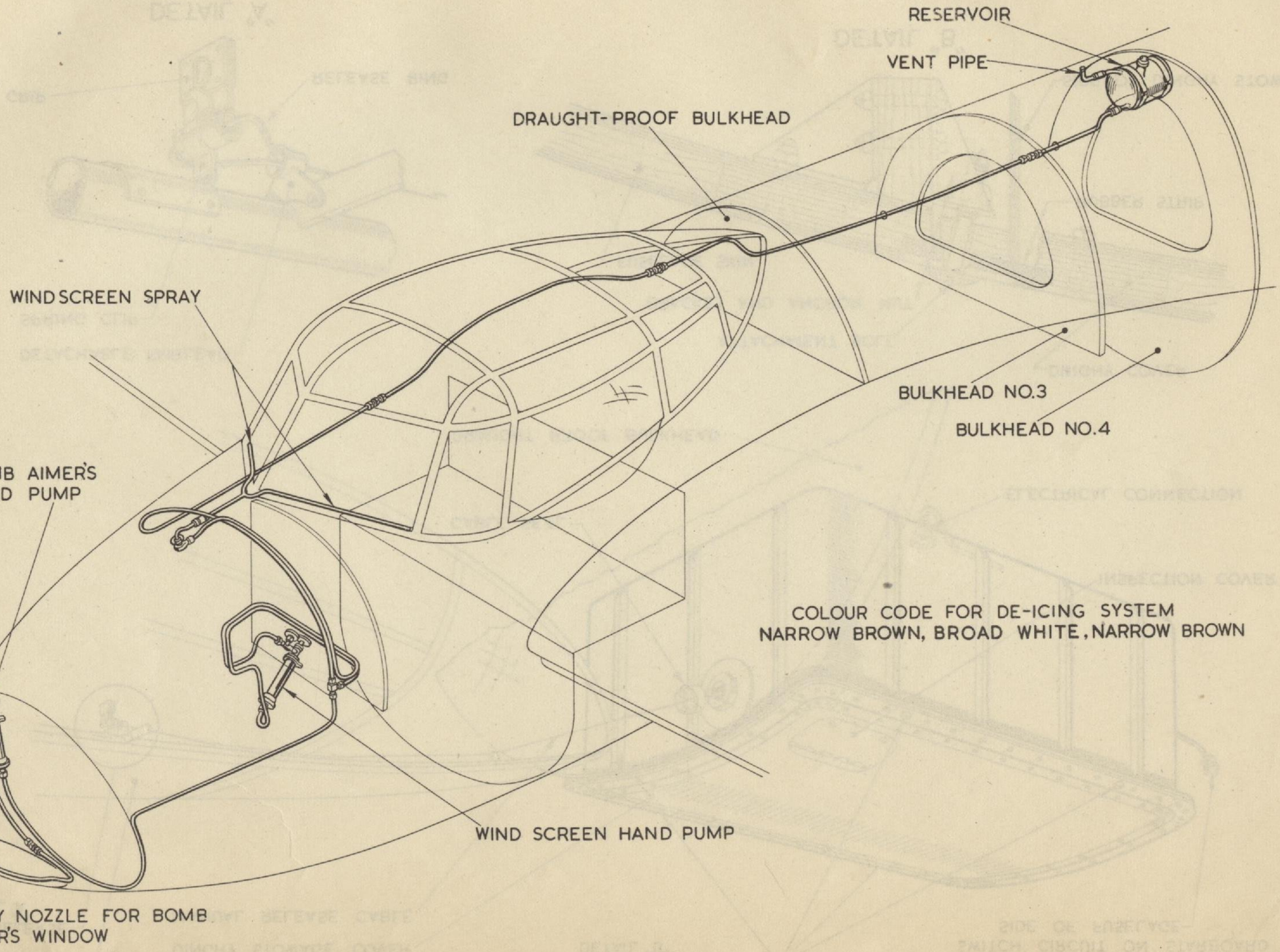

FIG. 11 DE-ICING SYSTEM

COLOUR CODE FOR DE-ICING SYSTEM
NARROW BROWN, BROAD WHITE, NARROW BROWN

G1847 M26731 8/49 550 C.B.&S.Ltd. G.P.55.

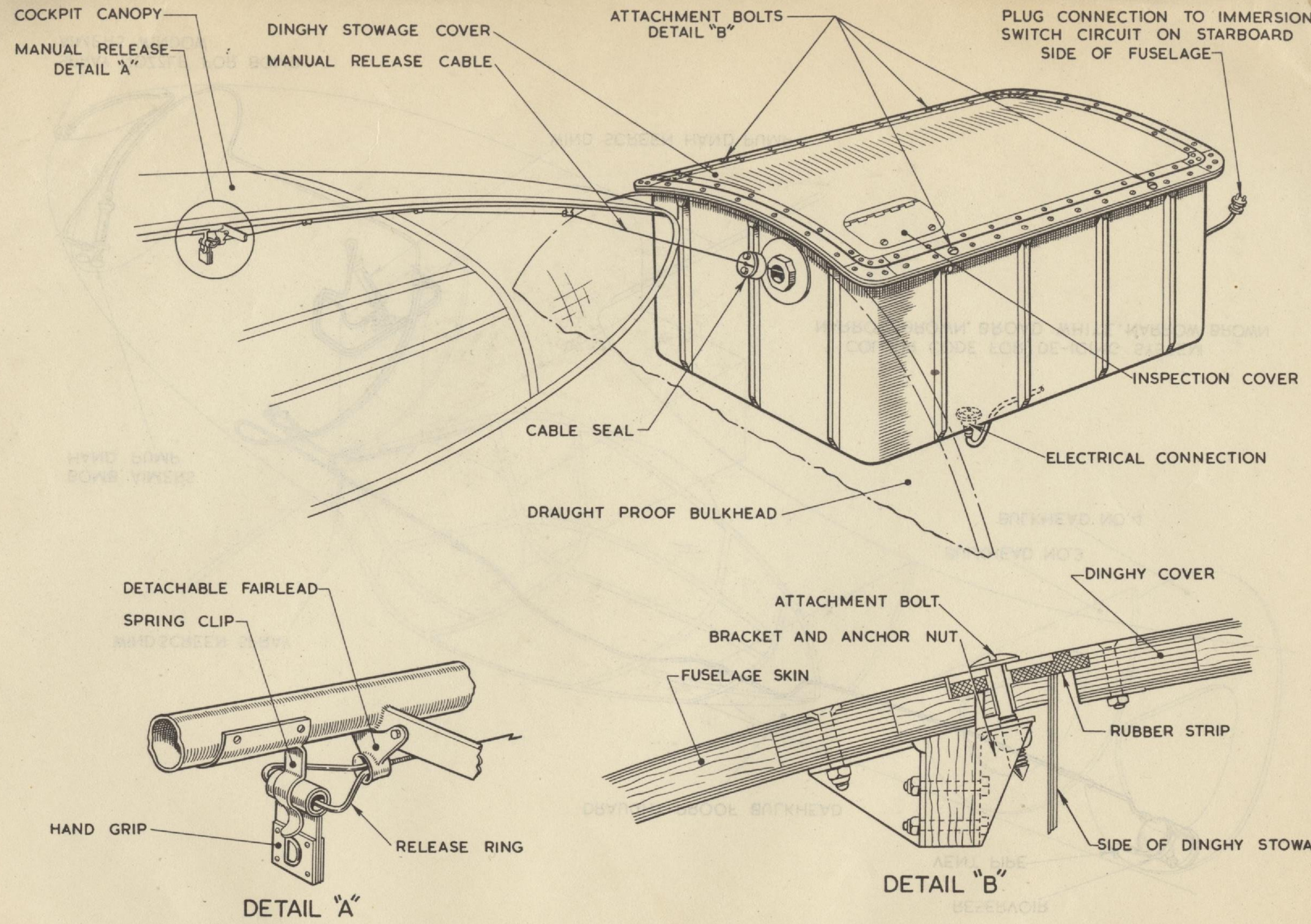

FIG. 12 DINGHY INSTALLATION

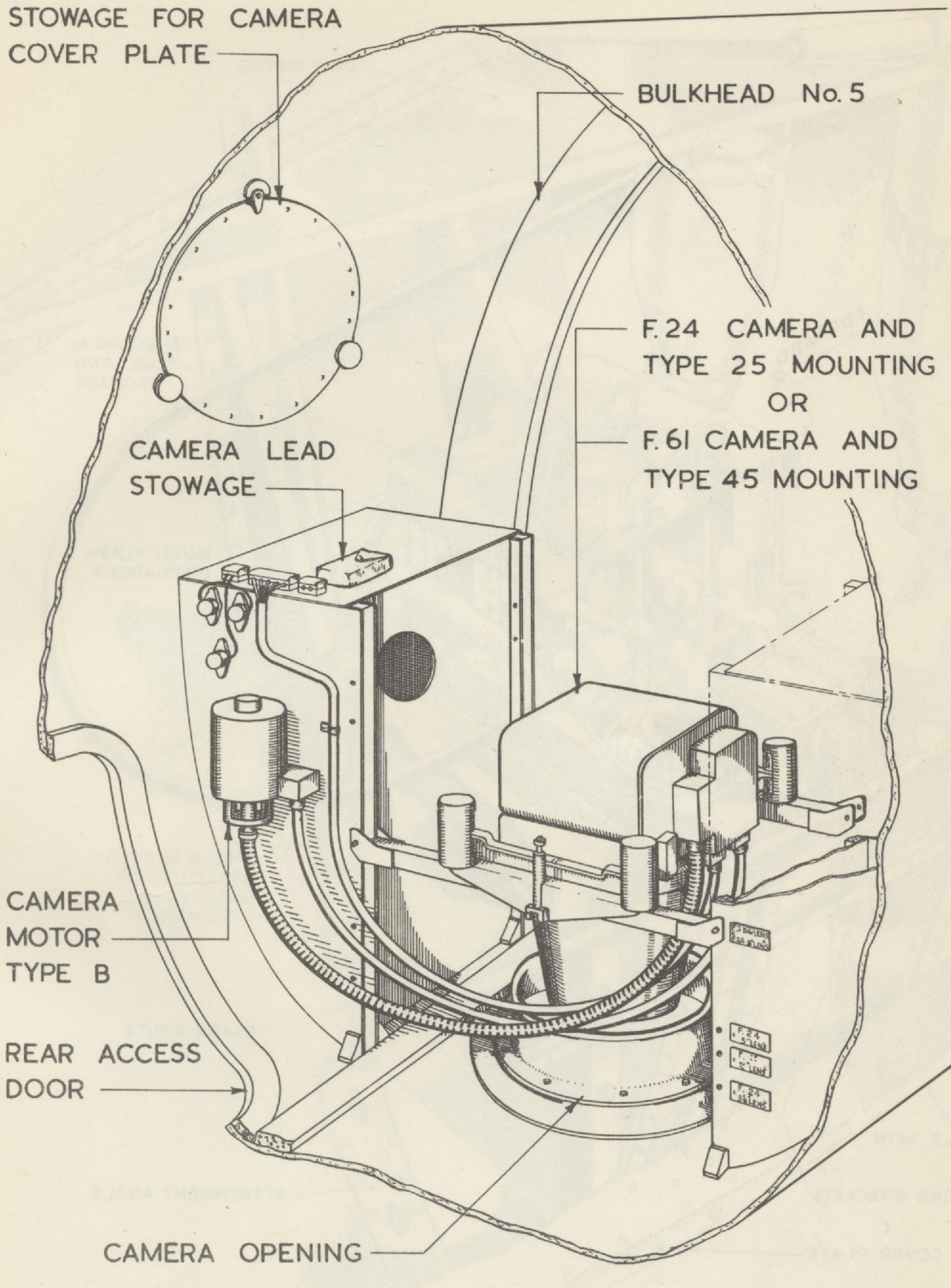

F. 24 CAMERA, WITH 8 INCH LENS, SHOWN INSTALLED ON TYPE 25 MOUNTING

FIG. 13 CAMERA INSTALLATION

7273 61037 12/52 450 C.B.&S.LTD. GP.55

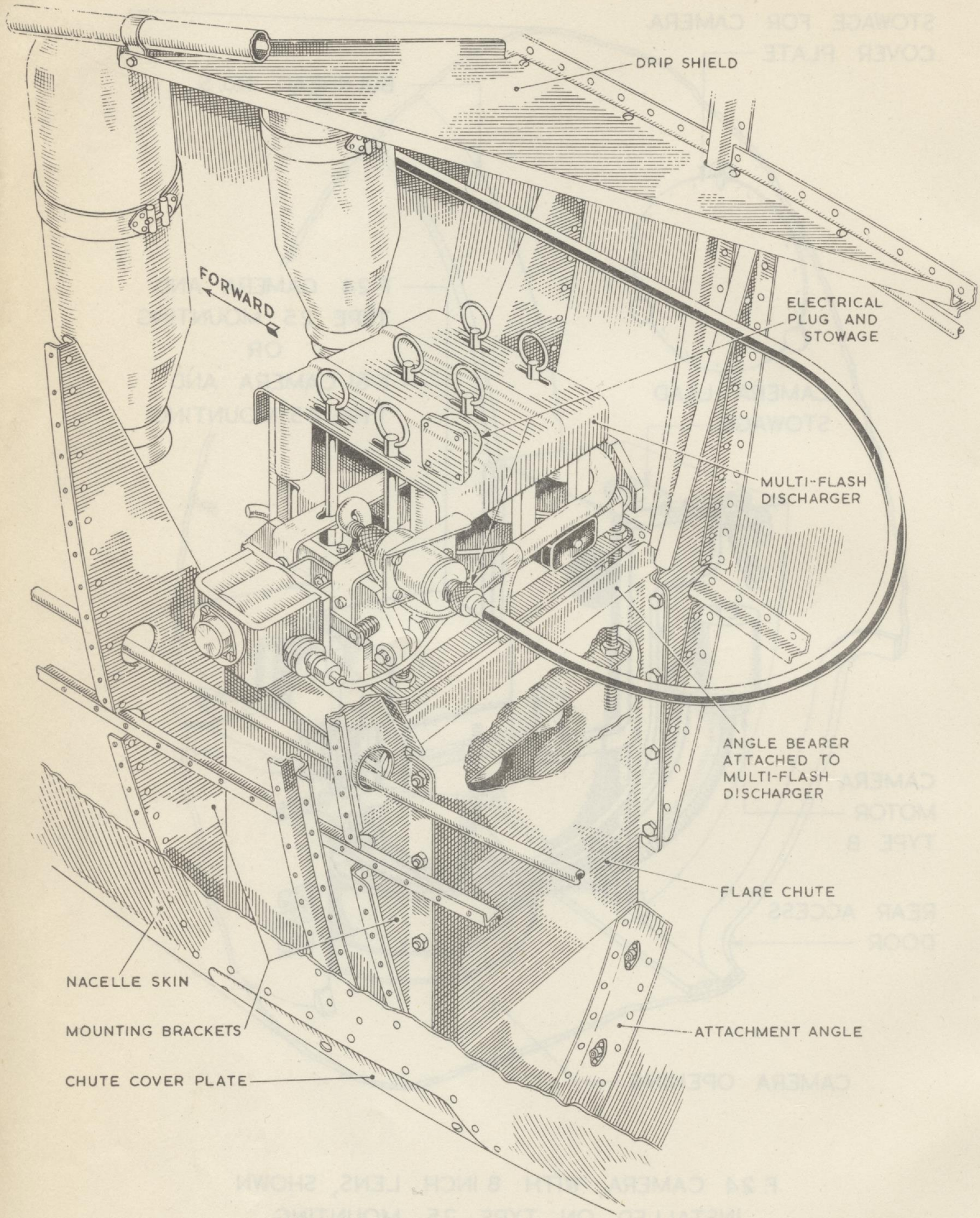

FIG. 14 MULTI-FLASH DISCHARGER

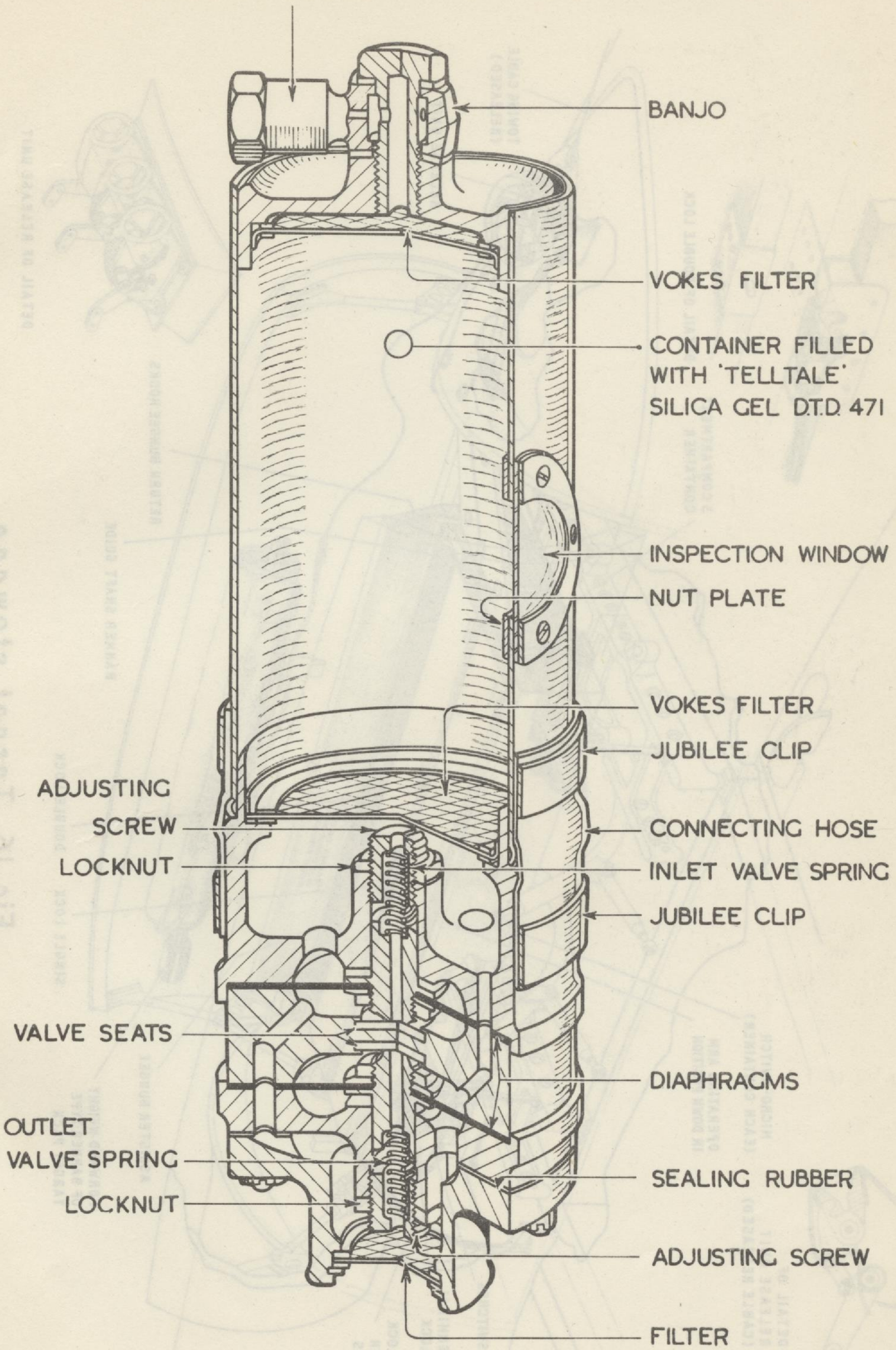

FIG. 15 AIR DRIER

7273 61037 12/52 450 C.B&S.LTD. GP.55

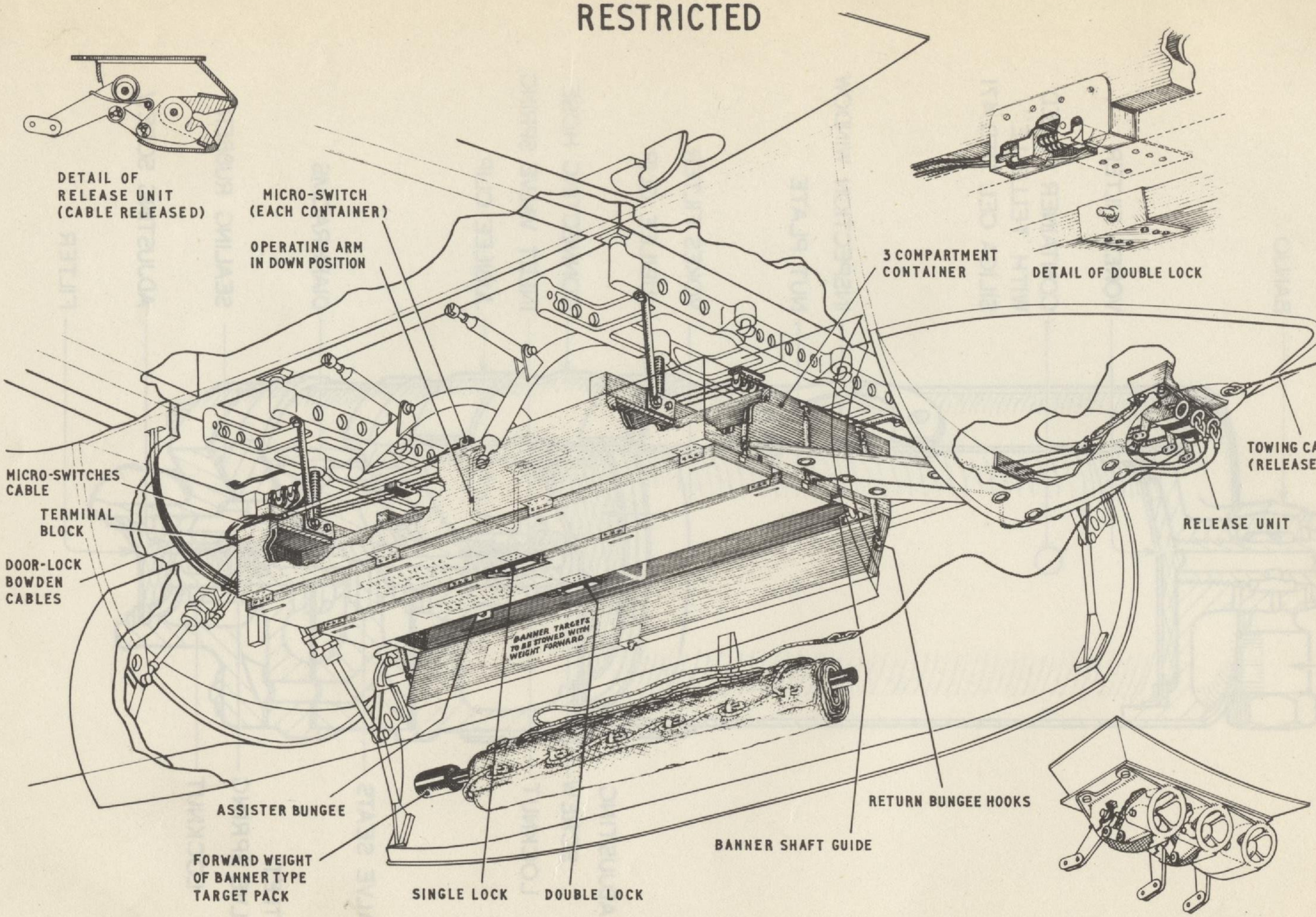

Fig.16. Target stowage

Chapter 3

GENERAL SERVICING

LIST OF CONTENTS

	Para.
Introduction	1
Ground equipment and tools	2
Jacking and trestling	3
Drain holes	4
Lubrication	5
RIGGING	
Rigging sequence	7
Setting the tail plane incidence	8
Checking the tension of the control cables	9
Control settings	
Aileron	10
Aileron trim and balance tabs	11
Aileron flight test corrections	14
Elevator	16
Elevator trim tab	17
Rudder	19
Rudder trim tab	21
Wing flaps	22
ALIGHTING GEAR	
Undercarriage adjustments	24
Checking the radius rod offset and jack pin centre length	25
Adjusting the radius rod offset and jack pin centre length	26
Adjusting the jack travel and UP stops	27
Checking the track of the undercarriage wheels	31
Main wheel shock-absorber unit	33
Dismantling	36
Assembly	37
Tail wheel shock-absorber unit	39
Dismantling	40
Assembly	42
Friction dampers	43
ENGINE INSTALLATION	
Adjusting the engine controls	44
Throttle controls	45
Propeller controls	46
Slow running cut-out controls	48
Supercharger controls	49
Fuel system	51
Fuel cock control setting	52
Cleaning the fuel filters	53
Fuel system venting	
Pressure test	54
Oil system	55
Cleaning the filters	56
Coolant and intercooler systems	58
Radiator flap control	59
HYDRAULIC SYSTEM	
Smoothing unit	62
Servicing trolley	63
Filling	64
Priming	65
Venting	66
Draining and removing components	68
Reservoir and emergency selector valve	69
Hand pump	70
Jacks and flow control valves	71
Faults and remedies	72
Restriction in pipelines	73
Table of hydraulic system faults and remedies	75
Adjusting the UP micro switch	76
Testing operation of the down lock and micro switch	77
Adjusting the alighting gear warning horn switches	78
Port switch	79
Starboard switch	80
Adjusting the bomb door micro switches	81
Checking the jacks for leakage	82
Adjusting the selector valves	83
Flexible hoses	85
Hydraulic pipe connections	86
Re-flaring of pipes	87
Tests	88
Routine tests	
Functional tests	89
Pressure test	91
Special tests	92
Non-return valves	93

LIST OF CONTENTS—*continued*

	Para.
Hand pump	94
Main relief valve	95
Back pressure	96
Selector valve throw-out pressures	97
Buffer unit	98
PNEUMATIC SYSTEM	
Draining	100
Brake pressure gauge	101
Electro-pneumatic rams	102
Testing the system	
Testing equipment required	103
Method of testing	104
Functioning of the supercharger rams	105
Air-intake filter control	106
Air-intake hot and cold air control	107
VACUUM SYSTEM	
Installing the pumps	109
Servicing the system	
Testing	111
Relief valve	112
Checking the system on the port pump	113
Vacuum control cock	114
Dismantling the control cock and valve units	115
Assembling	116
Testing the cock and non-return valves	117
Oxygen system	118
Removal of cylinders	119
MISCELLANEOUS	
Dry air system	120
Testing the drier	121
A.S.I. system	122
Fire-extinguishing system	123
Bonding	124
Bomb winches	
Winch for bombs up to 500 lb.	125
Handle torque load testing	126
Dismantling the gearbox	127
Assembling the gearbox	128
Winches for 4,000 lb. bomb	129
Dismantling the pulley assembly	130
Dismantling the bevel assembly	131
Handles	133
Assembly of winches	134
Testing the winches	135
DINGHY	
Packing the equipment	136
Folding and stowing the dinghy	137
TARGET TOWING EQUIPMENT	
Target launch controls	139
Target release controls	140
Removal of target pack container	141
Removal of release units	142

LIST OF ILLUSTRATIONS

	Fig.
Neutral setting for rudder pedals (para. 21)	1
Undercarriage down lock test tool (para. 84)	2
Vacuum control cock (para. 126)	3
Stowage of dinghy	3A
Trestling for rigging	4
Access panels	5
Location of drain holes	6
Lubrication diagram	7
Lubrication details	8
Rigging diagram	9
Control surface movements	10
Aileron control details	11
Aileron trim and balance controls	12
Aileron and elevator controls in cockpit	13
Jig for rudder and elevator pulleys on bulkhead No. 4	14
Wheel alignment check	15
Assembly of alighting gear	16
Undercarriage adjustments	17
Shock-absorber strut	18
Tail wheel strut assembly	19
Tail wheel strut—dismantling	20
Main wheel hub assembly	21
Engine control rigging	22
Testing fuel venting system	23
Hydraulic system diagram	24
Hydraulic test smoothing unit	25
Alighting gear hydraulics	26
Flaps gear hydraulics	27
Bomb doors—hydraulics	28
Assembly of buffer unit	29
Hydraulic system diagram (Mod. 1443)	29A
Alighting gear hydraulics (Mod. 1443)	29B
Flaps gear hydraulics (Mod. 1443)	29C
Bomb doors hydraulics (Mod. 1443)	29D
Latch mechanism	30
Pneumatic system	31
Pneumatic-hydraulic panel	32
Vacuum system diagram	33
System on pressure side of port vacuum pump	34
System on pressure side of starboard vacuum pump	35
Testing air drier	36
A.S.I. system	37
500 lb. bomb winch	38
2,000 lb. bomb winch	39
Radiator flap control	0
Target towing controls	1

Introduction

1. This chapter describes certain servicing operations and is intended to implement the Servicing Schedule, Vol. 4, Parts 2, 3 and 4. For information and servicing notes on items of equipment not dealt with in this chapter, reference should be made to the relevant publications listed at the beginning of this book.

GROUND EQUIPMENT AND TOOLS

2. The following items of ground equipment, provided for handling and servicing the aircraft, are arranged in two tables as follows :—

Table 1—Special ground equipment (equipment and tools peculiar to this aircraft), and Table 2—Standard ground equipment. These tables contain no items that are normally included in the relevant Appendix "A," nor standard equipment normally provided for purposes not confined to aircraft servicing.

TABLE 1
Special ground equipment

Stores Ref. No.	Part No.	Description	Application
		Towing and steering	
26BY/5006	Z.98264A	Arm, towing, tail wheel	
26BY/5007	G.95186	Towing bridle links	For use with 45 ft. bridle
		Jacking	
26BY/5010	E.98403A	Jack, bipod	Main plane jacking
26BY/5076	Z.98260	Studs	Main plane jacking
26BY/5012	Z.98246A	Former, tail jacking	For tail wheel changing
		Trestling	
26BY/5013	Z.98395A	Former, wing trestle, port	For main plane steadying
26BY/5077	Z.98396A	Former, wing trestle, starboard	For main plane steadying
26BY/5011	Z.98235A	Cradle, tail trestle	
		Erection	
26BY/5028	Z.98391A	Former, wing lifting gantry, port	
26BY/5075	Z.98392A	Former, wing lifting gantry, starboard	
26BY/5015	Z.98236A	Band, tail lifting and anchorage	
26BY/5031	Z.98412A	Sling, with spreader bar	For fuselage and main plane
26BY/13750	Z.982295A	Gantry, with pulley block	For engine changing
26BY/13840	Z.982661A	Sling, power plant	For engine changing
		Rigging	
26BY/17023	Z.983872A	Gauge, incidence, main plane	
26BY/5017	Z.98161A	Gauge, diehedral, main plane	
26BY/5019	Z.98261	Gauge, fuselage levelling	
26BY/5037	Z.98679A	Gauge, incidence, tail plane	
		Transport and salvage	
26BY/5032	Z.98262A	Cradle with wheels	For fuselage
26BY/5033	Z.98262A	Frame, jury	For fuselage
26BY/5034	Z.98254A	Cradle, less wheel	For fuselage
26BY/5030	Z.98257A	Blocks, jacking, emergency	For main planes, in sets of two
26BY/5035	Z.98613A	Cradle, L-H top	For plane transport
26BY/5036	Z.98614A	Cradle, R-H top	For plane transport
26BY/5039	Z.98611A	Cradle, L-H bottom	For plane transport
26BY/5040	Z.98612A	Cradle, R-H bottom	For plane transport
		Miscellaneous	
26BY/5086		Ladder, servicing	
26BY/17300	K.Sketch 1662	Ladder, engine nacelle servicing	
26BY/17444	Z.984137A	Clamps, aileron	For external locking
26BY/17445	Z.98138A	Clamps, elevator	For external locking
26BY/17446	Z98139A	Clamps, rudder	For external locking

TABLE I—*equipment*

Special ground equipment

Stores Ref. No.	Part No.	Description	Application
		Tools	
26BY/13861	Z.98411A, Mk. 1	Jig, setting, port	For aileron differential pulleys
26BY/13865	Z.98411A, Mk. 2	Jig, setting, starboard	
26BY/590	Z.98510A	Jig, setting	For rudder-elevator pulleys in fuselage
26BY/5049	Z.98212	Spanner No. 1	For undercarriage maintenance
26BY/5042	Z.98203	Spanner, No. 2 and 5	
26BY/5043	Z.98204A	Spanner No. 4	
26BY/5045	Z.98206	Spanner No. 6 and 8	
26BY/5047	Z.98210A	Spanner No. 10	
26BY/5048	Z.98211A	Spanner No. 11	
26BY/5041	Z.98114A	Rod assembly	
26BY/16249	Z.984019A	Latch test tool	
26BY/16250	Z.984036A	Spanner box for latch gauge	
26BY/5058	Z.98562A, Mk. 2	Extractor, dowel	For tail wheel unit maintenance
26BY/5054	Z.98541	Spanner, box	
26BY/2869	Z.981450A	Tool, compressor	
26BY/4199	Z.98773A	Tool, sleeve removing	
26BY/5062	Z.98566	Bush- adapter	For undercarriage jack maintenance
26BY/5057	Z.98562	Extractor, dowel	
26BY/5061	Z.98565A	Sleeve, for glands	
26BY/5059	Z.98563	Gauge, centralising	
26BY/5060	Z.98564A	Sleeve, for glands	For tail wheel jack maintenance
26BY/5050	Z.98214	Spanner, C	
26BY/5063	Z.98567A	Sleeve, for glands	For flaps jack maintenance
26BY/5082	Z.98730A	Sleeve, for glands	
26BY/5051	Z.98215	Spanner, C	
26BY/8007	Z.982225A	Smoothing unit, in box	For hydraulic system maintenance
27M/2281	A.I.R.20158	Adapter	
27M/4140	A.I.R.12892	Adapter	
27M/4136	A.I.R.3812	Gauge, pressure testing	
27M/4137	A.I.R.12896	Spanner, bleeder	
27M/4138	A.I.R.12898	Spanner, bleeder	
27M/4139	A.I.R.12900	Plug venting, and tube	
27M/6520	A.T.10169	Cutter valve seat cleaning	
27M/6521	A.T.10170	Cutter, valve seat cleaning	
26BY/5065	Z.98869	Spanner, ring	For fuel system maintenance
26BY/5066	Z.98898	Spanner, pipe adapter	
26BY/5079	Z.98735	Spanner	For wing joints A
26BY/5080	Z.98736	Spanner	
26BY/13869	—	Key, Allen	For 500 lb. bomb winch maintenance
27BY/13870	—	Pliers, Seeger circlip	
26BY/4197	Z.98738	Spanner, tube, clutch engagement	
26BY/5064	Z.98893	Spanner, C	For thermostatic relief valve
26BY/5074	Z.98686	Screwdriver, special	For canopy roof nipples
26BY/5052	Z.98539A	Tool, bolt extractor	For engine mounting bolts

TABLE 2

Standard ground equipment

Stores Ref. No.	Description	Application
	Towing and steering	
4G /–	Bridle, towing, 45 ft.	
	Jacking	
4Q /2293	Jack, 10 ton, hydraulic body	For main plane jacking and main wheel changing
4Q /2295	Trestles, Mk. 2	
4Q /2299	Adapter, Mk. 18	
4Q /1229	Jack, 4 ton, hydraulic	For use with tail jacking former, Stores Ref. 26BY /5012
	Trestling	
4G /–	Trestle, universal, No. 10	For use with tail cradle, Stores Ref. 26BY /5011
4G /–	Trestle, universal, No. 12	For use with formers, Stores Ref. 26BY /5013 and 5077
	Miscellaneous	
4G /2268	Sling, aero-engine	
40B /474	Stands P.P. type D	
40B /371	Adapters, No. 12	
40B /475	Backplate, type A, No. 1	
4G /1	Stands, engine erecting	
4G /2176	Adapters, type A	
4G /2421	Modification sets	

Jacking and trestling

3. Jacking of the aircraft is illustrated in Sect. 4, Chap. 2, and trestling for rigging is shown in fig. 4 of this chapter.

Drain holes (*fig. 6*)

4. It is essential that all drain holes are kept open, as it is important that no water should be allowed to accumulate in any part of the aircraft. When any panels are removed from the wing, the opportunity should be taken to check drain holes, particularly in the double top skin, and spar webs, which are otherwise inaccessible.

Lubrication (*fig. 7 and 8*)

5. For the position of the lubrication points and types of lubricant used, refer to the illustrations. All sealed ball bearings (flap and aileron hinges) are packed with low temperature grease before assembly and need no further lubrication.

RIGGING

6. The wing, fin and tail plane are fixed cantilever structures and, except for the tail plane incidence (*para.* 8), are not provided with means of adjustment.

The only rigging operations therefore, are those concerned with checking diagonal measurements, the incidence and dihedral of the wing and tail unit, and with control surface settings and ranges of movement. The positions on which the dihedral and incidence boards should be placed are painted on the wing and tail plane surfaces.

RIGGING SEQUENCE (*fig.* 9)

7. The sequence of operations is as follows :—

(1) Trestle the aircraft under the wing and the rear of the fuselage (*fig.* 4).

(2) Place the straight-edge, Stores Ref. 26BY/5019, transversely on the datum blocks aft of bulkhead No. 4 in the fuselage. Adjust the wing trestles until the reading on the straight-edge is zero. Using the datum blocks for longitudinal level in a similar manner, adjust the tail trestle until the reading on the straight-edge is zero.

(3) Check the wing incidence at ribs No. 2 and 10 using incidence board, Stores Ref. 26BY/17023. Check the dihedral on top of the front spar, by means of the board, Stores Ref. 26BY/5017.

(4) Check the tail plane incidence with the incidence board, Stores Ref. 26BY/5037 ; also check that the tail plane is horizontal transversely and that the fin is vertical. For the actual setting of the tail plane refer to the Airframe Log Card.

(5) Check for symmetry between the wing, fuselage, tail plane, undercarriage and engines by taking diagonal measurements.

Setting the tail plane incidence

8. The angle of incidence of the tail plane may be set by the adjustable support tubes connecting the tail plane rear spar to the fuselage rear bulkhead (*Sect.* 7. *Chap.* 3) and should be carried out as follows :—

(1) With the aircraft trestled in the rigging position (*para.* 6), remove the tail fairing (*Sect.* 5).

(2) Slacken the lock-nuts on the support tube adjustable ends.

(3) Place the incidence board in position and adjust the top and bottom support tubes, turning each adjuster an equal amount. Adjust by a quarter of a turn only, which is equivalent to 10 minutes on the clinometer.

(4) Tighten the lock-nut and refit the tail fairing.

Note . . .

The angle of incidence of the tail plane is critical, and when making checks or adjustments, reference should be made to the Airframe Log Card in which the correct setting is recorded.

IMPORTANT. After setting the tail plane incidence, a flight test must be effected in accordance with the current Mosquito flight test procedure for tail plane check.

As a result of these flight tests, a new tail plane may require setting at an angle slightly different from that of the tail plane originally fitted, but this new setting should not exceed $\pm$ 1 deg. variation from the nominal zero setting. The new setting, together with the corresponding tail plane serial number, must be recorded in the Airframe Log Card.

Checking the tension of the control cables

9. The correct tension of the control cables is important and the following information is given to enable checks to be made. The equipment required will be Mk. 4 and Mk. 5 tensiometers. Lock the control column and rudder pedals with the control locking device. The cable to be checked should be passed under the fixed pulleys and over the centre pulley of the tensiometer. When checking the cable tension, run the tensiometer along the cable for a few inches before taking a reading. After adjusting the cables, a check must be made to ensure that the control surface setting has not changed and is in the correct position relative to the cockpit control. The tension of the various control cables is measured at the rear of the bomb bay and in the fuselage, opposite the rear entry door. On aircraft incorporating Mod. 1619 and Mod. 1627 the tension of the tail guard cable must also be checked. The cable size, cable tension and limits are given in the following table :—

TABLE 3

Tension of cables

Cables	Cable size (cwt.)	Cable tension (lb.)	Limits (1) + ve	Limits (1) — ve	Limits (2) + ve	Limits (2) — ve
Rudder control (bomb bay)	25	100	40	40	20	20
Elevator control (bomb bay)	25	100	40	40	20	20
*Aileron control (bomb bay)	25	70	30	30	20	20
Rudder control (rear fuselage)	25	100	40	40	20	20
Elevator control (rear fuselage)	25	100	40	40	20	20
*Tail guard	10	25	10	10	55	

*This measurement must be made with a Mk. 4 tensiometer and the figures given are read off the 20 cwt. scale. All other tensions should be read off the 25 cwt. scale on a Mk. 5 tensiometer.

Note . . .

Limits (1) *is effective up to the first minor servicing to allow for the cables " settling down." On and after this period limit* (2) *applies.*

CONTROL SETTINGS

Aileron (*fig. 13*)

10. Using the control locking device, Stores Ref. 26BY/2918, lock the control column neutral, i.e., 5 deg. aft of vertical, and proceed as follows :—

(1) With the W hand grip neutral, adjust the control column, swaged rods so that the major axis of the bottom sprocket is at right angles to the control column and there is an equal length of chain on each side of the top and bottom sprockets.

(2) Check that the pulley at the aft end of the aileron torque tube is neutral.

(3) Set the aileron differential pulleys neutral (*fig.* 11) using locking jigs Stores Ref. 26BY/13861 (port) and 13865 (starboard).

(4) Couple up the control cables. The cable runs and adjusting points are shown in Sect. 7, Chap. 4.

(5) With the ailerons assembled to the hinges, join the connecting rod from the differential pulleys to the ailerons and adjust the lengths so that the trailing edge of each aileron is $\frac{1}{4}$ in. below the wing trailing edge.

(6) Remove the control column locking device and the aileron differential locking jigs.

(7) Move the control column hand grip over its full range of travel. The movement should be smooth and free ; check that the tension of the chains is satisfactory throughout the full range of movement.

(8) Check the cable tension with a Mk. 4 tensiometer (*para.* 9).

Note . . .

The gap between the aileron leading edge and the shroud on the wing should be $0{\cdot}16 \pm 0{\cdot}04$ *in. Adjustment is made by altering the laminum shims between the upper and lower surfaces of the hinge brackets and the inner faces of the aileron hinge forks.*

Aileron trim and balance tabs (*fig. 12*)

11. With the ailerons locked in the neutral position, proceed as follows :—

(1) Set the aileron trim control in the cockpit at NEUTRAL.

(2) Set the aileron tab jack ram, in the port wing, neutral and arrange an equal length of chain on each side of the jack sprocket. Connect and adjust the control cables (*Sect.* 7, *Chap.* 4).

(3) Adjust the port link lever neutral by adjusting the tab jack connecting rod, and set the tab neutral by adjusting the link-to-tab connecting rod.

(4) With the aileron neutral, check the port tab for full, correct and free travel (*fig.* 10), using the trim tab

control in the cockpit. Turning clockwise from neutral move the tab up.

(5) Check that a minimum clearance of $\frac{1}{8}$ in. is maintained between the tab shroud and the tab, particularly when the tab is in the down position.

(6) With the aileron neutral, set the starboard aileron tab neutral. Adjust the connecting rod for length as necessary and couple it up to the tab.

Note . . .

(*a*) *If the aircraft flies out of lateral trim with the trim control at* NEUTRAL, *the setting of the differential pulleys should be checked* (*fig.* 11). *If the settings are correct, check the gap between the ailerons and their shrouds and if necessary adjust it* (*Note at end of para.* 10).

(*b*) *When fitting a new aileron, reference should be made to the Airframe Log Card for the setting of the balance tab connecting rod on the link lever*

12. Usually it will be found that having rigged the aileron tabs, it will be necessary to set the cockpit trim control on the control indicator, one or two divisions either way, to obtain the correct lateral trim in flight. When this setting has been made, the indicator should be adjusted to read NEUTRAL by the following method without altering the setting of the tab or controls.

(1) Remove the centre nut on the hand wheel spindle and withdraw the hand wheel.

(2) Unscrew the nuts from the fixing bolts on the panel and remove the indicator back plate without moving the front plate.

(3) Push the centre spindle and gear wheel backwards just out of engagement, set the indicator pointer to read NEUTRAL and re-mesh the gear wheel. The chain and sprocket positions must not alter during this operation.

(4) Re-assemble the back plate and hand wheel and replace and tighten the nuts.

13. Should more than two divisions on the indicator be required to trim the aircraft, the necessary additional adjustment must be made to the starboard aileron tab, by means of the adjustable connecting rod. Right wing low is corrected by setting the starboard tab up, and vice versa.

Aileron flight test corrections

14. In all conditions of flight, i.e., full throttle, climbing, diving and cruising, the aircraft must fly level laterally without alteration of trim and the aileron controls should be neither too heavy nor too light. The "feel" of the aileron controls becomes lighter as speed is reduced and therefore, to avoid the possibility of the ailerons becoming overbalanced and taking charge at low approach speeds, it may be necessary to rig the ailerons slightly heavy at high speed as a measure of safety.

15. If the aircraft will not fly laterally level at all speeds without alteration to trim, examine the ailerons to see that the top of the leading edge nose section is not above the wing profile, nor the trailing edge warped, then measure the shroud gap (*Note at end of para.* 10). If these points are correct, adjustments should be made to the ailerons as follows :—

TABLE 4

Table of aileron faults and remedies

Symptoms	Remedy
(1) Port wing low in a dive when level in normal flight	(a) Move the port aileron down by adjusting the shims at the hinges. (b) If (a) is insufficient, also move the starboard aileron up, by adjusting the shims at the hinges. (c) If still not satisfactory, check the alignment of the hinges. (d) If the wing is still low, change the ailerons.
(2) Starboard wing low in a dive when level in normal flight	(a) Move the starboard aileron down by adjusting the shims at the hinges. (b) If (a) is insufficient, also move the port aileron up, by adjusting the shims at the hinges. (c) If still not satisfactory, check the alignment of the hinges. (d) If the wing is still low, change the ailerons.

TABLE 4—*continued*

Table of aileron faults and remedies

Symptoms	Remedy
(3) Aileron control heavy	(a) Check the settings of the differential pulleys (*fig.* 11). (b) Check the $\frac{1}{4}$ in. droop of the ailerons and ensure that the tabs are in line with the ailerons. (c) Move the tab con-rods up on the links to the same extent on both ailerons ; the extent will be dependent on the amount of heaviness reported. At the same time, if the rod is moved from the rear row of holes on the link to the next higher hole in the front row, the rod must be lengthened by unscrewing the con-rod $2\frac{3}{4}$ turns (check that the threads are in safety), thereby keeping the same relative tab position. Similarly, if the rod is moved from the front row of holes to the next higher hole in the rear row, the rod must be shortened by $2\frac{3}{4}$ turns. **Note . . .** *The con-rods setting in the links must be recorded in the Airframe Log Card.* (d) If a finer adjustment is required than that given in (c), the droop on both ailerons may be reduced to a minimum of $\frac{1}{8}$ in. by adjusting the differential control rods.
(4) Aileron control light	(a) Check the settings of the differential pulleys (*fig.* 11). (b) Check the $\frac{1}{4}$ in. droop on the ailerons and that the tabs are in line with the ailerons. (c) Move the tab con-rods down to the same extent on both ailerons ; the extent will be dependent on the amount of lightness reported. The adjustment of the rods when moved from one row of holes to the other is described for symptom (3), remedy (c). **Note . . .** *The con-rods setting in the links must be recorded in the Airframe Log Card.* (d) If a finer adjustment is required than that given in (c), the droop on both ailerons may be increased to a maximum of $\frac{3}{8}$ in. by adjusting the differential control rods.
(5) Port wing low in normal flight	(a) Check the settings of the differential pulleys (*fig.* 11). (b) Trim the port tab up by shortening the tab connecting rod. **Note . . .** *As an approximation, one half-turn on the con-rod is the equivalent of one division on the trim indicator in the cockpit.*
(6) Starboard wing low in normal flight	(a) Check the settings of the differential pulleys (*fig.* 11). (b) Trim the starboard tab up by shortening the tab connecting rod.
(7) Starboard wing low in a dive, with the port wing low in normal flight	It is important to correct for the dive case first. (a) Correct as for symptom (2). (b) If normal flight still gives port wing low, correct as for symptom (5).

Elevator (*fig.* 9)

16. With the control column locked in the neutral position :—

(1) Using the locking jig, Stores Ref. 26BY/5090, lock the elevator differential pulley at bulkhead No. 4 in the neutral position (*fig.* 14).

(2) Set the elevator neutral and adjust the cables between the elevator and the differential pulley at bulkhead No. 4.

(3) Adjust the cables between the outboard elevator pulley at bulkhead No. 4 and the elevator pulley in the cockpit, until the cockpit layshaft is in the neutral position.

(4) Adjust the length of the control column connecting rod as necessary and connect the control column to the layshaft lever.

(5) Remove the elevator pulley locking jig and release the control column, then check for free movement through the full range (*fig.* 10).

(6) Check the tension of the cables with a Mk. 5 tensiometer (*para.* 9).

Elevator trim tab

17. With the elevator retained in its neutral position :—

(1) Set the elevator tab control in the cockpit so that the indicator reads neutral.

(2) Set the tab jack on the tail plane rear spar to neutral.

(3) Ensure that there is an equal length of chain on each side of the tab jack sprocket and that an equal length of Teleflex cable projects from each conduit, then adjust the control cables without altering the relative positions of the sprockets.

(4) Adjust the tab connecting rods until the tabs are in line with the elevator trailing edge.

(5) With the elevator neutral, operate the cockpit control wheel and check for full, correct and free tab movement (*fig.* 10).

Note . . .

(*a*) *The elevator tabs should move upwards when the cockpit wheel is rotated forward.*

(*b*) *It may be necessary to rig the tab slightly out of neutral in relation to the elevator. To do this, adjustment should be made at the tab connecting rods only.*

18. With the correct tail plane setting and normal operating C.G. position, the aircraft should be in fore-and-aft trim under cruising conditions when the elevator trim tab cockpit indicator is between NEUTRAL and one division forward of NEUTRAL. If this is not so, adjust the indicator pointer as follows :—

(1) Mark the position of the indicator pointer which gives the correct trim.

(2) Check the angle of the trim tab at this pointer setting.

(3) Move the trim control until the indicator is between NEUTRAL and one division forward.

(4) Adjust the tab connecting rods until the tabs are in the position checked in (2) above.

Rudder

19. Using the locking spool (Stores Ref. 26BY/5097) set the rudder pedals neutral and proceed as follows :—

(1) Set the rudder pulley at bulkhead No. 4 neutral with the jig. Stores Ref. 26BY/5090 (*fig.* 14).

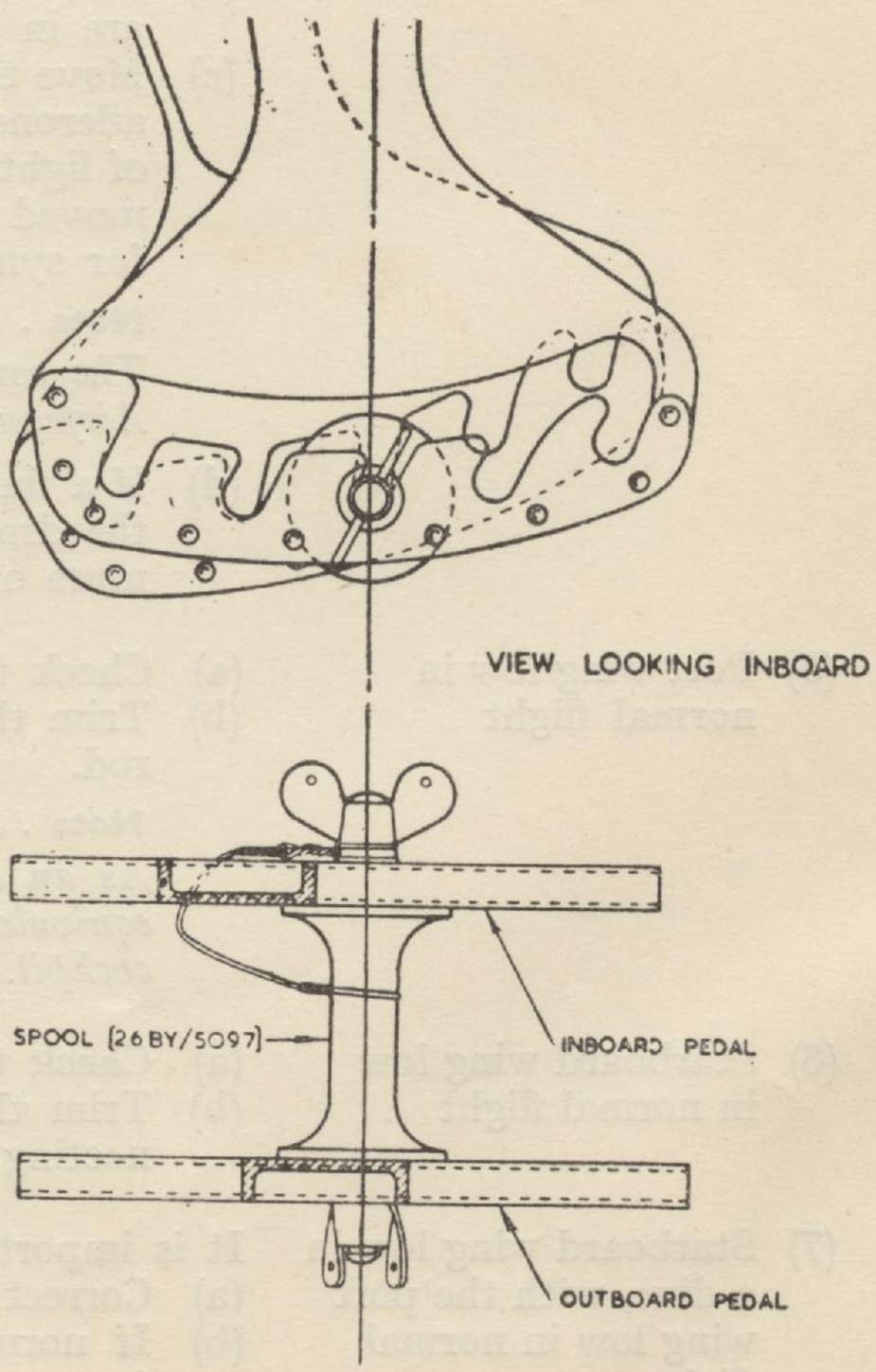

Fig. 1. Neutral setting for rudder pedals

(2) Adjust the cables, connecting the rudder pedals to the outboard rudder pulley at bulkhead No. 4, to an equal tension.

(3) Adjust the cables, between the inboard rudder pulley at bulkhead No. 4 and the lever on bulkhead No. 6, until the cable bolt centres on the lever are equidistant from the bulkhead.

(4) Adjust the length of the rudder spring strut to bring the rudder to its neutral position.

(5) Remove the locking jig from the pulley at bulkhead No. 4 and the locking spool from the rudder pedals.

(6) Check for full, correct and free rudder movement (*fig.* 10).

(7) Check the tension of the cables with a tensiometer Mk. 5 (*para.* 9).

20. To test that the rudder spring strut is functioning correctly :—

(1) Push the port rudder pedal fully forward and hold it firmly in that position.

(2) Move the rudder towards the neutral position until the spring strut butts against its stop. The spring strut should have been compressed 0·9 in.

(3) Repeat the operation with the starboard pedals fully forward ; the spring strut should extend 0·9 in.

Note . . .

The 0·9 in. dimension can be measured where the outer casing slides over the adjustable end of the spring strut.

Rudder trim tab

21. With the rudder locked in neutral, set the trim tab control in the cockpit at NEUTRAL, and proceed as follows :—

(1) Check that the two lengths of Teleflex cable protruding from the guide tubes, just aft of bulkhead No. 4 (port side), are equal to within ± 0·1 in.

(2) Set the jack drum so that there are four turns of the cable on each side of the centre of the drum and adjust the control cables to an equal tension without altering the setting of the cable drum or cockpit control.

(3) Check the neutral setting of the jack. The jack is in the neutral position when the fork bolt attaching the jack to the link is in line with the centre of the rudder bottom hinge bolt.

(4) Adjust the tab connecting rod to align the tab with the rudder.

(5) With the rudder neutral, check the trim tab for full, correct and free travel, and when the rudder is moved to compress the spring strut as in the test in para. 20, check the range of the additional movement given to the tab (*fig.* 10).

Wing flaps

22. The angular movement is given in fig. 10 ; for details of assembly and adjustment refer to Sect. 5.

ALIGHTING GEAR

23. All moving parts of the undercarriage and tail wheel units should be kept clean and properly lubricated. The ground safety locking caps must always be fitted to the undercarriage jacks when any maintenance work on the aircraft is being done, but must be removed to enable retraction tests to be made.

UNDERCARRIAGE ADJUSTMENTS

24. When adjusting the undercarriage retracting mechanism, the following order of operations must be strictly adhered to:—

(1) Adjust the radius rod offset (*para.* 26).

(2) With the jack extended, adjust the pin centres (*para.* 26).

(3) Adjust the jack travel (*para.* 27).

(4) Adjust the rubber UP stops (*para.* 27).

(5) Check the track of the undercarriage wheels (*para.* 31).

Checking the radius rod offset and jack pin centre length (*fig. 17*)

25. Proceed as follows :—

(1) Jack the aircraft so that the wheels are clear of the ground. Ensure that the undercarriage is locked DOWN and the undercarriage selector lever is at neutral.

(2) Stretch a length of threads through the centres of the end fittings of the starboard radius rod.

(3) Disconnect the latch spring, and apply light downward manual pressure to

the radius rod centre joint, to ensure that the adjustable stop faces are in contact. If there are signs that these faces are sprung apart by the setting of the port radius-rod stop, screw in the latter sufficiently to avoid this.

(4) The centre hinge bolt C should be 0·5 in. below the line of the thread. With upward pressure at the same point, bolt C should not be less than 0·4 in. below the line of the thread. In both instances it should be possible to rotate the jack ram bolt B without the aid of a spanner.

(5) Set the undercarriage selector lever at DOWN. Then, under hand pump operation, bolt B should become tight when the jack ram has extended approximately $\frac{1}{64}$ in.

(6) Stretch a length of thread along the port radius rod and check that with the stop faces in contact, the offset of the centre hinge bolt is 0·5 in.

Adjusting the radius rod offset and jack pin centre length (*fig. 17*)

26. Should adjustment be necessary, proceed as follows :—

(1) Screw in the stop on the port radius rod until the stop faces are clear. After ensuring that the jack ram down lock has engaged, set the undercarriage selector lever at neutral.

(2) Disconnect the radius-rod latch spring and swing the latch forward. Slacken the ram lock-nut No. 6 with spanner No. 6.

(3) Adjust the stop on the starboard radius rod until 0·5 in. offset is obtained, with the stop faces in contact ; tighten the stop lock-nut. Should the bolt B become tight during this operation, rotate the ram shaft with spanner No. 7 to shorten the jack pin centre length sufficiently to free the bolt, and re-check the offset.

(4) Exert pressure with a wood block against the ram end fitting to ensure that the ram is pushed hard against the downlock face inside the jack.

(5) With spanner No. 7, rotate the ram shaft so as to lengthen it, until bolt B begins to get tight, then rotate the shaft a $\frac{1}{4}$ turn in the opposite direction. Tighten lock-nut No. 6.

(6) Re-adjust the port radius rod stop to give the correct offset, then tighten the lock-nut.

(7) Partially retract the undercarriage, then lower it fully and re-check the items in para. 25 (4), and (5).

(8) Re-attach the latch spring.

Note . . .

It is desirable that the tolerance at the stops should be within 0·006 *in., but after the aircraft has been in service, a maximum tolerance of* 0·01 *in. is permissible.*

Adjusting the jack travel and UP stops

27. Proceed as follows :—

(1) Jack the aircraft to clear the wheels from the ground.

(2) Disconnect the door operating cables from the radius rod cross tube.

(3) Remove the wheel and substitute an axle to which weights are attached (*fig.* 16) and tighten the axle cap bolts (total weight required is 214 lb.).

(4) Screw the UP stops fully upward.

(5) Ensure that the jack ram stop sleeve face and the face of the jack end fittings are perfectly clean ; slacken the ram stop lock-nut with spanner No. 8.

(6) Retract the undercarriage, using the hand pump, and adjust the ram stop sleeve so that it butts against the jack end fitting when the face of the radius-rod latch is 0·15 in. above the face of the lock bracket. Tighten the ram stop lock-nut with spanner No. 8. The UP latch should have an override of 0·15 in. and a lateral engagement of 0·85 in. with the lock bracket. Great care must be exercised during adjustment—a quarter of a turn at a time. It is essential to check that the override is not being restricted by the rubber block attached to the UP stop bolts, or the ram sleeve, both before and after making the adjustment.

(7) Allow the undercarriage to drop 0·15 in., i.e., until it is supported by the UP lock, by returning the undercarriage selector lever to neutral.

(8) Screw the UP stops downwards until a clearance of 0·1 in. is obtained between each stop and the radius rod fittings. Tighten the stop lock-nuts.

(9) Re-assemble the wheel and the door operating cables, and carry out one cycle of operations by hand pump and three by test rig.

Note . . .

The undercarriage jack must never be fully retracted unless lock-nut No. 6 *is tight.*

28. A routine check can be made to see that the UP lock catch is 0·15 in. above the lock bracket, as follows :—

(1) Place a 6 in. rule across the opening over the UP lock bracket and with another rule set vertical by resting it on the top of the latch, measure the distance against the rule lying flat.

(2) With the selector lever in the UP position, operate the hand pump until the jack comes up against its stop, and with the rule in a vertical position, measure the distance against the rule across the opening. The difference should be 0·15 in.

29. IMPORTANT. After assembly it is important that, before the undercarriage is retracted, either by hand pump or test rig, the UP rubber stops are screwed fully upwards, and the jack stop sleeve so adjusted that it butts against the jack end fitting before contact is made at the rubber stops. Thus, the stop sleeve should be adjusted progressively until the correct UP latch clearance is obtained, the rubber stops being adjusted last. The jack ram length should be adjusted by commencing with the ram too short, the eye being progressively screwed outwards until the correct length is obtained. *If this procedure is not followed, excessive loads may be applied which may bend the ram bolt B.*

30. When fitting a new hydraulic jack :—

(1) Having attached the top end of the jack and coupled up the pipelines, extend the jack fully, then press it up against the "down" lock face (*para.* 26 (4)).

(2) Adjust the length of the ram shaft at the screwed end, so that bolt B can be inserted through the eye-end and the latch assembly, with the radius rod adjusted to the correct offset; then proceed as in para. 26 (5).

Checking the track of the undercarriage wheels (*fig. 15*)

31. To check the alignment of the undercarriage wheels, the adjustment of the top structure must first be checked. This may be done when the engine mounting and firewall are removed, by using the fixture jig, Part No. 12955. If this jig is not available, the following procedure may be adopted when the engine is removed :—

(1) Trestle the aircraft and adjust for fore-and-aft level.

(2) Set the top structure by using a clinometer and adjusting the struts until an angle of $4\frac{1}{2}$ deg. $\pm$ 4 min. is obtained. Alternatively, a check may be made with the engines installed, by first taking the weight of the engines off the top structures and using plumb-lines to check that the dimension 3·2 $\pm$ 0·03 in. is obtained.

32. To adjust the undercarriage track :—

(1) Check the radius rod offset (*para.* 25).

(2) Check the trammelled dimension 64·97 in. at both the inboard and outboard hinges.

(3) Check the outboard fitting dimension 7·06 in. at the rear spar.

(4) If the inboard dimension is other than 64·97 in., adjust by means of shims behind the fitting on the rear spar. The outboard fitting should be treated in a similar manner to maintain the 7·06 in. dimension.

(5) Check the 16 ft. 4 in. wheel centre dimension.

MAIN WHEEL SHOCK-ABSORBER UNIT

33. The main wheel shock-absorber unit is of the rubber-in-compression type and is not adjustable. In the course of time the main and rebound rubbers will deteriorate, and it is important that a periodic check be made of the piston tube extension length under static and no load conditions.

34. The following dimensions are the minimum permissible :—

Aircraft on ground load in lb.	*Extension length*
(a) 20,500	1·7 in.
(b) 19,500	1·9 in.
(c) 18,500	2·1 in.
(d) 17,000	2·4 in.
(e) 16,000	2·6 in.
(f) 15,000	2·8 in.
(g) 14,000	3·0 in.
(h) Aircraft jacked up, wheels off ground	8·0 $\pm$ 0·1 in.

Before checking any extensions as in items (a) to (g), rock the aircraft laterally to obviate false readings due to friction. Conditions (a) to (g) affect the main rubbers, and (h) the rebound rubbers. Replacements should be made if the dimensions are appreciably less than the minimum stated.

35. If the rubbers begin to show signs of deterioration and the piston tube extension length is only slightly less than that given in para. 34, the half size rubber, Stores Ref. 26BY/648, should be replaced by a full size rubber, Stores Ref. 26BY/619. If, after one or two landings, the extension length is still below the minimum, another half rubber, with a spacer plate, may be added.

Dismantling (*fig. 18*)

36. To dismantle the shock absorber strut for replacement of rubbers :—

(1) Screw the assembly rod, Stores Ref. 26BY/5041, in the top of the piston and compress the rubbers by tightening the nut on the top of the assembly rod. This takes the initial compression load off the bottom casing bolts.

(2) Remove the sixteen bolts from the bottom of the casing.

(3) Detach the nut and distance tube from the top of the assembly rod and expose the piston assembly, complete with rubbers and assembly rod, by withdrawing the outer casing.

Assembly (*fig. 18*)

37. (1) With the assembly rod screwed into the piston and the rubbers and spacer plates assembled on it, slide the outer casing over the rubbers until the rod protrudes through the top of the casing.

(2) With the distance tube, washer and nut fitted to the top of the assembly rod, tighten the nut until the bolt holes in the piston guide block line up with those in the outer casing.

(3) Bolt the piston guide block to the outer casing, ensuring that the short bolts are in the correct position. Lock the bolts with 18 s.w.g. galvanised iron wire.

(4) Slacken the nut at the top of the assembly rod and unscrew the rod from the piston.

Note . . .

On assembly, the rubbers should be generously dusted with dry powdered graphite.

38. To replace a rebound rubber :—

(1) Refer to para. 36 for dismantling the shock-absorber unit.

(2) Remove the ferrules and tie-rods which hold the piston to the tube, and remove the piston.

(3) Renew the rebound rubber.

(4) Refit the piston to the tube.

(5) Refer to para. 37 for assembly instructions.

TAIL WHEEL SHOCK-ABSORBER UNIT

39. The tail wheel shock-absorber unit is of the compression rubber type. The wheel is fully castering, but when the aircraft is off the ground the wheel returns to a fore-and-aft position by a self-centring device. The unit also has friction dampers on each side of the fork at the fork hinge.

Dismantling (*fig. 19*)

40. To dismantle the strut for renewing compression rubbers :—

(1) Remove the tail wheel unit (*Sect.* 5).

(2) Detach the tail wheel fork from the strut as follows :—
  (a) Withdraw bolt Q and disengage the link.
  (b) Remove the split pin and the slotted nut P from both ends of the hinge shaft S.
  (c) Remove the outer plates, rubber rings, friction plates and the friction discs.
  (d) Remove the two bolts O.
  (e) Lightly tap out the hinge shaft S, and lower the fork.

(3) Place the strut between screw clamp, Stores Ref. 26BY/2869, and screw up to take the 2,000 lb. initial compression of the rubbers (*fig.* 20).

(4) Unscrew the bolts M near the hinge and remove the dowel pin strap.

(5) Withdraw the five dowel pins M with the extractor, Stores Ref. 26BY/5058.

(6) Unscrew the clamp and remove the strut. Withdraw the bearing block, rebound rubber block D, piston E, rubber blocks C and the separator plates.

(7) Compress the remaining three rubber blocks and remove bolt T.

(8) Slide the inner sleeve out with tool, Stores Ref. 26BY/4199, release the compression on the remaining rubbers and remove them.

41. If it is necessary to examine the self-centring cam or the ball bearing thrust race L, the cylinder B will have to be removed. With box spanner, Stores Ref. 26BY/5054, remove lock-nut U, and with the same tool unscrew bolt R from the top plate K. There is a powerful self-centring spring at the top of the strut and, when removing bolt R, ensure that cylinder B is carefully released from outer casing A as the bolt disengages from the top plate K. Then slide cylinder B from outer casing A, taking care to catch the 122 needle rollers G. The spring and self-centring cam will then be free.

Assembly (*fig. 19*)

42. The process of assembling the strut is mainly a reversal of the dismantling instructions. When assembling the self-centring spring and cam, adopt the following procedure :—

(1) Place the outer casing in a vice (*fig.* 20).

(2) Insert the thrust race L into the outer casing, getting it as near the centre as possible (use a little grease to hold it in position), and finally centralise it by assembling the cylinder B. Remove the cylinder.

(3) Assemble the spring and cam. Arrange the slot on the cam to align with the key in the casting.

(4) With the needle rollers in position, assemble cylinder B so that the cam rollers fit into the trough of the cam without moving the cam. Assemble bolt R as a guide for the cam.

(5) Place a 15 cwt. cable loop round the end of the vice and, with a 4 ft. length of bar, slip one end into the loop and lever the cylinder into the outer casing A, at the same time feeling the cam on to the key.

(6) With spanner Stores Ref. 26BY/5054, screw bolt R into cylinder B until it is tight.

(7) Fit and tighten lock-nut U.

Note . . .

When assembling the needle rollers pack the race with grease XG-275 (Stores *Ref.* 34B/222) *and bury the rollers.*

Friction dampers (*fig. 19*)

43. To adjust the friction dampers :—

(1) Adjust the slotted nuts P until the outer plates can be just turned by hand.

(2) Tighten each nut two-and-a-half turns and secure with split pins.

Note . . .

Damping may be poor until the friction discs have bedded in, and the nuts P should not be re-tightened until after a reasonable number of landings. Over tightening may result in shearing bolts O, and faulty tail wheel retraction.

ENGINE INSTALLATION

ADJUSTING THE ENGINE CONTROLS

44. The arrangement of the engine controls is shown in Sect. 8, and the angular settings in fig. 22 of this Chapter.

Throttle controls

45. To assemble and adjust the throttle controls :—

(1) Set the throttle lever on the engine to the closed position, against the slow running stop.

(2) With the throttle set as in (1), the engine lever which is to be connected to the layshaft on the spar should be 27 deg. aft of the vertical datum.

(3) Set the lever on the torque tube in the engine bay at 50 deg. above the horizontal datum. Since the connecting rod is not adjustable, the lever on the throttle control layshaft should be 17 deg. aft of the vertical datum.

(4) Adjust the length of the connecting rod and couple up the layshaft lever with the engine lever.

(5) Move the throttle lever in the engine control box fully back to the end of its slot.

(6) Connect and adjust the throttle connecting rod (Part No. L.98419A Mk. 2, inboard, L.984118A Mk. 2, outboard)

in the cockpit in such a way that when the throttle lever is pulled back, the engine throttle lever is on the slow running stop and the engine control box lever is almost at the end of its travel, thus allowing a slight amount of spring.

Note . . .

The heads of the shackle pins must be on the outboard side of the torque tube levers and on the inboard side of the control box levers.

(7) Move the throttle lever fully forward, check that the engine throttle lever is on its open stop, and adjust the quadrant stop to almost touch the lever.

(8) Connect and adjust the other engine controls in a similar manner.

(9) Run the engines and set the rated boost stops on the engine control box by marking the position of the throttle levers at + 12 lb. per sq. in. boost pressure reading after correcting for the barometric pressure of the day.

Note . . .

The relative positions of the two levers in the control box must be synchronized during engine run to ensure that at all r.p.m. settings the throttle lever positions coincide. (*Refer to A.P.2653N*, and *T-G.H.N.,Chap.* 2).

Propeller controls

46. To assemble and adjust the propeller controls :—

(1) Set the lever on the torque tube in the engine bay 42 deg. below the horizontal datum.

(2) Set the lever on the governor unit 15 deg. forward of the centre line with the unit spring fully unwound, and also set the screwed attachment bolt on the lever serrations so that its centre is 1·57 in. from the centre of the spindle.

(3) Connect the screwed end of the Teleflex slide tube to the governor unit lever and pull the lever towards the rear end of the engine to fully compress the governor spring.

(4) With the levers set as in (1) and (3), and after finding the length of cable by trial, connect the ball end of the torque-tube lever to the Teleflex control. Once the correct cable length has been ascertained, adjustment is effected only at the torque tube end of the Teleflex control.

(5) Move the lever in the control box back to the limit of the quadrant slot, and the governor lever forward against the stop.

(6) With the levers set as in (5) connect the control box lever with the torque tube lever, adjusting the connecting rod (Part No. L.984121A Mk. 2, inboard, L.984120A Mk. 2, outboard) as necessary. The shackle pins should be fitted as in para. 47.

(7) Move the propeller control lever forward until the governor is against the " fine pitch " stop and adjust the quadrant stop bolt until it almost touches the lever.

(8) Adjust the other propeller control in a similar manner, ensuring that both control levers are synchronized in the forward position.

47. When the propeller levers are pulled back to the DECREASE R.P.M. position, the governor units should be on their stops at the same time as, or just before the levers reach the end of the slot. The total movement of both levers should be the same; if this is not so, correct by adjusting the 1·57 in. dimension on the affected control, as in para. 46 (2).

Slow running cut-out controls

48. To connect and adjust the slow running cut-out controls :—

(1) With a moderate tension applied at the engine ends of the control cables, operate the cockpit controls to ensure freedom of the cables through the conduits and over the pulleys.

(2) Set the cockpit controls back against the fuel cock panel and connect the control cable shackles to the cut-out levers on the engines. A slight amount of slack should be allowed on the cables to ensure that the engine control is not held off its running stop. Adjustment of the cable length is effected at the bobbin on the engine end of the cable.

(3) Pull out the cockpit controls and check that the cut-out levers have moved to the cut-out stop. Release the cockpit controls and the levers must return smartly to the running stops.

Supercharger controls

49. A description of the supercharger control is given in Sect. 8. The superchargers are operated by electro-pneumatic rams in conjunction with an aneroid switch, which is set to operate at 20,250 ft. and give full supercharge with the cockpit switch in the AUTO position. If desired, moderate supercharging can be used above 20,250 ft. by moving the cockpit switch to the MOD position, thus breaking the electrical circuit and cutting out the aneroid switch. For ground checks, a push switch is located on the port side of each firewall in the recess for the undercarriage shock-absorber strut. The cockpit switch must be set to AUTO and there must be more than 150 lb. per sq. in. pressure in the pneumatic system before functional tests can be carried out. The ram pin centre length when fully contracted is 7·9 in. and the stroke is 2·625 in.

50. Defects in the aneroid switch may cause :—

(1) The superchargers to change to high gear when on the ground, or at any altitude below 20,250 ft. with the cockpit switch at AUTO.

(2) The superchargers to fail to change to high gear at 20,250 ft. or higher, when the cockpit switch is at AUTO.

Note . . .

Failure of the electric or compressed air supply will result in the supercharger remaining in low gear at all heights.

FUEL SYSTEM

51. The fuel system is described and illustrated in Sect. 8. Filling and draining the system is covered in Sect. 4, Chap. 2.

Fuel cock control setting

52. To set the fuel cock controls :—

(1) Turn the fuel cocks, and the fuel cock controls in the cockpit to the OFF position. The fuel cocks are OFF when the stop pins on the sprockets are equidistant from the fixed stops.

(2) Assemble the chains to the sprockets so that there are equal lengths of chain on each side of the sprockets.

(3) Connect the cables, ensuring that they are not crossed, and adjust the turnbuckles in the cockpit until the cables are at the correct tension.

(4) Lock the turnbuckles and secure the cable guides.

(5) Check the operation of the fuel cock controls to ensure that the stop pins contact the fixed stops when the cocks are set to ON.

Cleaning the fuel filters

53. The filters are behind the firewalls and below the oil tanks. Turn the fuel cock to the OFF position, unscrew the wing nut securing the stirrup, swing the stirrup clear of the bottom casing, and withdraw the bottom casing complete with the strainer unit and spring. Wash the strainer in petrol and re-assemble the filter. Do not use rag for cleaning the strainer unit.

FUEL SYSTEM VENTING

Pressure test (*fig. 23*)

54. Whenever any joints in the fuel pressure-venting system have been disturbed, the following test should be carried out to test for leaks. This test should also be made at regular intervals, preferably with the detachable wing panels removed, so that the tank connections may be checked for fuel leaks under pressure. The following equipment is required :—

(a) Pressure gauge 0-5 lb. per sq. in. or 0-10 in. Hg.

(b) Means of applying air pressure.

(c) Blank for the vacuum pump oil separator drain connection.

(d) Blank for vent pipe, with a gauge connection.

The procedure is as follows :—

(1) Ensure that the filler caps are screwed down tightly in the wing inner and centre tanks, and the fuselage tanks, if fitted. The fuel cocks must be OFF.

(2) Blank the drain connection on the starboard oil separator.

(3) Disconnect the vent pipe on the tanks side of the pressure control valve, fit the blanking plug and connect the gauge.

(4) Disconnect the pipe from the pump side of the starboard vacuum pump oil separator and connect the compressed air supply.

(5) Gradually raise the pressure, but do not exceed $3\frac{1}{2}$ lb. per sq. in. or 7 in. Hg.

(6) With the air supply cut off, the pressure drop in the system must not exceed $\frac{1}{4}$ lb. per sq. in. or $\frac{1}{2}$ in. Hg. per minute.

Note . . .

(*a*) *To reduce the volume of air required to obtain the necessary pressure and to facilitate the tracing of possible fuel leaks, the tanks should be approximately $\frac{3}{4}$ full during the test. Great care must be taken to ensure that the pressure does not exceed $3\frac{1}{2}$ lb. per sq. in. and it is recommended that a relief valve, set to blow off at this pressure, should be fitted near the pressure supply.*

(*b*) *If it is necessary to change an atmospheric pressure valve, the new valve must bear a D.H. inspection stamp. This stamp is marked "D.H." in an oval.*

OIL SYSTEM

55. The system is described and illustrated in Sect. 8. Filling and draining of the system is described in Sect. 4, Chap. 2.

Cleaning the filters

56. The filters may be removed without draining the oil tanks as follows :—

(1) Remove the safety pin from the locking bridles and allow the bridles to swing down.

(2) Unscrew the centre wing nut from the base of the caps.

(3) Unscrew the base caps, and remove the filters and caps from the sumps.

57. Wash the filters in petrol and dry them with a high pressure air jet. Do not use rag for cleaning the filter gauzes. When re-assembling, first screw in the base caps, ensuring that the washers are dry and free from dirt, then screw the centre wing nuts into the base caps, place the bridles in position and lock with the safety pin.

COOLANT AND INTERCOOLER SYSTEMS

58. These systems are described in Sect. 8, and details for filling and draining are given in Sect. 4, Chap. 2. The coolant consists of a mixture of 30 per cent. ethylene glycol, AL-2 (Stores Ref. 34B/559) and 70 per cent. clean mains water to which has been added a corrosion inhibitor, NaMBT concentrate, AL-4 (Stores Ref. 34B/228), or 30 per cent. fluid alcohol, AL-3 (Stores Ref. 34B/236) and 70 per cent. water The latter mixture supersedes the former and must be used when stocks of ethylene glycol and NaMBT concentrate are exhausted. Fluid alcohol consists of a mixture of ethylene glycol and NaMBT. When refilling either system containing AL-2 and AL-4, after it has been drained, the NaMBT should be introduced at the rate of 40 c.c. per gall. Thereafter, at periods given in the Servicing Schedule, 15 c.c. of this inhibitor should be added for each gallon of the system capacity. At specified servicing periods the specific gravity, acidity and NaMBT content of the coolant must be tested, reference being made to A.P.1464C, Vol. 1, Part 2, Sect. 5.

Radiator flap control

59. Each flap is operated through a screw jack, sprocket, chain and Teleflex cables. When the flaps are fully closed the indicators should read SHUT, the jacks should be fully retracted and the clearance between the top of the trailing edge and the duct back plate restrictor should be 1·25 in., as indicated in fig. 40 conversely, when fully open, the flaps should have a clearance of 3·28 in., the jacks being fully extended and the indicators reading OPEN. The Teleflex cables may be adjusted through adjusters positioned forward of the front spar and outboard of the fuselage. The flaps mav also be adjusted by altering the length of the connecting rods.

HYDRAULIC SYSTEM

60. Two different systems are utilised, both of which are decribed in Sect. 9 and illustrated in fig. 24, 26, 27, 28, 29A, 29B, 29C and 29D. The later of these systems (fig. 29A, 29B, 29C and 29D) is introduced by Mod. 1443 and incorporates accumulators.

61. Scrupulous cleanliness is essential in all servicing operations on the system, as

a small piece of swarf or other foreign matter under a valve may render the system inoperative. Clean fluid only (of the type specified in the Leading Particulars) should be used for filling or topping up ; the filter inside the reservoir filler neck must always be in position during the operation. Fluid containers used for filling or topping up must be perfectly clean, and flushed out with a small quantity of fluid before using ; the tops of storage containers must be thoroughly cleaned before decanting the fluid.

SMOOTHING UNIT (*fig.* 25)

62. For checking hydraulic pressures, a smoothing unit, Stores Ref. 26BY/8007, complete with gauges and adapters is available ; although its use is not essential, the smoothing unit will be of assistance when reading peak pressures as it will smooth out rapid pressure fluctuations.

SERVICING TROLLEY

63. For filling an empty system and for carrying out operations and fault finding tests, it is necessary to couple a power-driven pump to the system. For this purpose, a Hydraulic Servicing Trolley (Stores Ref. 4F/172) is provided, fitted with a hydraulic pump (Stores Ref. 37G/263) similar to those fitted to the aircraft engines. The trolley is described in A.P.2306B, Vol. 1. The method of preparing and using the trolley is as follows :—

(1) If the fluid previously used in the trolley is other than that specified for this aircraft, all traces of it must be flushed away as it is most important that no fluid of the wrong type be allowed to enter the system.

(2) Set the pmup on the half-speed drive and couple the suction and delivery hoses to the appropriate connections on the control box. Also couple the other pair of hoses to the control box.

(3) On the aircraft, uncouple the suction and delivery hoses of the port or starboard engine-driven pump from the rigid pipes (*para.* 85) and connect the hoses from the trolley to the pipes.

(4) Set the circuit control lever on the trolley control box to the CLOSED position, and the relief valve control lever to the setting marked 1,500 lb. per sq. in. The pump on the trolley then draws its supply of fluid from the aircraft fluid reservoir, that of the trolley not being in circuit.

Note . . .

The rig described above may be used on aircraft incorporating Mod. 1443, *but the relief valve must not be used.*

FILLING

64. When filling an empty system :—

(1) Trestle the aircraft (*fig.* 4).

(2) Couple a hydraulic servicing trolley to the system (*para.* 63).

(3) Fill the reservoir with the fluid specified in the Leading Particulars. It is most important that during the filling operation the reservoir be kept topped up, otherwise air will be drawn into the system.

(4) With the selector levers in the cockpit at neutral, start the trolley engine and allow it to run for a short time under no load.

(5) Raise and lower the undercarriage, flaps and the bomb doors, by moving the selector levers in the cockpit. Stop the trolley with the undercarriage down.

(6) Select undercarriage UP and operate the hand pump. If the undercarriage does not start to retract, prime the hand pump suction lines (*para.* 65).

PRIMING

65. When filling an empty system, it may be necessary to prime the hand pump suction lines ; a spare hand pump and a container filled with fluid are required.

(1) Remove the plug from the banjo connection on the lower end of the emergency selector valve, which is situated on the front bulkhead in the bomb bay, and couple the delivery line of the spare hand pump to the banjo.

(2) Operate the hand pump for several strokes to fill the suction lines between the reservoir and the emergency selector valve and between the valve and the aircraft hand pump, then operate both pumps simultaneously. To check that the lines are primed,

select flaps UP or DOWN and operate the aircraft hand pump. If the flaps do not move, repeat the priming operation.

(3) With the undercarriage retracted and the undercarriage selector lever at neutral, press down the emergency selector lever and again operate the hand pump to fill the emergency lowering pipelines. To check that the lines are primed, operate the aircraft hand pump ; the undercarriage should lower. If it does not, repeat the priming. On aircraft incorporating Mod. 1443 the undercarriage selector lever must be set at DOWN.

(4) When the lines are primed, disconnect the spare hand pump and refit the plug in the banjo connection.

(5) Raise the emergency selector lever to NORMAL. Select undercarriage DOWN and operate the hand pump until considerable resistance is felt. This returns the clack valves on the undercarriage jacks to their seatings.

VENTING

66. Venting must be carried out after filling an empty system or after pipelines have been disconnected. The principal effects of air in the system will be chattering of the engine-driven pumps or sponginess in the flap circuit. Vent screws are fitted at both ends of each jack, on the main selector valve and on the hand pump. The two latter points will not normally be used, as operation of the system by a hydraulic servicing trolley will pass out most of the air at these points through the reservoir which is vented to atmosphere. The jacks, however, should be vented individually by opening the vent screws one at a time, and operating the hand pump with the selector valve set so as to direct the fluid into the end of the jack being vented. When all air has been expelled, clear fluid, free from bubbles will escape ; the vent screw should then be tightened and locked. One circuit should be completely vented before passing to the next. The tools for venting the jacks are listed in para. 2, Table 1.

67. A typical venting operation is as follows :—

(1) Select flaps DOWN.

(2) Open the vent screw at the head of a flap jack and operate the hand pump until all air is expelled. Close the vent screw and repeat on the other jack.

(3) Select flaps UP and vent the ram ends of the jacks.

(4) Return the selector valve to neutral.

Note . . .

After venting, the flaps should be tested when in an intermediate position, by applying an equal hand load on the trailing edge of both flaps simultaneously; there should be no sponginess. The flaps should be tested frequently in this manner as it is particularly important to exclude all air from the flaps circuit.

DRAINING AND REMOVING COMPONENTS

68. When removing a component, all unions and pipes should be blanked off to prevent the ingress of dirt. On reassembly, care must be taken that all pipes are coupled up correctly, this is facilitated by observing the code numbers attached to each pipe. It is not necessary to drain the whole system in order to remove a component. Usually it is possible to disconnect a pipe and blank it off immediately, catching the small quantity of fluid that escapes in a tray. Care should be taken not to spill the fluid as it has a deleterious effect on protective coverings. The following paragraphs, give details on draining prior to removal of certain components.

Reservoir and emergency selector valve

69. The reservoir is divided into two compartments, both of which can be emptied by the hand pump. Disconnect the delivery line from the emergency selector valve (the fourth connection from the top of the valve) and pump the contents of one compartment into a clean container. Depress the emergency selector valve and continue pumping to empty the other compartment. Alternatively, there is a drain plug in the base of each compartment.

Hand pump

70. Place the emergency selector valve half way between the NORMAL and the EMERGENCY settings, and uncouple the suction and delivery pipes from the hand pump ; blank off the pipe ends.

Jacks and flow control valves

71. Set the appropriate selector lever to UP and disconnect the up lines from the jack or flow control valve; this action shuts off the up lines from the return lines and only the small quantity of fluid in the pipe will escape. Select DOWN and disconnect the down lines.

Note . . .

When jacks are removed from the aircraft for replacement or transportation, it is essential that all hydraulic fluid be ejected, the ram secured in the retracted position and the connections blanked. Flow control valves are not fitted if Mod. 1443 *is embodied.*

FAULTS AND REMEDIES

72. Faulty operation may be caused by defects in components, restrictions in pipelines or excessive mechanical stiffness. Air trapped in the system can usually be expelled by operating the circuits several times; if this is ineffective, the system should be vented (*para.* 66), the flap circuit being the one most likely to require venting. Defective operation might be caused by dirt on valve seats and this may be cleared by operating the affected circuit several times. If mechanical stiffness is suspected, the operating pressures should be checked (*para.* 83). In most cases, faults in the system can be traced to a particular component by consideration of the behaviour of the system. In this connection, the table of faults and remedies (*para.* 75) will be of assistance, although it is not exhaustive.

Restriction in pipelines

73. Consider the effect of excessive restriction in the port undercarriage up line. When undercarriage UP is selected, the delivery from the engine-driven pumps is directed by the selector valve to the UP line, which branches to the port and starboard jacks at the junction block. Owing to the restriction in the port branch, the starboard jack will reach the retracted position first. The delivery from the pumps will then be confined to the port line, creating a shock wave, accompanied by a considerable rise in pressure in the selector valve and the pipelines from the pumps. If the restriction in the port up line is sufficiently great, this sudden rise will cause the selector valve to return to neutral before the port jack has completed its travel, and the port undercarriage will therefore drop. Since the selector valve does not return automatically to neutral, on aircraft embodying Mod. 1443, the port jack will take considerably longer than the starboard jack to reach the retracted position.

74. Now consider the effect of a restriction in the main return line to the reservoir. When the jacks have extended fully, the selector valve returns to neutral and consequently directs the delivery of the engine-driven pumps back to the reservoir. Owing to the restriction in the return line, a considerable pressure will be required to circulate the fluid, and this pressure will be present in the selector valve. With the valve at neutral, up and down lines are connected to the reservoir through the selector valve and pressure will thus be transmitted to the jacks. If the pressure is high enough, it will lift the internal down lock in the jacks, thus unlocking the undercarriage, which will be indicated by the red lights showing. On aircraft embodying Mod. 1443, the selector valve does not return automatically to neutral, therefore the jacks will take considerably longer to reach the retracted position, and vice-versa.

75.

Table of hydraulic system faults and remedies

TABLE 5

Symptoms	Cause	Remedy
(1) Low or no delivery from the engine-driven pumps.	(a) Pump shaft sheared.	(a) Fit a new pump.
	(b) Leak on the suction side of the pump.	(b) Check the suction line and junction block for leaks. Check for fracture of the suction pipe inside the reservoir.

TABLE 5—*continued*

Symptoms	Cause	Remedy
(2) No delivery from the hand pump.	(a) Defective hand pump.	(a) Fit a new pump or rectify defect.
	(b) Non-return valve in the pressure junction block leaking.	(b) Rectify.
	(c) Leak in the suction line.	(c) Check by changing to emergency. If pressure can be built up with the undercarriage down, the pump is satisfactory and the trouble is in the normal suction line.
(3) Selector levers return to neutral immediately they are set to UP or DOWN (Pre-Mod. 1443 only)	(a) Increase in viscosity of fluid due to cold weather.	(a) Operate the flap circuit as much as possible during the engine run before flight.
(4) Selector levers do not return to neutral (Pre-Mod. 1443 only)	(a) Faulty flow control valve.	(a) Rectify or fit a new valve.
	(b) Selector valve out of adjustment.	(b) Adjust (*para.* 84).
	(c) Selector valve cams worn or plungers sticking.	(c) Fit a new valve.
(5) Selector valves trip out but do not return completely to neutral (Pre-Mod. 1443 only)	(a) Foreign matter or stiffness in the lever mechanism	(a) Clean and lubricate the levers. Set the throw-out pressures to the top limit (*para.* 84). If ineffective fit a new selector valve.
(6) One or both of the main wheel units almost retracts, but drops when the selector lever returns to neutral. Retracts correctly if the lever is held at UP. (Pre-Mod. 1443 only).	(a) Mechanical obstruction.	(a) Raise the undercarriage by the hand pump, checking the clearance from the associated structure. Check the freedom of the joints and for obstruction on the jack ram stop sleeve.
	(b) UP stops out of adjustment.	(b) Check the adjustment.
	(c) Foreign matter between the cam and the roller on the selector valve.	(c) Clean.
	(d) Selector valve worn or plungers sticking.	(d) Fit a new selector valve.
	(e) Selector valve out of adjustment.	(e) Adjust (*para.* 84).
	(f) Restrictions in the pipeline.	(f) Rectify (*para.* 72).
	(g) Undercarriage door cables out of adjustment.	(g) Adjust (*Sect.* 5).
	(h) Faulty tail wheel jack or flow control valve, or leak in pipelines.	(h) If no external leaks are found, check for leakage past the jack piston (*para.* 82). Fit a new control valve if necessary.

TABLE 5—*continued*

Symptoms	Cause	Remedy
(7) As in (6) but the undercarriage does not lock up when the lever is held at UP. (Pre-Mod. 1443 only).	(a) As in (6) (a) (b) As in (6) (b) (c) As in (6) (f) (d) As in (6) (g) (e) Broken up-lock spring. (f) Jack stroke incorrect (g) Faulty or incorrectly adjusted main relief valve. (h) Faulty engine-driven pump. (j) Faulty undercarriage jacks.	(e) Fit a new spring. (f) Adjust (*para.* 27). (g) Adjust to 1,900 ± 50 lb. per sq. in. by shims behind the spring, or fit a new valve. (h) Fit a new pump. (j) Check for leakage past the piston (*para.* 82). Fit a new jack if faulty.
(8) Undercarriage retracts but does not stay up, or stays up but the red lights remain on, even (Pre-Mod. 1443) after holding the selector valve at UP for 3 seconds. Selector valve throw-out pressure known to be correct in case of pre-Mod. 1443 aircraft.	(a) Undercarriage door cables out of adjustment. (b) Jack stroke incorrect.	(a) Adjust (*Sect.* 5). (b) Adjust (*para.* 27).
(9) As in (8) but the red lights go out when the lever is held at UP for 3 seconds.	(a) Jack stroke incorrect. (b) Up micro switch and spring out of adjustment.	(a) Adjust (*para.* 27). (b) Adjust (*para.* 76).
(10) Undercarriage retracts correctly but one or both green lights remain on.	(a) Jack internal plunger not operating micro switch.	(a) Check that the movement of the switch operating plunger is correct (*para.* 84). If incorrect, adjust the plunger and the micro switch.
(11) With the undercarriage down, the green lights do not show unless the selector lever is held at DOWN for 3 seconds. Electrical system and lamps known to be in order. (Pre-Mod. 1443 only).	(a) Obstruction between the radius rod down stop faces, or the stops out of adjustment. (b) Weak or broken spring in the jack internal lock. (c) Restriction in the main return line.	(a) Clean the stop faces. Check the stop adjustment and the jack ram length (which may te too long). (b) Fit a new spring. (c) Check the line between the selector valve and the reservoir (*para.* 73).

TABLE 5—*continued*

Sympton	Cause	Remedy
(12) With the undercarriage down, the green lights do not show, even (pre Mod. 1443) with the selector lever held DOWN for 3 seconds. Electrical system and lamps known to be serviceable.	(a) As in (11) (a). (b) Micro switch leaf spring out of adjustment. (c) Faulty lock in jack (*fig.* 30). (d) Jack not extending enough for the lock to engage.	(b) Adjust (*para.* 77). (c) Fit a new jack. (d) Adjust the jack ram length.
(13) Undercarriage slow in operation, but the operating pressure is correct.	(a) One engine-driven pump has failed. (b) Tail wheel flow control valve incorrectly set, or faulty. (Pre-Mod. 1443 only).	(a) Check by operating the flaps with each pump separately. Fit a new pump. (b) Adjust (*A.P.1803B, Vol.* 1) or fit a new valve.
(14) Red or green lights flickering.	(a) Loose screws, etc., in the micro switch.	(a) Rectify.
(15) Red lights flickering whilst the undercarriage is retracted.	(a) Faulty undercarriage up micro switch. (b) Jack internal lock worn.	(a) Fit a new switch. (b) Fit a new jack.
(16) Tail wheel does not retract or drops in flight.	(a) Faulty flow control. valve. (Pre-Mod. 1443 only). (b) Faulty jack. (c) Obstruction in pipelines.	(a) Fit a new valve. (b) Fit a new jack. (c) Check by disconnecting the pipelines and pumping fluid through them.
(17) Flaps drop, or blow upwards in flight	(a) External leak. (b) Leak past the jack. (c) Faulty flow control valve. (Pre-Mod. 1443 only).	(a) Trace and rectify. (b) Fit a new jack. (c) Fit a new control valve.
(18) One or both bomb doors drop when the selector lever is at neutral. (Pre-Mod. 1443 only).	(a) Defective flow control valve. (b) Leak in pipelines.	(a) Rectify or fit a new control valve. (b) Check the pipelines for leaks between the flow control valve and the jacks.
(19) Movement of bomb doors not synchronized.	(a) Defective flow control valve. (Pre-Mod. 1443 only). (b) Leak or restriction in the pipelines to the bomb door jacks.	(a) Rectify or fit new control valve. (b) Check the pipelines to the jacks, on the door which is slow on opening or closing, for leaks or a restriction.

ADJUSTING THE UP MICRO SWITCH

76. The spring fitted to the micro switch, at the top of the undercarriage bay, should be adjusted so that the top part of the leaf spring is touching the plunger of the switch. and the bottom of the leaf spring is $\frac{3}{16}$ in. from the front end of the latch fitting. This allows for slight movement of the hook in flight without the red light coming on.

TESTING OPERATION OF THE DOWN LOCK AND MICRO SWITCH

77. With the aircraft trestled to clear the wheels from the ground, remove the undercarriage locking cap, and screw in the test tool, Stores Ref. 26BY/16249, by the knurled cap C, hand tight against the machined face of the lock. With the index on the setting ring at S, adjust the centre screw E until it is in good contact with the end of the hydraulic lock plunger, then secure with lock-nut D. Switch on the electrical service switch in the cockpit and observe that the green lamp lights on both port and starboard undercarriage indicators. Move the setting ring until G corresponds with S ; the light should not change. Then move the undercarriage selector lever to UP and apply pressure by the hand pump. This setting on the test tool permits the spring-loaded lock to move $\frac{3}{64}$ in. and if the micro switch is set correctly, the green lamp will continue to glow. If, at this position, the green lamp goes out or the red lamp lights, re-adjustment of the micro switch is necessary. To do this, slacken the lock-nut on the adjustable contact of the micro switch and by screwing the contact in or out, adjust it so that the light changes from green to red when the lock plunger moves exactly $\frac{1}{16}$ in. Move the undercarriage selector lever to DOWN and use the hand pump to return the jack to the fully extended position to engage the lock plunger. Re-select UP and move the setting ring until R is opposite S. The test tool will then permit the lock plunger to move $\frac{1}{16}$ in. Operate the hand pump ; with the movement of the plunger, the green light should change to red on the corresponding side of the undercarriage indicator. The thick line at R indicates the extent of the tolerance permitted. Repeat the entire sequence for the other lock.

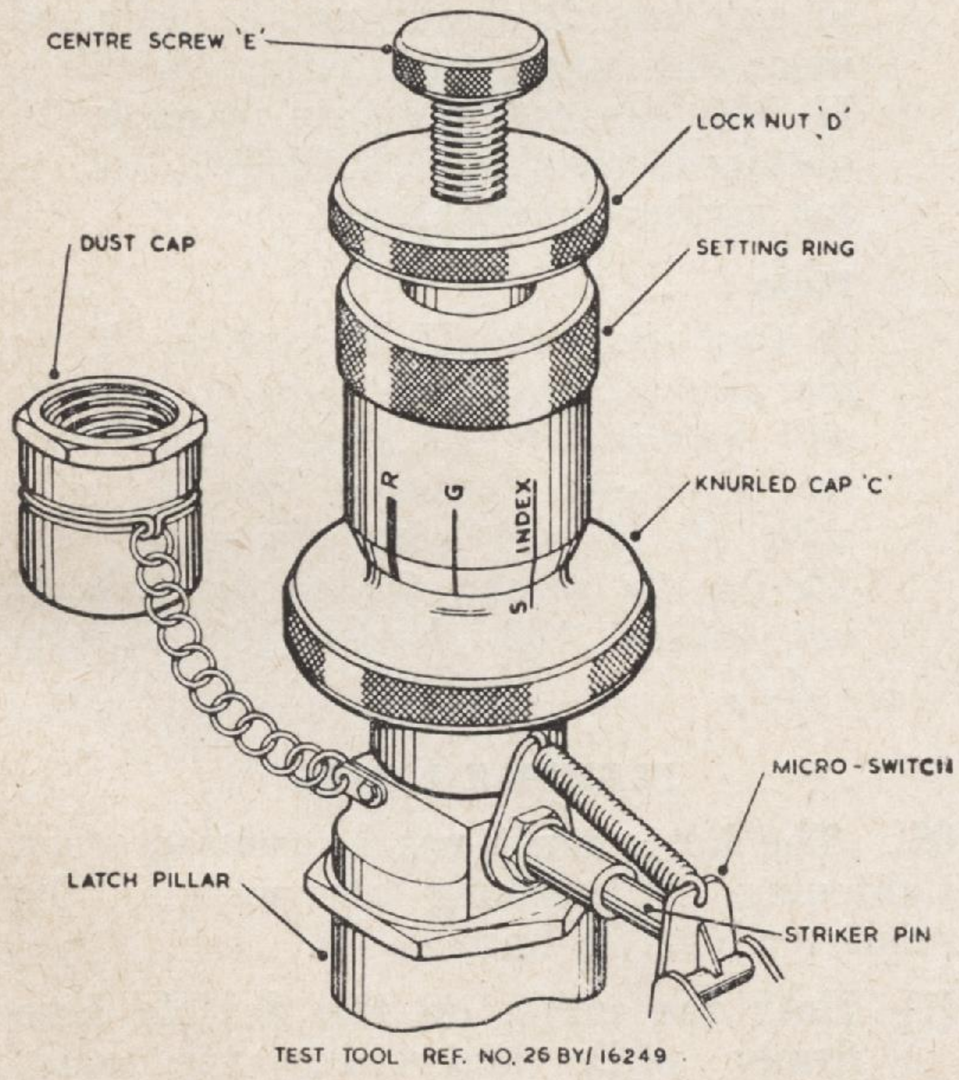

Fig. 2. Undercarriage down lock test tool

ADJUSTING THE ALIGHTING GEAR WARNING HORN SWITCHES

78. The cams operating the micro switches for the alighting gear warning horn are mounted on the throttle torque tubes in rear of the radiators, and are adjusted as follows :—

Port switch

79.

(1) Remove the radiator inspection cover.

(2) Set the port throttle lever in the engine control box $\frac{3}{4}$ in. from the fully closed position. This is the setting at which the horn will sound ; lightly mark this position.

(3) Connect a test buzzer or lamp across the terminals A and D on the micro switch.

(4) Slacken one of the bolts on the cam sufficiently to allow the cam to turn on the torque shaft. Then turn the cam without moving the torque tube until the buzzer sounds or the lamp lights. Tighten the bolt.

(5) Open the throttle lever about half-way and slowly close it until the test indicator functions, then check the marking on the throttle quadrant.

Starboard switch

80. The starboard throttle-operated micro switch is adjusted in a manner similar to that for the port switch.

ADJUSTING THE BOMB DOOR MICRO SWITCHES

81. The bomb door micro switches are located on the rear face of bulkhead No. 2. With the bomb doors fully open, check that the micro switch plungers are in alignment with the jack centre lines, and that the plungers have been compressed to within 0·12 in. of their housings. To adjust the micro switches, slacken the two bolts holding each switch to its mounting bracket, and move the switch along the slotted holes until the correct plunger projection is obtained. Close the bomb doors and check that the indicator lamp on the bomb panel goes out, and shows only when the doors are fully opened.

CHECKING THE JACKS FOR LEAKAGE

82. If internal leakage in a jack is suspected, the following test can be applied without removing the jack from the aircraft :—

(1) With the jack retracted, select UP on the appropriate selector lever and disconnect the down line at the jack, blanking off the hose immediately.

(2) Apply both low and high pressures by means of the hand pump; there should be no leakage past the piston.

(3) Re-couple the down line, select DOWN and operate the hand pump until the jack is fully extended.

(4) Disconnect the up line, apply low and high pressures; there should be no leakage past the piston.

ADJUSTING THE SELECTOR VALVES

83. If the selector levers do not return to neutral at the completion of an operation, or they return prematurely (pre Mod. 1443), the throw-out pressures require adjusting. When the aircraft is in flight, the selector levers should return to neutral at the following pressures :—

From	*Throw-out pressures*
Undercarriage UP	1,600 ± 100 lb. per sq. in.
Undercarriage DOWN	1,200 ± 100 lb. per sq. in.
Flaps UP and DOWN	1,000 ± 100 lb. per sq. in.
Bomb doors UP and DOWN	1,000 ± 100 lb. per sq. in.

84. Full details of the method of adjusting the throw-out pressures are given in A.P.1803 Series, Vol. 1, but in many cases the following procedure will be sufficient :—

(1) Trestle the aircraft and couple a hydraulic servicing trolley to the system (*para.* 63).

(2) Connect a pressure gauge, calibrated to 2,000 lb. per sq. in., to the vent screw orifice of the selector valve. A special hose, Stores Ref. 26BY/9627, and an adapter, Stores Ref. 26BY/9617, are available for coupling the gauge to the selector valve.

(3) Operate the circuit concerned in each direction and read the peak pressure at which the lever returns to neutral.

(4) Adjust the throw-out pressure from the DOWN setting by means of the adjusting screw visible below the selector lever being adjusted. Turn the screw inwards to decrease the pressure, and outwards to increase it. Test and adjust until the DOWN setting is within the limits given in para. 83, before continuing with the adjustment of the UP setting.

(5) Adjust the UP throw-out pressure by means of the screw in the extreme lower end of the selector valve in line with the lever concerned. Turn the screw inwards to decrease the pressure and outwards to increase it. In certain circumstances, the screw will have no effect on the throw-out pressure and in any case it should not be adjusted more than one turn in either direction. If the correct pressure cannot be obtained, refer to A.P.1803B, Vol. 1, for further information.

Note . . .

A final check should be made by flying the aircraft (with the pressure gauges still connected to the selector valve) and the throw-out pressures should agree with the figures given in para. 83. *During the checks, the airspeed should not exceed* 156 *knots* (180 *m.p.h.*) *I.A.S.*

FLEXIBLE HOSES

85. The hoses must not be twisted when tightening or loosening connections. To remove a flexible hose :—

(1) Hold the union on the flexible hose firmly while unscrewing the outer union nut of the pipe connections.

(2) The hose may be removed from the other fixed part by rotating the hose and the union nut together.

Note . . .
When re-fitting a hose, the reverse procedure should be followed.

HYDRAULIC PIPE CONNECTIONS

86. Overtightening of a pipe should be avoided as it will tend to damage the flared joint. The union nut should be screwed on to the adapter (after the flare, collar and adapter have been cleaned) until resistance is felt; this indicates that the flare is nipped. Approximately $\frac{1}{16}$ of a turn beyond this should be sufficient to hold the joint securely. A further slight amount of tightening may be necessary if leakage occurs, but if this is ineffective, disconnect the joint and examine the flare or adapter for scoring or cracks. If necessary the pipe should be re-flared (*para.* 87).

Re-flaring of pipes

87. The instructions given below are for making a new flared end on a light-alloy pipe to Spec. D.T.D.310 :—

(1) Drain the system locally and remove the affected pipe.

(2) Cut the pipe $\frac{1}{4}$ in. behind the defective flare. Trim the end square and remove all sharp edges, ensuring that no filings enter the pipe.

(3) Re-flare the end of the pipe as described in A.P.1464D, Vol. 1, Part 2, Sect. 3.

Tests

88. The tests given in the following paragraphs have been broadly divided into two groups. The first group (*para.* 89 *and* 91) is headed "Routine tests" and comprises functional tests which should be carried out after simple servicing operations have been performed. A hydraulic service trolley, equipped with the same type of pump as fitted to the aircraft, is required for these tests. The second group (*para.* 92 *to* 97) is headed "Special tests" and includes more exhaustive tests to be applied after major overhauls and after carrying out extensive work on the system; these will also be useful in locating elusive hydraulic faults. Two hydraulic servicing trolleys, fitted with the appropriate pumps will be required, but if only one servicing trolley is available, it can be used by setting the hydraulic pump on the trolley at "full speed" drive.

ROUTINE TESTS

Functional tests

89. The system should be primed and vented before applying the following tests on aircraft pre Mod. 1443 :—

(1) Trestle the aircraft (*fig.* 4).

(2) Connect a pressure gauge calibrated to 2,000 lb. per sq. in. to the vent screw orifice of the undercarriage selector valve.

(3) Couple a hydraulic servicing trolley to the system, using a Lockheed Mk. 6 pump.

(4) Start the trolley pump, raise and lower the undercarriage six times. The mean times for the operation should be :—

Raising	34 seconds
Lowering	40 seconds

The working pressure before the selector lever commences to return to neutral should not exceed 900 lb. per sq. in. while raising or lowering. If the test is performed with the undercarriage doors disconnected, the pressure should not exceed 750 lb. per sq. in.

(5) Check that the down locks spring fully home at the end of the lowering operation and that they disengage smoothly at the commencement of the raising operation. The end of the lock plunger is visible when the dust cap is removed from the latch housing.

(6) Raise the undercarriage and with the pump running, check for clearance between the tail wheel and its mudguard; there should be a 0·05 in. gap between the fork and the UP rubber stops. Stop the trolley pump.

(7) Test the emergency circuit by pushing down the emergency selector lever and operating the hand pump.

Note . . .
The tail wheel will not be lowered by the emergency system.

(8) Raise the emergency selector lever to its full extent. Select undercarriage

DOWN and operate the hand pump until considerable resistance is felt. This returns the clack valves on the main undercarriage jacks to their normal setting.

(9) Start the trolley pump, raise the undercarriage, then stop the pump.

(10) Select undercarriage DOWN and operate the hand pump until the undercarriage and the tail wheel are locked down. Check that the tail wheel down lock plunger has engaged in the safety lock the full extent of its travel, 0·4 in.

(11) With the dust caps removed, and the trolley pump running, check the undercarriage down lock plunger for excessive movement by lowering and raising the flaps. During this operation, the movement of the plunger (due to back pressure) should be negligible. If the movement is excessive, renew the buffer unit (*para.* 98) and repeat the test.

(12) Raise and lower the flaps six times. The flaps movement should be synchronized and even, during both up and down travel. The mean operating times should be :—

Raising	26 seconds
Lowering	28 seconds

The working pressure, before the selector lever returns to neutral, should not exceed 600 lb. per sq. in. during up travel and 400 lb. per sq. in. during down travel, ± 50 lb. in each case.

(13) Move the flaps to about the mid position and return the selector valve to neutral, leaving the trolley pump running.

(14) Apply equal manual pressure, simultaneously, to the trailing edge of each flap ; it should not be possible to move them in either direction. Sponginess, if apparent, is an indication of air in the circuit, which should be removed by venting. If there is no sponginess but the flaps can be moved, the flow control valve is not functioning correctly as a hydraulic lock. It should be possible to move the flaps by light hand pressure on either flap, in which case depression of one flap should raise the other an equivalent amount, and vice versa.

(15) Stop the trolley pump and carry out one cycle of operations with the hand pump. When the flaps are fully closed the rubber stops should be compressed.

(16) Open and close each bomb door individually by means of the hand pump and check the structure clearance and the tightness of the rubber seals with the doors in the closed position. With the doors in the open and closed positions, and the selector lever at neutral, apply a manual load to the doors to check for air in the jacks and the correct functioning of the flow control valve. There should be no movement.

(17) Start the trolley pump and open and close the bomb doors six times ; the movement should be even and synchronized. The mean operating times should be :—

Opening	14 seconds
Closing	12 seconds

The working pressure before the selector lever returns to neutral should not exceed 600 lb. per sq. in. while closing and 400 lb. per sq. in. whilst opening the doors.

90. On aircraft embodying Mod. 1443, an accumulator system, the working pressures are controlled by an automatic cut-out valve. This valve is set to cut-in at 1,300 lb. per sq. in. and to cut-out at 1,650 + 50 lb. per sq. in. These pressures can be checked by gauges which are fitted to the accumulators in the rear fuselage, above and behind the entry door. Test the system as follows, using two servicing trolleys, each being fitted with a Lockheed Mk. 6 pump operating as 1,400 —1,500 r.p.m.

(1) Trestle the aircraft as shown in fig. 4 and couple up the trolleys.

(2) Start one trolley, raise the undercarriage, allow the cut-out valve to operate, then stop the pump. Ensure that the wheel doors are correctly locked, and sealed and that they conform to the contour of the nacelle.

(3) Start the trolley, lower the undercarriage, allow the cut-out valve to operate, then stop the pump. Ensure that the wheel doors do not foul the sides of the nacelle and that the wheel tyres do not foul the doors.

(4) Start both trolleys and raise and lower the undercarriage five times, allowing the cut-out valve to operate after each operation. At the same time, check the functioning of the warning lights, and the operational times; these should be :—

Raising	9-11 seconds
Lowering	7-9 seconds

(5) Check the operation of the DOWN locks (*refer to para.* 89, *sub-para.* 5).

(6) Insert a pressure gauge in the selector valve emergency line. Start one trolley, raise the undercarriage and shut off the pump. Select CHASSIS DOWN, push the emergency selector lever down and, using the hand pump, lower the undercarriage. The pressure required to lower the undercarriage should not exceed 500 lb. per sq. in.

Note . . .

The tail wheel unit can be lowered by the emergency circuit.

(7) Start the trolleys in turn and raise the undercarriage once on each pump, then effect five complete cycles of operations on both pumps.

(8) Start one trolley and select FLAPS DOWN, allowing the cut-out to operate. Check the angle of each flap (*refer* to *fig.* 10). Select FLAPS UP and allow the cut-out to operate. Check the clearance and alignment of each flap with the shroud. Select FLAPS DOWN and, when take-off angle is shown on the indicator, select " NEUTRAL," then check the angle of each flap.

(9) Carry out five complete cycles of operations, using both pumps and allowing the cut-out valve to operate after each full movement of the flaps. The operational times should be within the following limits :—

Lowering	12-15 seconds
Raising	12-15 seconds

Port and starboard flaps should synchronize within two seconds.

(10) Shut off both pumps, release the pressure in the system and, with the emergency selector valve in the neutral position, operate the hand pump, selecting FLAPS UP and DOWN. Ensure that neither the undercarriage nor the bomb doors move during these operations.

(11) Start one trolley and select BOMB DOORS DOWN, allowing the cut-out to operate. Check that the bomb doors open fully. Select BOMB DOORS UP and allow the cut-out to operate. Check that the bomb doors close fully.

(12) Carry out five cycles of operations, using both pumps and allowing the cut-out to operate after each full movement of the bomb doors. The operational times should be within the following limits :—

Lowering	2-3 seconds
Raising	2-3 seconds

(13) Shut off both pumps, release the pressure in the system and, with the emergency valve in the neutral position, operate the hand pump, selecting BOMB DOORS DOWN and UP. Ensure that the other services do not move during these operations.

(14) When the tests are completed, or if for any reason the aircraft is left unattended, release the pressure in the system by operating the release valve mounted below the floor adjacent to the main entrance door.

Pressure test

91. The following test checks the pipelines and unions for leakage :—

(1) With a pressure gauge, calibrated to 2,000 lb. per sq. in., fitted in the vent screw orifice of the selector valve, and the undercarriage locked down, select undercarriage DOWN and operate the emergency selector (Mod. 1443) and the hand pump until a considerable pressure is obtained. The hand pump has no separate relief valve and the pressure is limited by the main relief valve. Therefore, maintain a pressure of approximately 1,800 lb. per sq. in. by operating the hand pump slowly, and examine for leakage in the pipelines from the hand pump to the emergency selector valve, to the main selector valve, and the down lines from the selector valve to the jacks.

(2) Select undercarriage UP and operate the hand pump. Check the up lines

from the main selector valve to the jacks. Return the selector lever to neutral. Repeat these tests with the flaps UP and DOWN and the bomb doors UP and DOWN.

Note . . .

It might be necessary to hold the selector levers at UP *or* DOWN *since the pressure applied by the hand pump will be higher than the throw-out pressures of the selector valves ; the selector levers do not, however, always throw out under hand pump operation, and it is not an indication of a faulty selector valve if the selector levers have to be returned to neutral by hand. It is essential to operate the hand pump slowly to maintain the test pressures, otherwise the pressure will fall owing to seepage. This, however, does not indicate a fault. When Mod.* 1443 *is embodied it is not necessary to hold the selector* UP *or* DOWN.

SPECIAL TESTS

92. It will not be necessary to apply the following tests except in the circumstances mentioned in para. 88. Main relief valve, selector valve throw-out and back pressure tests are *not* applicable to aircraft incorporating Mod. 1443.

Non-return valves

93.

(1) Disconnect the engine-driven pump delivery lines from the non-return valves in the pressure junction block.

(2) With the undercarriage locked down, select undercarriage DOWN, leaving the flap and bomb door selector levers at neutral.

(3) Apply and maintain slight pressure by the hand pump ; there should be no leakage past the non-return valves.

Hand pump

94. The following test checks the efficiency of the hand pump and also checks for internal leakage in the pump.

(1) Connect a pressure gauge, calibrated to 2,000 lb. per sq. in., to the vent screw orifice in the main selector valve or to the hand pump delivery connection on the emergency selector valve.

(2) With the undercarriage locked down, hold the undercarriage selector lever at DOWN, leaving the other two levers at neutral. Operate the hand pump ; it should be possible to attain a pressure of 1,900 ± 50 lb. per sq. in., at which the main relief valve should function. Any leakage in the hand pump will show during this test.

Main relief valve

95.

(1) Connect a pressure gauge, calibrated to 2,000 lb. per sq. in. to the main selector valve vent screw orifice.

(2) Couple up and run a hydraulic servicing trolley.

(3) With the undercarriage locked down, hold the selector valve at DOWN for not more than 5 seconds. The relief valve should, in that time, blow off at 1,900 ± 50 lb. per sq. in. The valve whistles when blowing off.

Back pressure

96.

(1) Connect a pressure gauge, calibrated to 500 lb. per sq. in., to the main selector valve vent screw orifice.

(2) Couple two hydraulic servicing trolleys to the system and set all selector valves at neutral.

(3) Start the trolley pump ; the gauge should not read more than 150 lb. per sq. in.

WARNING

Do not move any selector valve from NEUTRAL *during this test or the pressure gauge will be damaged.*

Selector valve throw-out pressures

97.

(1) Connect a gauge, calibrated to 2,000 lb. per sq. in., to the main selector valve vent screw orifice.

(2) Connect two hydraulic servicing trolleys to the circuit.

(3) Operate each circuit in turn and note the momentary peak pressure at which the selector lever returns to neutral. The throw-out pressure should be within the limits as stated in para. 83.

BUFFER UNIT (*fig. 29*)

98. On aircraft pre Mod. 1443 a buffer unit is inserted in the undercarriage up line to damp out oscillation in the system

which causes lock bounce and, consequently, flickering of the undercarriage warning lights. The buffer unit is mounted above the main selector valve unit. Before installing, remove the blanking plug fitted to the top of the unit and pour in about one tablespoonful of oil OF-4 (Stores Ref. 34B/207). The fluid enters the chamber on the atmospheric side of the piston and lubricates the cylinder walls and piston guide. The buffer unit should be tested to 2,600 lb. per sq. in. for 10 seconds before being fitted; note also the test applied in para. 89 (11).

PNEUMATIC SYSTEM

99. The pneumatic system is described in Sect. 9, the servicing of the brake differential control, pneumatic brakes, air cylinder, air filter and the pressure reducing valve being dealt with in A.P.2337, Vol. 1. The compressor, oil-and-water trap, and pressure regulator are detailed in A.P.1519, Vol. 1. Should the pressure maintaining valve become defective, it should be renewed. The services dependent on the pneumatic system are—engine air-intake shutters, supercharger gear change and wheel brakes. The location of components and pipelines is illustrated in fig. 31 and 32.

WARNING

Release all air from the system before attempting to remove any of the units.

Draining

100. The oil-and-water trap must be drained regularly, either when the port engine is running or when the system is being charged from an outside source of supply. The air filter and bottle should also be drained in accordance with the Servicing Schedule; the bottle must be removed for this purpose and the pipe adapter disconnected.

Brake pressure gauge

101. With the test gauge connected, the brake pressure gauge in the cockpit should show the same pressure up to a maximum of 200-225 lb. per sq. in. and should not exceed this figure when the system pressure is raised to the maximum.

Electro-pneumatic rams

102. Should the rams develop defects, replacements should be fitted, no attempt being made to dismantle defective rams.

TESTING THE SYSTEM

Testing equipment required

103. A charging cylinder with cut-off valve, a flexible hose equipped with an Instantair bayonet socket to connect the charging cylinder with the charging point and a test pressure gauge fitted with an Instantair male-end coupling. Alternatively, a power driven Hymatic compressor can be used in place of the charging cylinder.

Method of testing

104.

(1) Charge the system to approximately 50 lb. per sq. in. Insert a pressure gauge in the test point and test the input non-return valve by removing the plug on the charging connection; the gauge pressure should remain constant.

(2) Increase the charge to 140 lb. per sq. in. Operate the brakes and leave "parked" for 30 minutes; note the test gauge reading. There should be no drop in pressure. With the rudder neutral and the brake lever depressed there should be not less than 70 lb. per sq. in. pressure registered on the triple gauge for each brake. The supply pressure on the brake gauge should agree with that shown on the test gauge.

(3) Check the functioning of individual brakes by disconnecting the hose at each brake drum in turn and plug the end of the hose. With alternate rudder pedals pushed forward, check the torque on each wheel.

(4) Raise the system air pressure to 250 lb. per sq. in. Input to the brakes should be between 220-225 lb. per sq. in. Finally, charge the system to 450 lb. per sq. in. and check that the pressure regulator functions at this pressure.

(5) After charging to the maximum pressure (450 lb. per sq. in.), leave for 12 hours, and check that the pressure in the system has not dropped below 400 lb.per sq. in.

Functioning of the supercharger rams

105. To test the supercharger ram move the master switch to ON, set the supercharger switch to AUTO and operate the push switch positioned at the bottom right-hand side of each firewall. This operation may be done without the engine running if there is sufficient pressure in the air cylinder. Check for full travel and clearance from the engine structure. With ram in, and out, apply pressure by hand against the lever in the direction of travel. No further movement of the lever should be obtained. The minimum pressure required to operate the rams is 160 lb. per sq. in.

Air-intake filter control

106. Before the filter shutters can be operated the electrical master switch on the lower instrument panel must be switched ON, thus completing the undercarriage warning lamp circuit and allowing the filter circuit to make its negative return. To check the operation of the shutters, ensure that the undercarriage is locked down, the master switch is ON and the pressure in the pneumatic system is in excess of 160 lb. per sq. in., then press the FILTER OUT switch. The air-intake shutters should open to give an unobstructed air passage from the air-intake to the injection pump. On release of the switch the shutters should close automatically, i.e., return to the FILTER IN position. Retract the undercarriage and press the FILTER OUT switch; the shutters should move to the open position and remain there until the FILTER IN switch is operated. Operate the FILTER OUT switch and lower the undercarriage. The shutters should return automatically to the FILTER IN position when the undercarriage has locked down. The operation of the filter shutters to the OUT position may be checked without retracting the undercarriage. This can be done by inserting packing between each down lock micro-switch and its spring clip until the plunger extends fully and then pressing the FILTER OUT switch. The system is illustrated in Sect. 8.

Air-intake hot and cold air control

107. The testing of this control should be done in conjunction with the filter control check, since the two systems are interconnected electrically. With the undercarriage locked down, set the control switch to HOT AIR; the hot-air shutters should open, the filter shutters remaining closed. Retract the undercarriage, then check that the position of the shutters has not altered. Set the switch to COLD AIR; the hot-air shutters should close; the filter shutters move to the open positoin, i.e., FILTER OUT. Lower the undercarriage and when it has locked down ensure that the filter shutters have moved to the closed position.

VACUUM SYSTEM

108. The vacuum system is illustrated in fig. 23. There are two vacuum pumps, Pesco B3X, Mk. 3, which are mounted on the starboard side of the auxiliary drive at the forward end of each engine, and a relief valve, Stores Ref. 37J/102, fitted on the top port engine mounting tube. The system on the pressure side of the vacuum pumps is shown in fig. 34 and 35.

INSTALLING THE PUMPS

109. Before installing a vacuum pump, remove the flange protection plate, the dust plugs in the pump suction and pressure ports, and rotate the drive shaft by hand to ensure that no foreign body has entered the pump. Only a moderate force should be necessary to do this; if otherwise, the pump should not be fitted. For further particulars of the pump refer to A.P.1519, Vol. 1.

110. Before the pipe connections are made run the engine to check the lubrication of the pump. A small quantity of oil should be present in the exhaust air after the pump has warmed up.

SERVICING THE SYSTEM

Testing

111. All vacuum pump settings are to be made with the engine running at 2,650 r.p.m. Set the relief valves initially to give a suction of 8 in. Hg. measured at the test points on the relief valves. With each pump running separately a reading of 3·9 to 4·0 in. Hg. should be recorded on the instrument panel suction gauge. With both pumps running the suction gauge reading should not be less than $4\frac{1}{2}$ in. Hg. nor more than 5 in. Hg. Insert a test gauge into the Mk. 3 bomb sight suction line in the nose compartment, and the readings with both pumps running should be between

4·8 and 5·2 in. Hg. Adjust the relief valves to obtain these figures and ensure that the suction at the relief valve test points does not exceed 8 in. Hg. The settings may be less than this but must be similar for both pumps ± 0·5 in. Hg. If the foregoing figures cannot be attained, inspect the pipelines for leaks or restrictions.

Relief valve

112. For the adjustment and servicing of the relief valves reference should be made to A.P.1519, Vol. 1.

Checking the system on the port pump

113. The exhaust from the port vacuum pump provides pressure for transferring the fuel from the wing drop tanks, for operating the T.I.B. sight computor and the transfer of oil from the long-range tank, when fitted. To test the system proceed as follows :—

(1) Connect a pressure gauge (0-10 lb. per sq. in.) to modified wing drop tank filler caps and screw these caps firmly in the wing drop tanks. Should drop tanks not be fitted, connect the gauges to the air transfer line on the rear spar at ribs No. 8.

(2) With the port engine running, the oil transfer cocks and T.I.B. computor air cock at OFF, check the air pressure applied to the wing drop tanks when the fuel transfer cock is ON. If the long-range oil tank is not fitted, ensure that the transfer air pipe is blanked off. The fuel transfer air pressure should be $2\frac{1}{2} \pm \frac{1}{4}$ lb. per sq. in.

(3) Connect a pressure gauge (0-10 lb. per sq. in.) to the long-range oil tank air-transfer pipe, and a similar gauge to the T.I.B. computor air hose. Turn the fuel and oil transfer cocks OFF and the computor air cock ON. If the long-range oil tank is fitted connect the test gauge to a modified oil tank filler cap. The pressure recorded on each gauge should be 4 lb. per sq. in.

Vacuum control cock

114. This control cock is fitted in the pipelines between the vacuum pumps and the vacuum operated services ; connected to the cock are two non-return valves. Should one vacuum pump fail, the remaining pump cannot operate both the blind flying instruments and the bomb sight, therefore the vacuum control cock enables the pilot to connect either of the two services to the serviceable pump. Normally, the control lever is left central with the indicator showing NORMAL—BOTH PUMPS.

Dismantling the control cock and valve units (*fig. 3.*)

115. To dismantle the control cock, unscrew the cap-nut D and remove the control lever. Unscrew the plug E and gasket F ; the rotor B can then be withdrawn. The

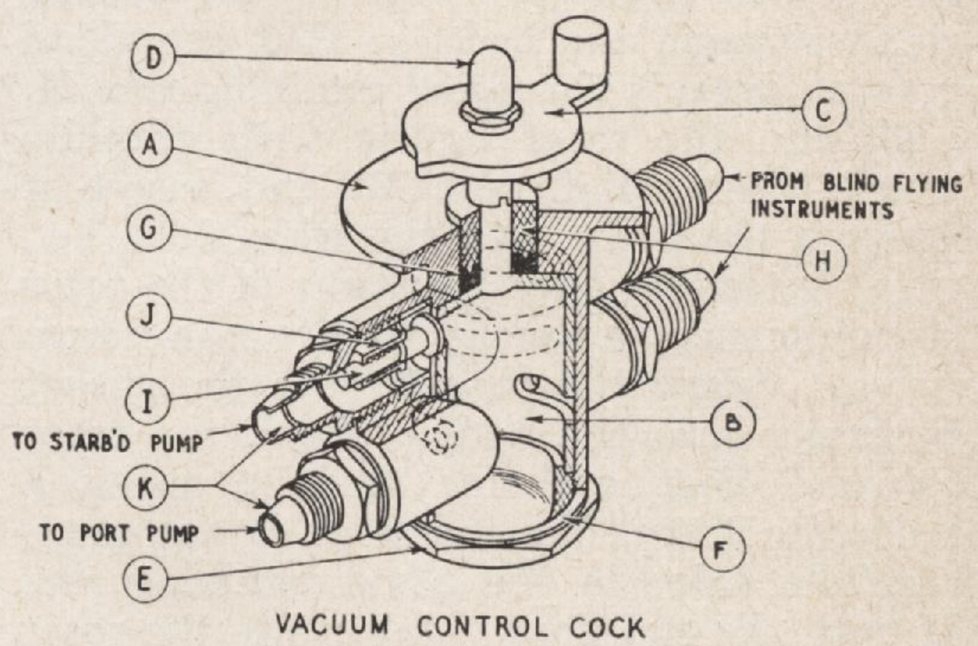

VACUUM CONTROL COCK

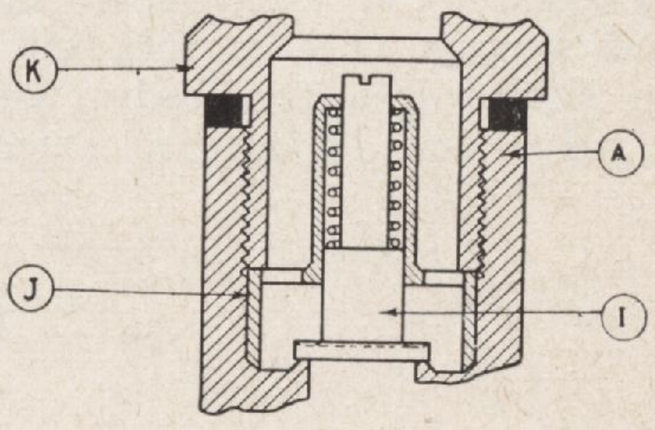

SECTION OF NON-RETURN VALVE

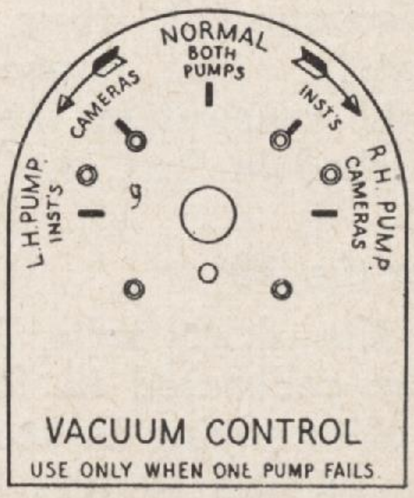

ESCUTCHEON PLATE

Fig. 3. Vacuum control cock

sealing gland G can be withdrawn from inside the body A, if it has not come away with the rotor. To remove the non-return valves, unscrew the valve securing adapters K and withdraw the valve guides J which are a push fit in the cock body. As the valve guides are withdrawn the valves will separate from the guides under the action of the springs ; they must be secured when the guides are clear of the body. Clean the dismantled parts and examine the contact surfaces of the rotor and body for wear and scoring. Check the non-return valves and seats for damage and good contact, and examine the valve springs and guides for corrosion and wear.

Assembling

116. Ensure that all parts are clean and dry before assembly. Insert the sealing gland through the body so that the gland groove contacts the gland retaining ring H. Lubricate the rotor lightly with graphite grease (Stores Ref. 34B/78) and insert it through the body with the wide slots, i.e., those extending over a quarter of the rotor circumference, adjacent to the non-return valves. Screw the plug E with the gasket F, firmly into the body. Check the rotor for end float and for rotation using a moderate force. If end float is apparent, carefully drive in the gland retaining ring H until the end float is taken up, the rotor must still turn with only a moderate force. Lightly lubricate the non-return valves, guides and springs with a thin oil and insert the guides into the body ; ensure that the valve and spring are correctly located in each guide. Screw the adapters, with the sealing washers, into the body. Ensuring that the plunger and spring are in position, fit the control lever and the cap-nut.

Testing the cock and non-return valves

117. Connect a vacuum pump rig to the union at one of the non-return valves and blank off the connection to the blind flying instruments. Connect a vacuum gauge and a variable restrictor valve to the bomb sight connection and leave the other non-return valve connection open to atmosphere. Start the vacuum test rig and verify that the non-return valve on the open connection closes immediately and that there are no leaks at the unions or at the rotor spindle. Repeat the test on the other non-return valve.

OXYGEN SYSTEM

118. The oxygen system is illustrated in Sect. 4, Chap. 2. The pipeline filter is located on the forward side of bulkhead No. 4. For servicing of the system refer to A.P.1275A, Vol. 1.

Removal of cylinders

119. To remove the cylinders, first release all pressure from the system, then disconnect the pipes from the top of the cylinders. The nuts on the eye-bolts holding the securing cables to the mounting crates must be unscrewed, the clamps round the necks of the bottles separated ; the cylinders may then be removed.

MISCELLANEOUS

DRY AIR SYSTEM

120. Whenever the hose connections to the sandwiched panels on the windscreen and canopy are disconnected, they must be sealed immediately. The removal of the air drier and the renewal of the silica-gel crystals is described in Sect. 4, Chap. 2.

Testing the drier (*fig. 36*)

121. To test the drier tube, a 12 in. mercury U-tube calibrated in lb. per sq. in., and means of supplying air at a pressure of 2 lb. per sq. in. and suction to 0·5 lb. per sq. in. will be required.

(1) Remove the drier from the aircraft.

(2) Blank off the valve outlet, and connect the T-line to the U-tube and the source of air pressure.

(3) Apply a pressure of 2 lb. per sq. in. ; the complete assembly should be air-tight.

(4) Remove the blanking hose and check that the outlet valve opens at 0·4 to 0·5 lb. per sq. in. pressure but is pressure tight below 0·4 lb. per sq. in. pressure.

(5) Apply suction at the connecting hose and check that the inlet valve opens at 0·4 to 0·5 lb. per sq. in. suction

and that the valve is closed below 0·4 lb. per sq. in. suction.

A.S.I. SYSTEM (*fig. 37*)

122. The position of the pressure head and static vents is indicated in the Leading Particulars. Both the pressure and the static lines are connected to the A.M.U. in the rear fuselage and to the T.I.B. computor in the nose compartment. A water trap drain plug is incorporated in the pressure pipeline and drain pipes in the static line, at bulkheads No. 5 and 7. Further drain pipes in the static line are located at bulkhead No. 3 and adjacent to the A.M.U. Should the A.M.U. not be fitted, both the static and the pressure line hoses must be connected to a dummy stowage on the fuselage wall, above the A.M.U. mounting. Details of pressure and other tests are contained in A.P.1275A, and B, Vol. 1.

FIRE-EXTINGUISHING SYSTEM

123. The fire-extinguishing system is described in Sect. 8. Two extinguishers are stowed in the rear of each wheel well fairing and before attempting to remove them, always break the electrical circuit by withdrawing the cable plug at the bottle. Prior to re-connecting the plug, always bridge the plug with a test lamp to ensure that the circuit is open. The bottles should be checked for leakage by comparing their weight against that of a full bottle. The contents of the bottles, methyl bromide, are orange coloured so that discharge or leakage is indicated by an orange stain round the engine nacelle or the bottles.

BONDING

124. The bonding system is illustrated in Sect. 6. When fitting a component that has to be bonded, always ensure that the bonding strip or tag is clean and makes intimate metallic contact with the component. Where moving parts, such as control surfaces, are bonded with braided flex, sufficient length must be allowed to prevent straining the flex at any position over their range of movement. Conversely, the flex should not be too long and should be so connected that intermittent contact with surrounding metal parts is impossible.

BOMB WINCHES

Winch for bombs up to 500 lb. (*fig. 38*)

125. Little maintenance is required on the winch other than checking the cable for serviceability and keeping the gearbox packed with grease. To renew a cable, the pulley must be removed from the gearbox shaft, the nut on the clamping thimble slackened and the cable replaced.

Handle torque load testing

126. The winch handle is of the safety type which slips on overload through the medium of a friction disc. The handle is designed to slip at approximately three times the normal effort required to operate the winch, i.e., the handle should slip when a load of 45 ± 5 lb. (360 ± 40 inch pounds) is applied. To test the torque loading, remove the handle and shaft from the gearbox and clamp the shaft in a vice. Hang a weight of 20 lb. on the handle and increase the load in 5 lb. stages up to 50 lb. Should the friction device require adjustment, the spring washer on the clutch may be adjusted in the following manner:—

(1) Knock back the tab of the lock washer (32).

(2) Rotate the nut (33) with spanner, Stores Ref. 26BY/4197, to give either more or less pressure on the spring washer (34).

(3) When the correct torque loading is obtained, re-lock the nut (33) by bending the tab of washer (32) into the nearest recess in the nut.

Dismantling the gearbox

127. To dismantle the gearbox:—

(1) Pull off the handle with the extension shaft (2).

(2) Remove the pulley by unscrewing plug (3) and removing spring (4). Loosen the cheese-head screw (5), tap out pin (6), remove driving plate (7) and release the circlip (8). The pulley can then be withdrawn from the shaft, complete with the cable.

(3) Remove the worm covers by releasing circlip (9), remove the four set-screws (10) from the cover (11) and withdraw the cover. Remove the four screws

(13) from the end cover (14) and withdraw the cover.

(4) To remove the top and bottom covers:—detach the bolt (16) and slide off the clutch adapter (17). Remove the four rollers (18) and the four plungers (19) from the inner member, leaving the springs (20) in position. The Allen grub screws (21) should then be loosened, using Allen key, Stores Ref. 26BY/13869, and the inner member (22) withdrawn. Remove eleven nuts (23) from each of the covers (24) and (25). These two covers can then be removed, taking care not to lose the rollers from the bearings (26).

(5) Withdraw the split pins, unscrew the nuts (28), tap out the spindles (29) and then withdraw the whole assembly located by each spindle. On each spindle there are two thrust races and two adjusting washers, a first worm wheel and a final worm.

(6) The final shaft (30) can now be removed from the box, together with ball bearings (12) and (15).

Assembling the gearbox

128. The sequence of assembly is the reverse of that for dismantling. Care must be taken to insert the first worm wheels (31) in their correct relationship to the worms on the shaft (27); the worms are right and left handed and the correct wheels must be matched with them. During assembly, the box should be packed with low-temperature grease (Stores Ref. 34B/222). When the assembly is completed, ensure that the gear train is free, by checking that the shaft (27) is free to rotate when turned by hand, and has about $\frac{1}{8}$ in. free rotation before turning the first worm wheels and the remaining train of gears. The rollers (26) should be located on the shaft by packing them in position with thick grease (Stores Ref. 34B/65).

WINCHES FOR 4,000 LB. BOMB (*fig. 39*)

129. Two 2,000 lb. winches are fitted on the wing centre rib for loading the 4,000 lb. bomb. The final drive bevel gear wheels and pinions should be kept free from grit, and lubricated with grease, and the lifting cable inspected for serviceability. Both the brake drum and shoes must be maintained in a clean condition, free from grease, and if the friction strips on the shoes are badly worn, they should be replaced by $\frac{1}{8}$ in. × $\frac{1}{2}$ in. × 4 in. bonded Ferodo strip, using $\frac{3}{32}$ in. countersunk copper rivets. Both ends of each strip must be well chamfered and the strip countersunk at the rivet holes so that the rivet heads are slightly below the surface. Each winch is made up of two main assemblies—the pulley and the bevel—and to separate them, remove the three 2 B.A. cheese head screws (1) holding the bevel gear gearbox to each side plate.

Dismantling the pulley assembly

130. To dismantle the pulley assembly, having separated it from the bevel assembly, remove the two $\frac{1}{4}$ in. B.S.F. × $3\frac{3}{4}$ in. bolts and nuts (2), and remove the shoe bracket (and cable bearing block on the rear winch). With the assembly lying flat and the pulley spindle head downwards, remove the screws (3) holding the cable guard and distance piece to the side plate (5), remove the spindle nut and washer (4), and lift off the side plate (5). Withdraw the pulley from the spindle, noting the number of packing washers on the outboard side of each ball bearing. Lift out the shaft (12) together with the bevel wheel (11). If the bevel wheel is to be removed, withdraw the inner race of bearing (9) from shaft (12), remove the shims (10) and withdraw the bevel wheel from the shaft and keys. To remove the cable from the pulley, loosen cable grip nut (22) and free the cable grip (23); the cable can now be freed and the cable grip falls clear of the pulley.

Dismantling the bevel assembly

131. With the pulley assembly detached, the bevel assembly can be dismantled as follows:—remove the 2 B.A. nut and washer (26), withdraw the spindle (27), remove the pawl spring rod (28), the pawl spring and the washer (29), detach the circlip (30) and pull off the pawl (31). Remove the 4 B.A. cheese-head screws and the cover (35). Detach circlips (36) and (37) and the washer (38). Tap out the four dowels (41), remove the eight 2 B.A. countersunk-head screws and extract the four $\frac{1}{8}$ in. dowels (43), then separate the clutch casing (44) and the bevel box very carefully, to avoid losing the spring loaded plungers (47), the springs (48) and the rollers (46) which form the auto lock.

Using a pair of tweezers, take out the four rollers (46), the four plungers (47), and the two springs (48). Loosen the grub screw (50), withdraw the clutch inner member (51), take off the clutch housing (45) and the brake cover (52). Remove the keys (53), the brake housing (54), the distance piece (55), and the bearing (56), together with the bevel pinion (49).

132. To dismantle the bevel box, withdraw the clutch adapter (57), remove the four 2 B.A. countersunk-head screws (39) and the cover (42), then remove bearing (58) and bevel wheel (60). Loosen the Allen grub screw (61) with Allen key, Stores Ref. 26BY/13869, ease up the bevel wheel (64) to the reduced shaft diameter and remove the keys (62) ; then withdraw the universal joint with the shaft (63) attached, and extract the bevel wheel (64) and the adjusting washer (65) from the bevel box.

Handles

133. The handles are of the safety type and are set to slip at approximately 50 per cent. greater effort than normally required to operate the winch. The friction device should operate at a torque of 475 inch pounds, i.e., when a load of 50 lb. is hung on the handle which is 9·5 in. long. If the torque loading requires adjustment, bend the tab of lock washer (68) clear of nut (69), then turn nut (69) to increase or decrease the torque loading as required. To dismantle the handle, clear the tab of washer (68) from, and remove nut (69), washer (68) and spring (67) ; the handle can be withdrawn clear of the driven member (70). If the Ferodo disc is to be renewed, remove the eight 2 B.A. nuts and countersunk screws holding the plate (71) to the handle and tap out the plate to clear the spigot. The Ferodo disc is secured to the plate by eight $\frac{3}{32}$ in. countersunk copper rivets.

Assembly of Winches

134. The bevel and pulley units are assembled by reversing the dismantling instructions. Pack the interior of the auto lock and bevel case with low temperature grease (Stores Ref. 34B/174). Offer up both assemblies and refit the six cheese-head screws (1).

Testing the winches

135. Each complete assembled winch should be tested by hoisting a 2,000 lb. weight so that the brake can be adjusted to give free and smooth operation during hoisting and lowering. To tighten the brake, turn the adjusting screw with a screwdriver so that the shoes are moved apart, and vice versa to ease the brake.

DINGHY

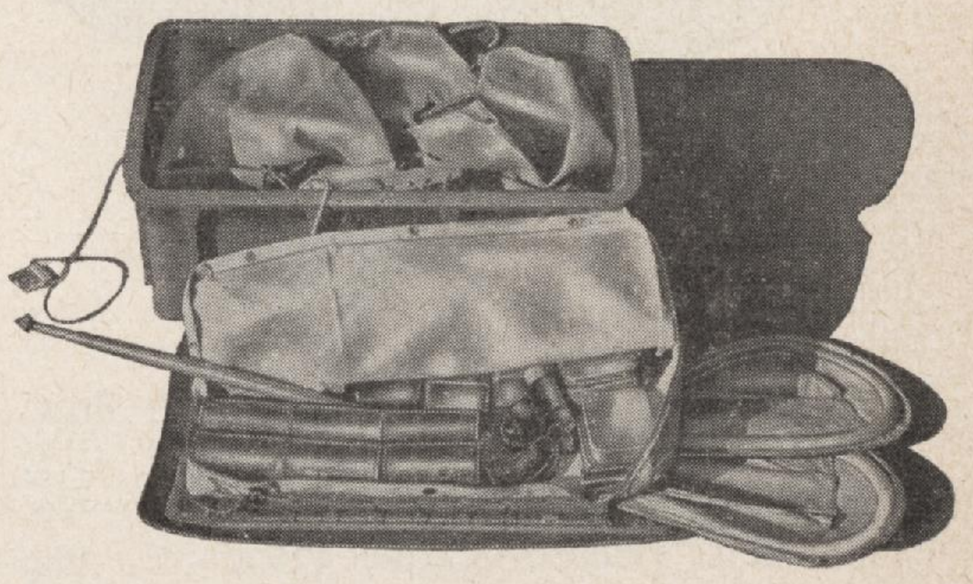

Fig. 3A. Stowage of dinghy

Packing the equipment (*fig. 3A*)

136. The dinghy, complete with equipment, is stowed in a compartment in the top of the fuselage forward of bulkhead No. 3. The equipment is stowed as follows :—

(1) Pack six tins of cartridges flat, with the sea markers, into the closed side of the bag.

(2) Stand the seventh tin of cartridges upright in front of the sea markers.

(3) Pack the fresh water and tins of soup in the space provided on the left of the open side of the bag. Place the telescopic mast behind them.

(4) Place the sponge, signal pistol, leak stoppers, two tins of rations Mk. 11 and matches into the remaining space.

(5) Lace the stowage bag to the dinghy cover.

(6) Pack the glove type paddles between the stowage bag and the cover.

Folding and stowing the dinghy

137. The method of folding and stowing the dinghy, outlined in the following description and illustrations must be carried out in the order of numbering :—

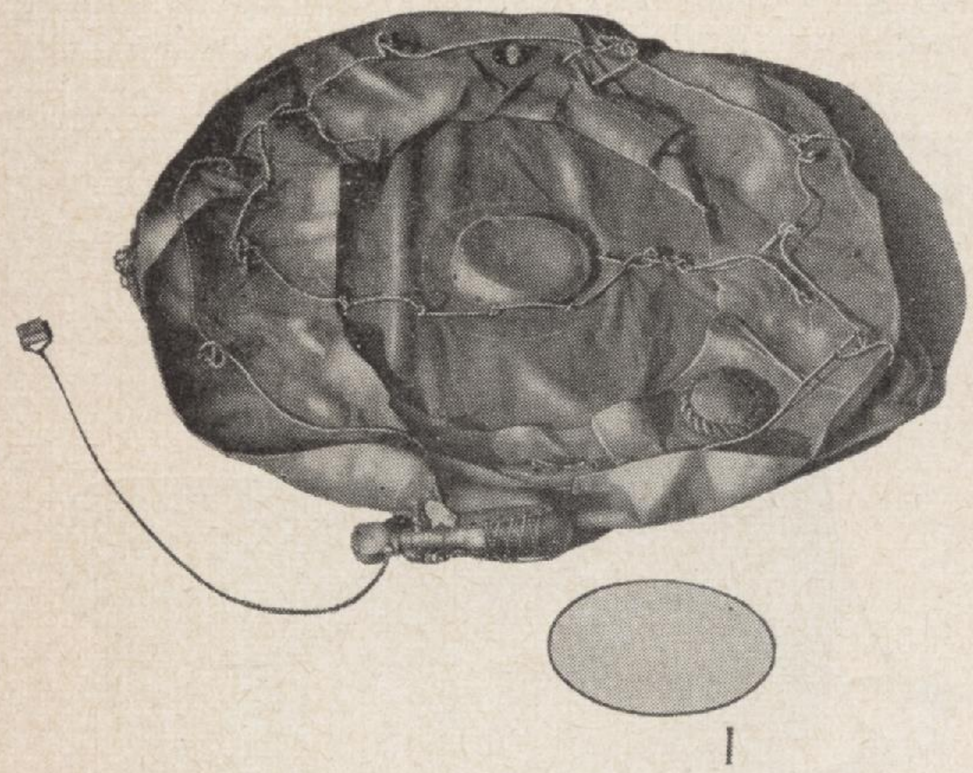

(1) Lay out the dinghy on a clean floor free from grit, etc., with the CO_2 bottle nearest the packer. Keep the manual release cable clear of the dinghy to avoid accidentally operating the pressure head. Stow the topping up bellows in the centre of the dinghy and fasten the cover. Fold and attach the drogue to the lifeline and stow in the pocket opposite to the CO_2 bottle. Stow the knife in the pocket adjacent to the CO_2 bottle.

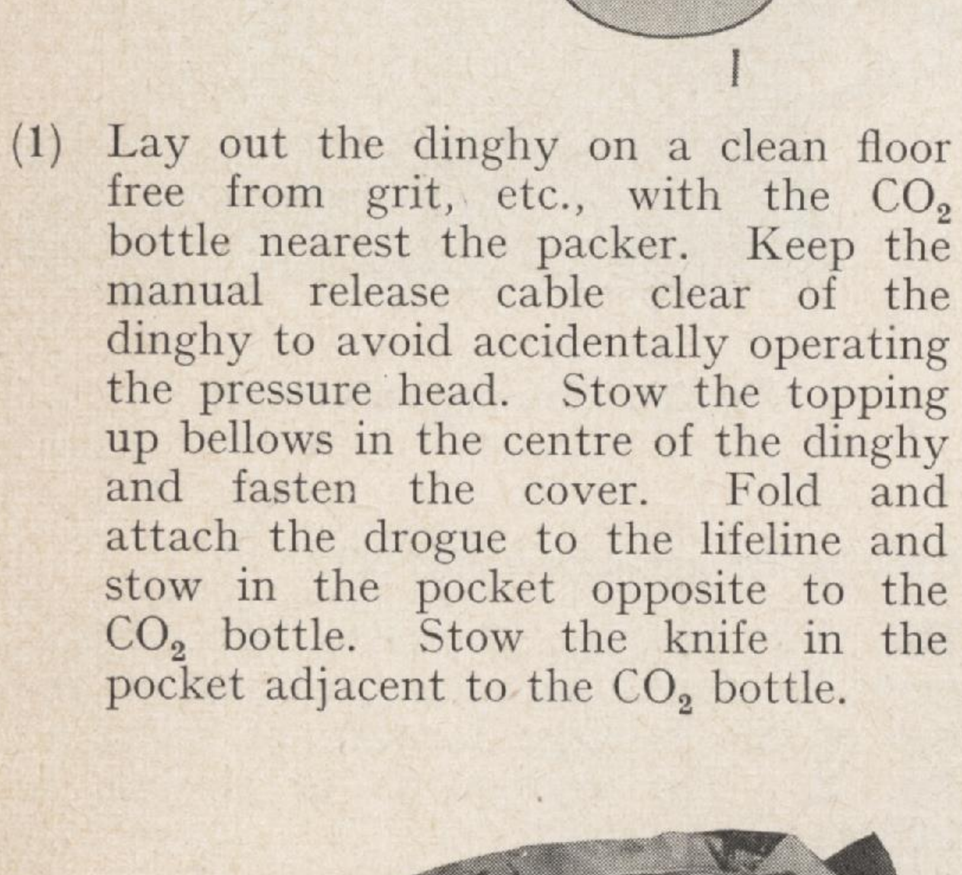

(2) Fold over the right-hand side of the dinghy to a little less than two thirds of the width of the dinghy.

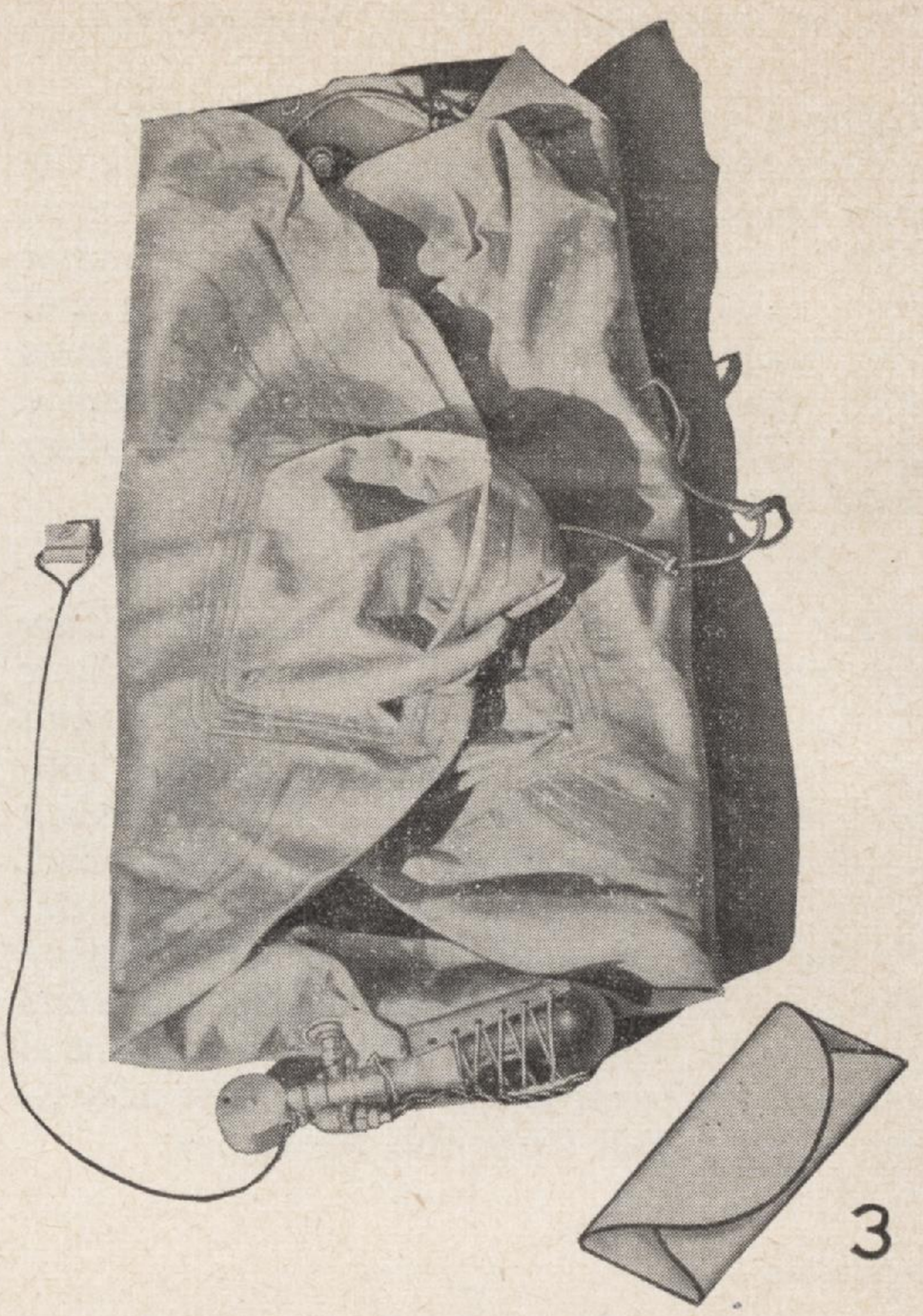

(3) Fold over the left-hand side to about the length of the dinghy box, leaving the end of the lifeline free.

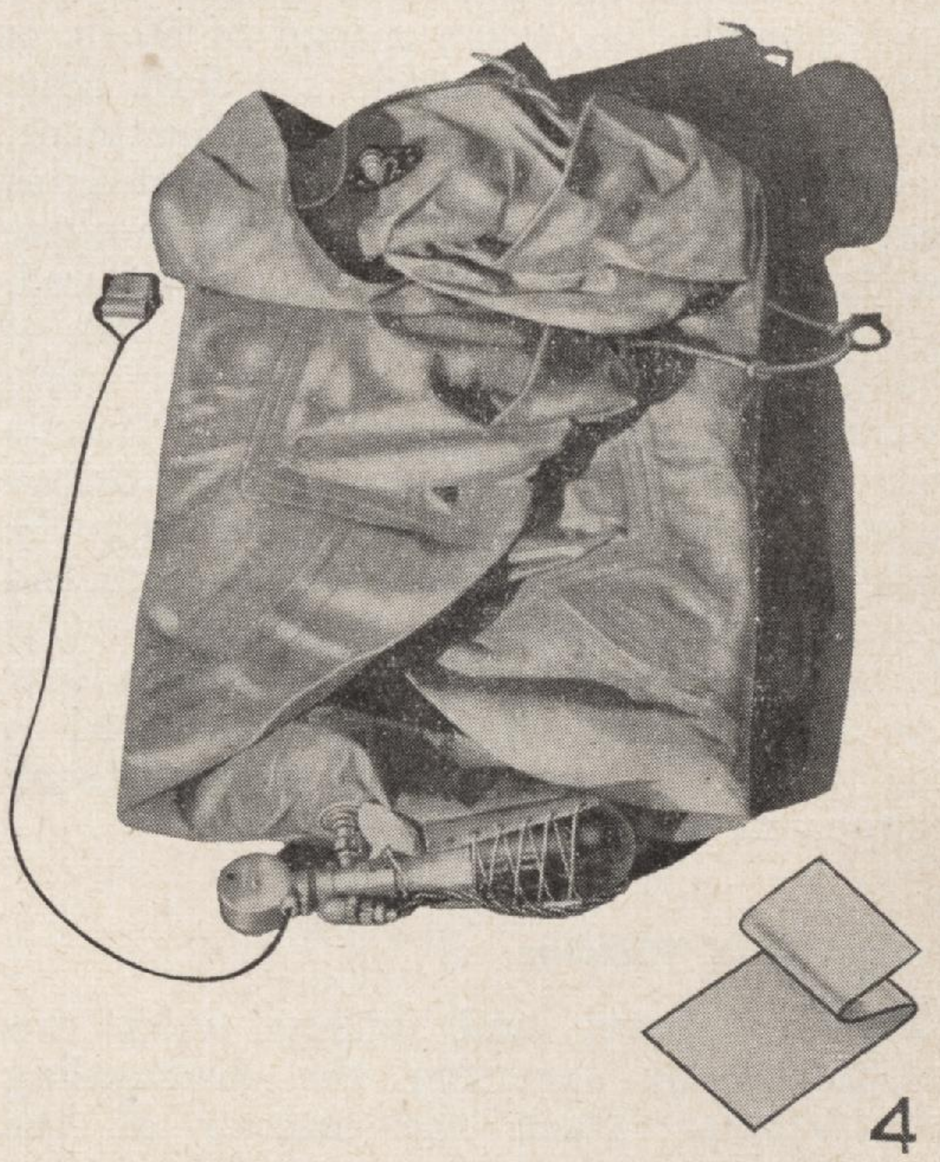

(4) Fold down the top end of the dinghy to within three or four inches of the CO_2 bottle and then back again in the form of an S.

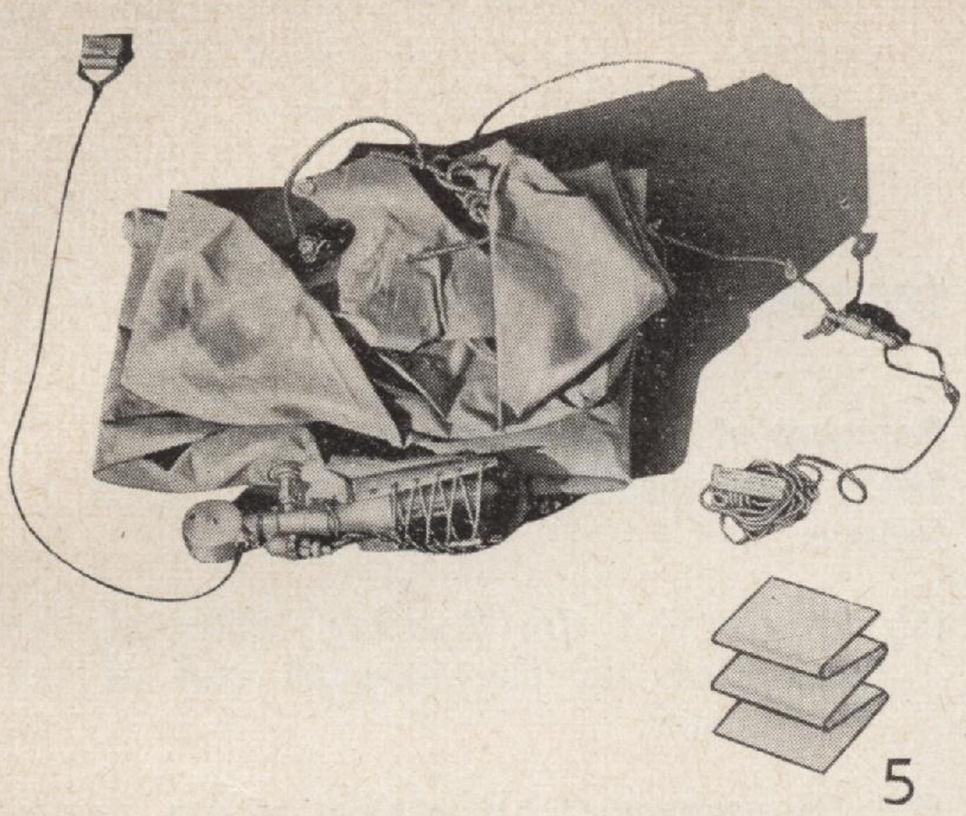

5

(5) Keeping the top of the dinghy on top of the folds, complete a second S fold to make a compact pile. Attach the painter to the lifeline by threading the lifeline through the eye on the quick release and knotting securely.

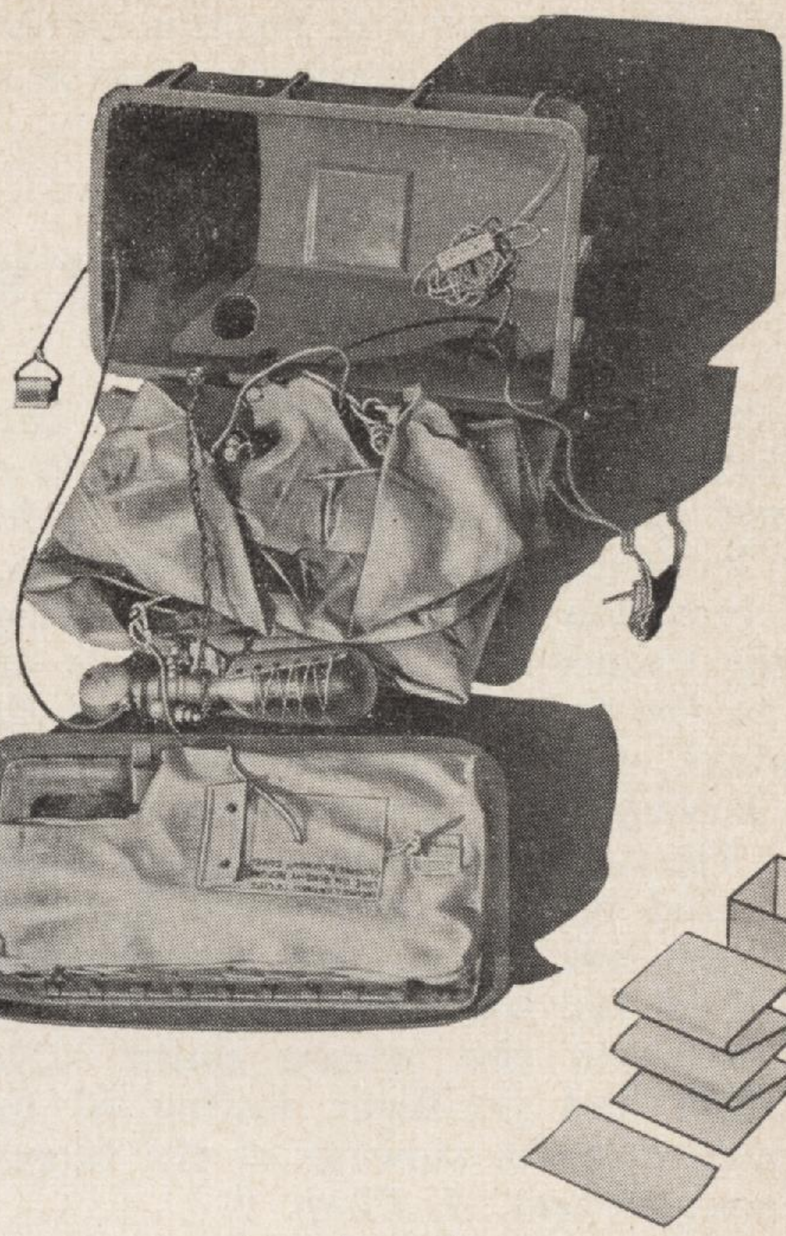

7

(7) Unclip the handle from the manual release cable and pass the cable through the hole at the forward end of the dinghy box ; reclip the handle. Pass the end of the painter through the hole in the bottom of the box at the rear right-hand corner and knot securely. Arrange the electrical plug from operating head so that it is clear to pick up with socket in box.



6

(6) Connect the dinghy box cover to the dinghy, passing the lanyard on the stowage bag through a loop of the lifeline and securely tying with a reef knot.

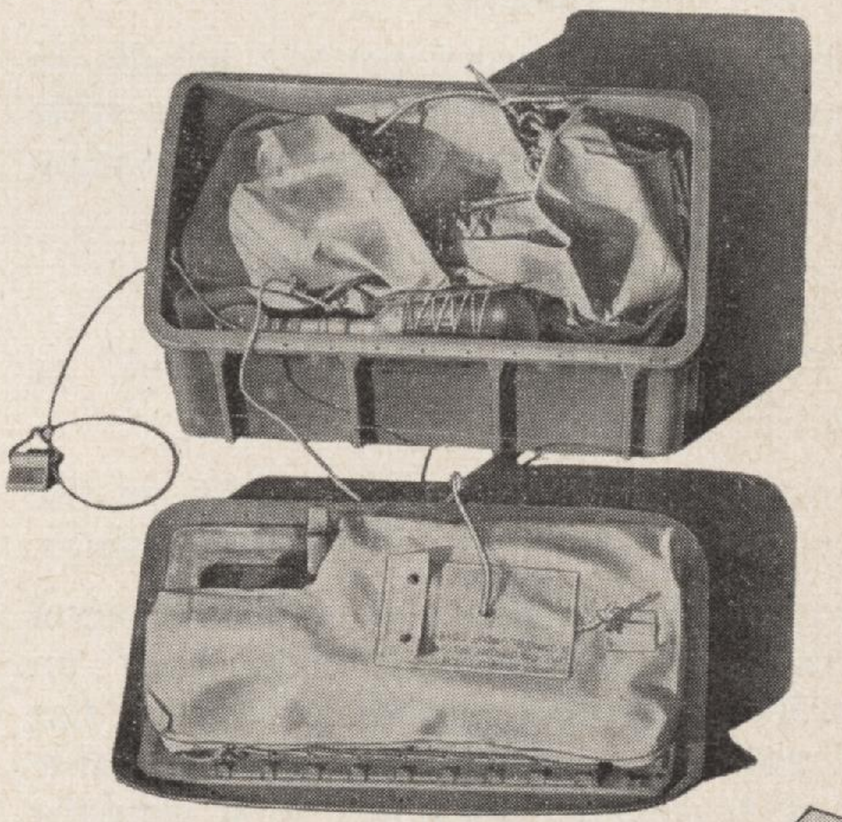

8

(8) Lift the dinghy into the box and connect the electrical plug to the

socket. Arrange the CO_2 bottle to rest against the sloping side of the box, and place the cover in position so that the transparent inspection cover is at the front end of the box and the steady pad over the neck of the CO_2 bottle. Secure the cover with the plate and bolts provided.

TARGET TOWING EQUIPMENT

138. On aircraft incorporating Mod. 1619 and Mod. 1627, the equipment consists of a target pack container, release units, target launching and target release controls ; provision is made for the carriage of three banner-type targets. Guards are fitted to the tail unit and forward of the tail wheel unit to prevent the towing cables fouling the control surfaces and tail wheel. The target launching control handles are situated on a control panel mounted on the port side of the wing deck. Toggles mounted on the navigator's floor, through cables, operate the release units. The installation and pre-flight testing of the equipment and the stowage of the targets is covered in Sect. 4, Chap. 2.

Target launch controls

139. To set the controls proceed as follows :—

(1) Ensure that the control handles on the control panel are in their housings.

(2) Set the Bowden cable adjusters until the latches of the target container door lock are engaged the full width of the door strikers.

(3) Operate each target control handle in turn and ensure that the latches slide clear of the strikers, thereby releasing the container doors.

Target release controls

140. To set the controls proceed as follows :—

(1) Ensure that the control toggles on the navigator's floor are in their housings.

(2) Adjust the turnbuckles on the control cables until the operating lever on each release unit abuts its stop and the rearmost portion of the control cable is up to 0·5 in. slack out of a straight line.

(3) Operate each control toggle in turn and ensure that the lever reaches the forward limit of its travel.

(4) Lock the turnbuckles.

Removal of target pack container

141. The procedure for removal is as follows :—

(1) Disconnect the Bowden cables at the adjusters on the forward end of the container.

(2) Disconnect the electrical cables at the 5-way terminal block on the forward face of the container.

(3) Withdraw the three pulleys from their brackets, at the rear end of the rear shelf, after removing the three pivot bolts, distance tubes, nuts and washers.

(4) Withdraw the rear shelf assembly, after removing the five nuts and bolts attaching it to the brackets mounted on the rear of the container and bulkhead No. 4.

(5) Remove the four nuts and bolts attaching the container stay tubes to the front and rear bomb crates.

(6) Remove the four nuts and bolts attaching the stay tubes to the container mounting eye-bolts.

(7) Remove the four eye-bolts and nuts and the four bolts and nuts attaching the container to the mounting assemblies ; the container can now be removed.

(8) Slacken off the four lock-nuts at the top of the mounting assemblies, then unscrew and withdraw the assemblies.

Removal of release units

142. To remove the release units proceed as follows :—

(1) Disconnect the operating cables by the removing of the split-pins and withdrawing the three connecting pins.

(2) Disconnect the twelve nuts and bolts securing the release units to the fuselage, then remove the units.

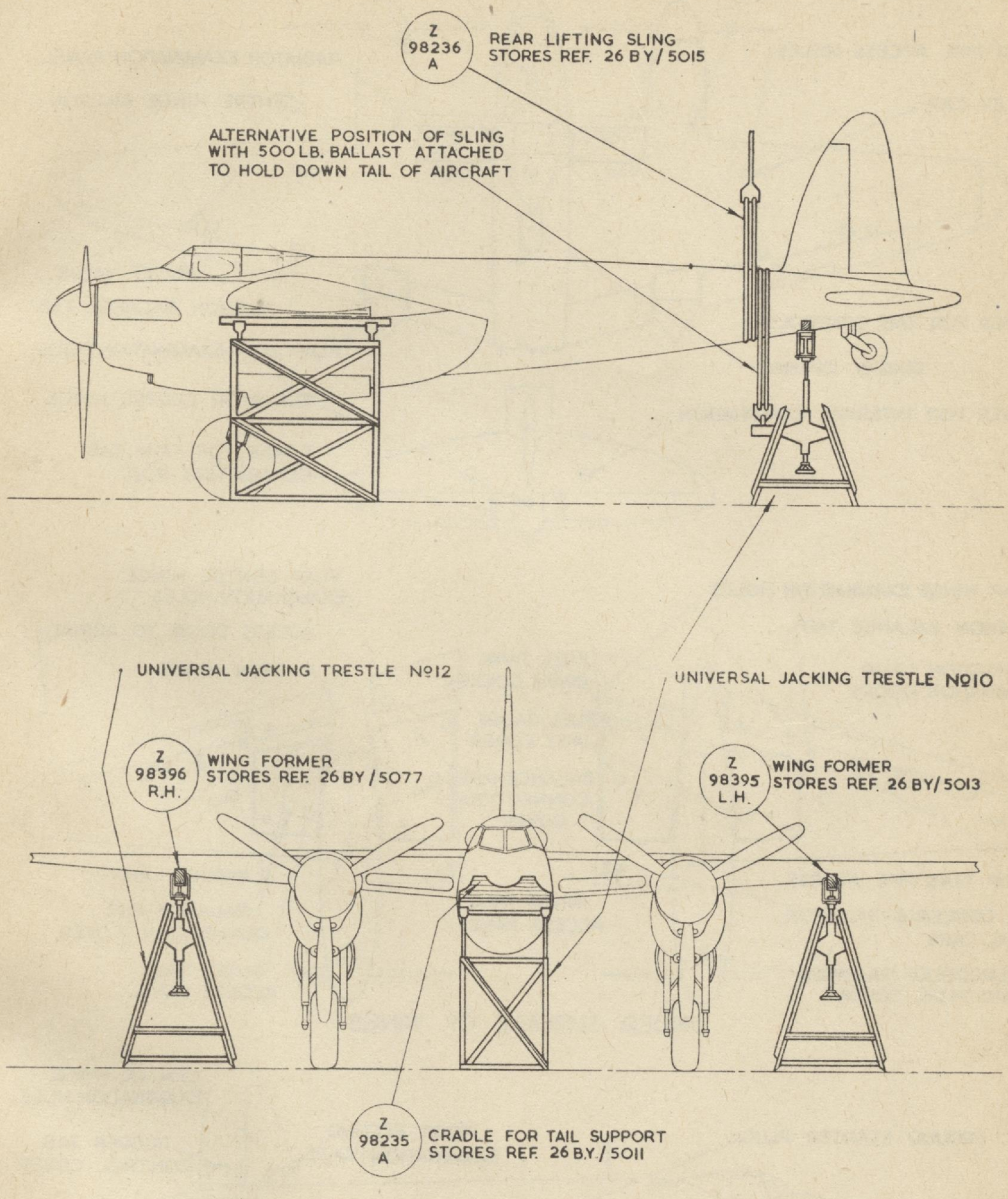

NOTE: TRESTLING AND SLINGING POSITIONS PAINTED ON AIRCRAFT

FIG. 4 TRESTLING FOR RIGGING

7876 68203 1/53 450 C.B.&S.LTD GP.55

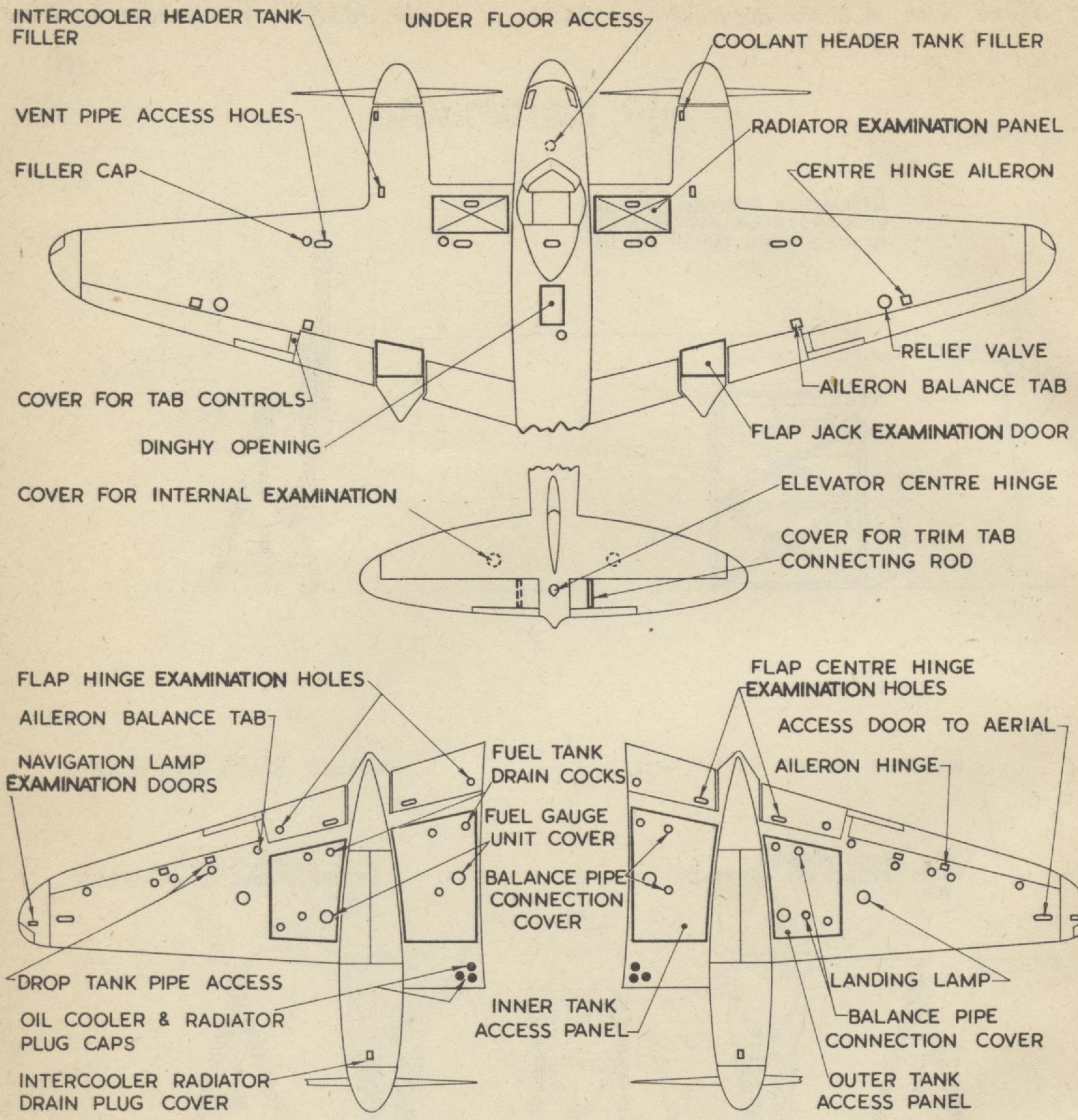

FIG. 5 ACCESS PANELS

7876 66203 1/53 450 C.B.& S. LTD. GR55

This leaf issued with A.L. No. 26, November, 1952

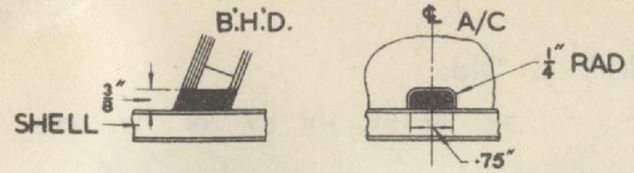

DETAIL "A"

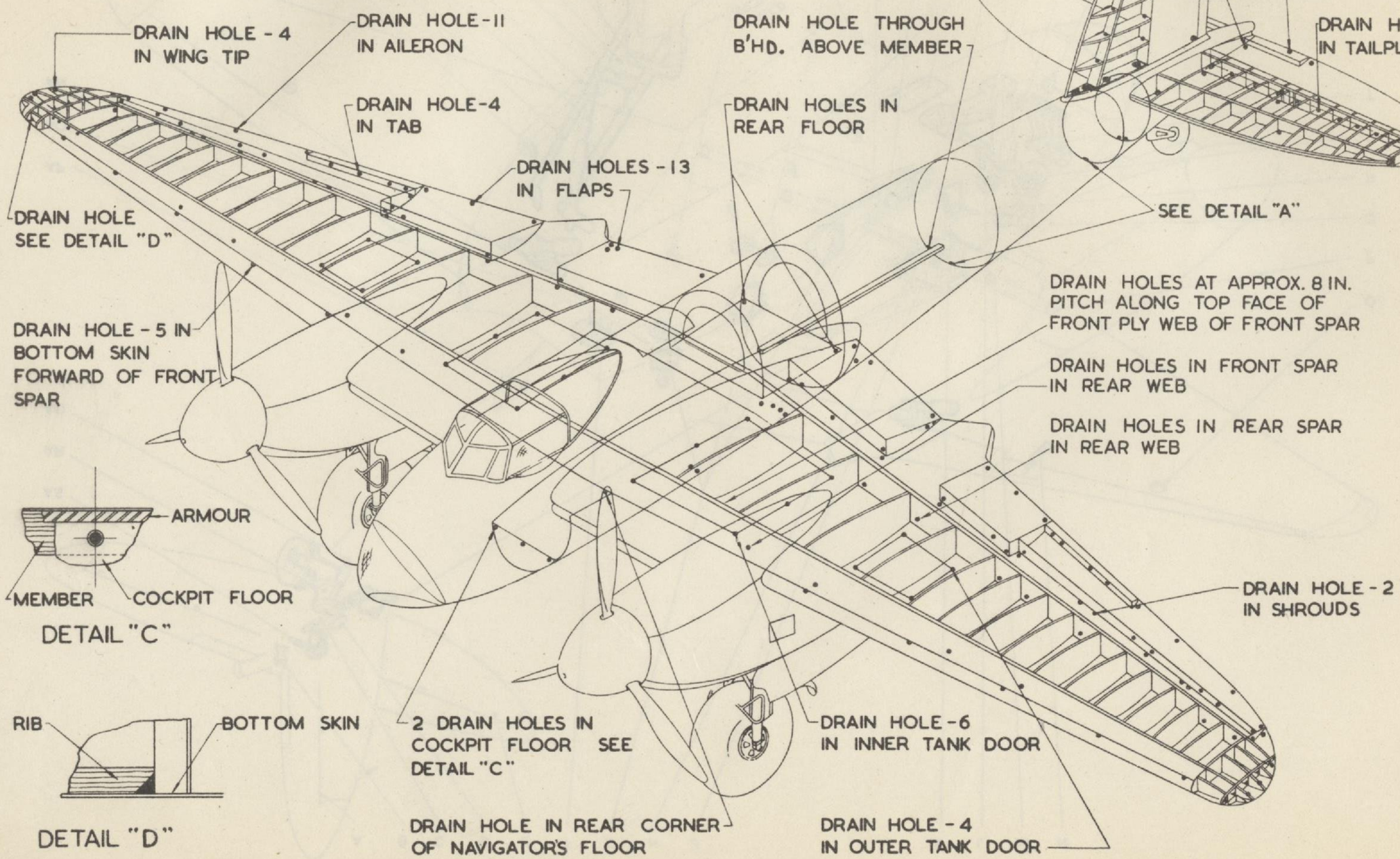

DETAIL "C"

DETAIL "D"

FIG. 6 LOCATION OF DRAIN HOLES

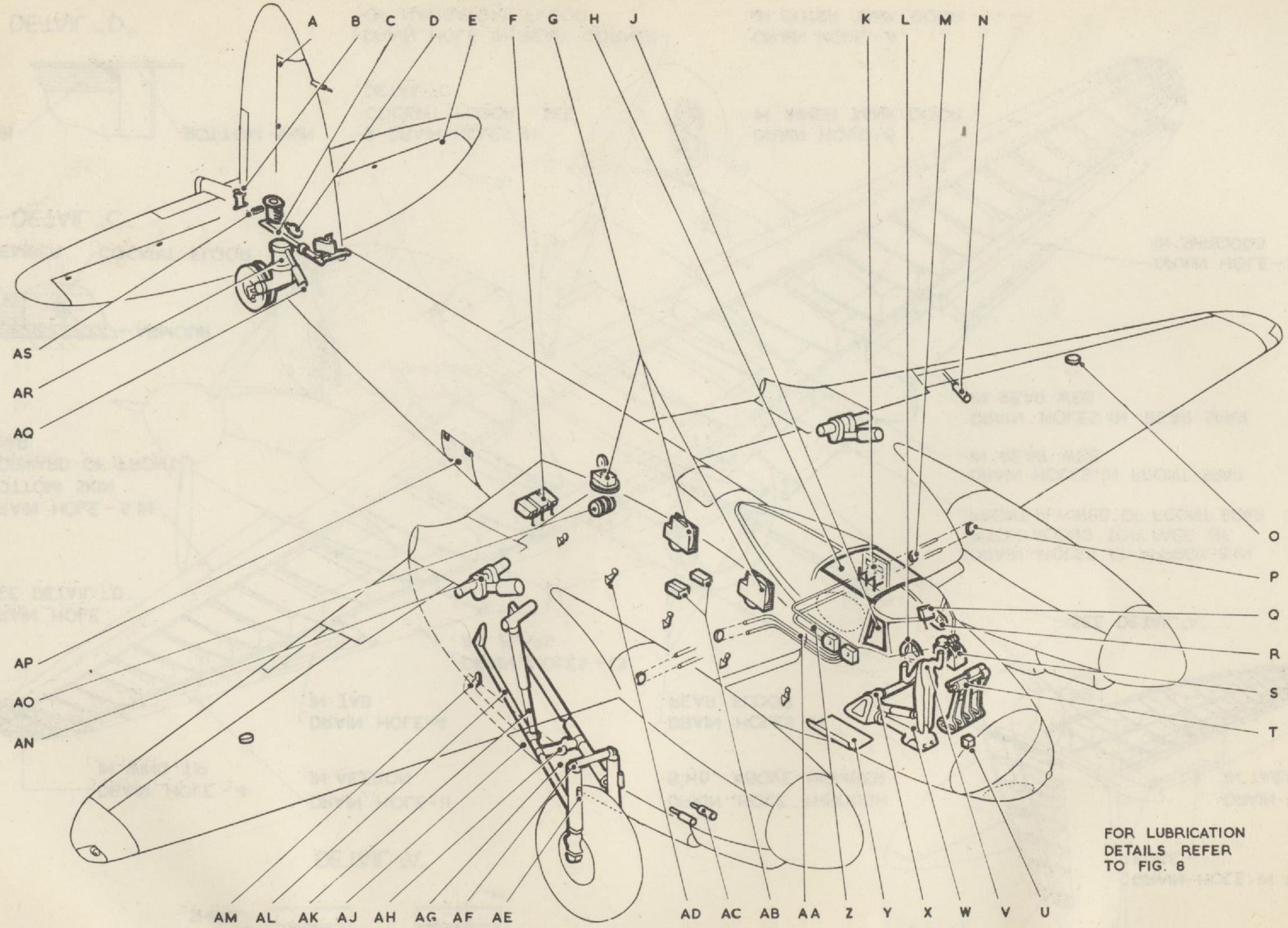

FIG. 7 LUBRICATION DIAGRAM

KEY TO FIG. 7 (LUBRICATION DIAGRAM)

A RUDDER HINGES, BALL RACE AT BASE OF RUDDER TRIM TORQUE TUBE (3) ●

B ELEVATOR TRIM JACK—REFER TO FIG. 8 (1) —● SPROCKET AND CHAIN (2) ●

C RUDDER SPRING STRUT—REFER TO FIG. 8 (1) —●

D RUDDER TRIM JACK (7) —●

E ELEVATOR HINGES (4) ●

F RELEASE UNIT, PIVOTS AND CABLE PINS (15) ● (Mod. 1619, 1627)

G BOMB WINCHES (3) ● ▣ (if fitted)

H EMERGENCY EXIT LATCHES, PULLEYS AND CABLES (13) ●

J DIRECT VISION SIDE PANELS, HINGES AND CATCHES (6) ●

K TARGET LAUNCH CONTROL HANDLES (3) ▣ (Mod. 1619, 1627)

L ELEVATOR TRIM CHAIN (1) ●

M RADIATOR FLAP SCREW JACK, BOLT, BALL RACES AND CHAIN (22) —●

N AILERON TRIM JACK (PORT ONLY) (4) ●

O AILERON DIFFERENTIAL BALL RACES (8) ●

P CONTROLS IN P.P., BALL RACES, SHACKLE PINS, CHAIN AND SPROCKETS (36) ●

Q RUDDER TRIM TELEFLEX CONTROLS (2) —▣

R ELEVATOR TRIM INDICATOR, BOWDEN CABLE IN COCKPIT (1) ▲

S ENGINE CONTROL ROD SHACKLE PINS (6) ●

T RUDDER PEDAL BALL RACES, LINKS AND CONTROL CABLE SHACKLES (6) ●

U BOWDEN CABLE TO BRAKE DIFFERENTIAL UNIT (1) ▲

V CONTROL COLUMN, BALL RACES, CHAINS AND SPROCKETS (5) ●

W BALL JOINT AND BALL RACE ON TORQUE TUBE (2) ●

X ELEVATOR LAYSHAFT AND CONNECTING TUBE BALL RACES (3) ●

Y COCKPIT DOOR HINGES (6) ●

Z PORT RADIATOR FLAP TELEFLEX CONTROL (2) —▣

AA STARBOARD RADIATOR FLAP TELEFLEX CONTROL (2) —▣

AB TARGET PACK CONTAINER DOOR LOCKS (3) ● (Mod. 1619, 1627)

AC AIR-INTAKE SHUTTER HINGES AND LINKAGE (32) ●

AD VENTRAL DOOR HINGES (10) ●

AE CABLE ROLLERS ON SHOCK ABSORBERS (4) ●

AF SHOCK-ABSORBER STRUT ATTACHMENT, REFER TO FIG. 8 (4) —●

AG CABLE ROLLERS IN WHEEL DOORS (4) ●

AH WHEEL DOOR OPERATING PULLEY (4) ●

AJ WHEEL DOOR RUBBING STRIP (4) ▣

AK UNDERCARRIAGE JACK ATTACHMENTS, TOP (2) BOTTOM (2) REFER TO FIG. 8 —●

AL UNDERCARRIAGE RADIUS RODS, TOP (4), CENTRE (4), BOTTOM (4)—REFER TO FIG. 8 —●

AM WHEEL DOOR HINGES (8) ●

AN FLAP JACK, REFER TO FIG. 8 (4) —●

AO ALL PULLEYS IN ELEVATOR CONTROL RUNS—REFER TO SECT. 7, CHAP. 4 (9) ● ALL PULLEYS IN RUDDER CONTROL—REFER TO SECT. 7, CHAP. 4 (9) ●

AP REAR DOOR HINGES AND LOCKS (4) ●

AQ TAIL WHEEL JACK—REFER TO FIG. 8 (2) —●

AR TAIL WHEEL UNIT—REFER TO FIG. 8 (9) —● SLIDE AT TAIL WHEEL JACK ATTACHMENT ●

AS GREASE BAG ON ELEVATOR TORQUE SHAFT LEVER (1) ▣ TORQUE SHAFT LEVER, TOP (1) ◆ BOTTOM (1) ◆

Note.

Numbers in brackets indicate number of points requiring lubrication.

Oil piano hinges of elevator, rudder and aileron trim tabs and radiator flaps (7) ●

Pack undercarriage and tailwheels with grease when re-assembling ■

Pack radiator flap control boxes with grease when re-assembling ■

◆ —Felt washers fitted at these points. Washers should be examined, and, if they require replacement, bearings should be re-packed with grease if necessary prior to fitting new washers.

—● Gun lubrication.

● —Anti-freeze lubricating oil OM-150 (D.T.D. 417A) Stores Ref. 34B/87

▣ —Low temperature grease XG-275 (D.T.D.825) Stores Ref. 34B/222

■ —High temperature grease XG-270 (D.T.D.900) Stores Ref. 34B/196

▲ —Grease ZX-12 (B.S.M.20) Stores Ref. 34D/94

RESTRICTED

7875 68202 1/53 450 C.B.&S.LTD. GP.30

REAR SPAR

FLAP SHROUD

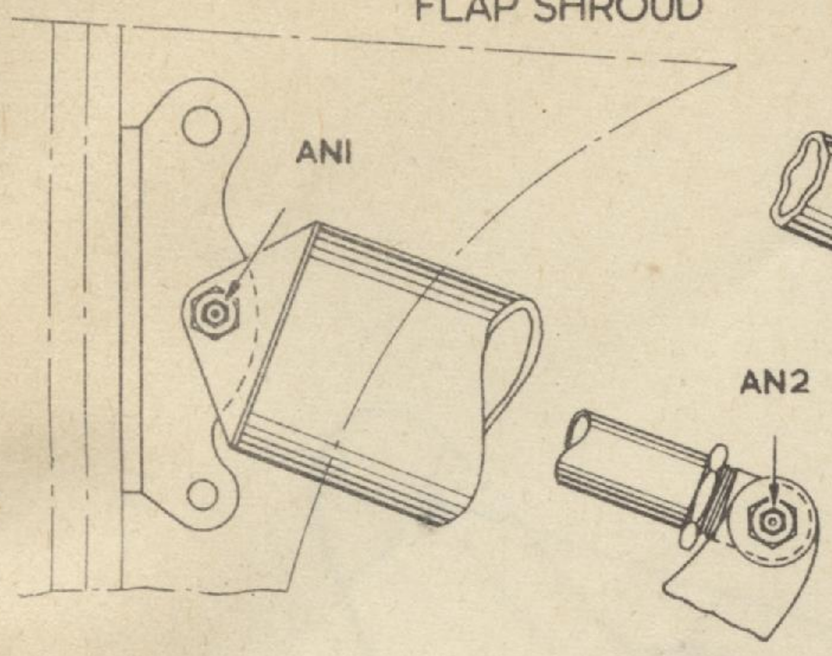

U/C JACK PISTON ROD

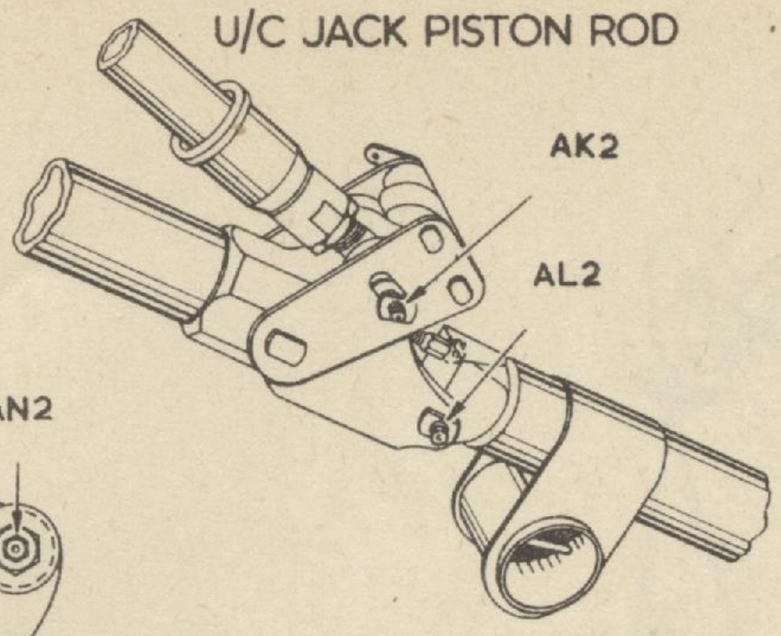

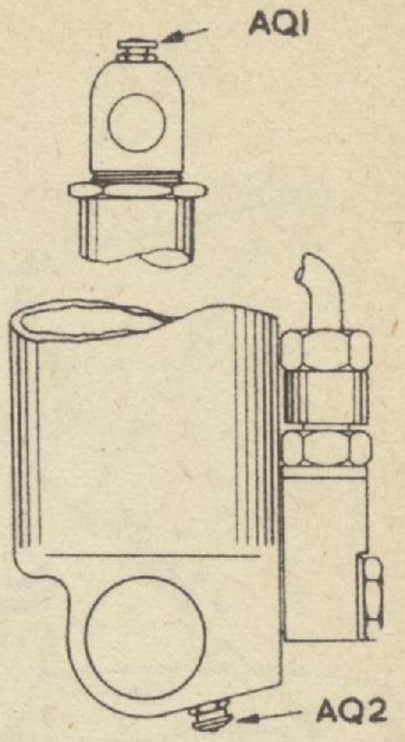

FLAP JACK

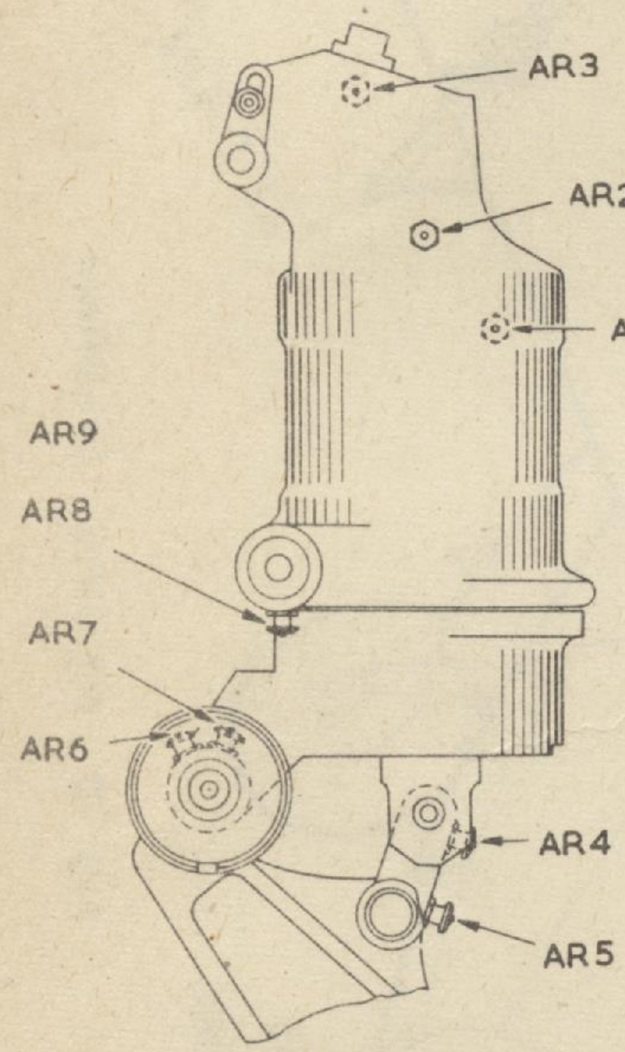

TAIL WHEEL UNIT

UNDERCARRIAGE DOWN STOP

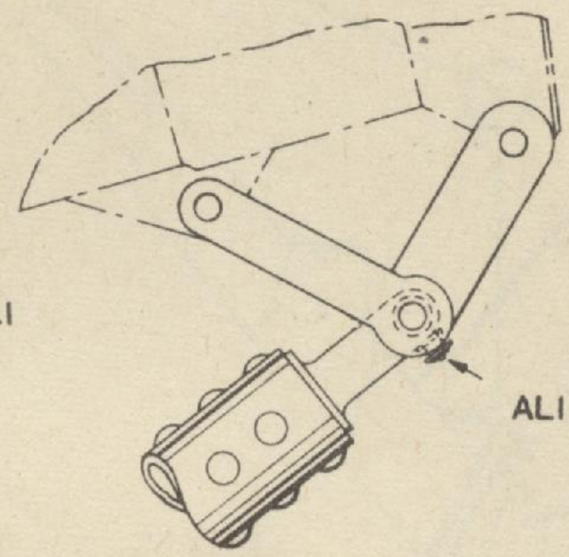

RADIUS ROD UPPER ATTACHMENT

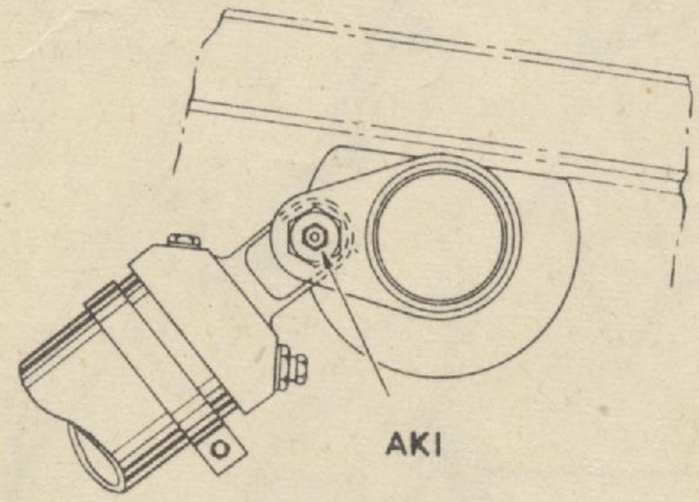

TAIL WHEEL JACK

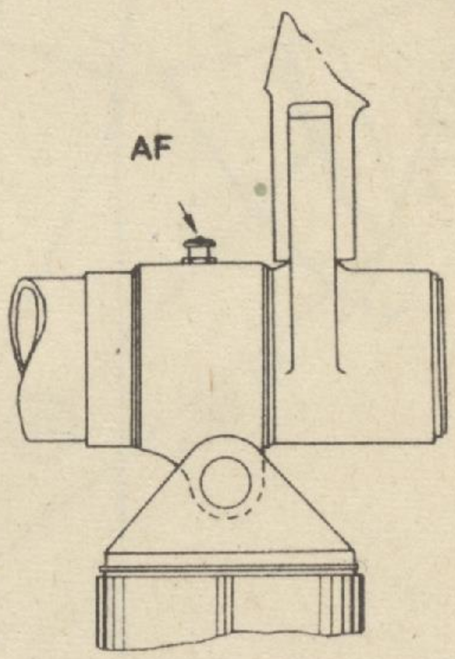

SHOCK-ABSORBER STRUT COLLAR

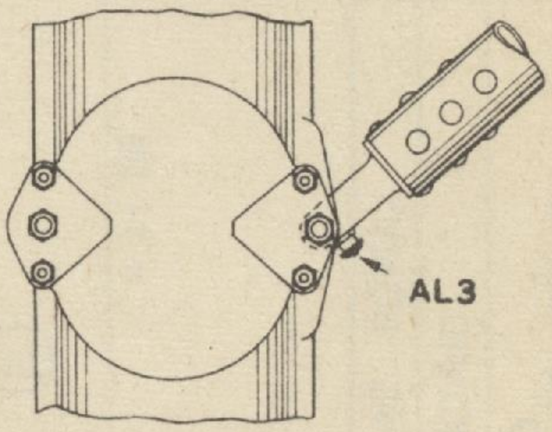

HINGE POINT OF RADIUS ROD ON SHOCK-ABSORBER STRUT

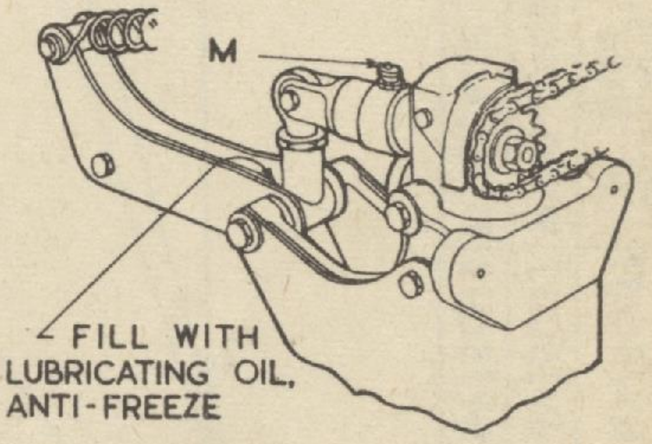

RADIATOR FLAP SCREW JACK

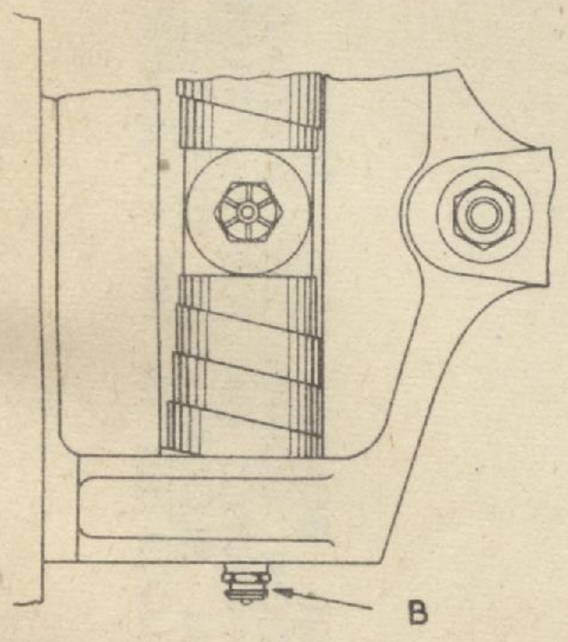

ELEVATOR TRIM JACK

UNDERCARRIAGE JACK UPPER ATTACHMENT

FOR LUBRICATION DIAGRAM & KEY TO REFERENCES, SEE FIG. 7

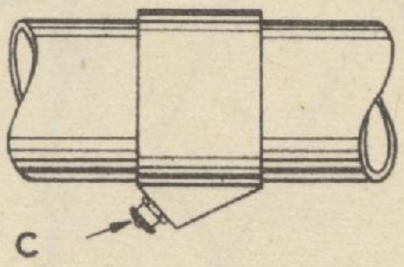

RUDDER SPRING STRUT

FIG. 8 LUBRICATION DETAILS

7876 68203 1/53 450 C.B.&S. Ltd. Gp.55

A	26 BY/17023	WING INCIDENCE, FLAP AND AILERON SETTING FRAME. FOR RIBS 2 AND 10
B	26 BY/5037	TAILPLANE INCIDENCE BOARD FOR RIBS 3 AND 9
C	26 BY/5017	WING DIHEDRAL BOARD
D	26 BY/5019	FUSELAGE LEVELLING BOARD

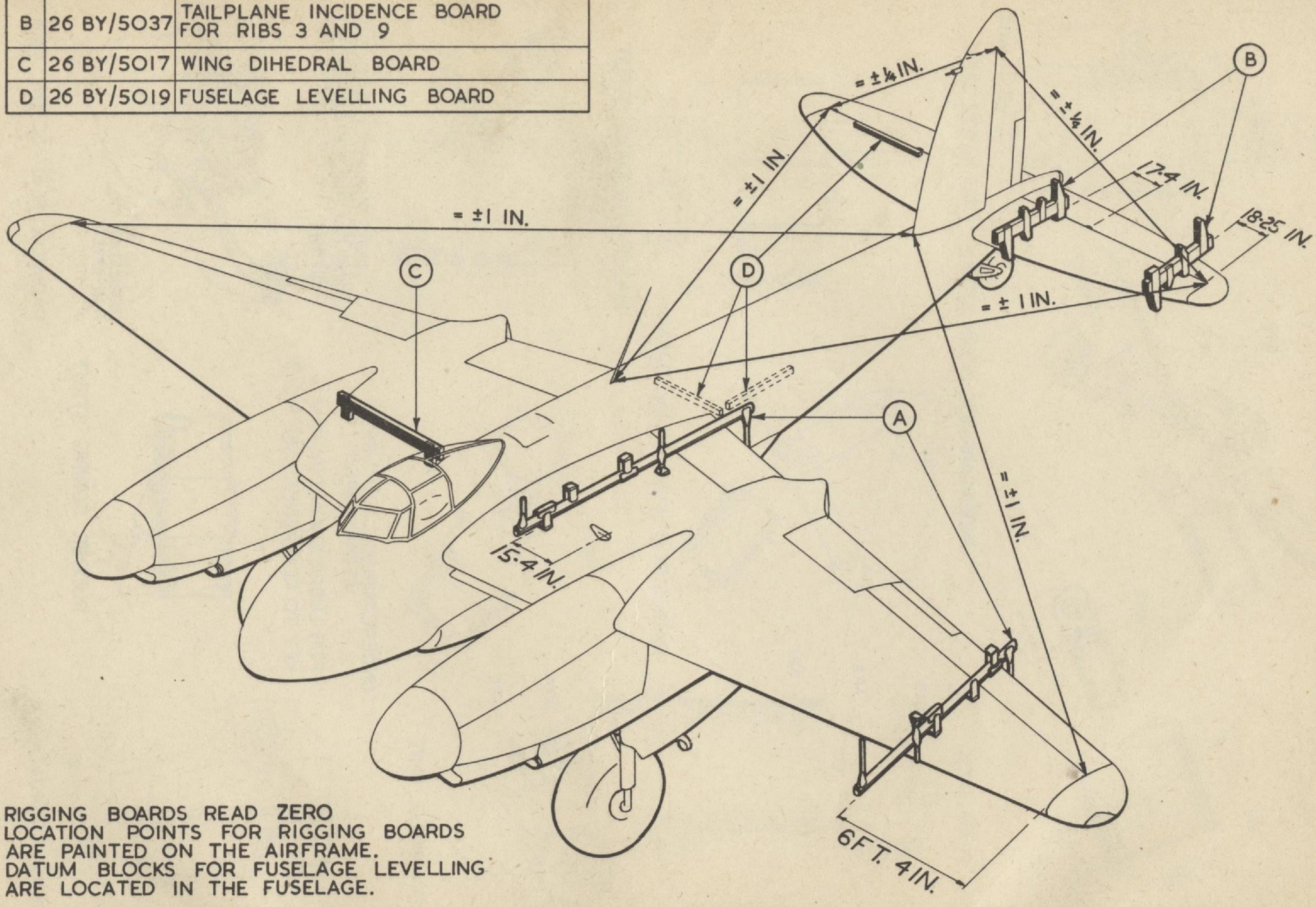

RIGGING BOARDS READ ZERO
LOCATION POINTS FOR RIGGING BOARDS ARE PAINTED ON THE AIRFRAME.
DATUM BLOCKS FOR FUSELAGE LEVELLING ARE LOCATED IN THE FUSELAGE.

FIG. 9 RIGGING DIAGRAM

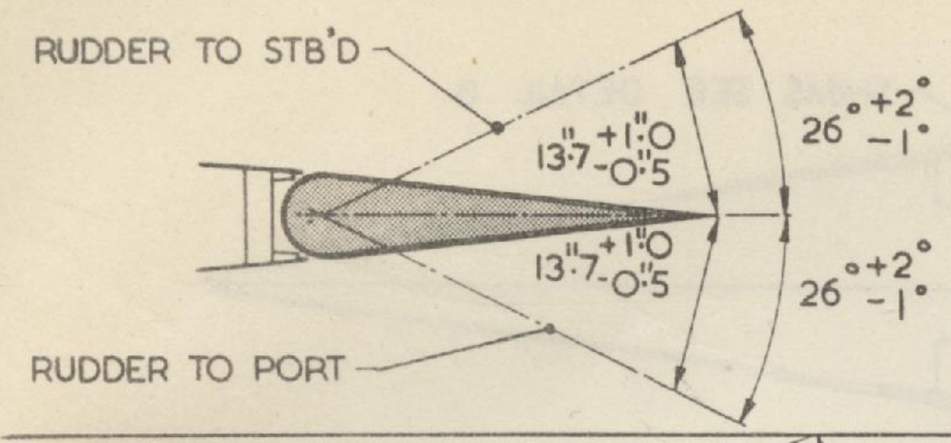

RUDDER MOVEMENTS

LINEAR DIMENSION IS MEASURED AT BASE OF RUDDER

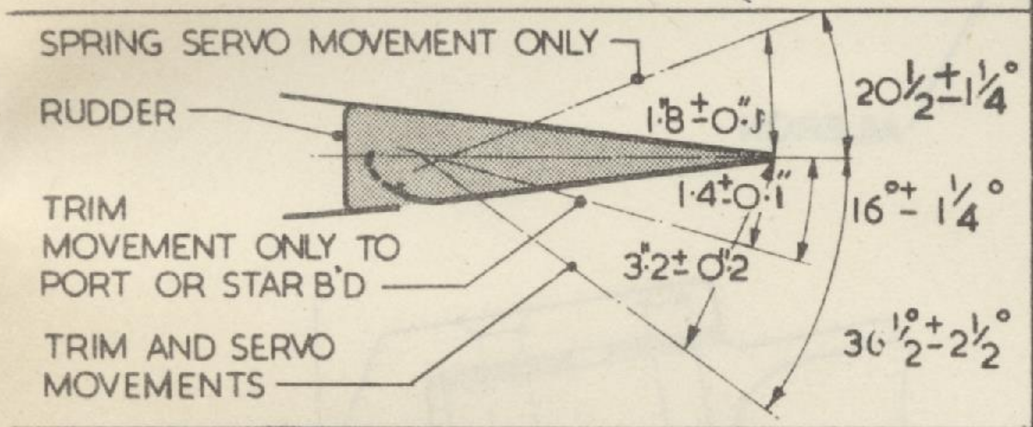

RUDDER TAB MOVEMENTS

LINEAR AND ANGULAR DIMENSIONS ARE MEASURED AT TRAILING EDGE

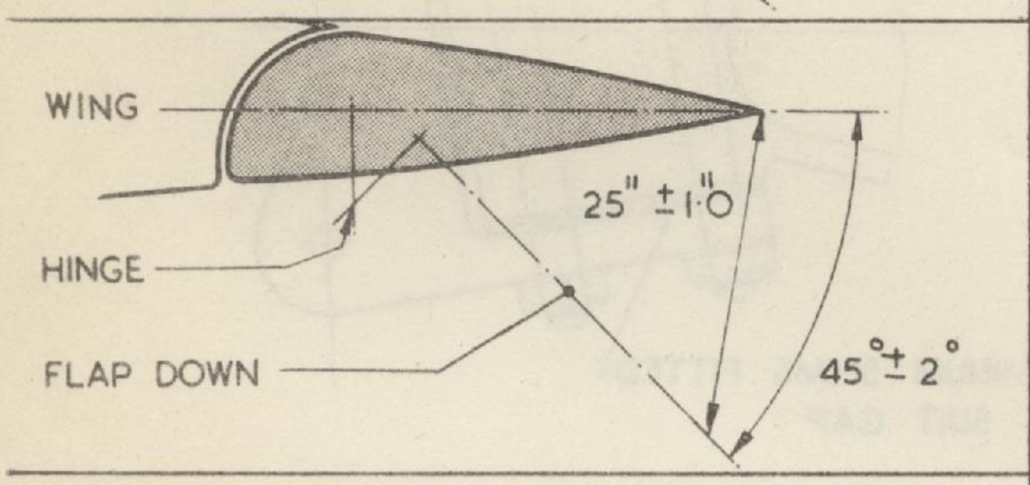

FLAP MOVEMENTS

LINEAR DIMENSIONS MEASURED AT ROOT END

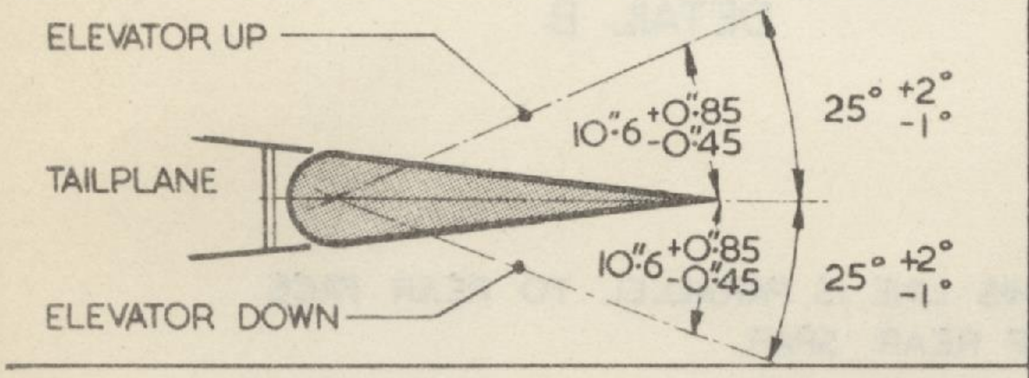

ELEVATOR MOVEMENTS

LINEAR DIMENSIONS MEASURED AT ROOT END

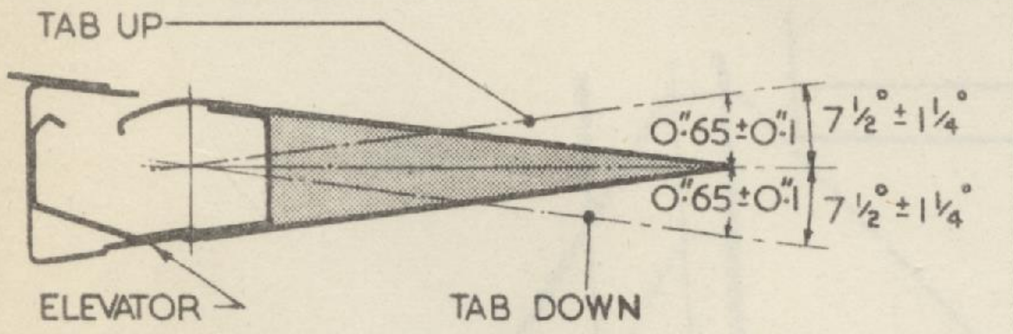

ELEVATOR TAB MOVEMENTS

LINEAR DIMENSIONS MEASURED AT TRAILING EDGE

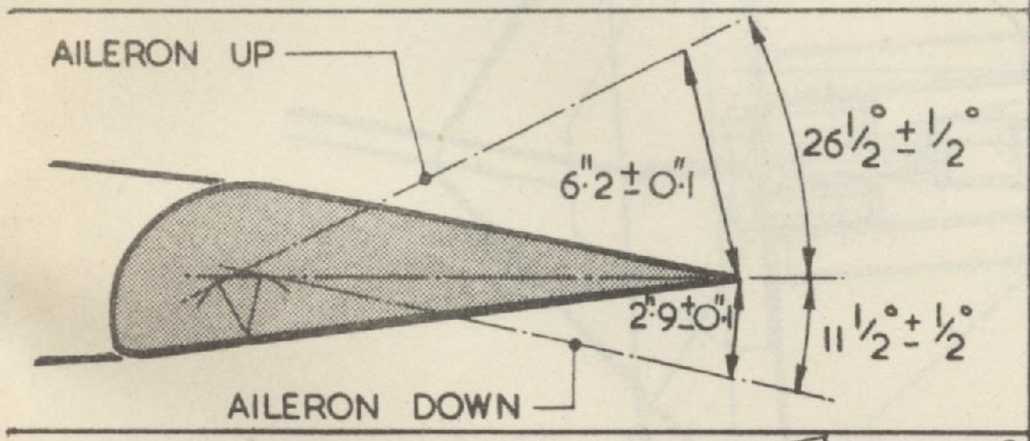

AILERON MOVEMENTS

LINEAR AND ANGULAR DIMENSIONS MEASURED AT RIB 6

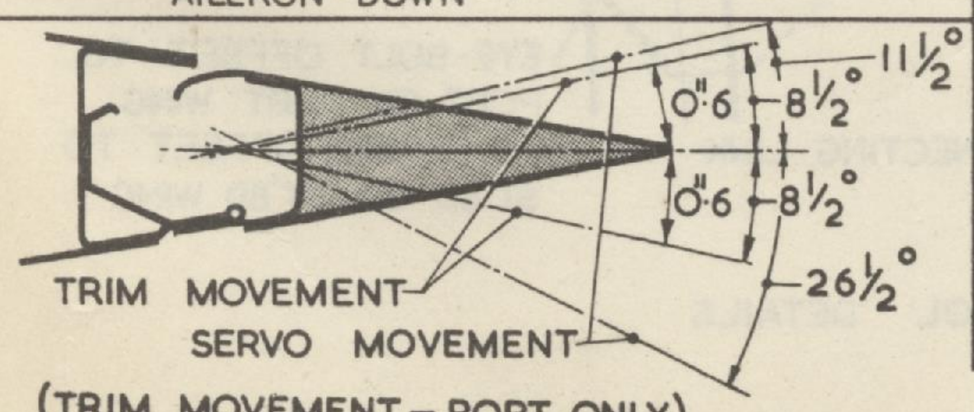

AILERON TAB MOVEMENTS

LINEAR DIMENSION MEASURED AT TRAILING EDGE

FIG. 10 CONTROL SURFACE MOVEMENTS

RESTRICTED

7876 66203 1/53 450 C.B. & S. LTD. GP.55

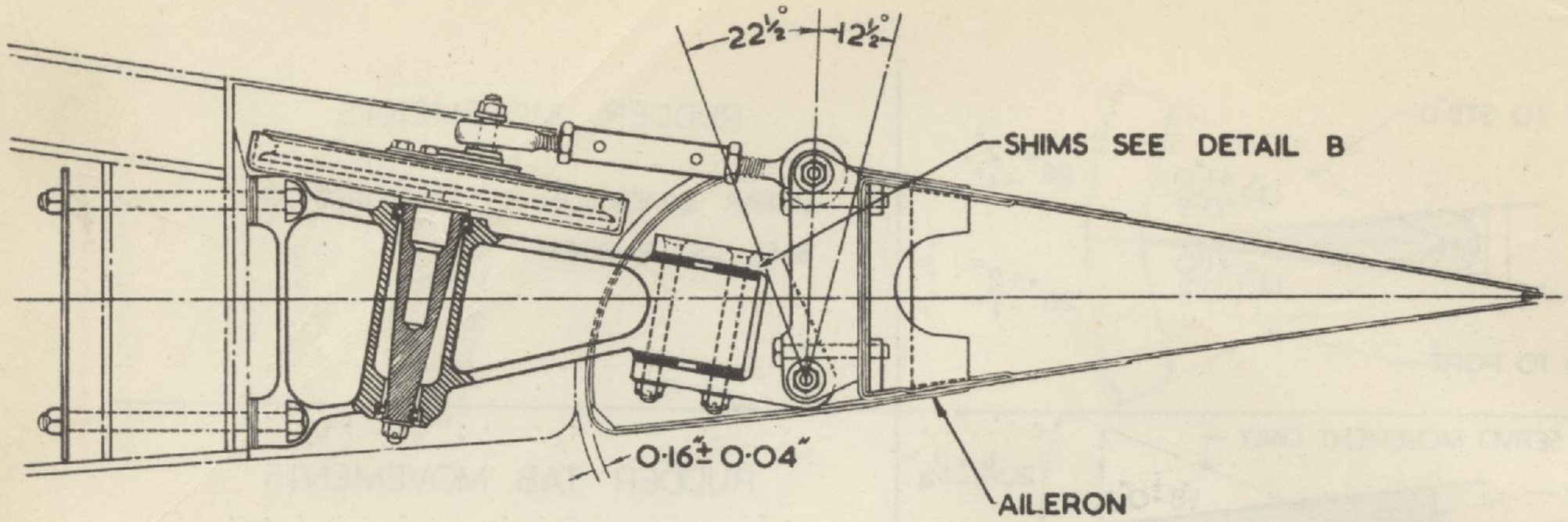

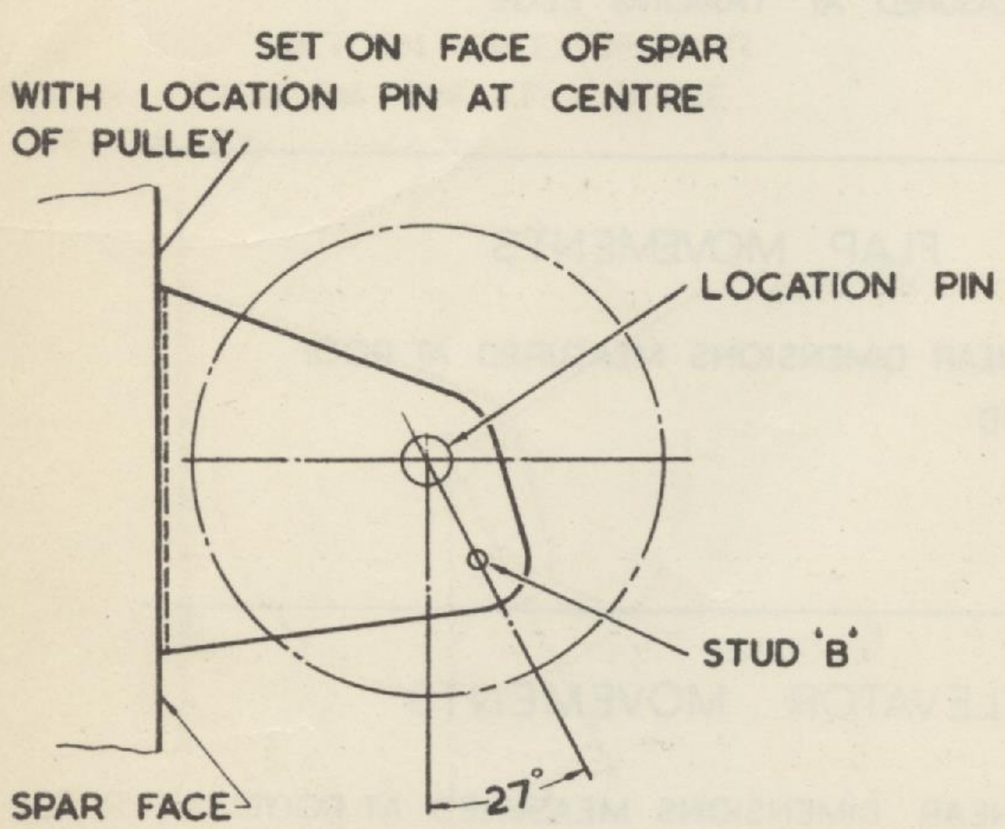

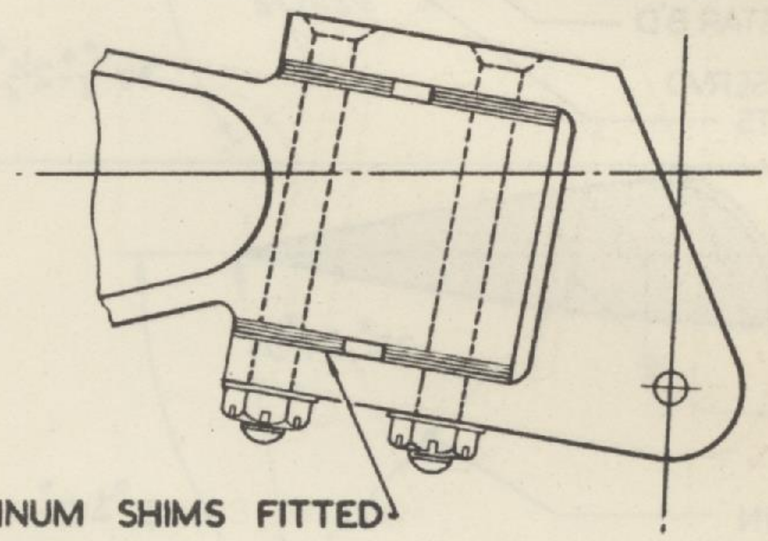

DETAIL B.

DETAIL . A .

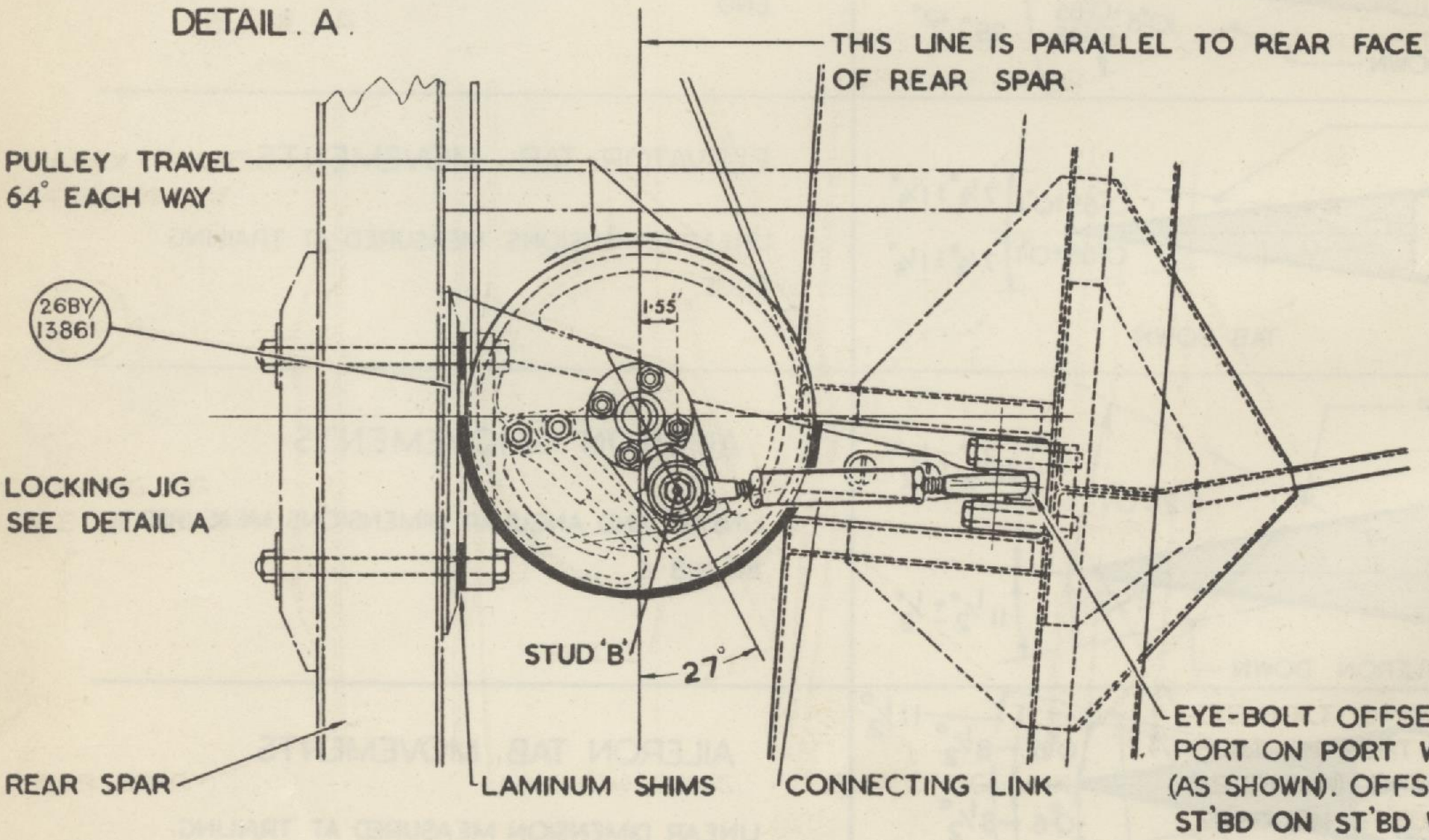

FIG. 11 AILERON CONTROL DETAILS

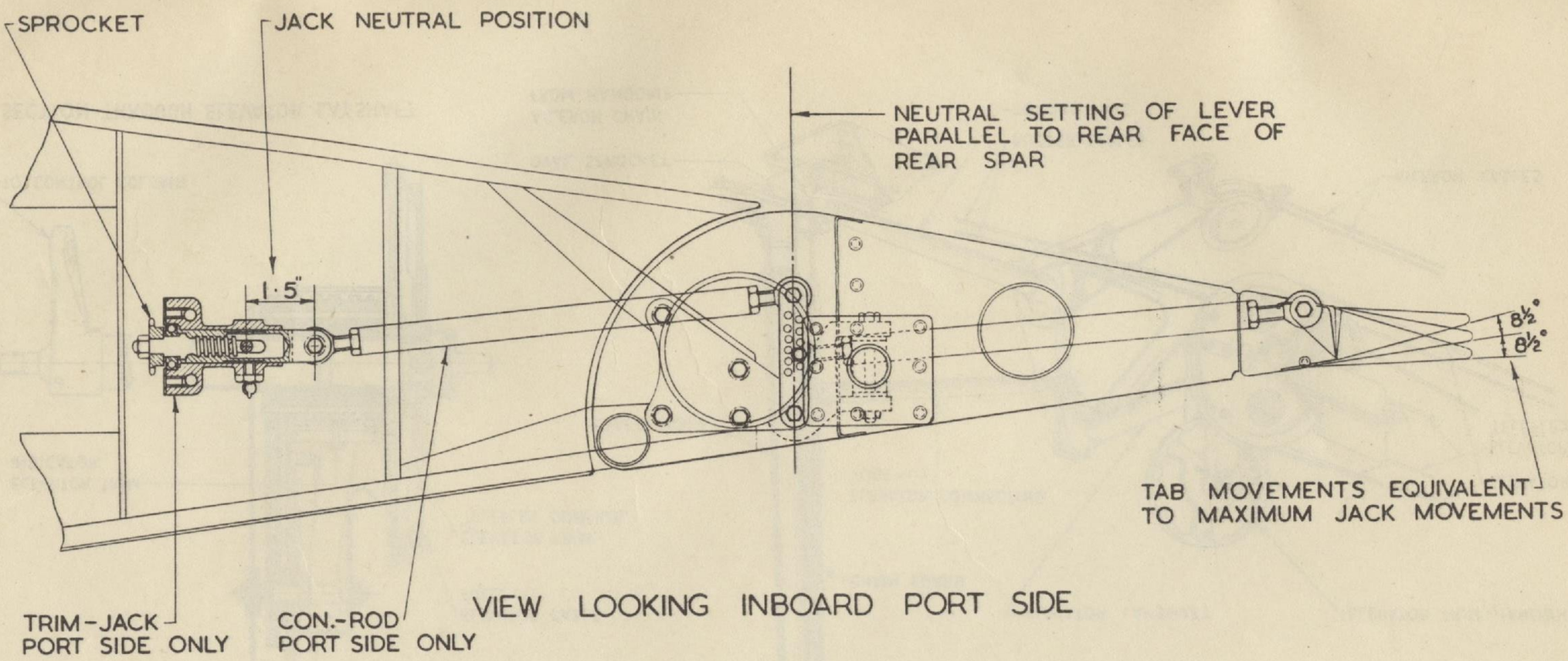

VIEW LOOKING INBOARD PORT SIDE

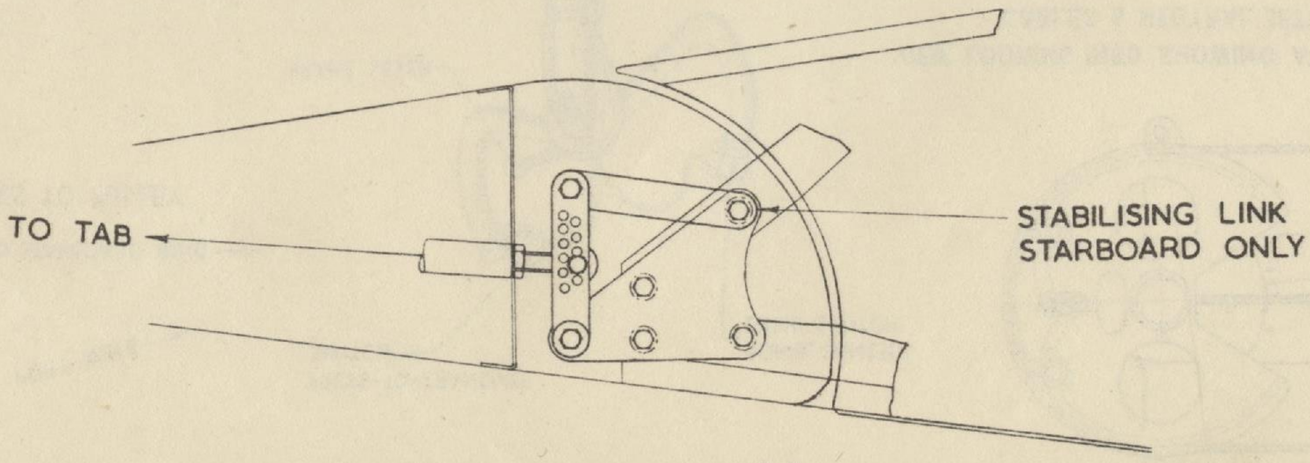

VIEW LOOKING INBOARD ST'B'D. SIDE

FIG. 12 AILERON TRIM AND BALANCE CONTROLS

G1371 M12243 7/49 550 C.B.& S.LTD. GP55.

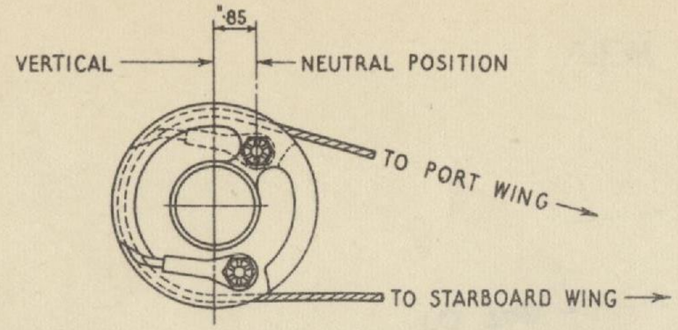

ATTACHMENT OF AILERON CABLES TO PULLEY

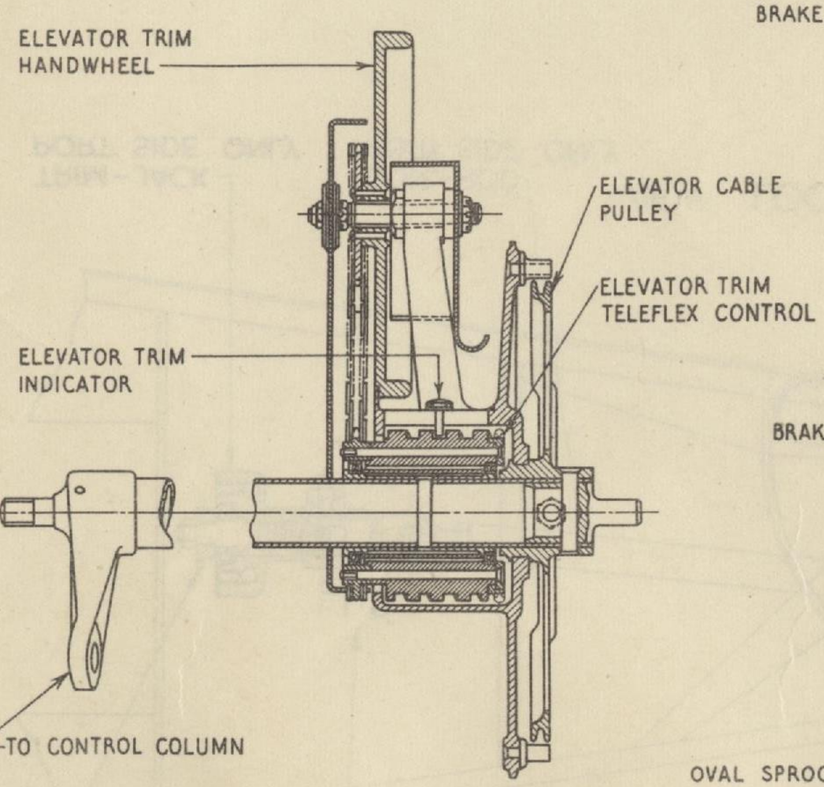

SECTION THROUGH ELEVATOR LAYSHAFT

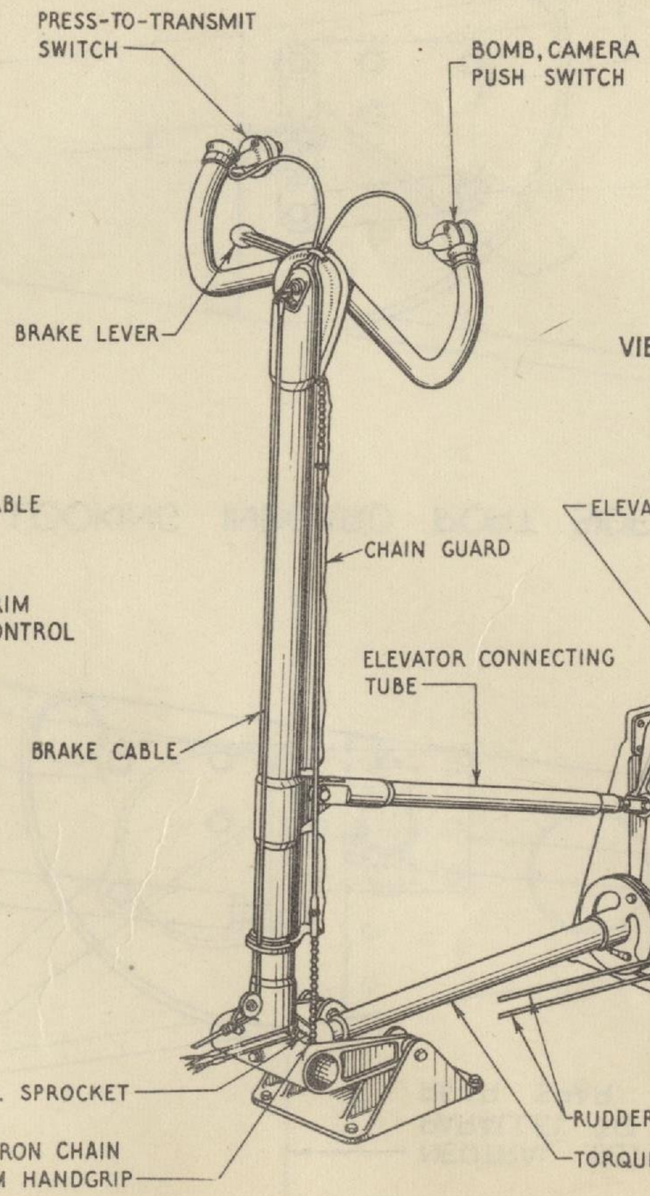

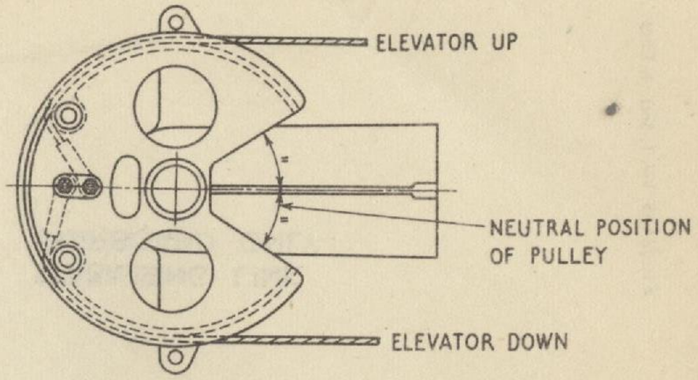

VIEW LOOKING INB'D SHOWING ATTACHMENT OF ELEVATOR CABLES & NEUTRAL SETTING OF PULLEY

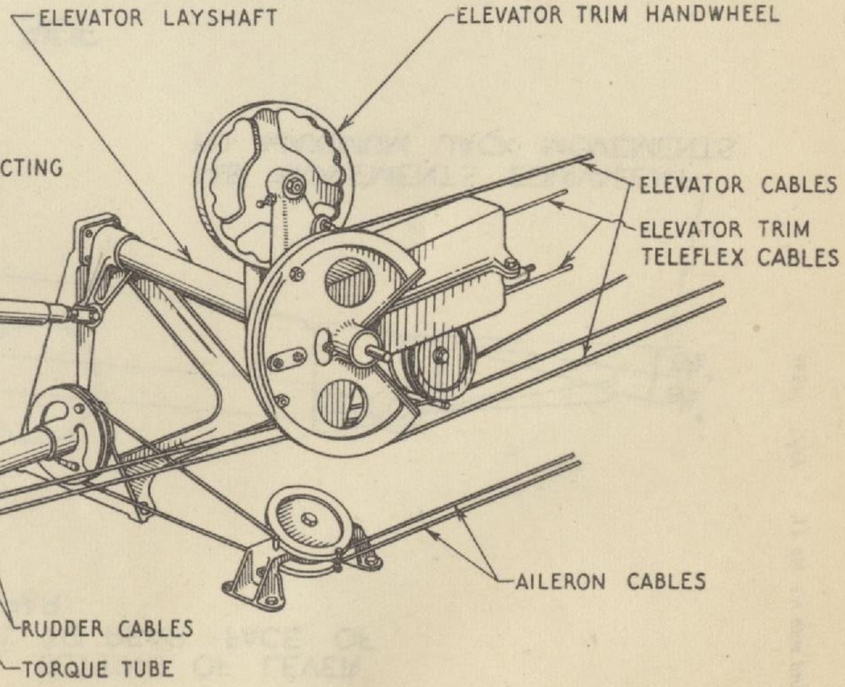

FIG. 13 AILERON AND ELEVATOR CONTROLS IN COCKPIT

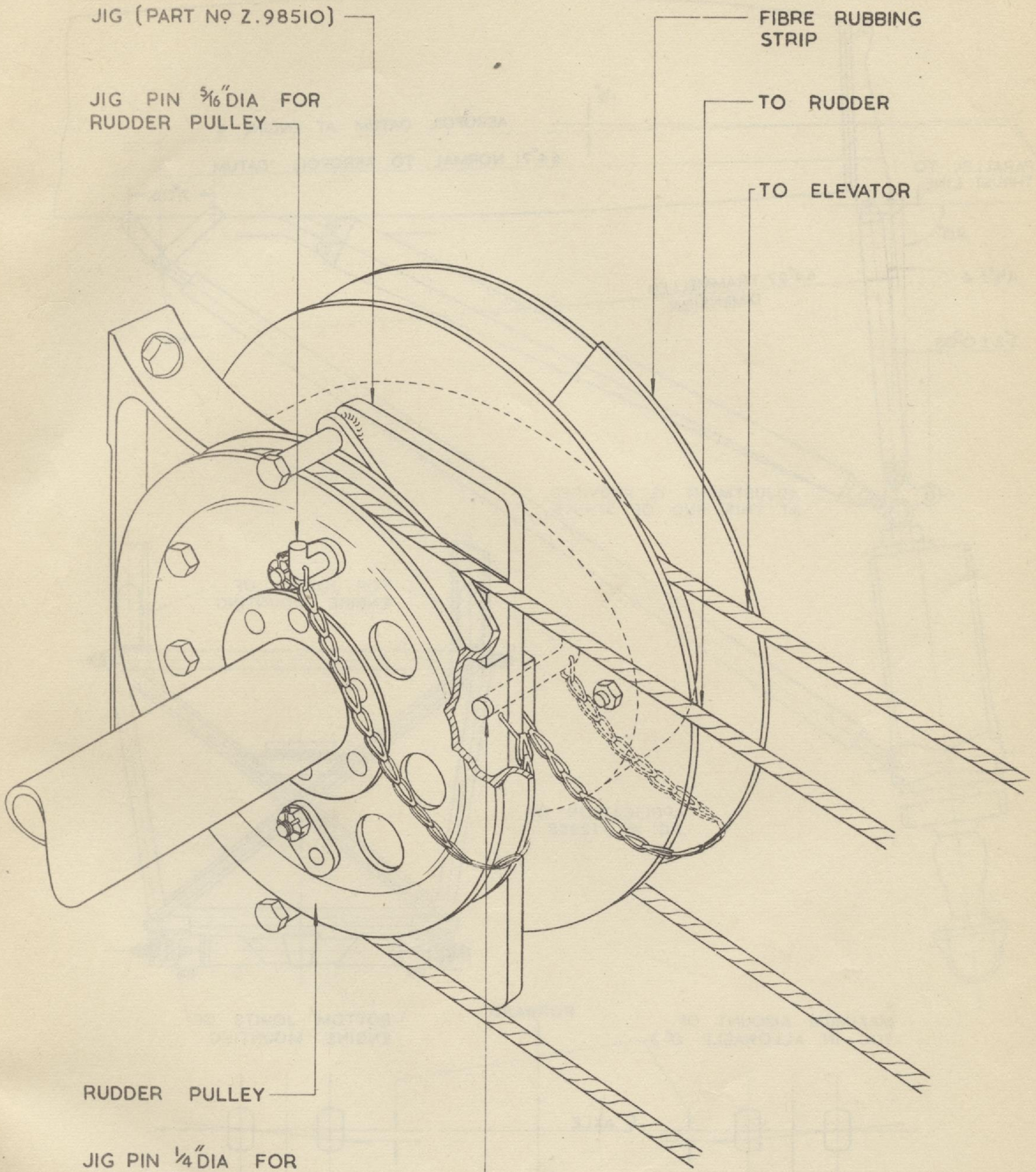

FOR RUDDER CONTROLS
SEE SECT. 7 CHAP. 4

FOR ELEVATOR CONTROLS
SEE SECT. 7 CHAP. 4

FIG. 14 JIG FOR RUDDER AND ELEVATOR PULLEYS ON BULKHEAD NO. 4

G1371 M24243 7/49 550 C.B.& S.LTD. GP.55.

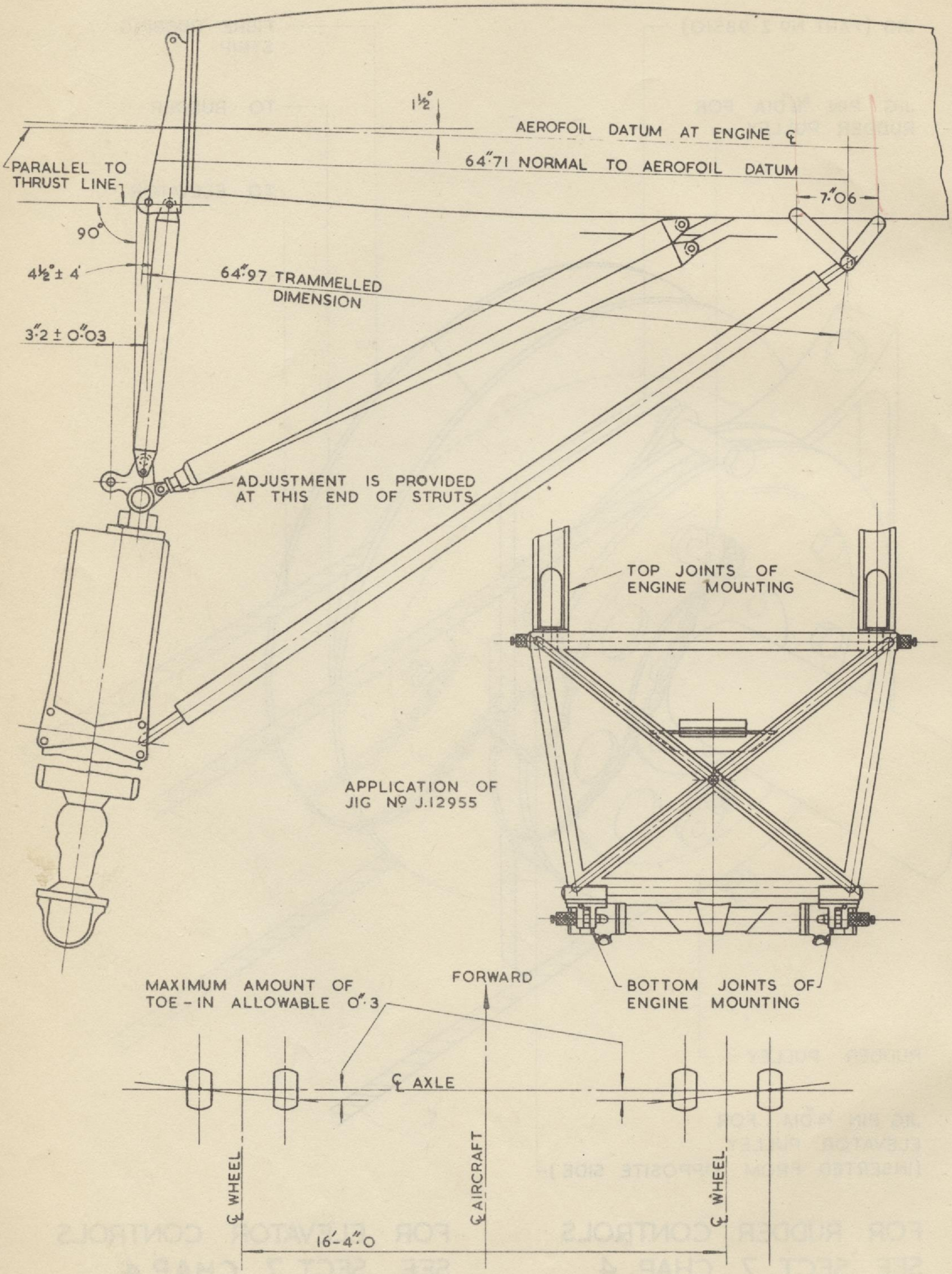

FIG. 15 WHEEL ALIGNMENT CHECK

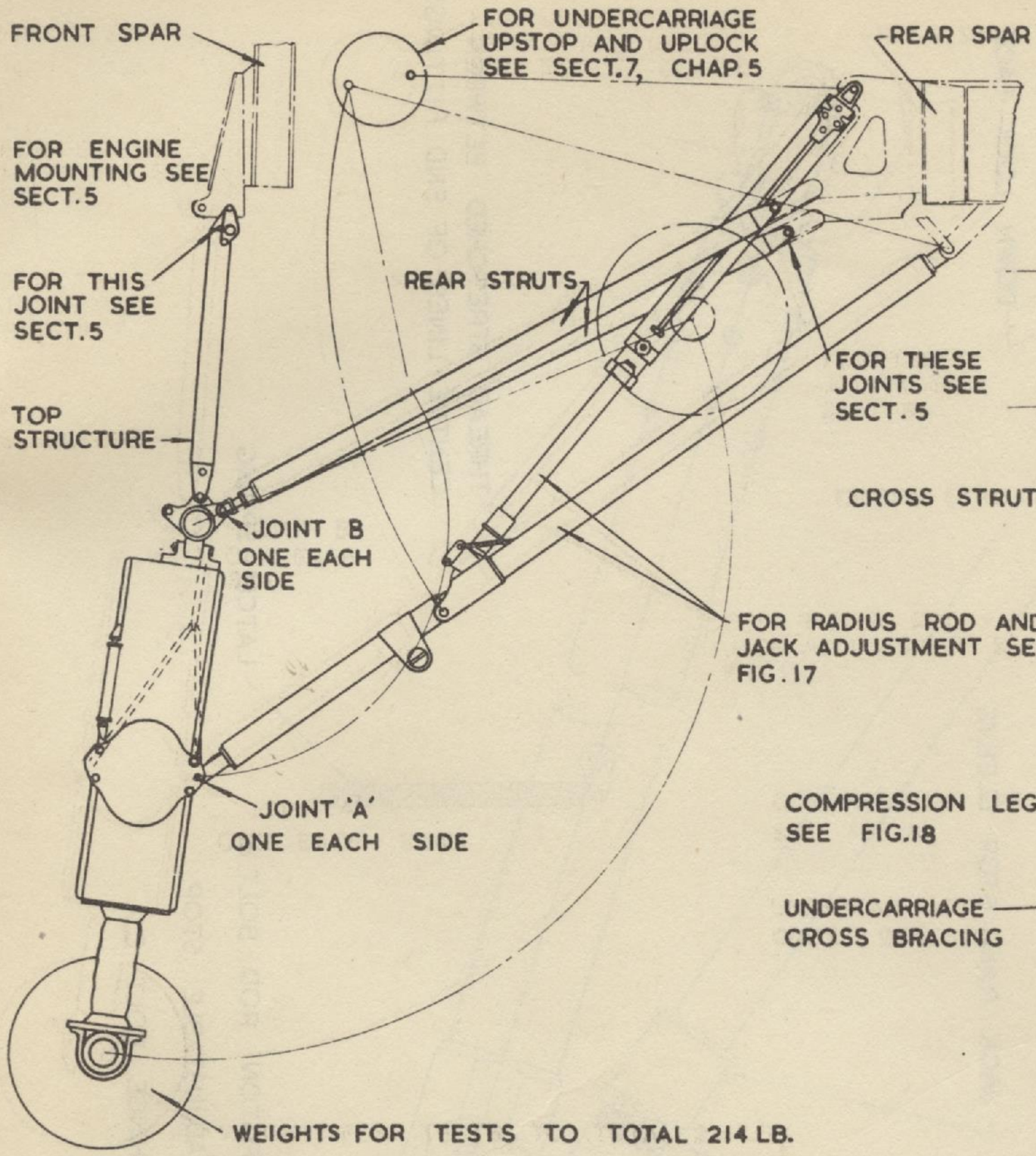

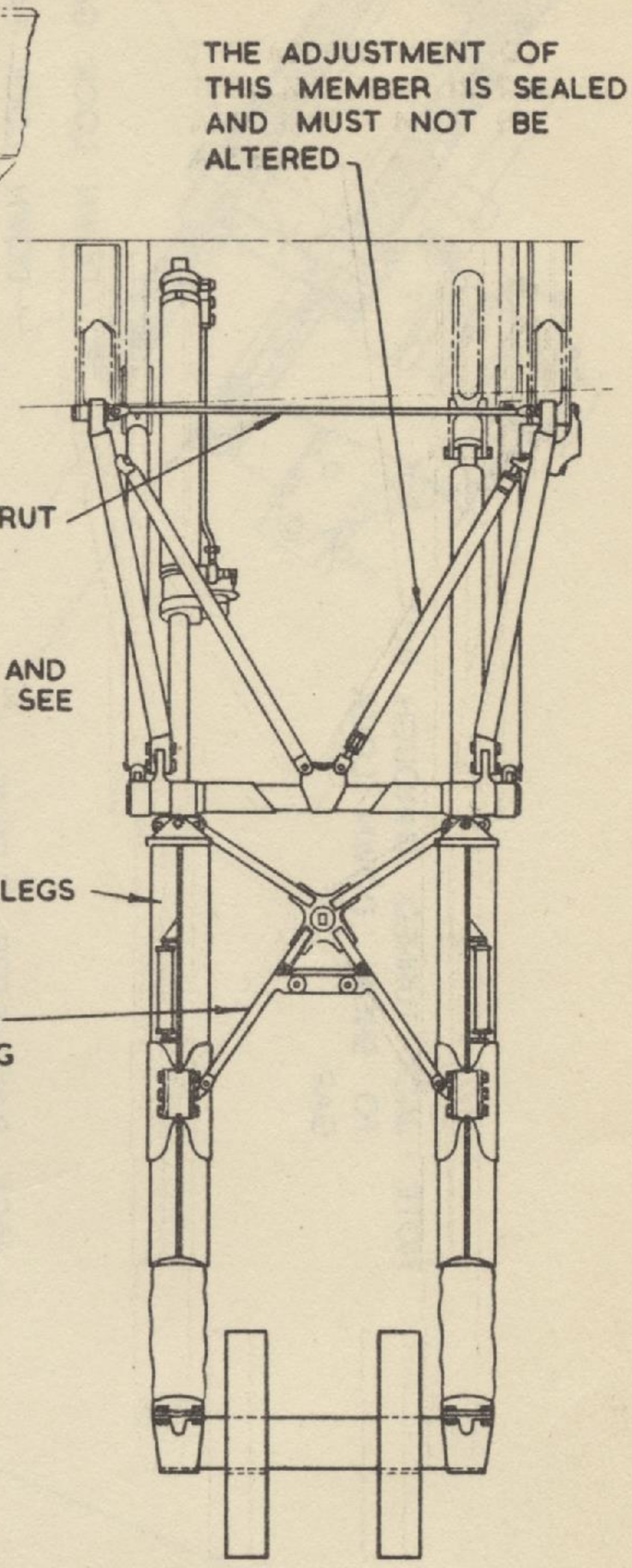

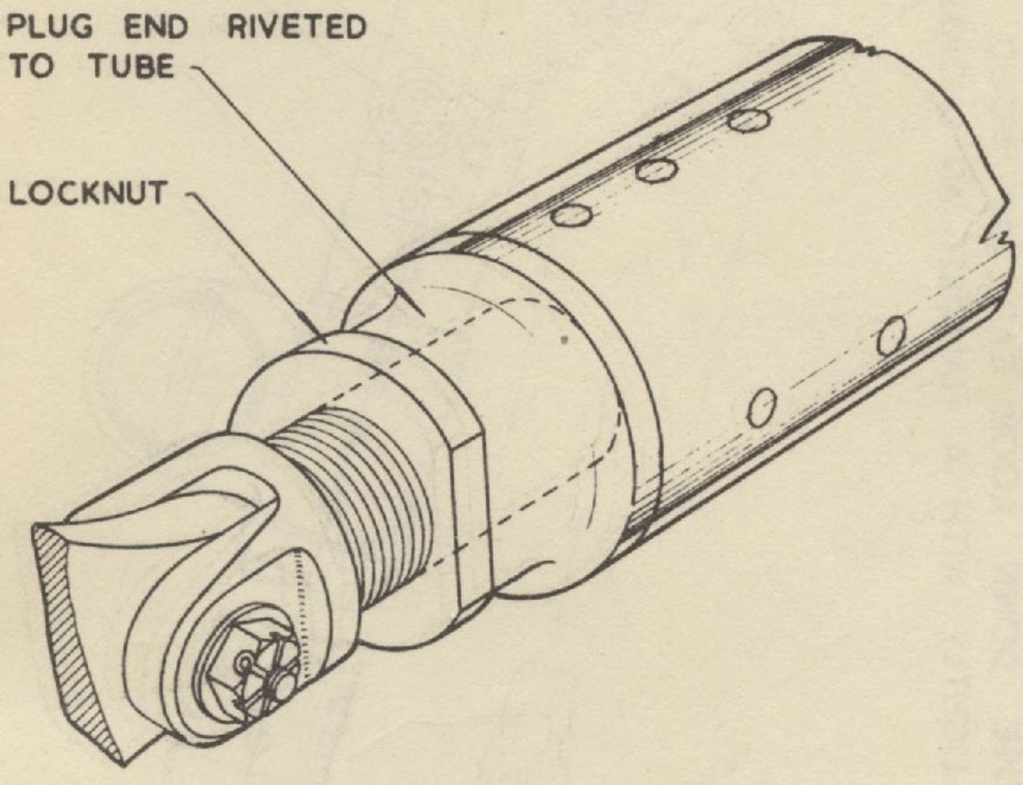

DETAIL SHOWING ADJUSTMENT OF JOINT 'B'

FOR UNDERCARRIAGE COMPLETE SEE SECT.7, CHAP.5

FOR ENGINE MOUNTING SEE SECT.5

FOR UNDERCARRIAGE TOP STRUCTURE AND ENGINE MOUNTING PICK UP BRACKETS SEE SECT.5

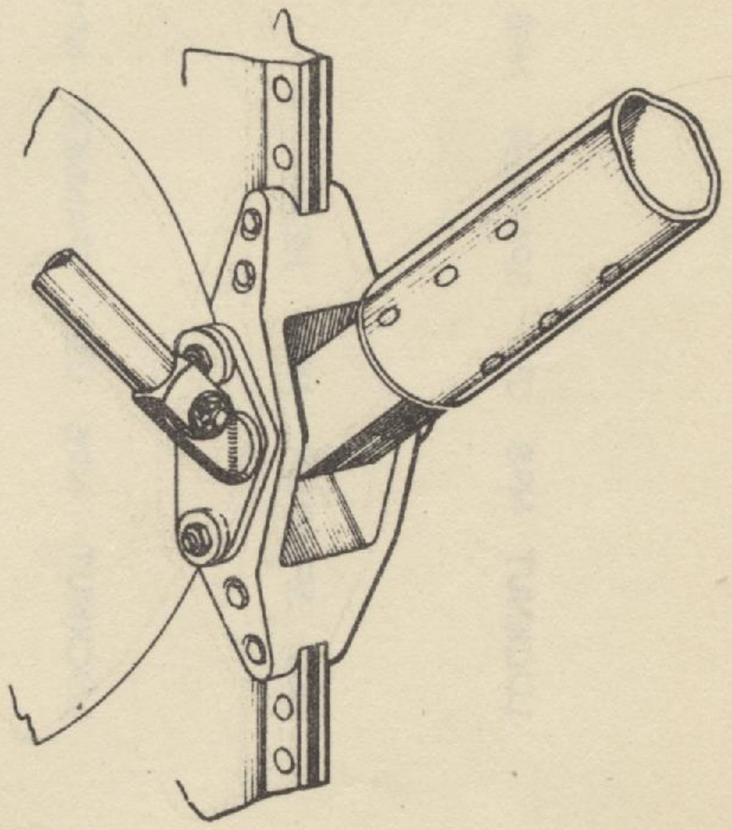

DETAIL OF JOINT 'A'

FIG. 16 ASSEMBLY OF ALIGHTING GEAR

G1371 M24243 7/49 550 C.B. & S.Ltd. Gp.55.

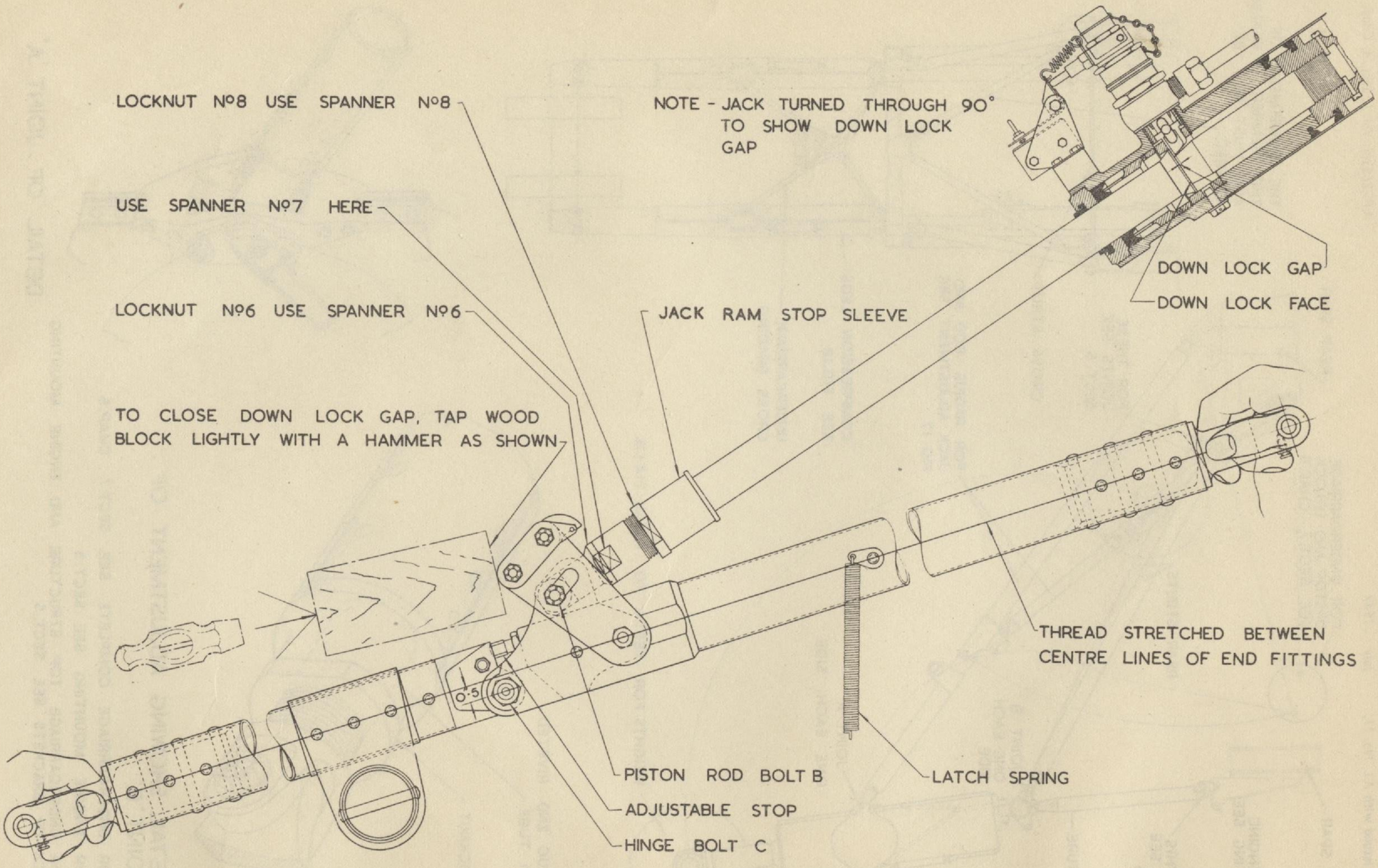

FIG. 17 UNDERCARRIAGE ADJUSTMENTS

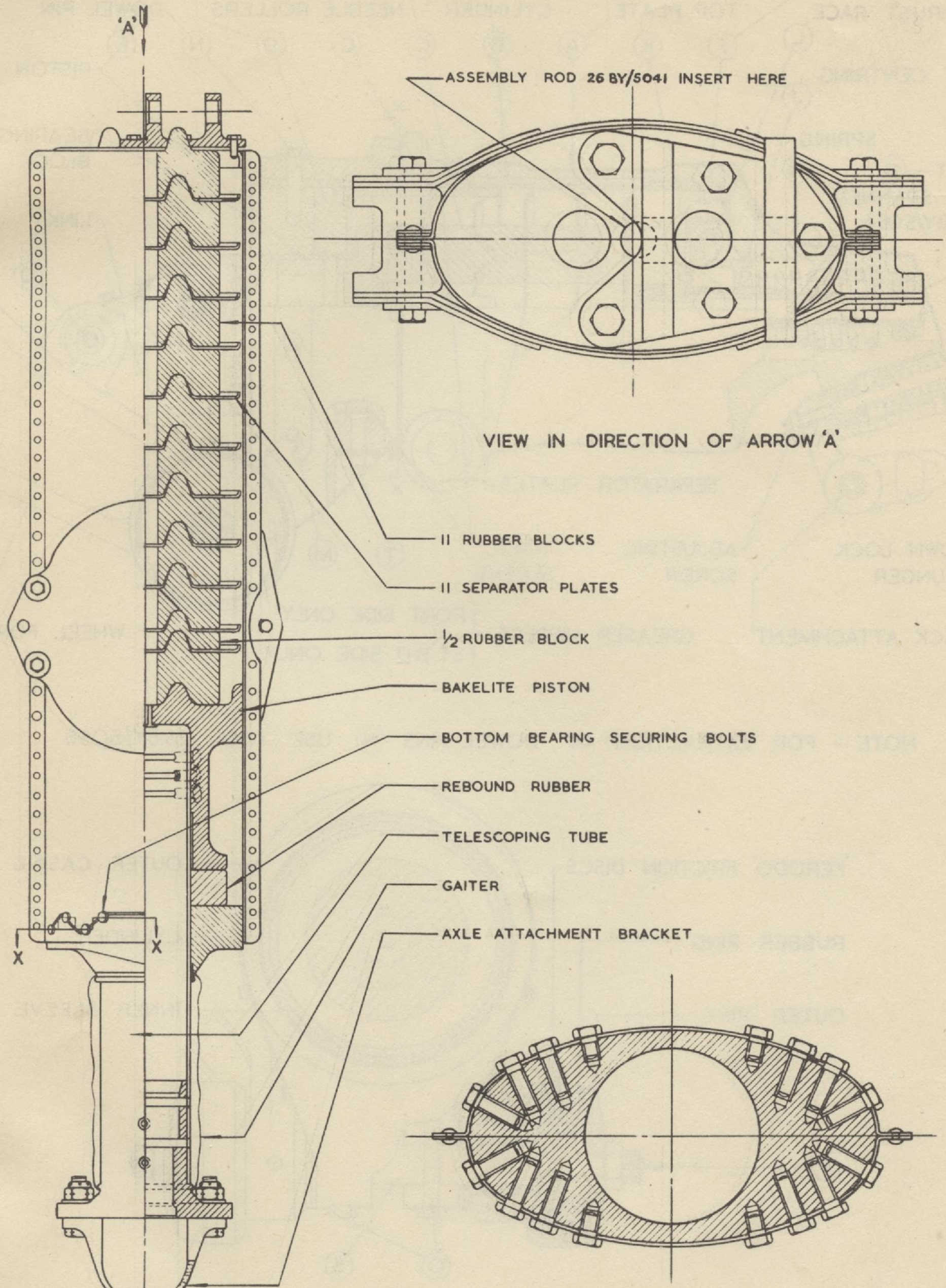

FIG. 18 SHOCK-ABSORBER STRUT

G1371 M24243 7/49 550 C.B.& S.LTD. GP.55.

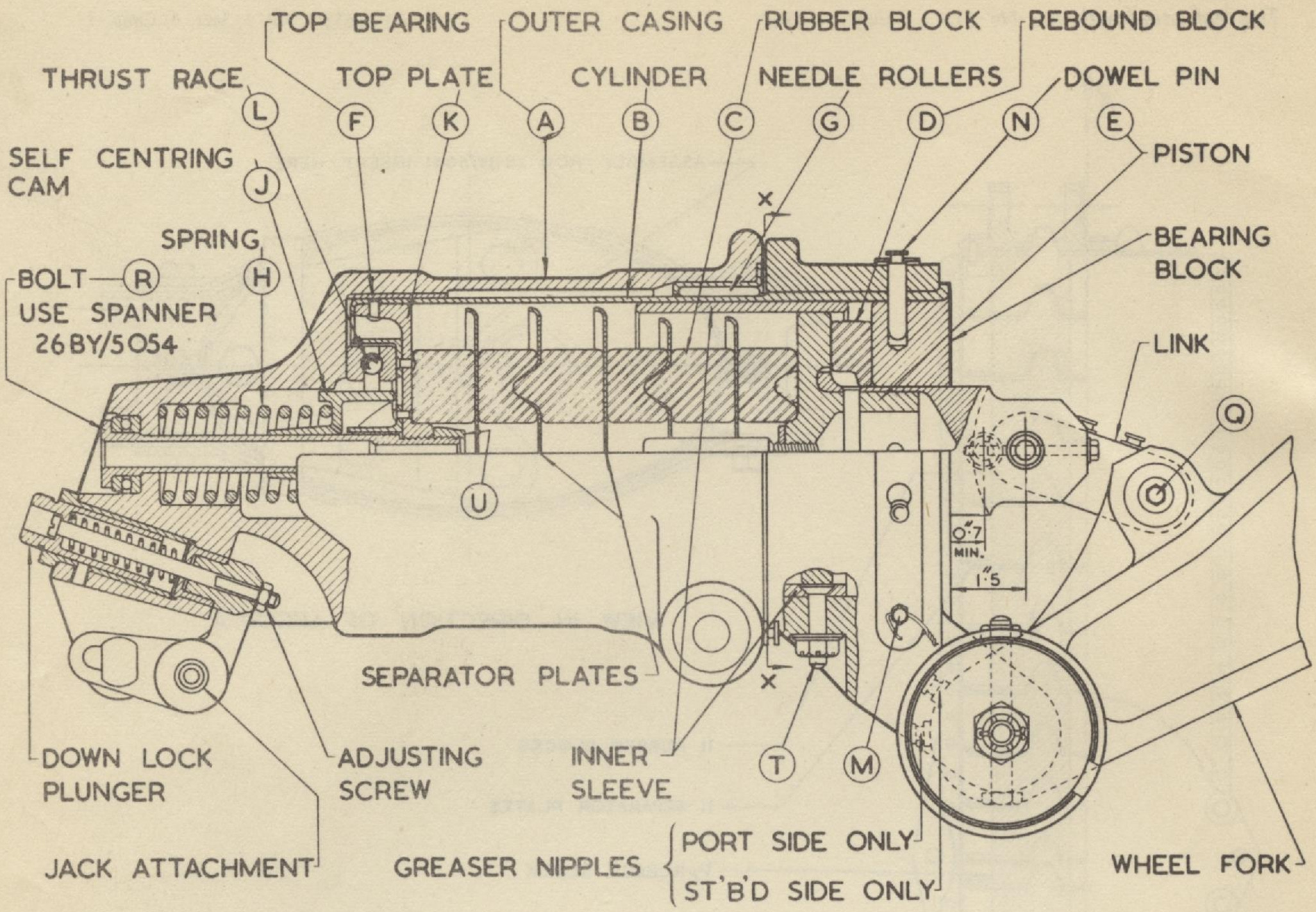

NOTE :- FOR EXTRACTION OF DOWEL PINS (N) USE TOOL 26 BY/5058

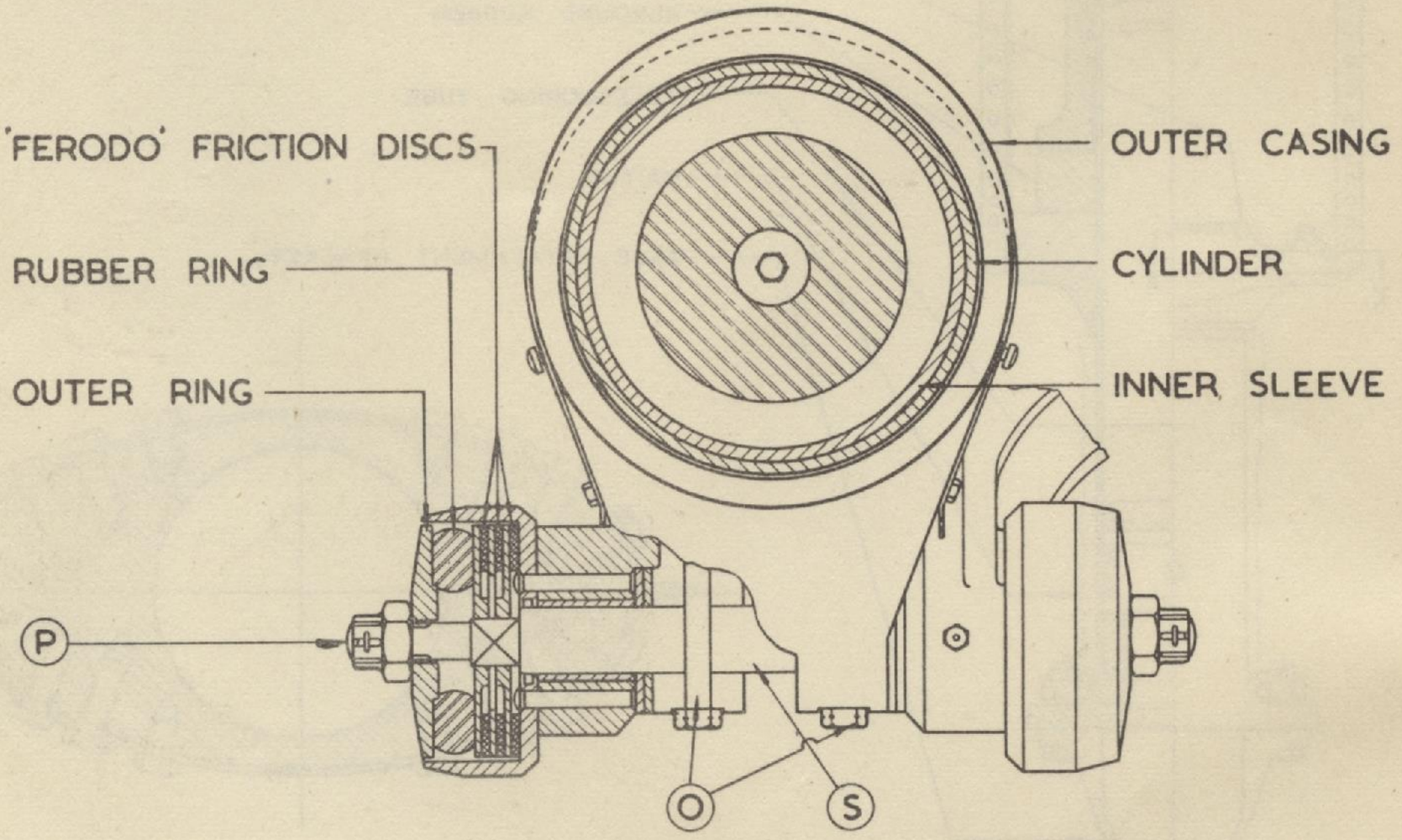

DETAIL OF FRICTION DAMPER SECTION X-X

FIG. 19 TAIL WHEEL STRUT ASSEMBLY

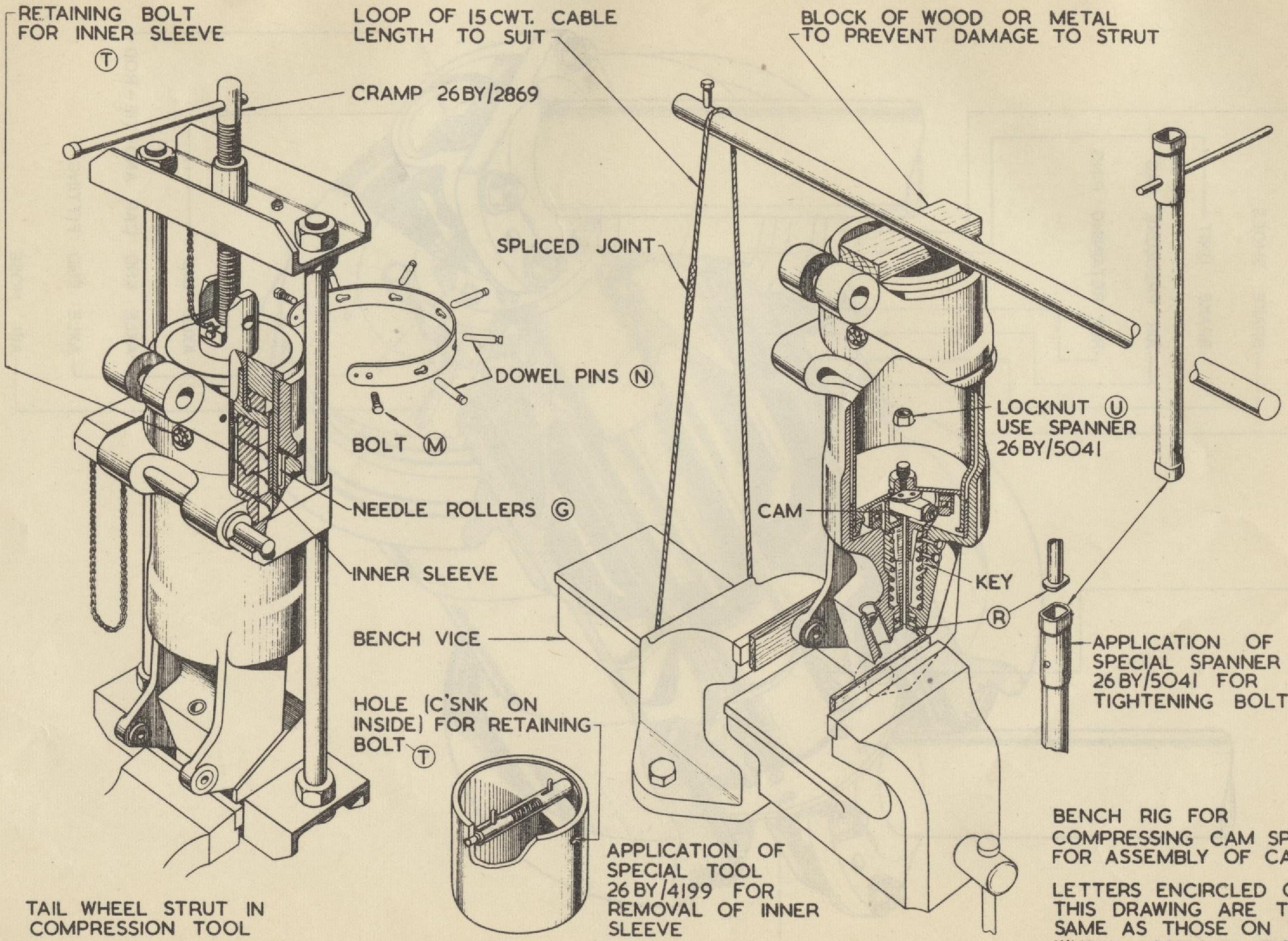

FIG. 20 TAIL WHEEL STRUT—DISMANTLING

G1371 M24243 7/49 550 C.B.& S.LTD. GP55.

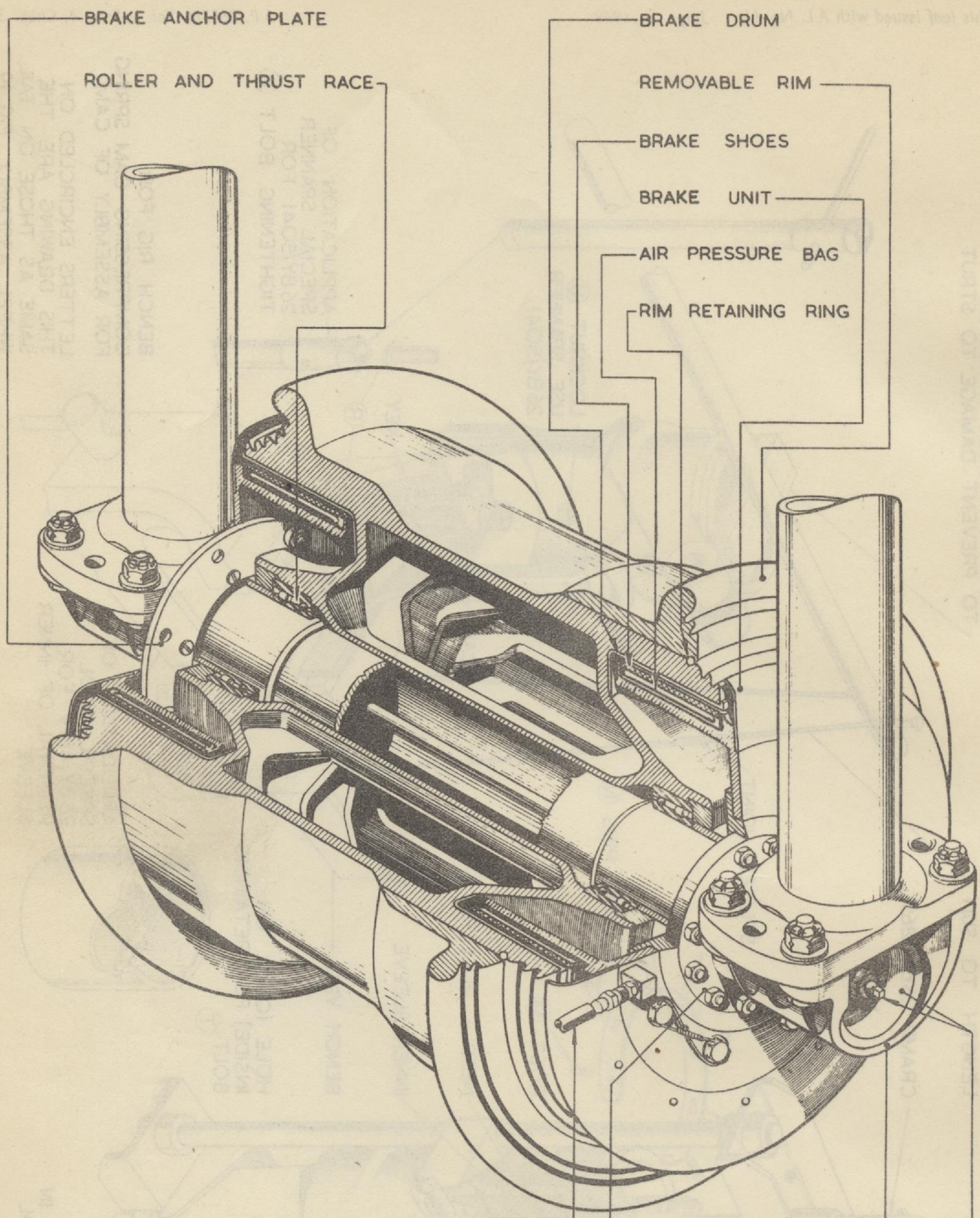

FIG. 21 MAIN WHEEL HUB ASSEMBLY

7876 68203 1/53 450 C.B.& S.LTD. GP.55

PROPELLER CONTROLS

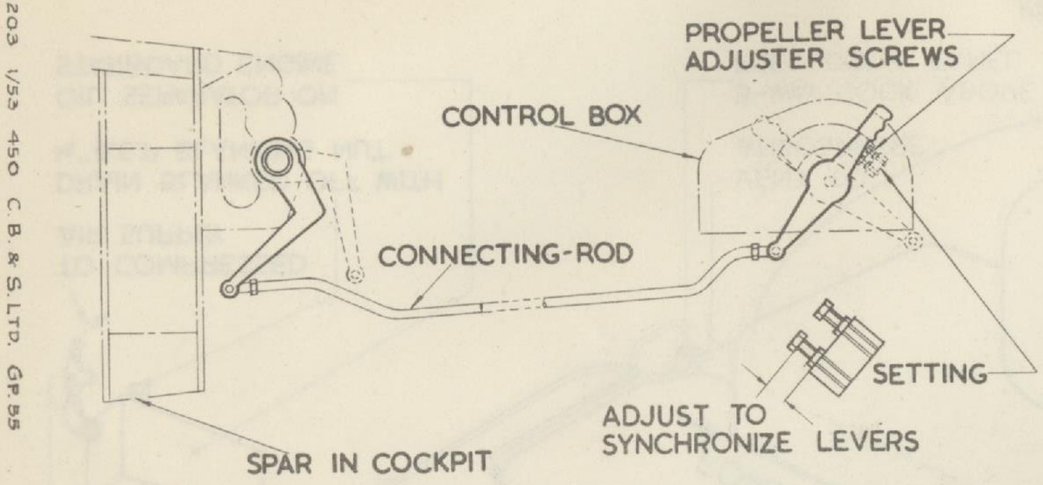

CONTROL IN COCKPIT

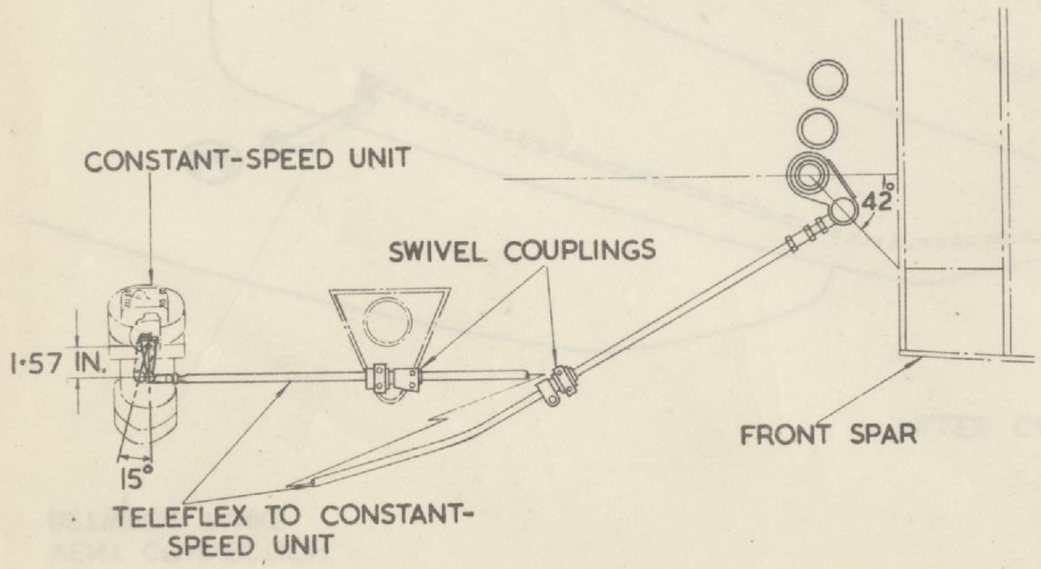

CONTROL AT ENGINE BAY

THROTTLE CONTROLS

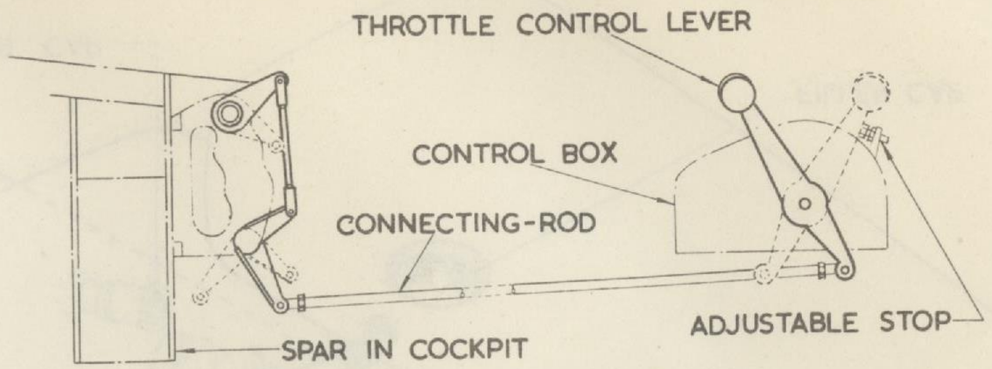

CONTROL IN COCKPIT

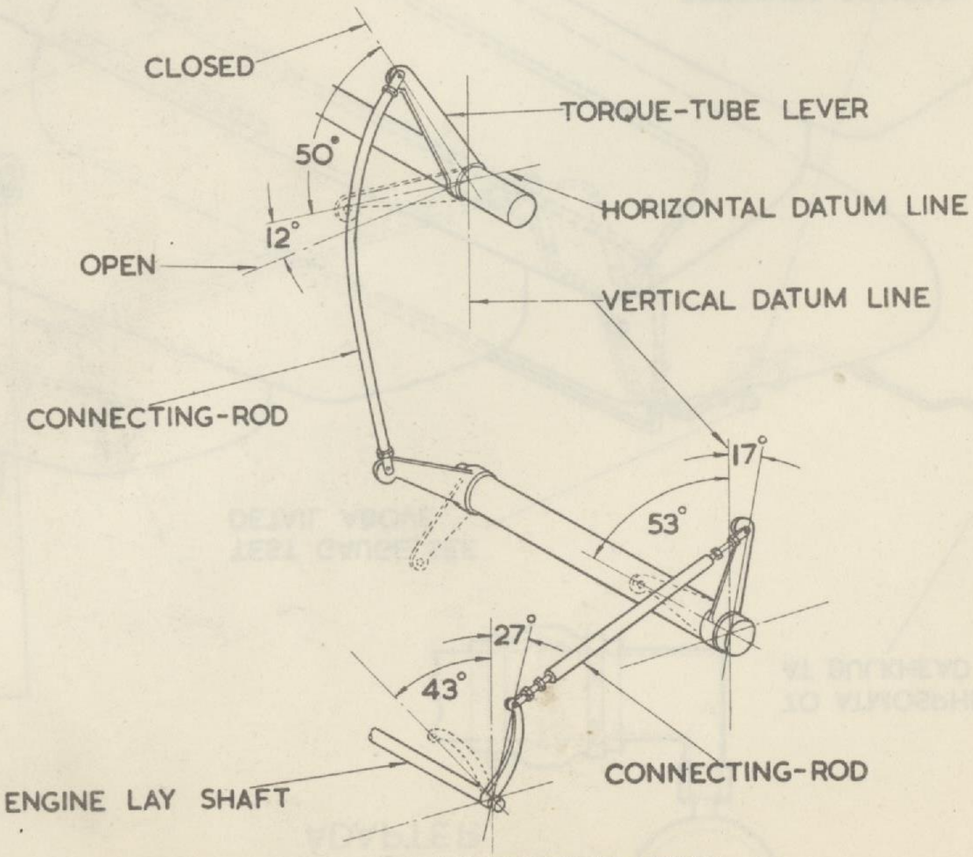

CONTROL AT ENGINE BAY

FIG. 22 ENGINE CONTROL RIGGING

This leaf issued with A.L. No. 26, November, 1952

A.P. 2653N, Vol. I, Sect. 4, Chap. 3

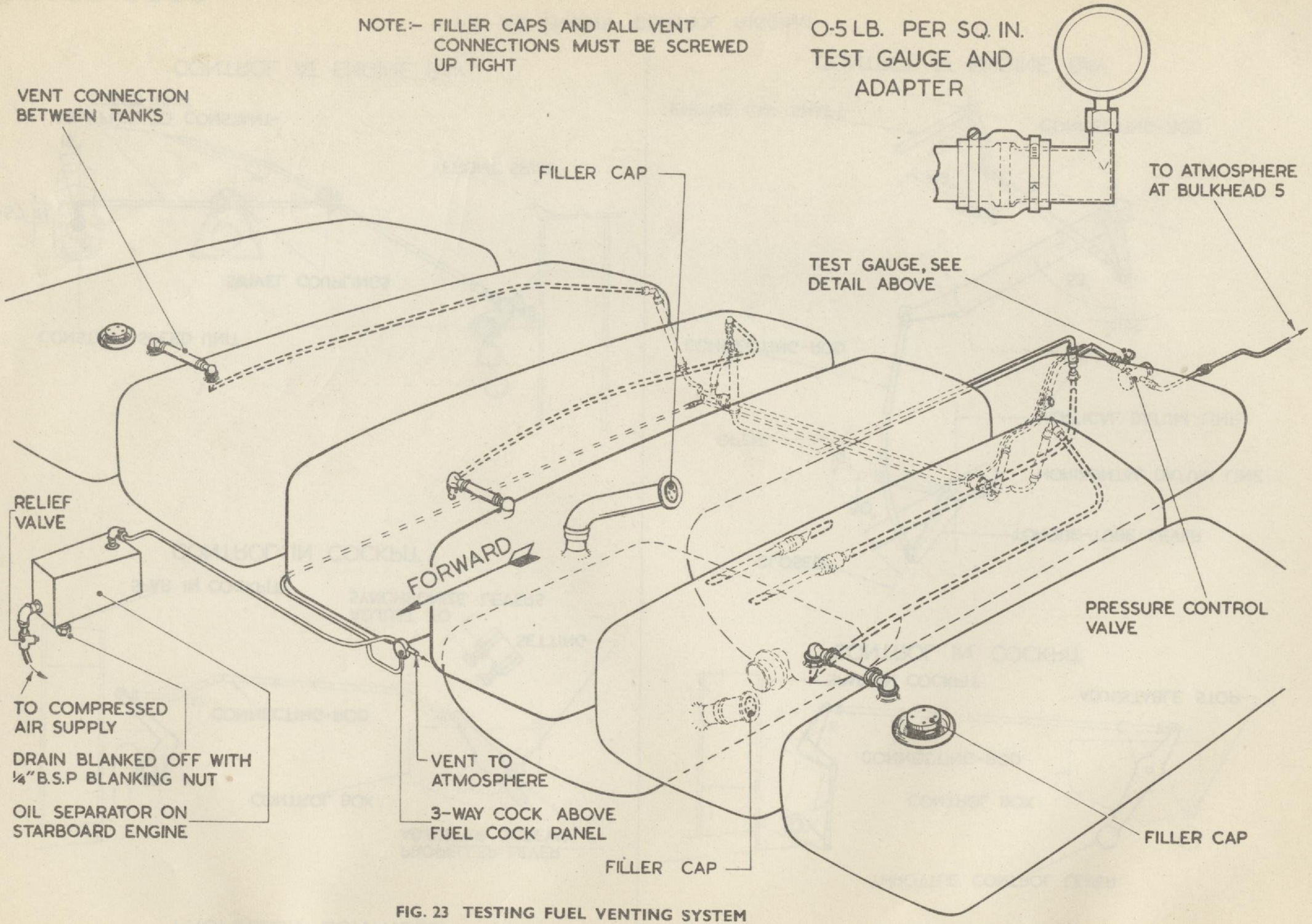

FIG. 23 TESTING FUEL VENTING SYSTEM

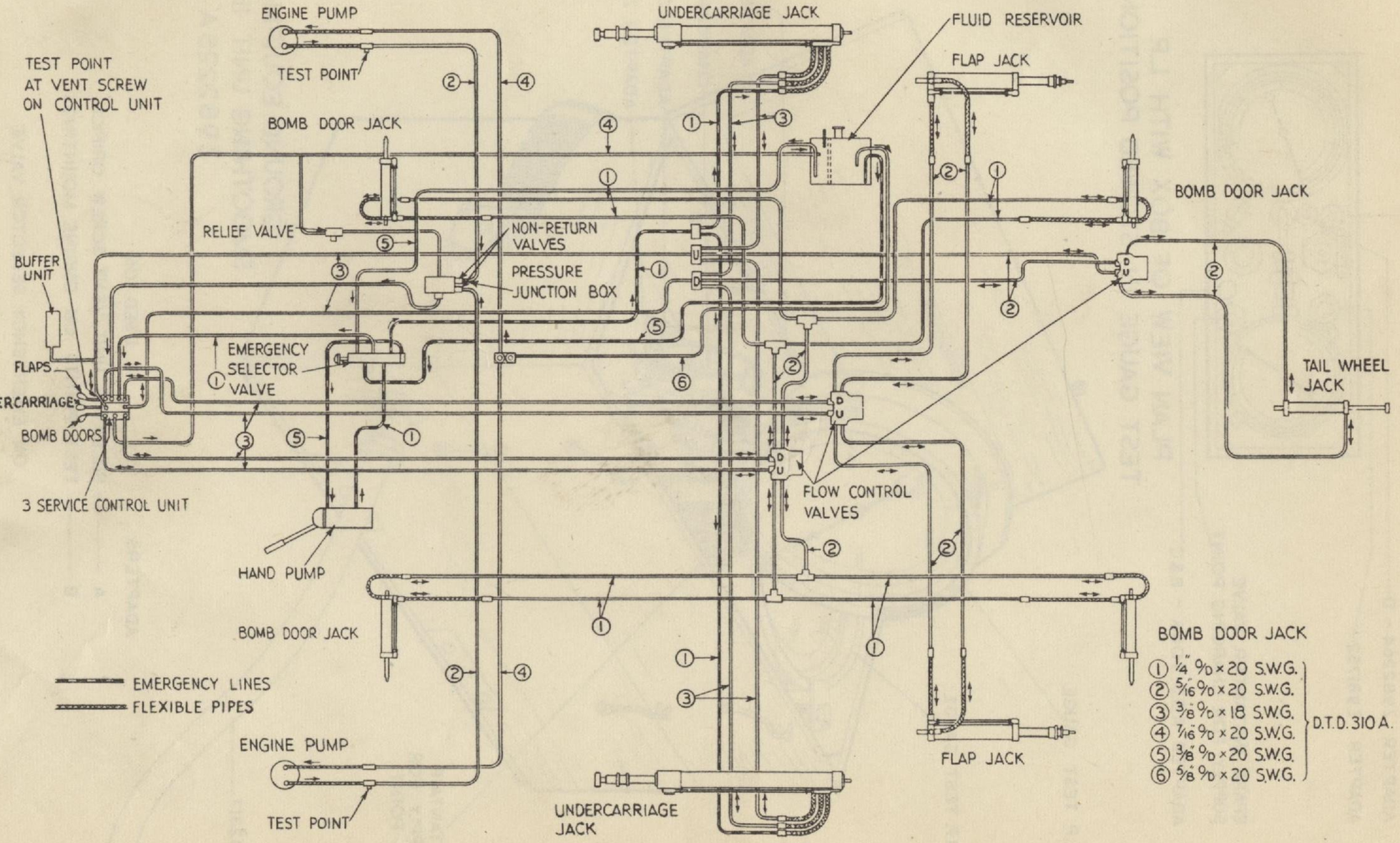

FIG. 24 HYDRAULIC SYSTEM DIAGRAM

G1371 M24243 7/49 550 C.B.& S.Ltd. Gp55.

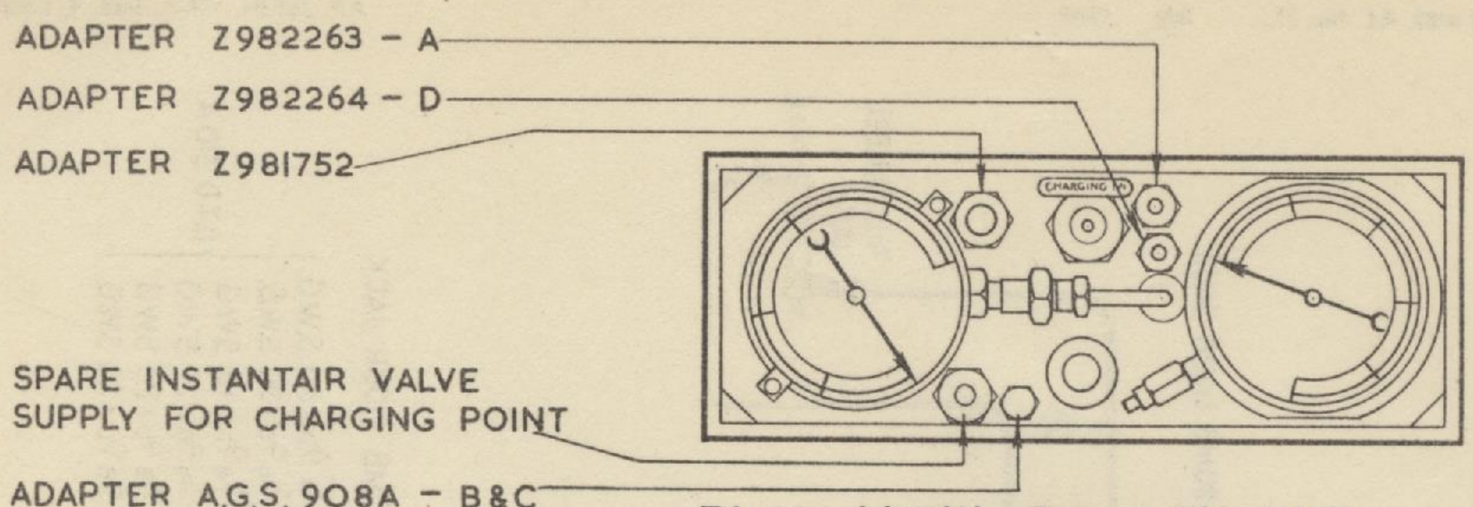

PLAN VIEW OF BOX WITH L.P. TEST GAUGE IN STOWED POSITION

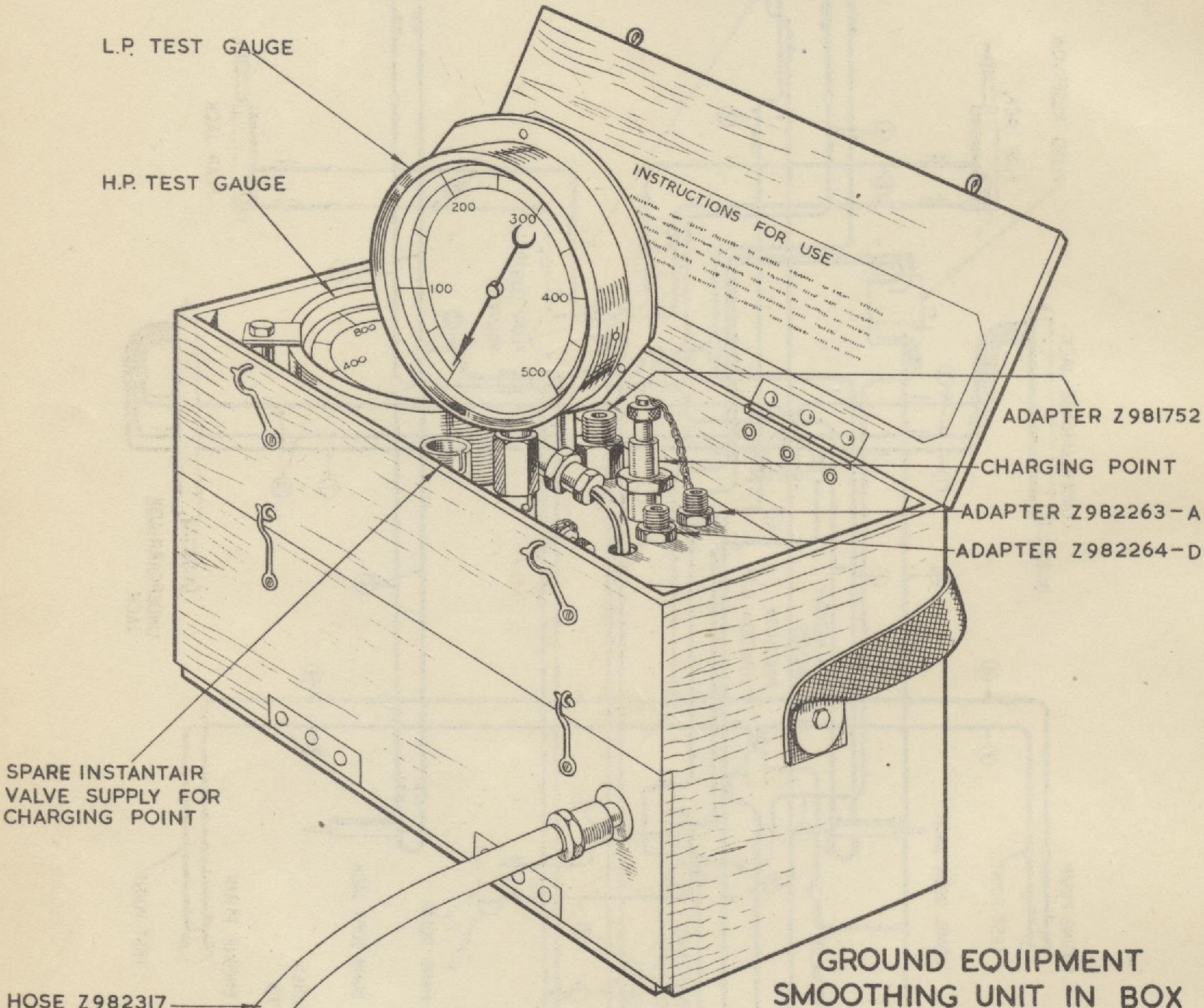

GROUND EQUIPMENT SMOOTHING UNIT IN BOX Z982225A

ADAPTERS USED ON

A ——— SELECTOR UNIT VENT SCREW ORIFICE

B ——— TEST POINTS ON ENGINE MOUNTINGS

ON EMERGENCY SELECTOR VALVE

C ——— PRESSURE LINE TO SELECTOR UNIT

D ——— EMERGENCY LINE TO JACKS

FIG. 25 HYDRAULIC TEST SMOOTHING UNIT

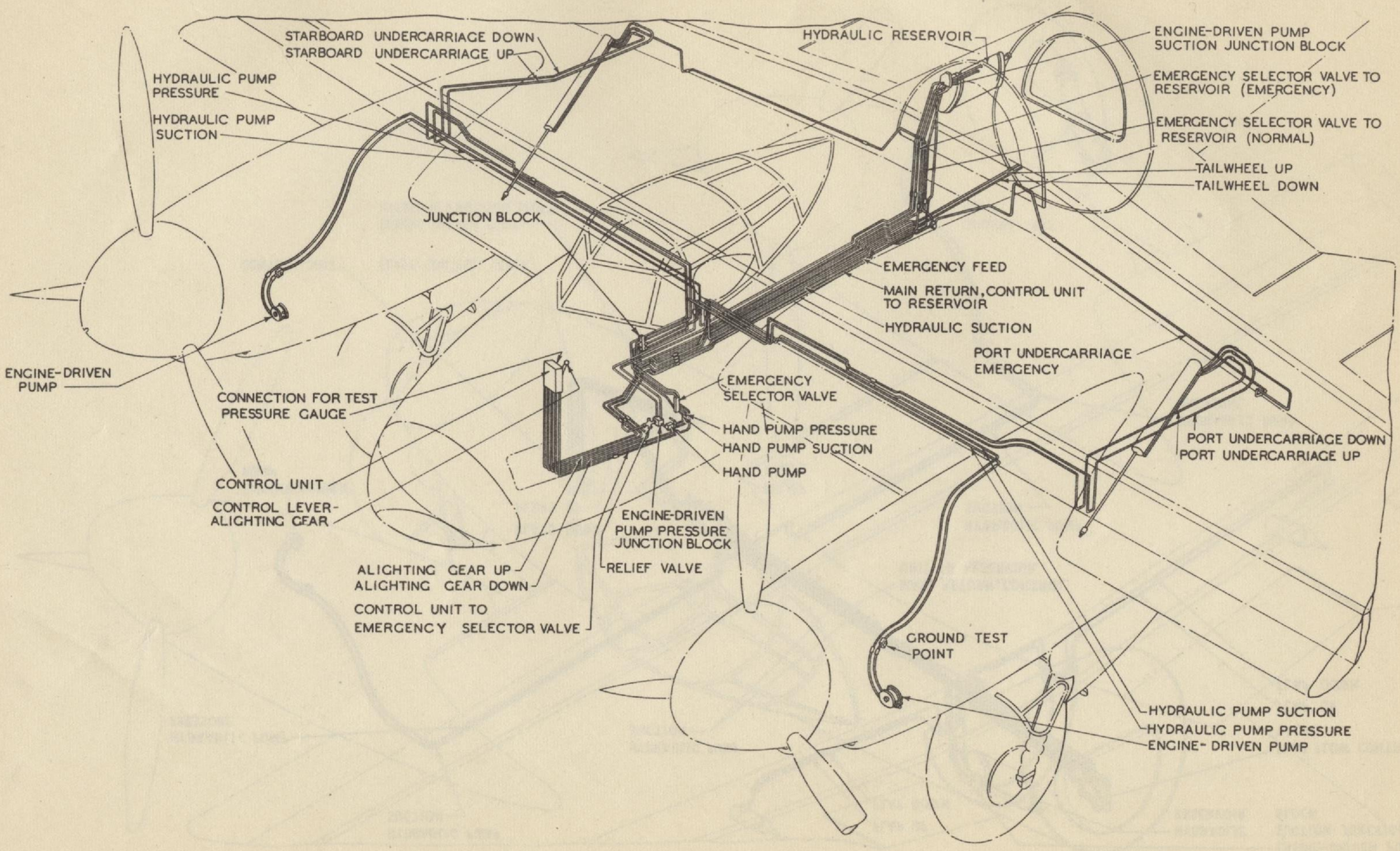

FIG. 26 ALIGHTING GEAR HYDRAULICS

G1371 M24243 7/49 550 C.B.& S.LTD. GP55.

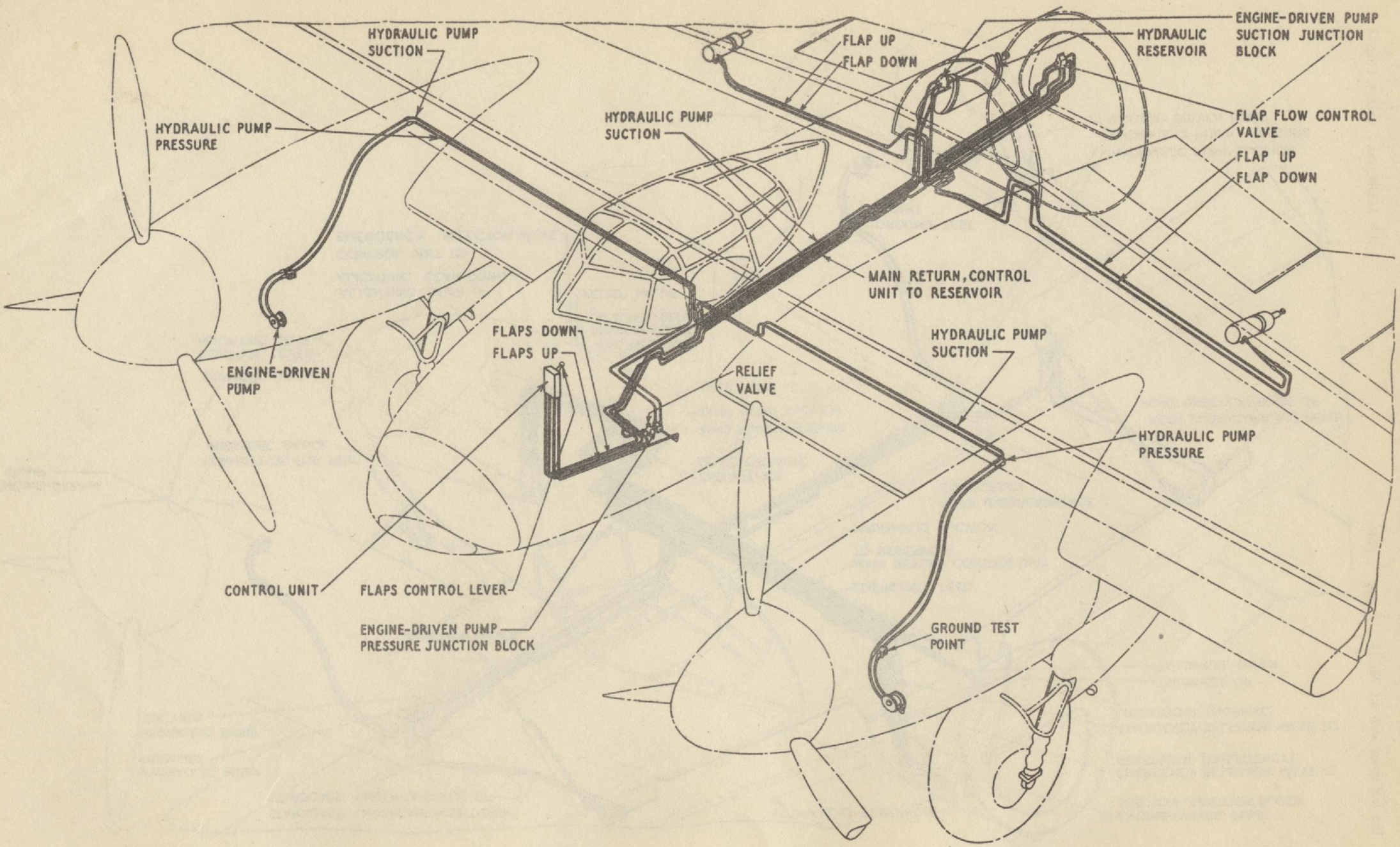

FIG. 27 FLAPS GEAR HYDRAULICS

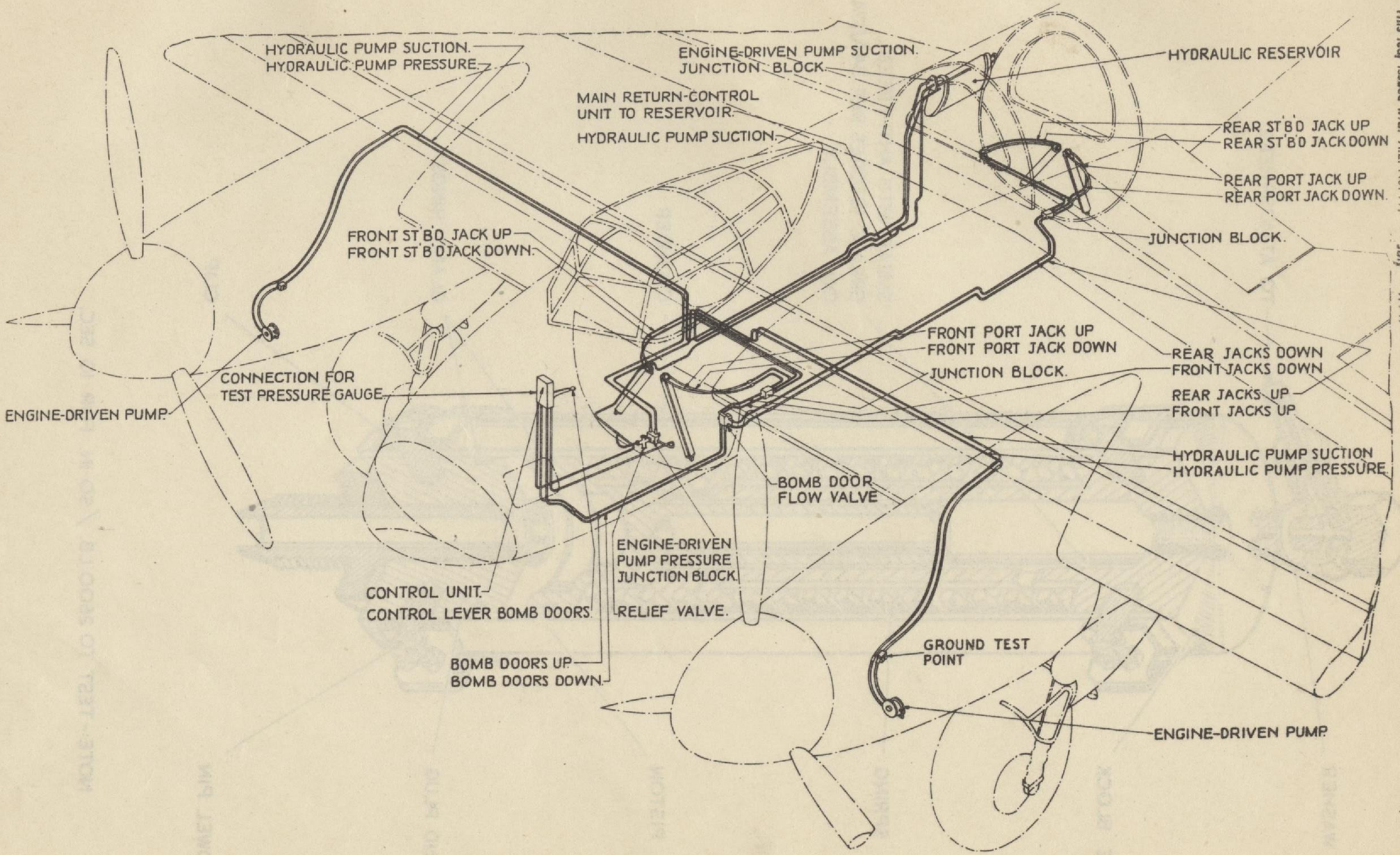

FIG. 28 BOMB DOORS—HYDRAULICS

G1371 M24243 7/49 550 C.B. & S.Ltd. Gp.55.

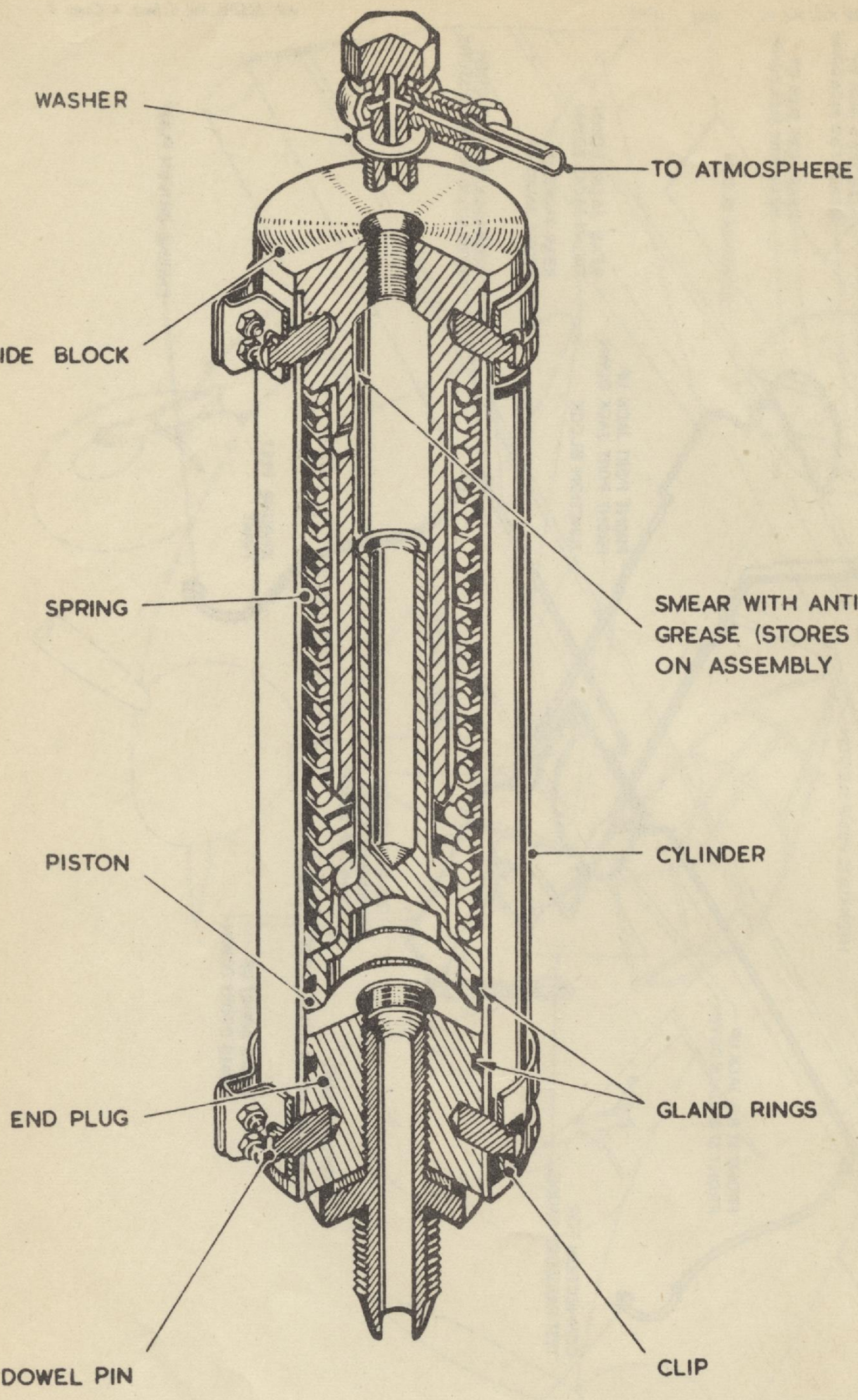

NOTE:- TEST TO 2600 LB. / SQ. IN. FOR 10 SEC.

FIG. 29 ASSEMBLY OF BUFFER UNIT

7876 68203 1/53 450 C.B. & S. LTD. GP.55

This leaf issued with A.L. No. 26, November, 1952 A.P. 2653N, Vol. 1, Sect. 4, Chap. 3

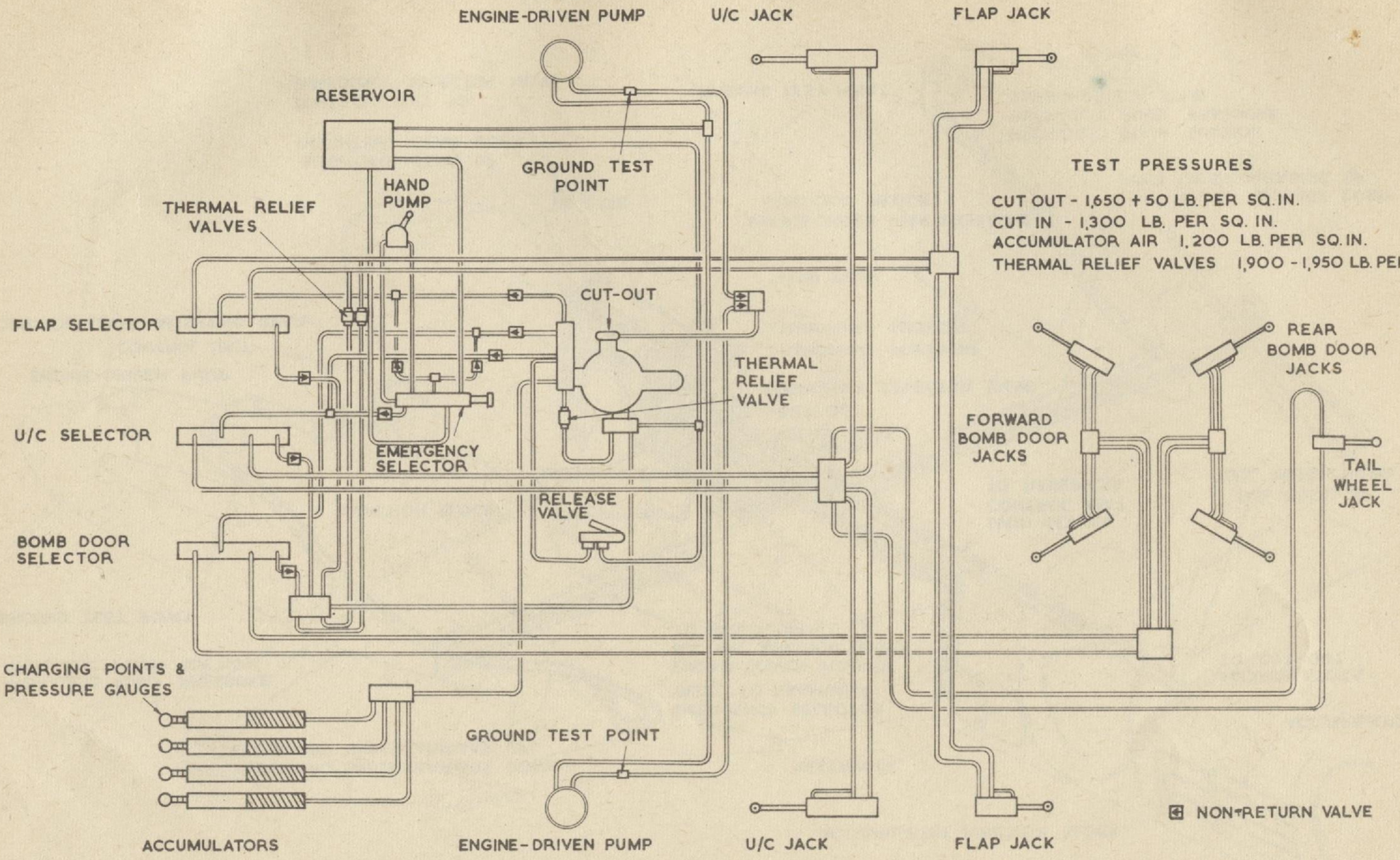

FIG. 29A HYDRAULIC SYSTEM DIAGRAM (MOD. 1443)

RESTRICTED

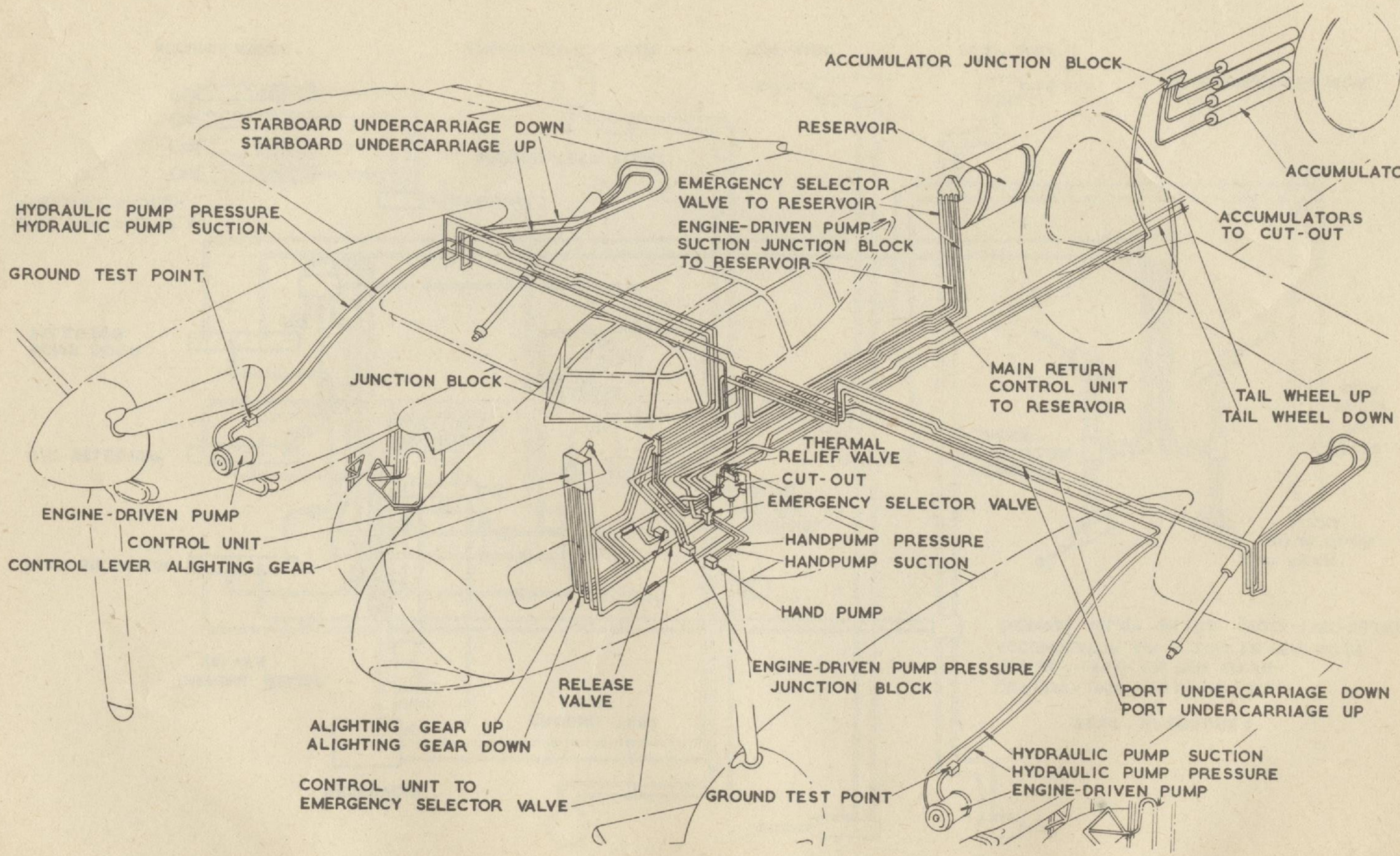

FIG. 29B ALIGHTING GEAR HYDRAULICS (MOD. 1443)

7876 68203 1/53 450 C.B. & S. LTD. GP.55

This leaf issued with A.L. No. 26, November, 1952 A.P. 2653N, Vol. 1, Sect. 4, Chap. 3

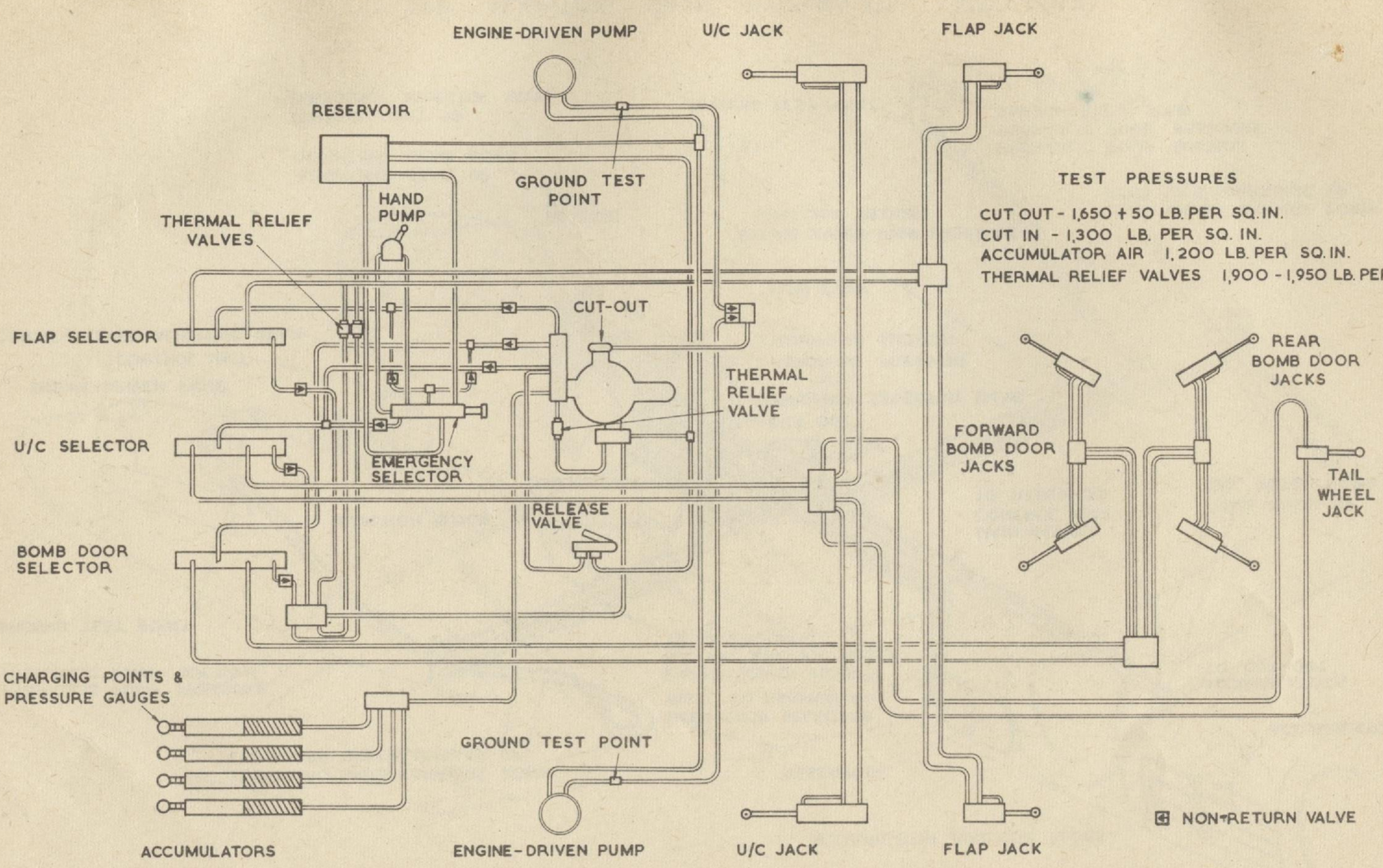

FIG. 29A HYDRAULIC SYSTEM DIAGRAM (MOD. 1443)

RESTRICTED

7676 68203 1/53 450 C.B.&S. LTD. GP.55

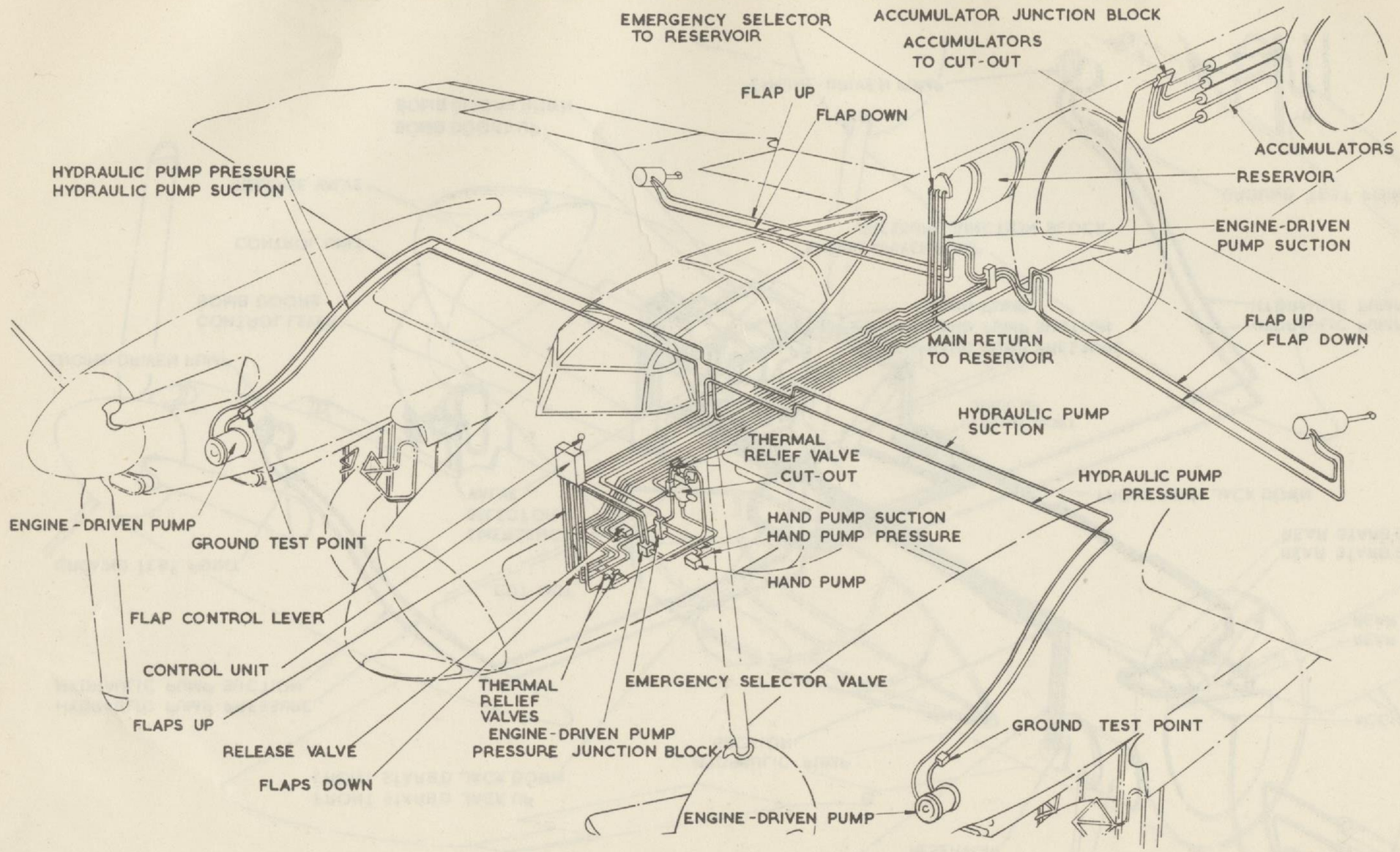

FIG. 29C FLAPS GEAR HYDRAULICS (MOD. 1443)

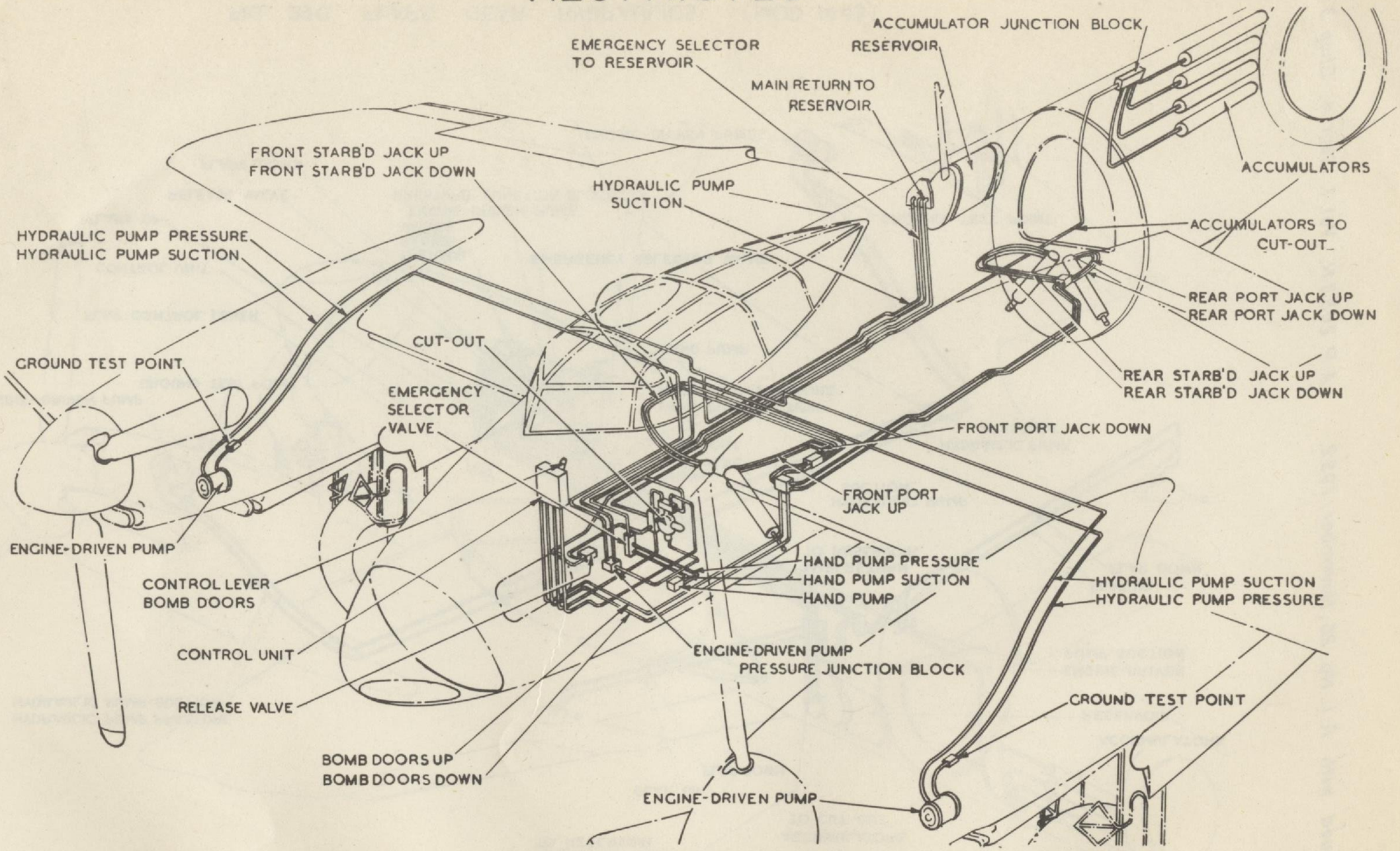

FIG. 29D BOMB DOORS HYDRAULICS (MOD. 1443)

B DOWELS
C LOCKNUT
E LATCH (SPRING-LOADED)
H SPRING HOUSING
M STRIKER PIN
N LEAF SPRING
P MICRO SWITCHES
S LATCH SLEEVE
T LOCATING BOLT

4 LATCH SLEEVE RETAINING NUT
9 OUTER CASING
10 GLAND NUT
11 STOP-NUT
12 RETURN SPRING & RETAINING PLATE

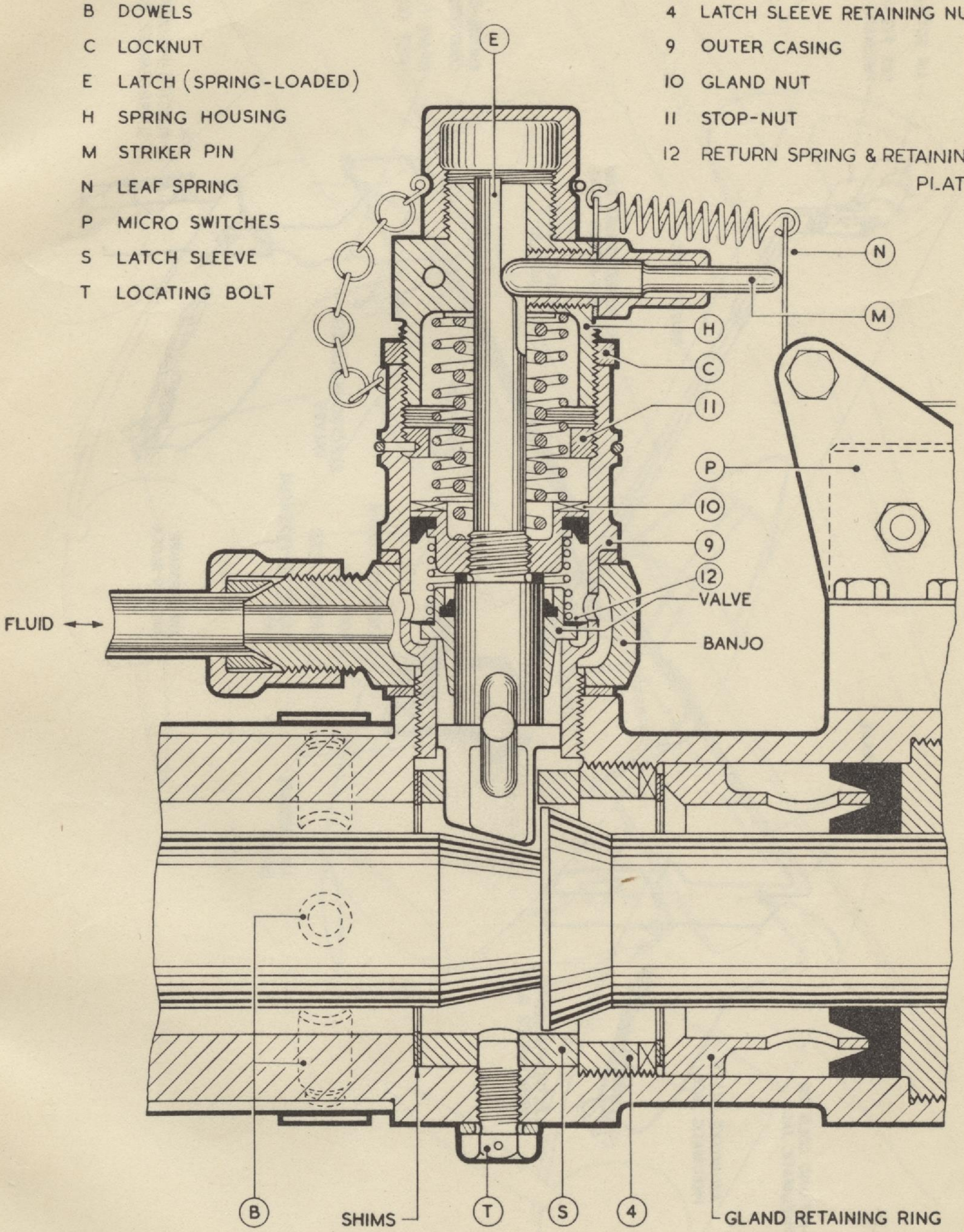

FIG. 30 LATCH MECHANISM

G1371 M24243 7/49 550 C.B.& S.LTD. GP55.

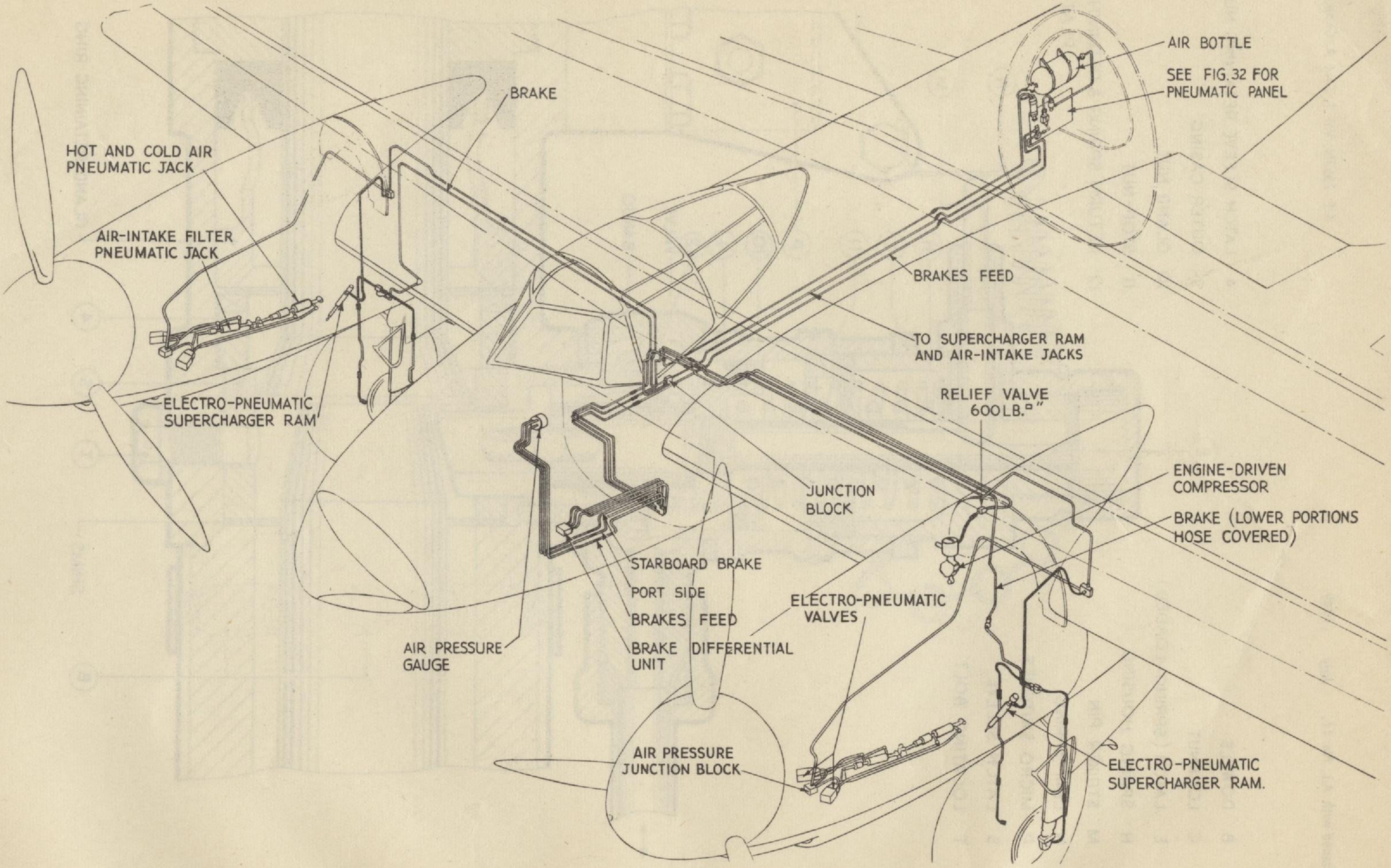

FIG. 31 PNEUMATIC SYSTEM

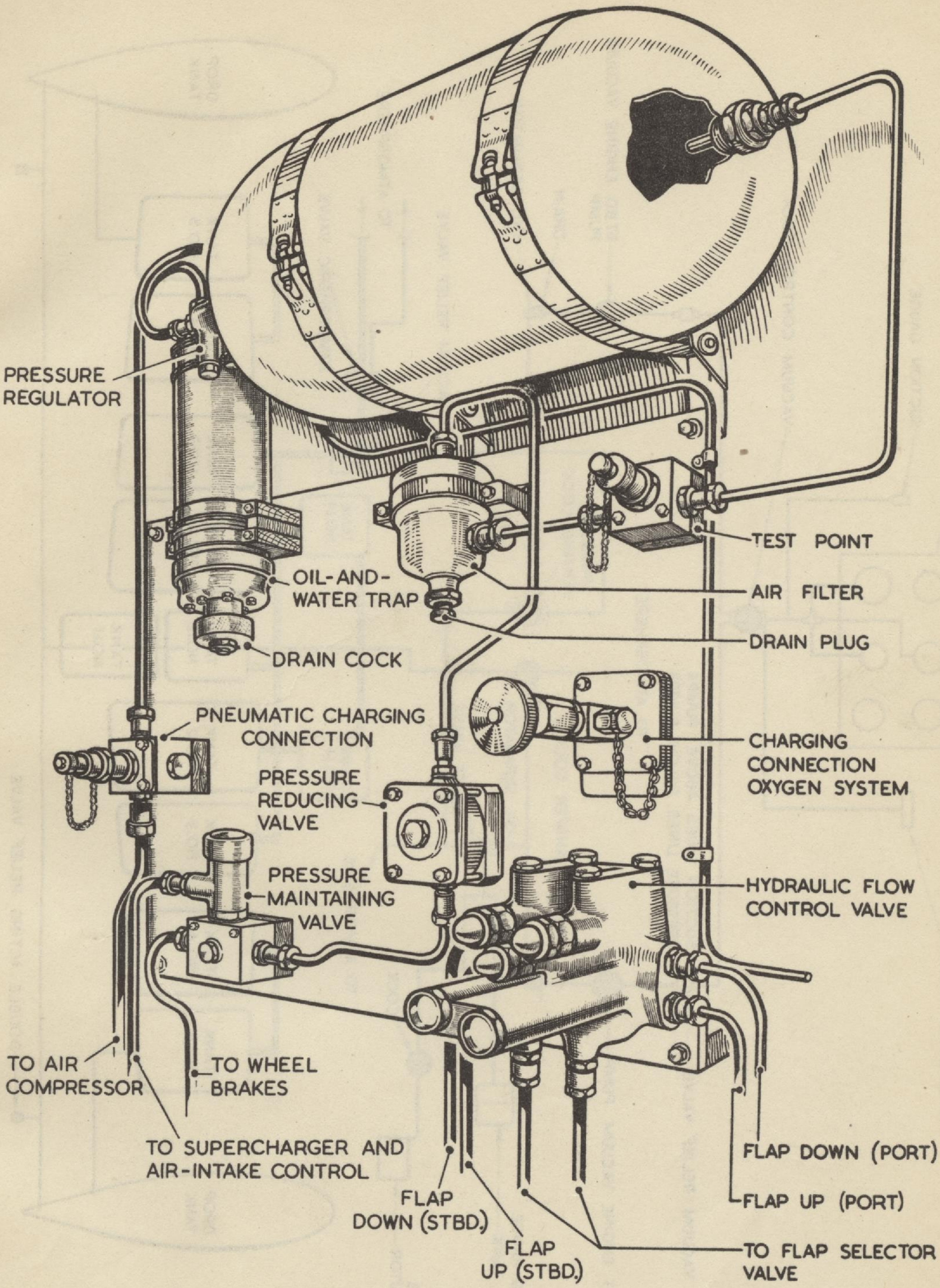

FIG. 32 PNEUMATIC—HYDRAULIC PANEL

G1371 M24243 7/49 550 C.B.& S.LTD. GP.55.

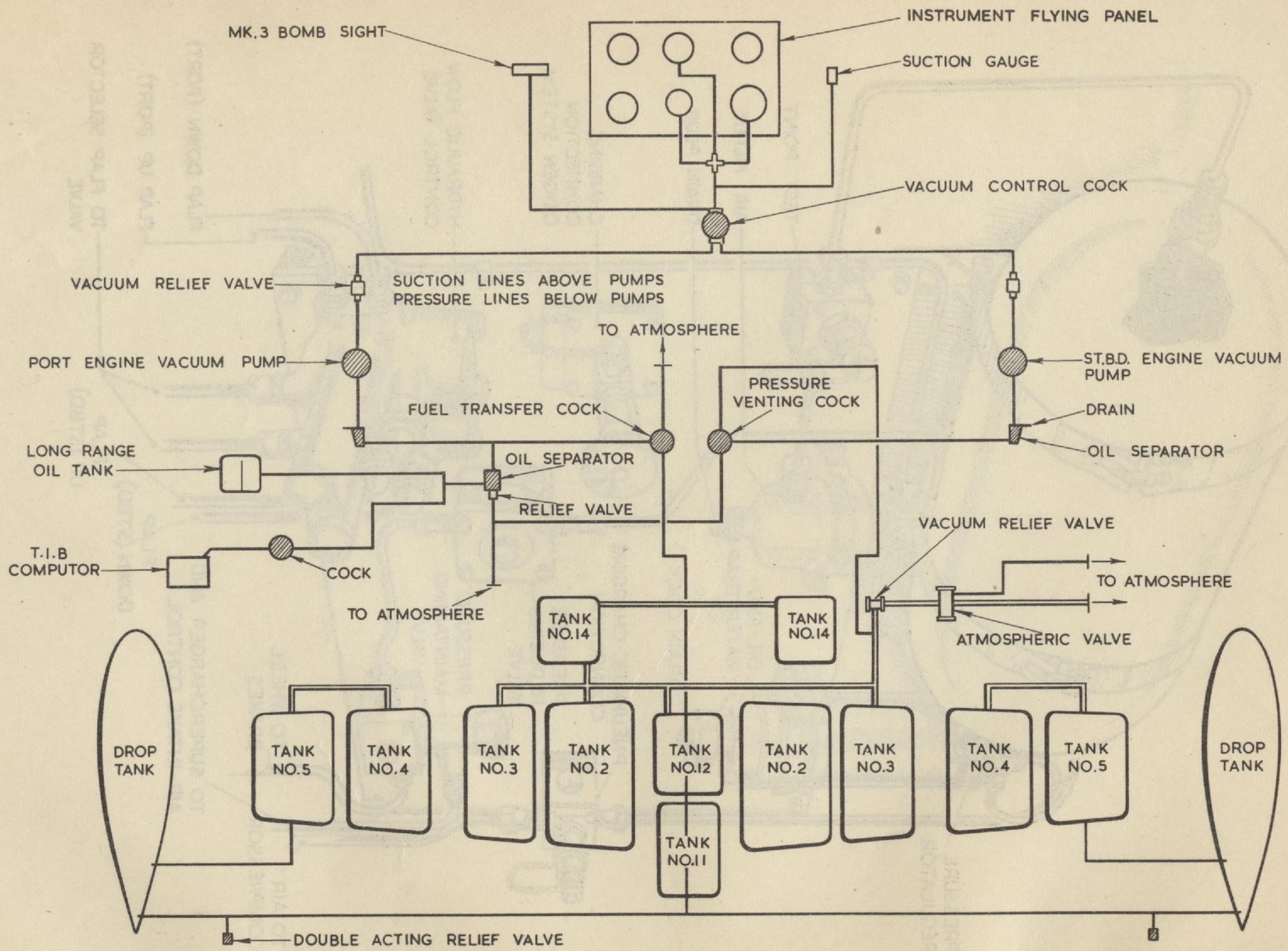

FIG. 33 VACUUM SYSTEM DIAGRAM

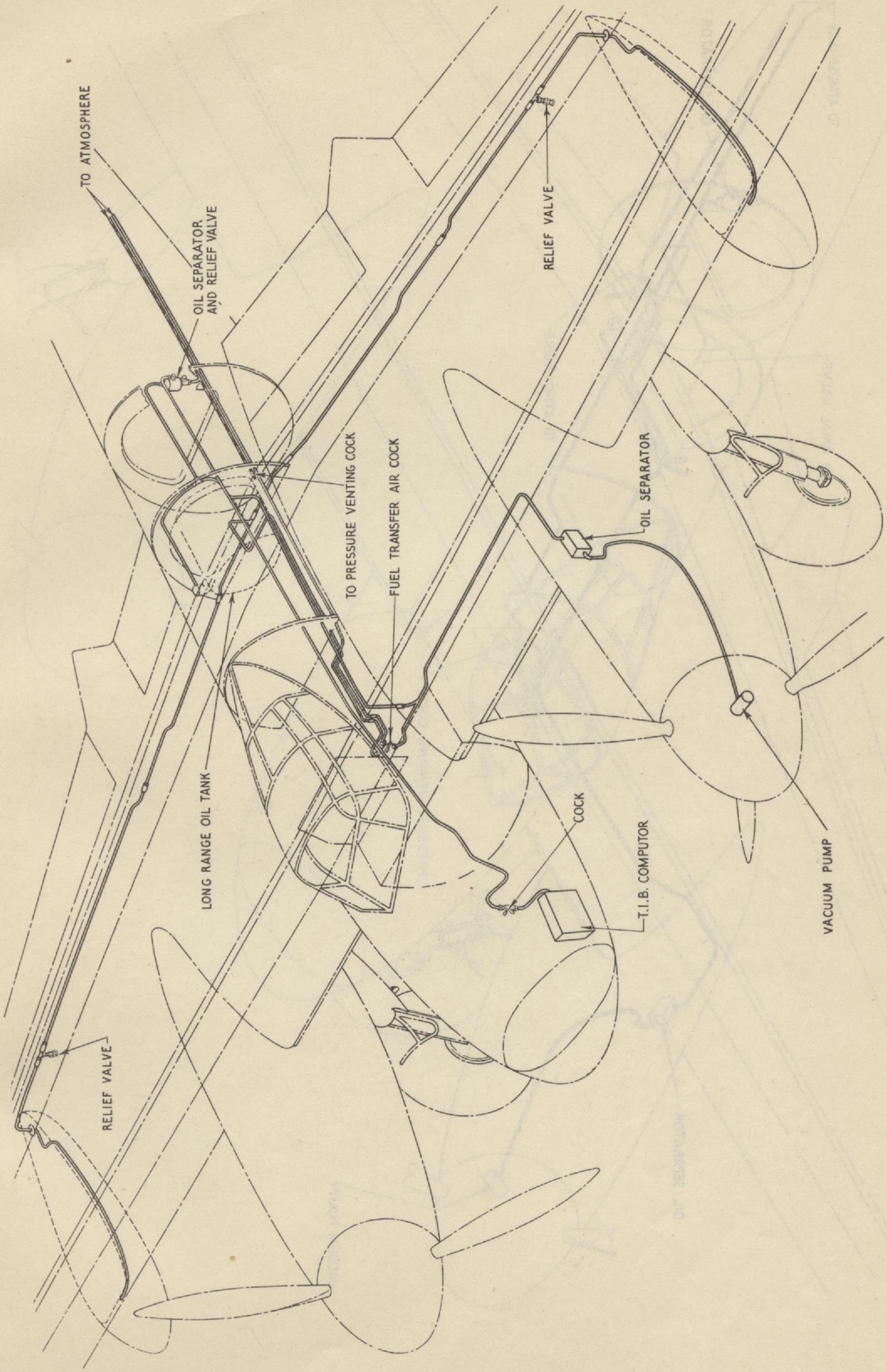

FIG. 34 SYSTEM ON PRESSURE SIDE OF PORT VACUUM PUMP

G1371 M24243 7/49 550 C.B.& S.Ltd. Gp.55.

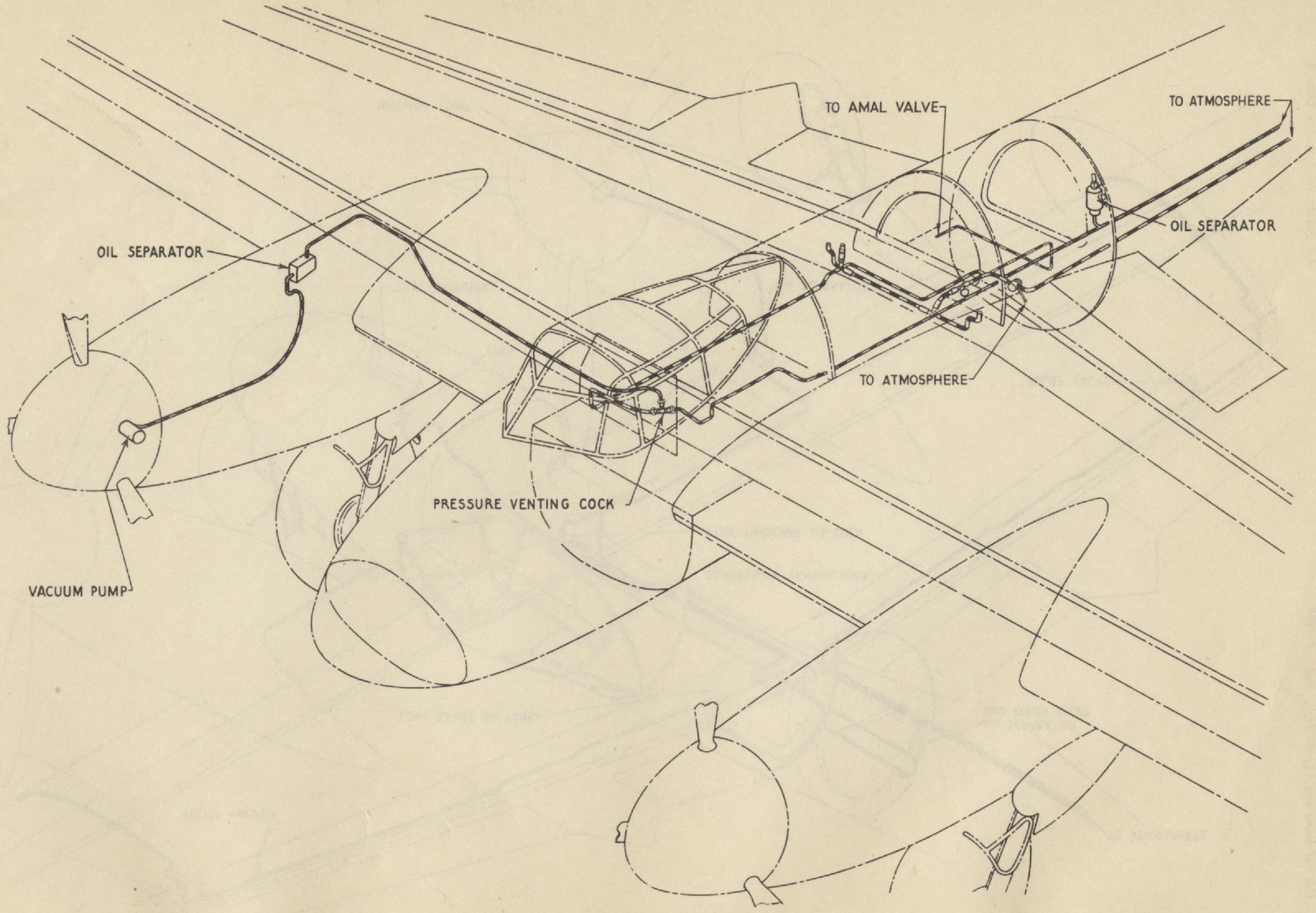

FIG. 35 SYSTEM ON PRESSURE SIDE OF STARBOARD VACUUM PUMP

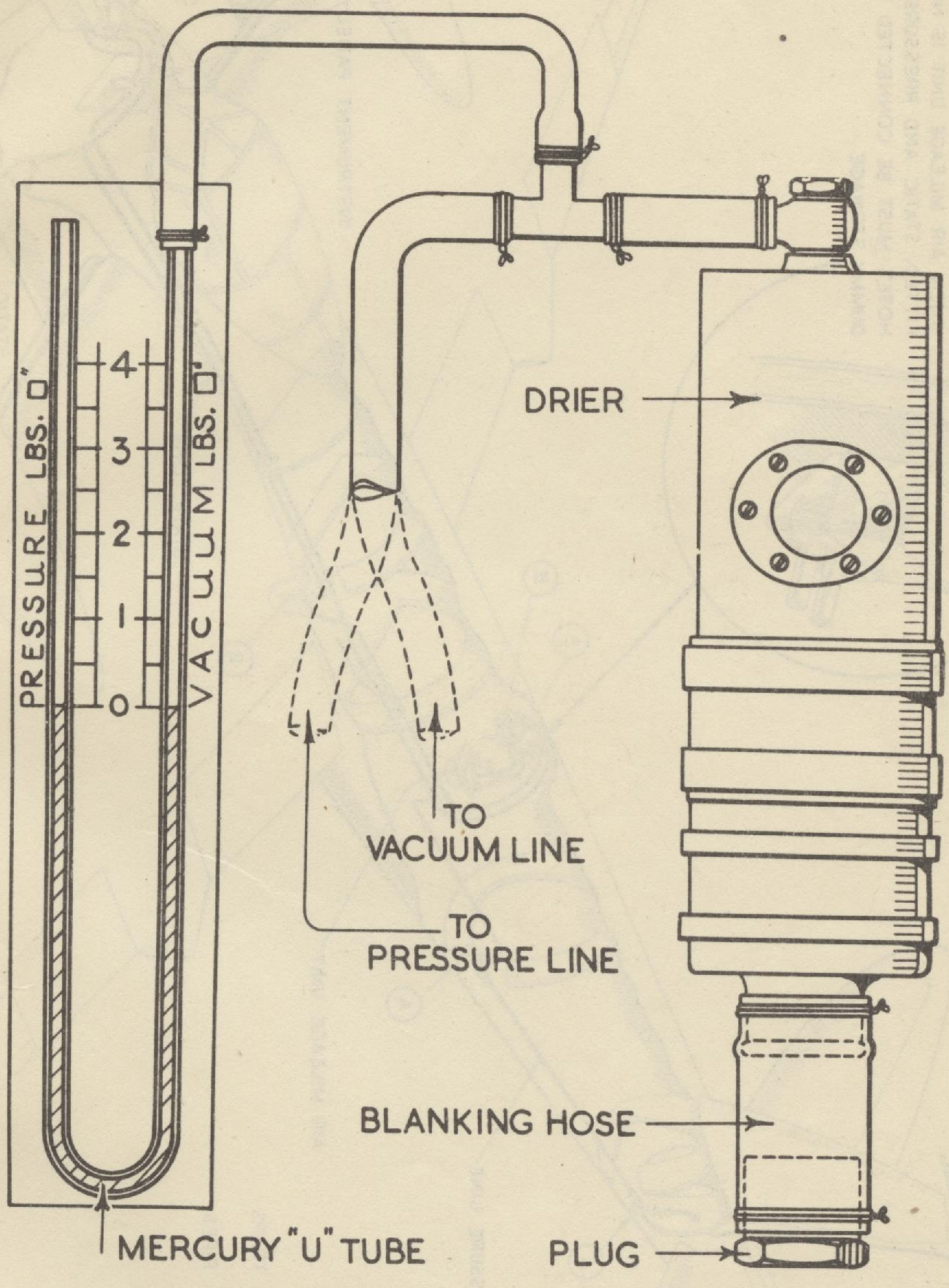

FIG. 36 TESTING AIR DRIER

G1371 M24243 7/49 550 C.B.& S.Ltd. Gp.55.

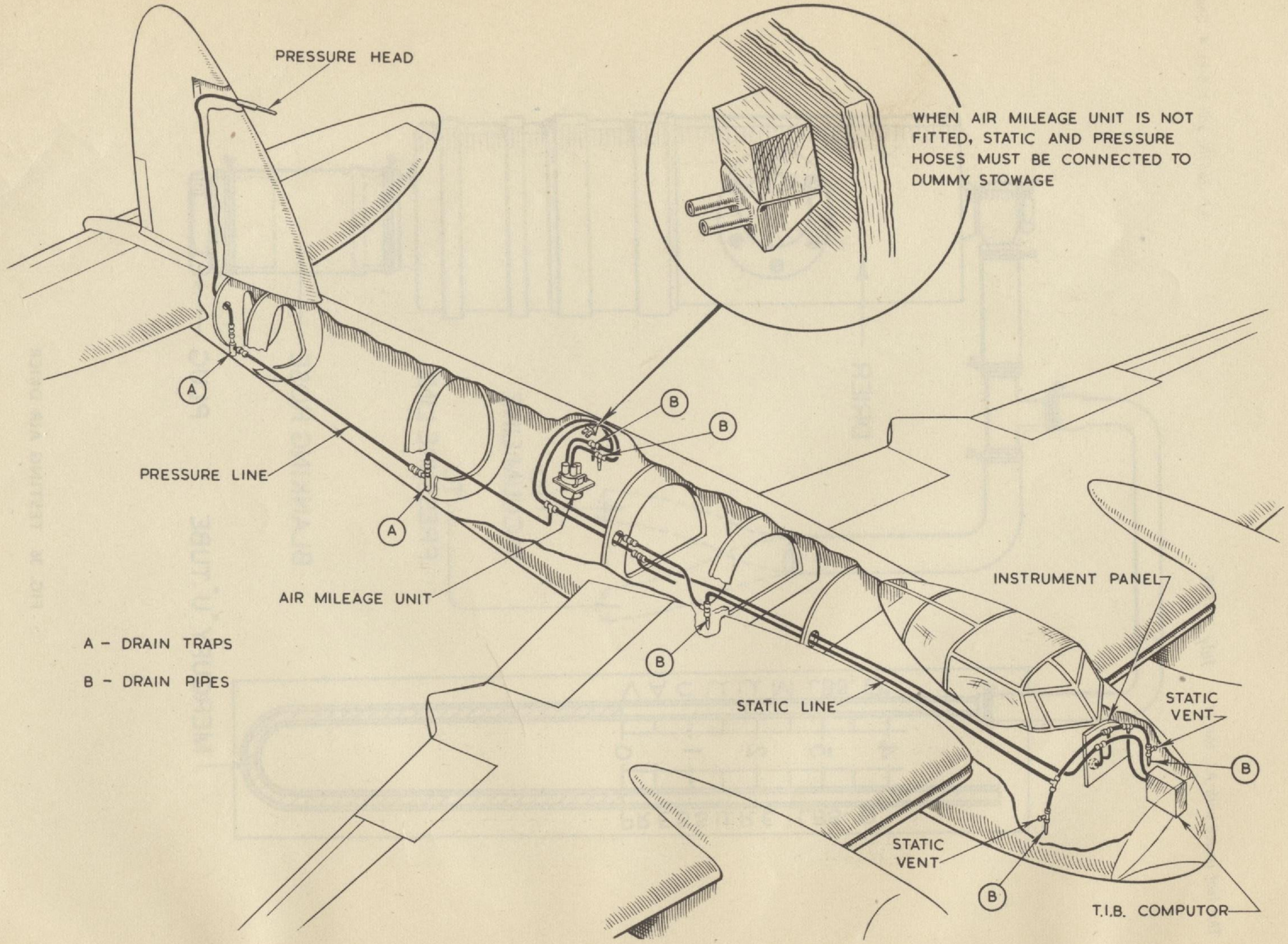

FIG. 37 A.S.I. SYSTEM

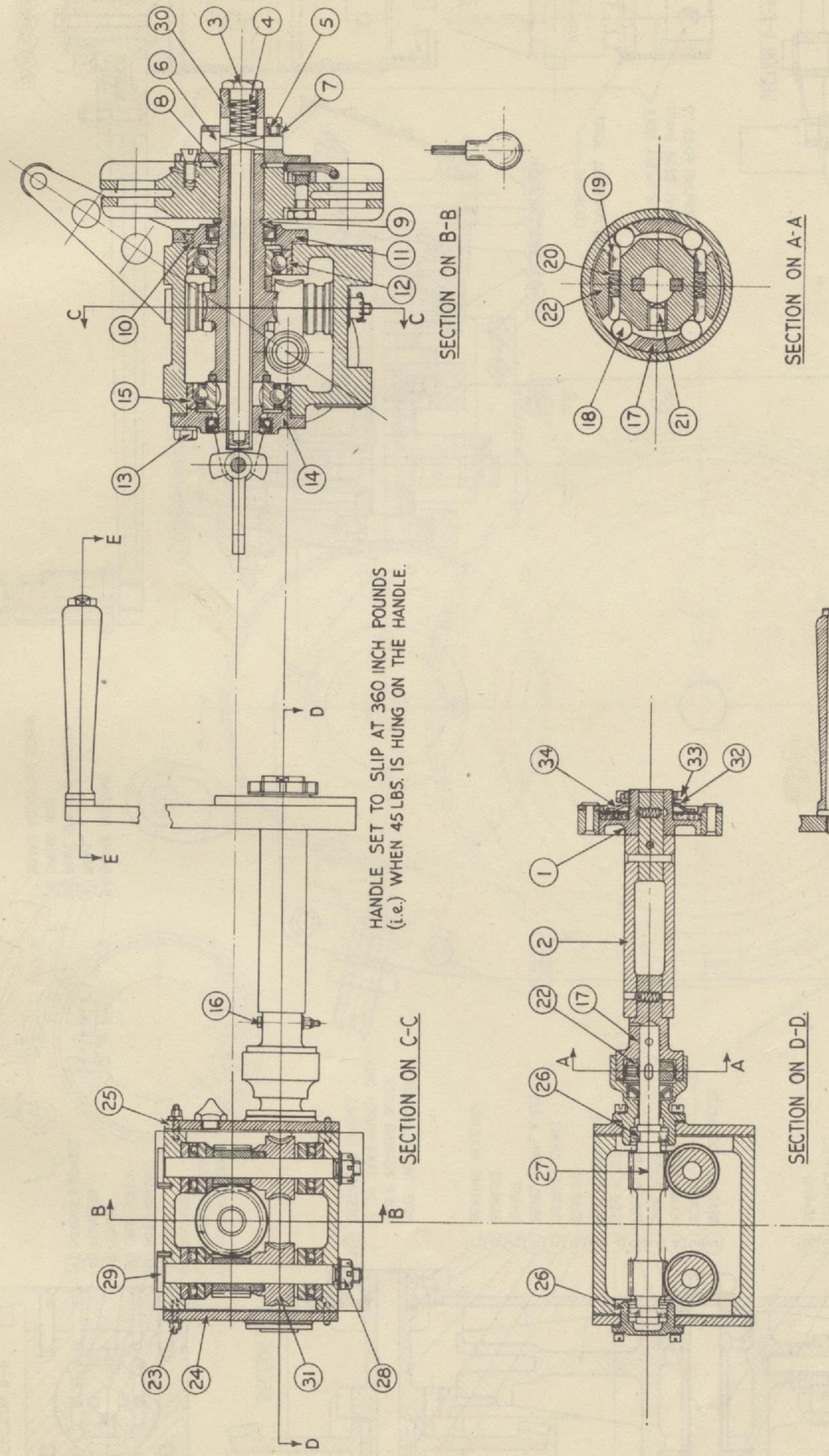

FIG. 38 500 LB. BOMB WINCH

G1371 M24243 7/49 550 C.B.& S.LTD. GP.55.

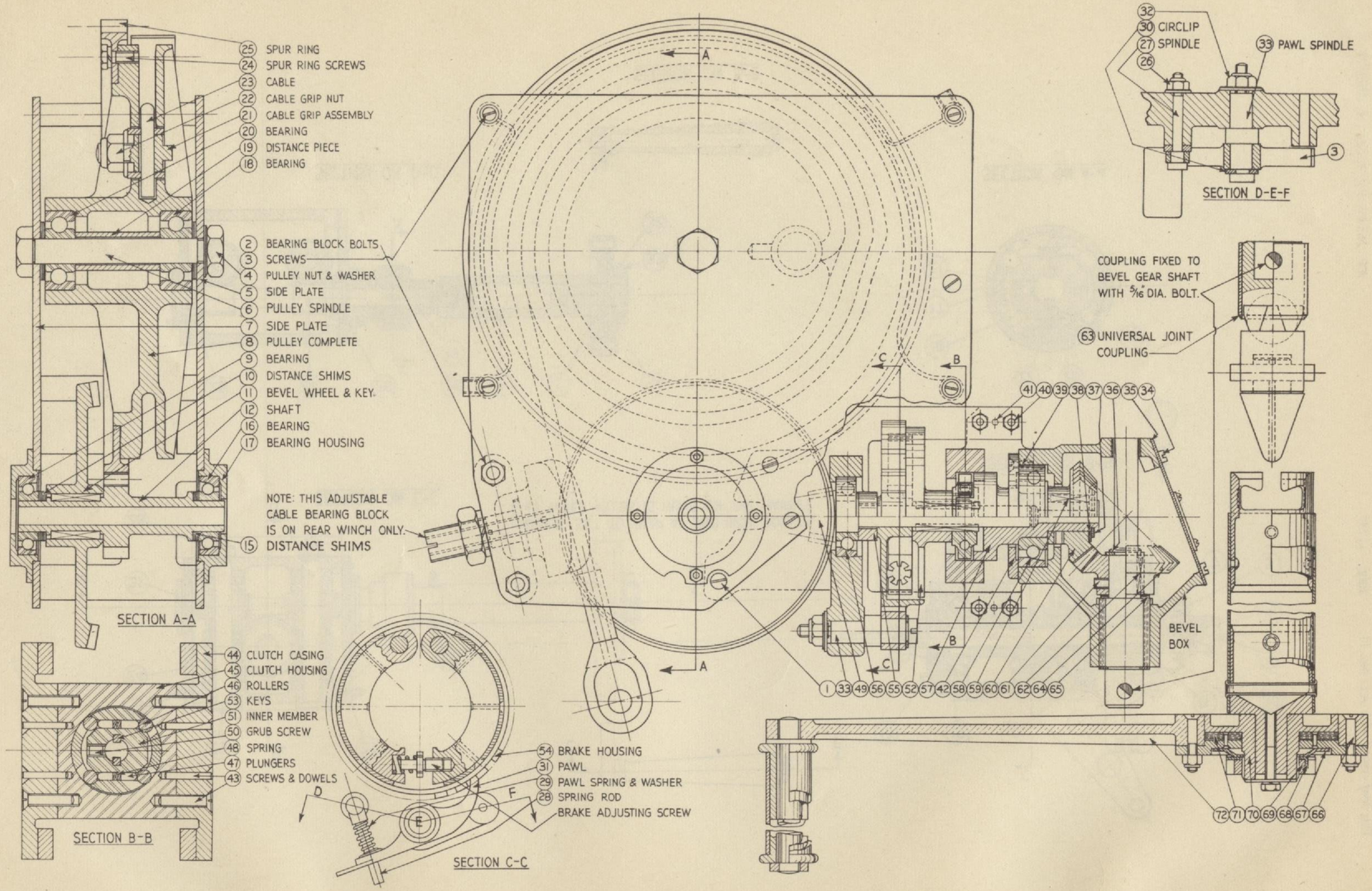

FIG. 39 2,000 LB. BOMB WINCH

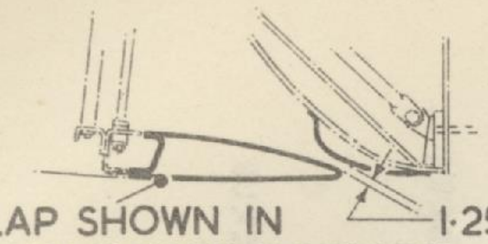

DETAIL B
RADIATOR FLAP SETTING

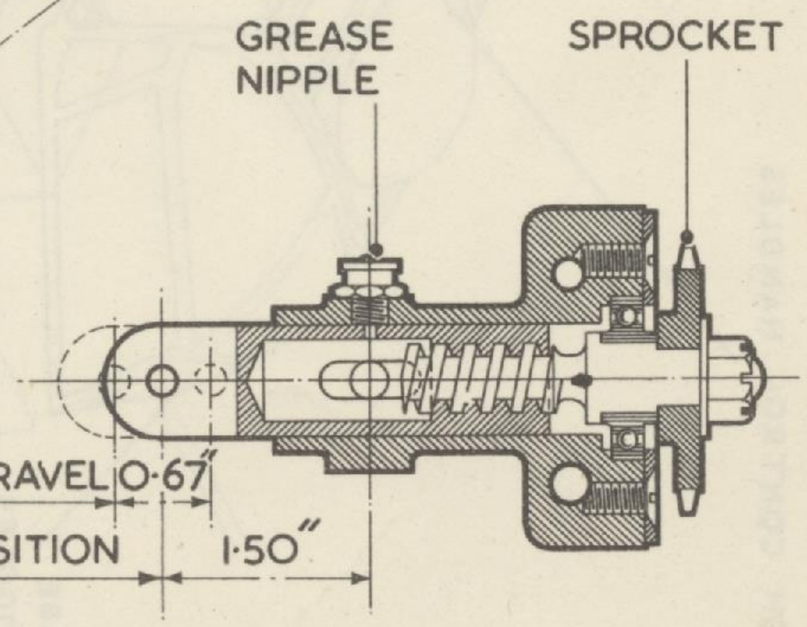

DETAIL A—SECTION THROUGH SCREW JACK

FIG. 40 RADIATOR FLAP CONTROL

7876 68203 1/53 450 C. B. & S. LTD. GP.55

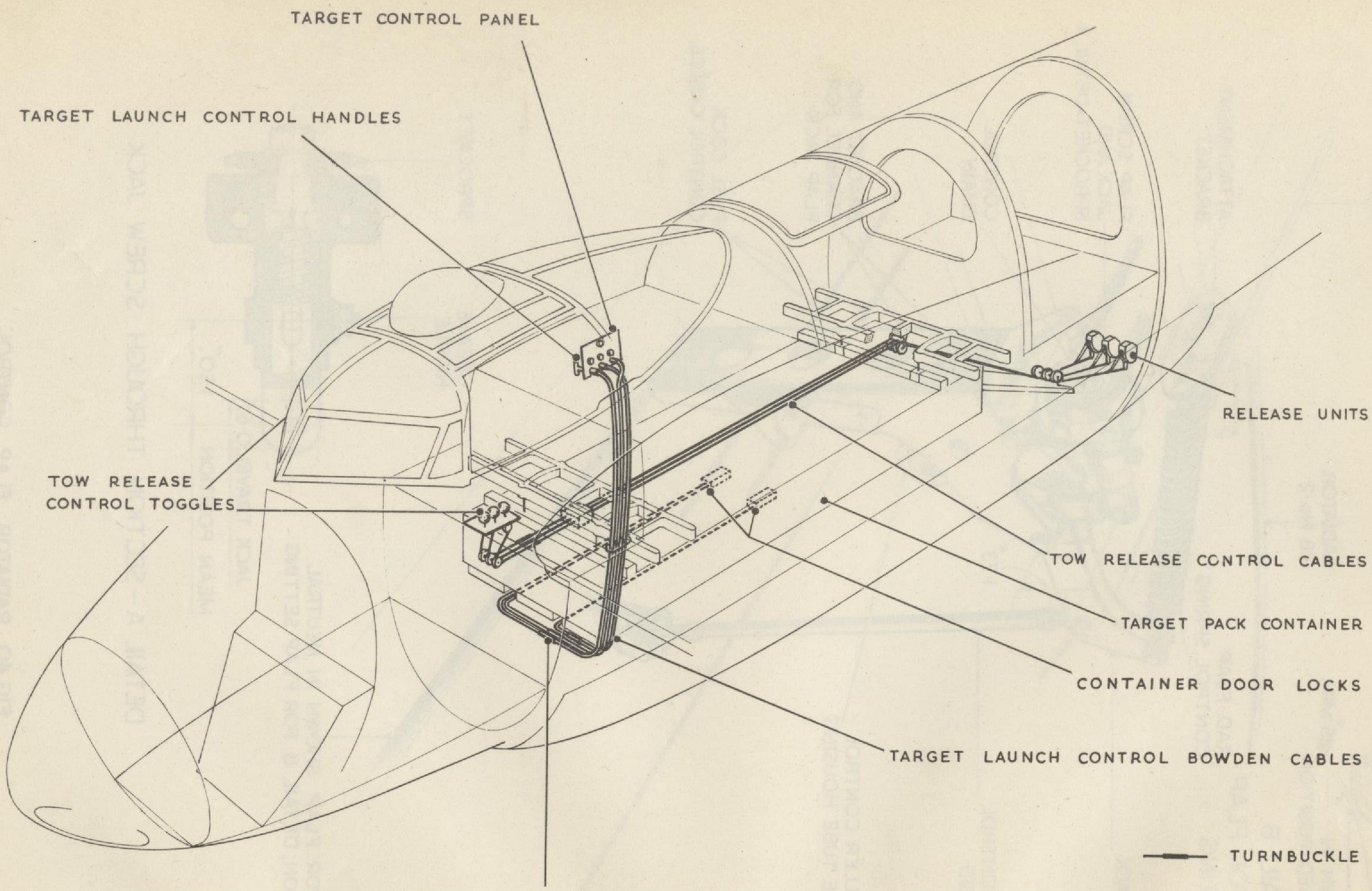

FIG.41 TARGET TOWING CONTROLS

This leaf issued in reprint
December, 1947

SECTION

5

REMOVAL, ASSEMBLY AND DISMANTLING OPERATIONS

123 M/C M45854 2/48 200 C.B.& S.Ltd. Gp.30

Section 5

REMOVAL, ASSEMBLY AND DISMANTLING OPERATIONS

LIST OF CONTENTS

	Para.
Introduction	1
Propellers	2
Cockpit canopy	3
Coolant header tank	5
Intercooler radiator	7
Oil tanks	8
Long-range oil tank	10
Tail wheel unit	
Removal	11
Assembly	12
Tail wheel	13
Ailerons	
Removal	14
Assembly	15
Nacelle fairing under wing	16
Tail fairing cone	17
Elevators	
Removal of port elevator	18
Assembly	19
Rudder	
Removal	20
Assembly	21
Fin	22
Tail plane	23
Assembling a new tail plane	24
Hydraulic system	
Reservoir	25
Hydraulic pipes	26
Jacks	27
Fuselage and wing	
Removal	28
Assembly	31

LIST OF ILLUSTRATIONS

	Fig.
Starboard side panel	1
Forward joint—side panel	2
Pulley bracket assembly on port side	3
Floor and fuselage joint	4
Rear spar to fuselage joint	5
Rear spar locating bracket	6
Front attachment joint, wing to fuselage	7
Removal of fuselage from wing	8
Removal of engine cowling	9
Engine exhaust system	10
Power plant	11
Radiator installation	12
Dismantling and assembly of radiators	13
Flap hinge joints	14
Flap details	15
Wheel door "up" lock	16
Wheel door mechanism	17
Testing wheel door cables	18
Centre fuel tanks	19
Wing fuel tank—No. 2 port side	20
Undercarriage top structure and engine mounting pick-up brackets	21
Bomb doors removal	22
Erection of lifting gantry	23
Engine and propeller lifting gantry	24
Engine slinging	25
Transport of fuselage	26
Transport of wing	27
Minimum packing dimensions	28

Introduction

1. In this Section the removal operations are described in detail, either in the text at the beginning of the Section, or in association with the illustrations, and, unless specific instructions are given, the assembly operations will be in the reverse order. Slings, jacks, and other special items of equipment are listed in Sect. 4, Chap. 3, of this publication. The trestling of the various parts of the aircraft is illustrated in Sect. 4, Chap. 3. On aircraft fitted with target towing equipment the method of removing the target pack container and release units is described in Sect. 4, Chap. 3.

Propellers

2. The handling of propellers is dealt with in A.P.1538D, Vol. 1. An extension strut on the power plant gantry (*fig.* 23) may be used for propeller slinging; sling, Stores Ref. 26BY/5029, is supplied for use in conjunction with the gantry.

Cockpit canopy

3. To gain access to the screws and bolts attaching the canopy to the fuselage, it will be necessary to remove some of the equipment mounted on the wing upper decking. Do not remove the equipment mounted on the bomb panel as it is preferable to detach the bolts securing the panel support bracket to the canopy structure. Disconnect the electrical cables to the roof lamp at the nearest terminal block and remove the control units. Type 89 and 90, if fitted. Detach the dinghy manual release cable from its fairleads and the dry air hoses at the canopy and windscreen panels, sealing the hoses and fitting Schrader blanking caps to the panel connections. Disconnect the D.R. compass repeater mounting bracket, and the Teleflex rudder trim control unit from the windscreen centre pillar, supporting the conduits against the repeater mounting bracket. Starting from the rear of the canopy, remove the screws and bolts, inside and outside, securing the canopy to the fuselage. Check to ensure that all connections have been removed, then starting from the rear end, raise the canopy slightly and break the joint between the rubber sealing strips and the fuselage. Care must be taken when doing this as damage may be caused if the canopy is lifted too much. When the joints have been broken, the canopy may be lifted clear of the fuselage.

4. When assembling the canopy, reverse the dismantling instructions. It may be necessary to use fresh sealing strips, which should be attached to the canopy with the approved jointing medium.

Coolant header tank

5. To remove the tank, first drain the system when cool, then proceed as follows :—

(1) Disconnect the Avimo couplings from the top of the tank.

(2) Disconnect the Avimo coupling from the tank outlet connection.

(3) Disconnect the coolant temperature electrical lead from the transmitting bulb.

(4) Disconnect the bonding leads.

(5) Uncouple the tank cradle straps and remove the tank.

6. When fitting a new tank, ensure that the Avimo coupling flanges of the tank and the cylinder block outlets line up when the tank cradle straps are tight; check at the same time that there is no metallic contact between the cradle and the tank. Slacken the cradle straps, fit the Avimo couplings and tank bonding, retighten and lock the cradle straps and connect the coolant temperature electrical lead.

Intercooler radiator

7. To remove the intercooler radiator :—

(1) Drain the intercooler system (*Sect.* 4, *Chap.* 2).

(2) Disconnect the Avimo couplings at the radiator and the generator cooling duct from the forward portion of the cowling.

(3) Release the Dzus fasteners and bolts holding the cowling to the rails and the propeller spinner back plate.

(4) Disconnect the radiator vent pipe.

(5) Unlock and unscrew the two radiator support tensioners.

(6) Remove the screws at the tensioner top trunnion blocks, and the bolts holding the radiator support fittings on the opposite side of the cowling.

(7) Lift the radiator clear of the cowling.

OIL TANKS

8. To remove a main oil tank, drain the oil while still hot (*Sect.* 4, *Chap.* 2) and disconnect the following items from the tank :—

(1) Bonding tags.

(2) Hydraulic oil supply pipe

(3) Main oil supply pipe

(4) Return pipe from oil cooler.

(5) Long-range oil transfer pipe.

(6) Vent pipe to the engine.

(7) Unfasten the tank supporting straps, lift and turn the tank while withdrawing it between the undercarriage radius rods.

9. After fitting an oil tank, it is important to retract the undercarriage by the hand pump to check the clearance between the radius rod and the tank. To prevent the wheel doors closing during the test, disconnect the retraction cables.

Long-range oil tank

10. To remove this tank, refer to Sect. 4, Chap. 2, where the draining and installation of the long-range tank is described. The removal instructions are the reverse of those given for the installation. After installing the oil tank, it is essential that the pressure tests described in Sect. 4, Chap. 3, should be effected, with the following differences. The test gauge quoted as being fitted to the air transfer pipe, should be fitted to a modified tank filler cap. The oil transfer cocks, the fuel transfer cock and the T.I.B. computor air cock should all be set to OFF.

TAIL WHEEL UNIT

Removal

11. To remove the tail wheel unit assembly :—

(1) Support the rear end of the fuselage (*Sect.* 4, *Chap.* 2).

(2) With the tail wheel fully 'down,' remove the jack ram bolt from the top of the shock-absorber unit.

(3) Remove the main hinge bolt at the bottom of the shock-absorber casting and withdraw the tail wheel unit.

Assembly

12.

(1) Offer up the tail wheel unit and insert the main hinge bolt.

(2) Set the undercarriage lever DOWN, and using the hand pump, extend the jack ram. Fit the locking caps on the undercarriage jacks.

(3) With the tail wheel fully 'down' and the down-lock plunger engaged in the locking socket, connect the jack ram to its attachment point, making sure that the bolt is an easy turning fit by adjusting the jack ram eye end. When satisfactory, remove the bolt, extend the eye end one half turn and replace the bolt. Tighten the ram eye end lock-nuts.

(4) Check that the lock plunger engages in the locking socket a minimum of 0·4 in. and, if necessary, adjust on the plunger spring tension bolt until the white indicator groove is visible between the top of the plunger housing and the base of the socket. When the plunger is withdrawn, the top must not project above the housing.

(5) Retract the tail wheel and, when the ram has completed its travel, adjust the 'up' stops until they contact the tail wheel fork, then unscrew them one complete turn.

(6) Move the undercarriage selector lever to 'neutral' and check that the clearance between the tail wheel fork and the 'up' stops is 0·10 in. Tighten the 'up' stop lock-nuts.

Note . . .

The jack ram stroke is 3·85 *in.*

Tail wheel

13. To remove the tail wheel from the fork :—

(1) Jack the rear end of the fuselage.

(2) With the tail wheel locked in the 'down' position, remove the tie-rod holding the axle securing caps and detach the caps.

(3) Withdraw the axle tube from the wheel fork and remove the wheel.

AILERONS

Removal

14. To remove the ailerons proceed as follows :—

(1) Lock the control column centrally with the locking device.

(2) Open the inspection covers over the differential pulleys in the wing and disconnect the operating rods at the pulleys.

(3) Disconnect the bonding wires.

(4) Remove the upper and lower inspection covers at the inner end of the ailerons and disconnect the trim tab operating rod at the tabs.

(5) While supporting the ailerons withdraw the vertical hinge bolts and remove the ailerons.

(6) Replace the hinge shims, bolts and nuts in the order of removal.

Assembly

15. To assemble the ailerons to the wing:—

(1) Offer up the aileron and fit the vertical hinge bolts.

(2) Adjust the shims as necessary so that the contour is in alignment with the wing, and maintain the shroud gap to within 0·16 in. ±0·04 in. (*Sect.* 4, *Chap.* 3). Care must be exercised to avoid distorting the hinge brackets.

(3) With the control column locked centrally, connect the aileron and trim tab operating rods.

Note . . .
The operating rod must be assembled with the offset end as shown in Sect. 4, *Chap.* 3.

(4) Set the trim tab control in the cockpit at NEUTRAL. Connect the port tab operating rod and adjust to align the tab with the aileron when the latter is at the neutral setting.

(5) The starboard aileron tab is aligned by adjusting the tab operating rod while the aileron is in the neutral position.

Note . . .
Full details of the aileron and aileron trim tab adjustments are given in Sect. 4, *Chap.* 3.

NACELLE FAIRING UNDER WING

16. The procedure for removal is as follows :—

(1) Remove the access panel on top of the wing at the rear of the nacelle.

(2) Remove the bolt and two spring-loaded cable shackle pins from the bracket on the lower side of the rear spar.

(3) Remove the clips holding the fairing to the undercarriage structure rear bracing struts and unclip the outer tanks fuel hose from the fairing.

(4) Disconnect the electrical leads to the extinguisher bottles at the plug on the fairing bulkhead, and the fire extinguisher pipes ; also the accessories drain tank vent pipe at the rear of the firewall.

(5) Remove the line of screws joining the fairing to the firewall and support the fairing while the screws are removed along the top edge of the fairing.

(6) When all the screws have been removed the fairing can be lowered clear of the wing and undercarriage structure.

TAIL FAIRING CONE

17. To remove the tail fairing cone :—

(1) Remove the undershield from the cone.

(2) Disconnect the electric cables to the tail navigation lamp at the socket on the rear fuselage bulkhead.

(3) Disconnect the bonding lead.

(4) Remove the three screws on each side of the fairing and the screws attaching the fin fairing to the cone.

(5) Release the fasteners on the nnderside of the fairing.

(6) With the elevators in the ' down ' position, withdraw the cone fairing.

ELEVATORS

Removal of port elevator

18.

(1) Withdraw the tail fairing cone (*para.* 17).

(2) Remove the nuts and washers securing the tab trunnion levers to the tab jack, and disconnect the bonding.

(3) Remove the bolt holding the trunnion levers to the torque tube connection.

(4) Disconnect the elevator control cables from the lever on the torque tube or remove the bolts attaching the lever to the tube.

(5) Remove the four bolts from the centre hinge to the elevator spar tube coupling.

(6) Support the weight of the elevator, withdraw the vertical bolt at each hinge and remove the elevator.

Note . . .

(*a*) *Before withdrawing the elevator, ensure that the tab trunnion lever is free from the jack.*

(*b*) *When removing the starboard elevator, first detach the mass balance arm from the spar tube, and then proceed as for the port elevator.*

Assembly

19. The assembly of the port and starboard elevators is idential apart from the

mass balance arm and the control lever. When fitting elevators, the mass balance arm should be attached to the starboard elevator, and the control lever to the port elevator, after final assembly to the tail plane, otherwise the procedure to be adopted is as follows :—

(1) Offer up the elevators and insert the bolt at the inner and outer hinge brackets, at the same time ensuring that the tab trunnion levers engage correctly with the jack. Lubricate the trunnion block with grease XG-275 (*Stores Ref.* 34B /22).

(2) Insert and tighten the four bolts at the centre hinge coupling and check the elevators for alignment.

(3) IMPORTANT. Check the shroud gap. This should be maintained at 0·10 ±0·05 in. Adjustment for gap is by means of laminum shims between the hinge bracket and the rear face of the tail plane rear spar.

(4) Fit the nuts and tighten the inner and outer hinge bolts, fit the nuts and washers securing the trunnion levers to the jack and the bolts attaching the trunnion lever to the tab torque shaft.

(5) Connect the bonding tags.

(6) Connect the elevator control lever to the port elevator and the mass balance lever to the starboard elevator.

(7) Connect the elevator cables to the control lever and refer to Sect. 4, Chap. 3 for rigging the control cables and final adjustments.

RUDDER

Removal

20.

(1) Disconnect the bonding tags and attach a clamp to the rudder trim control cables as close as possible to the tab jack drum.

(2) Slacken the rudder trim control cables in the port side of the bomb bay.

(3) Disconnect the following items (*Sect.* 7, *Chap.* 4).

(*a*) Connecting-rod C at servo lever F.
(*b*) Trim tab jack J at link lever E.
(*c*) Spring strut B and rudder lever D.

(4) Remove the rudder bottom hinge bolt.

(5) Support the rudder and remove the single transverse bolt at the top and centre hinges. Withdraw the rudder.

Assembly

21. For assembly, reverse the operations and refer to Sect. 4, Chap. 3 for the final adjustments.

FIN

22. To remove the fin :—

(1) Detach the tail guard cable (if fitted).

(2) Detach the fairing at the base of the fin.

(3) Disconnect the pressure head pipe at the joint on bulkhead No. 7, and the pressure head heater electrical cable at the terminal block on the same bulkhead.

(4) Disconnect the bonding lead at bulkhead No. 7.

(5) Support the fin and remove the front and rear attachment bolts at the base of the fin spars. These bolts hold split cone bushes expanded by taper bushes and in addition, the rear attachment brackets have distance tubes between them. Lift the fin clear of the brackets.

TAIL PLANE

23. To remove the tail plane, first detach the tail fairing cone (*para.* 17) and elevator (*para.* 18) and proceed as follows :—

(1) Place a supporting trestle under each side of the tail plane.

(2) Detach the tail guard cable (if fitted).

(3) Remove the cable guard cover plate, and disconnect the elevator trim control cables at the sprocket chain.

(4) Disconnect the bonding, and the elevator control cables.

(5) Disconnect the mudguard support tube at its attachment to the rear spar bottom support tubes by removing the four bolts from each split clip on the support tubes.

(6) Remove the lower elevator control pulley on the rear face of the front spar to free the elevator control cables.

(7) Remove the two horizontal bolts attaching the supporting struts to the front face of the rear spar.

(8) Remove the three horizontal bolts at the front spar attachment fittings. The two outer bolts hold split cone bushes expanded by tapered bushes.

(9) The tail plane can now be withdrawn clear of the fuselage.

Note . . .

Prior to assembling a tail plane, check that the distance between centres of all four support tubes is the same; adjust if necessary and verify that the screw ends are in safety. (Feeler holes drilled in the tubes).

ASSEMBLING A NEW TAIL PLANE

24. When fitting a new tail plane, the edges of the gap forward of the front spar will have to be trimmed to fit the fuselage side. Remove the minimum amount in order to keep the clearance as small as possible. When the fit is satisfactory, assemble the tail plane, reversing the procedure given in para. 23. After assembly, check and adjust the angle of incidence as described in Sect. 4, Chap. 3. If the tail plane incidence shows a discrepancy at the tips, the difference may be neutralized by adjustment of the support tubes to a tolerance of ± 10 minutes.

WARNING

The tail plane incidence is critical, and the instructions contained in Sect. 4, Chap. 3, must be fully implemented. The correct angle of incidence must be obtained from the Airframe Log Card.

HYDRAULIC SYSTEM

Reservoir

25. First drain the reservoir (*Sect.* 4, *Chap.* 3). Disconnect the main supply pipe, the hand pump normal and emergency supply pipes, and the vent pipe at their reservoir connections. Uncouple the securing straps and remove the reservoir. It may be necessary to release the vent pipe hose after slackening the reservoir securing straps.

Hydraulic pipes

26. The pipe layout is illustrated in Sect. 4, Chap. 3. Connections are made at convenient places throughout the system for removal and assembly of pipe lengths. After removing a unit or a pipe, all unions and pipes must be blanked off immediately. On assembly, care must be taken that all disconnected pipes are returned to their correct unions on the unit or pipe line. The pipe line code (A.P.1464D) is useful in this respect.

Jacks

27. It is not necessary to drain the hydraulic reservoir in order to remove any jack as there is very little fluid in the pipe lines. Set the selector levers to the DOWN position and disconnect the 'down' line, and to the UP position before disconnecting the 'up' line. The pipe connections should be unscrewed from the hose adapters and blanking plugs screwed into the open ends of both pipes and hoses. A tray held below the joints being disconnected will collect the small quantities of fluid that escape. Fluid in the jack should be ejected by moving the ram in and out.

FUSELAGE AND WING

Removal

28. The fuselage and the wing are each assembled as complete units. The following is the recommended procedure for removing the fuselage from the wing:—

(1) Drain the fuel oil, coolant and hydraulic systems and release the pressure in the pneumatic system.

(2) Disconnect and remove the 12-volt accumulators.

(3) Remove all wireless, radar and other equipment from the wing upper surface and in rear of the pilot's seat.

(4) Remove the dinghy stowage (*Sect.* 4, *Chap.* 2) to give access to components in rear of the draught-proof bulkhead.

(5) Remove the bomb bay doors (*fig.* 22).

(6) Remove the bomb carriers and the bomb carrier frames (*Sect.* 12).

(7) On aircraft in which Mod. 1619 and 1627 are embodied, disconnect the target pack container Bowden cables at adjusters, withdraw them through the fairlead on the navigator's floor and then tie them to the side of fuselage.

(8) On aircraft embodying Mod. 1619 and 1627 remove the target pack container and rear shelf (*Sect.* 4, *Chap.* 3).

(9) On aircraft incorporating Mod. 1619 and 1627, disconnect the release unit control cables at the turnbuckles in

the bomb bay, free them from the pulleys and fairleads, coil and tie the rear sections to bulkhead No. 4, and the foremost sections to the underside of the navigator's floor.

(10) Jack the aircraft in the rigging position and support the wings (*Sect.* 4, *Chap.* 3). Remove the power plants (*fig.* 11) if the wing is to be lifted for transport.

(11) Remove the radiator blocks (*fig.* 12 *and* 13), and the heater units by disconnecting the attachment bolts and screws at the front spar and fuselage end ribs.

(12) Disconnect the radiator flap control Teleflex cables at the tensioners, disconnect the conduits at the greasers in rear of the control units, remove the conduit clamp in rear of the greasers and withdraw the cables into the cockpit, coil and lash to the fuselage side.

(13) Disconnect and remove the engine and propeller control rods in the cockpit.

(14) Disconnect the boost pressure pipes at the rear of the engine control box.

(15) Disconnect, unclip and remove the vent pipes, the fuel and oil transfer pipes at the front spar and the draught-proof bulkhead, except the oil transfer air pipe which is cleated to the fuselage side ; this pipe is disconnected at the front spar only. Disconnect the fuel transfer air pipe from the rear of the draught-proof bulkhead.

(16) Disconnect the electrical leads at the Breeze sockets on the cockpit side of each fuselage end rib sealing panel.

(17) Disconnect the centre tank filler neck at the wing upper surface.

(18) Remove the fuel pipe fairings and fabric strips at the wing-to-fuselage joint.

(19) Disconnect the fuel hoses at each wing inner tank outlet, at the centre tank outlet, and at the unions on the forward end of ribs No. 1.

(20) Disconnect the hydraulic, vent and pneumatic pipes at the starboard side panel rear joint (*area* B, *fig.* 8), also the hydraulic and vent pipes at the connections below the rear spar on each side of the fuselage.

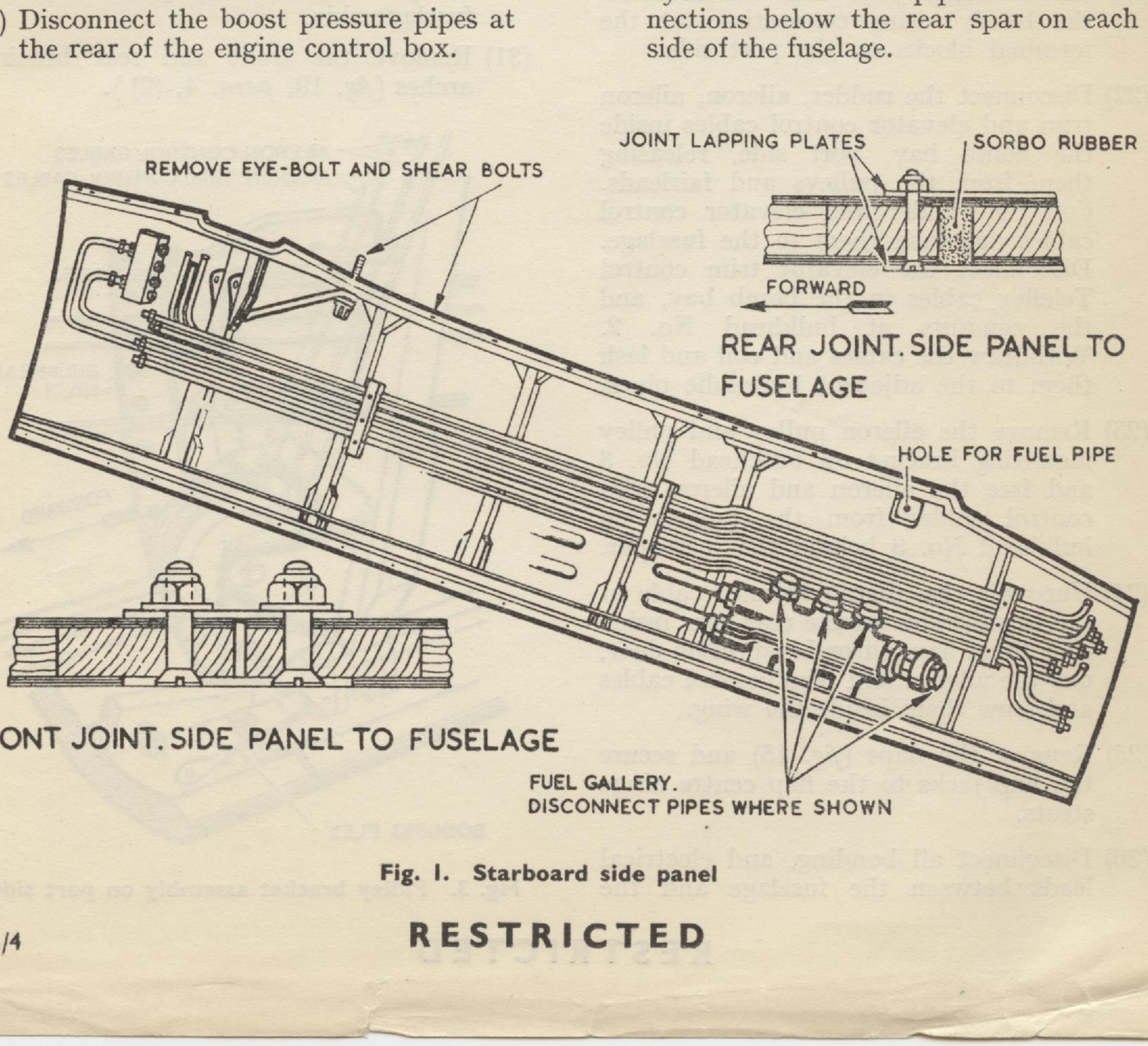

Fig. 1. Starboard side panel

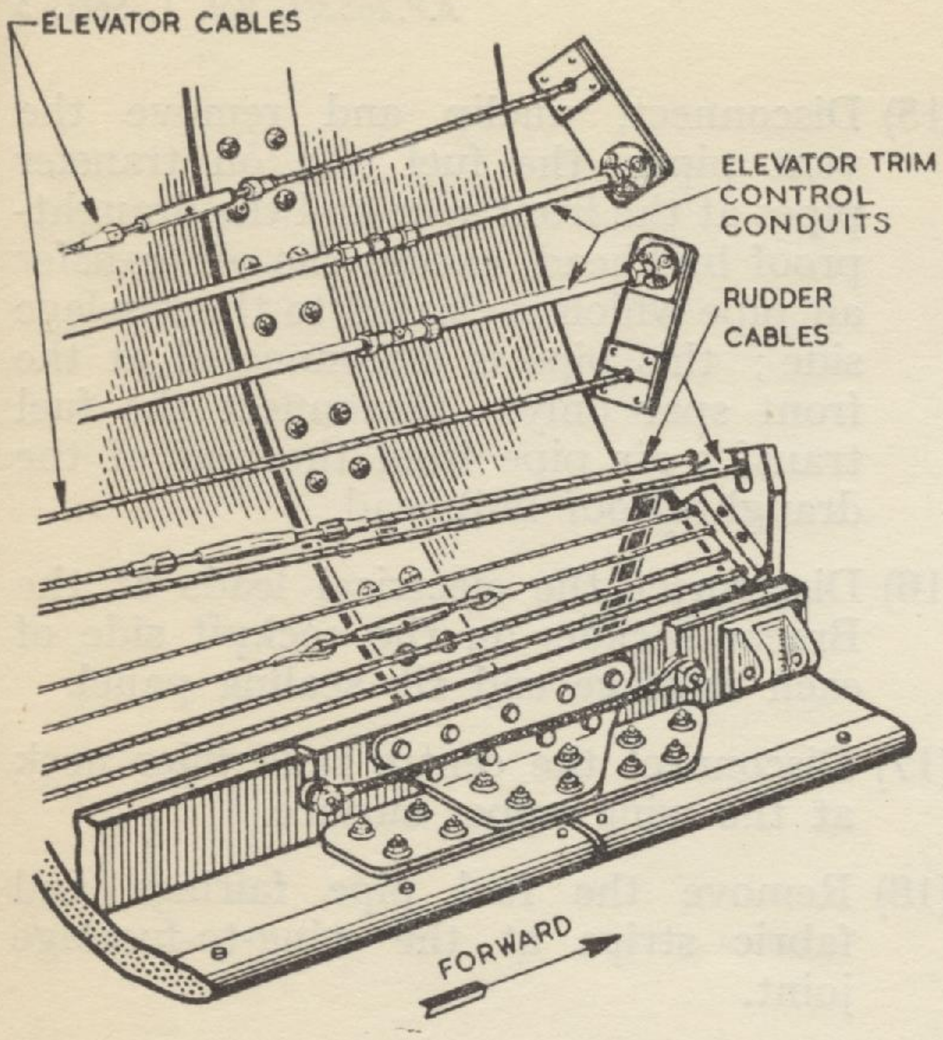

Fig. 2. Forward joint—side panel

(21) Disconnect the hydraulic, pneumatic, static vent and vacuum pipes near the starboard side fuselage panel front joint, and the hydraulic pipes on the fuselage, port side. Disconnect the bomb wiring connections at the terminal blocks on the port side.

(22) Disconnect the rudder, aileron, aileron trim and elevator control cables inside the bomb bay, port side, releasing them from the pulleys and fairleads. Coil the rudder and elevator control cables and lash them to the fuselage. Disconnect the elevator trim control Teleflex cables in the bomb bay, and the conduits at bulkhead No. 2. Withdraw the cables and coil and lash them to the adjacent hydraulic pipes.

(23) Remove the aileron pulley and pulley mounting bracket on bulkhead No. 3 and free the aileron and aileron trim control cables from the pulleys on bulkhead No. 3 behind the rear spar.

(24) Uncouple the aileron balance cable at the turnbuckles on the rear spar inside each inner flaps shroud inspection door, coil the aileron and trim control cables and stow them inside the wing.

(25) Remove the flaps (*fig.* 15) and secure the flap jacks to the flap centre hinge struts.

(26) Disconnect all bonding, and electrical leads between the fuselage and the wing at the junction boxes and terminal blocks. The disconnecting points will be found on the front and rear spars and near the side panel joints. The location of the bonding connections, junction boxes and terminal blocks is given in Sect. 6.

(27) Disconnect the stay tubes from the pilot's seat at the front spar eye-bolts, and the fuselage bracing strut at the navigator's armour.

(28) Place the spreader bar, Stores Ref. 26BY/5031, in position over the fuselage and arrange the lifting straps as shown in fig. 8 and 26.

(29) Remove the joint strip connecting the two sections of the floor between the top of bulkhead No. 2 and the front spar which is secured by bolts. Remove the joint plate on each side of the fuselage forward of the joint strip, held by two bolts and two screws.

(30) Remove the line of screws from the floor to the top of the front spar, securing the right and left-hand sealing panels to the fuselage and break the joint between the panels and the fuselage skin.

(31) Remove the front and rear bracing arches (*fig.* 19, *para.* 4, (2)).

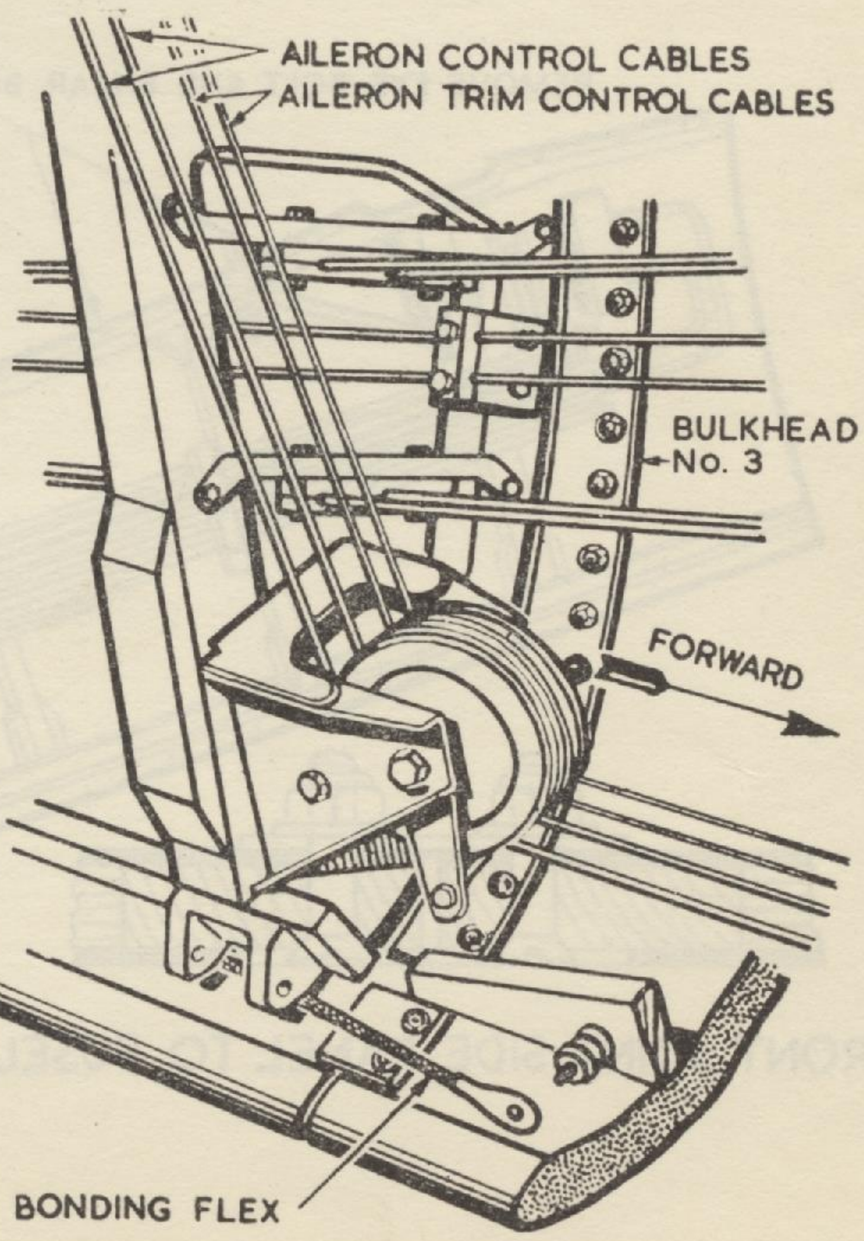

Fig. 3. Pulley bracket assembly on port side

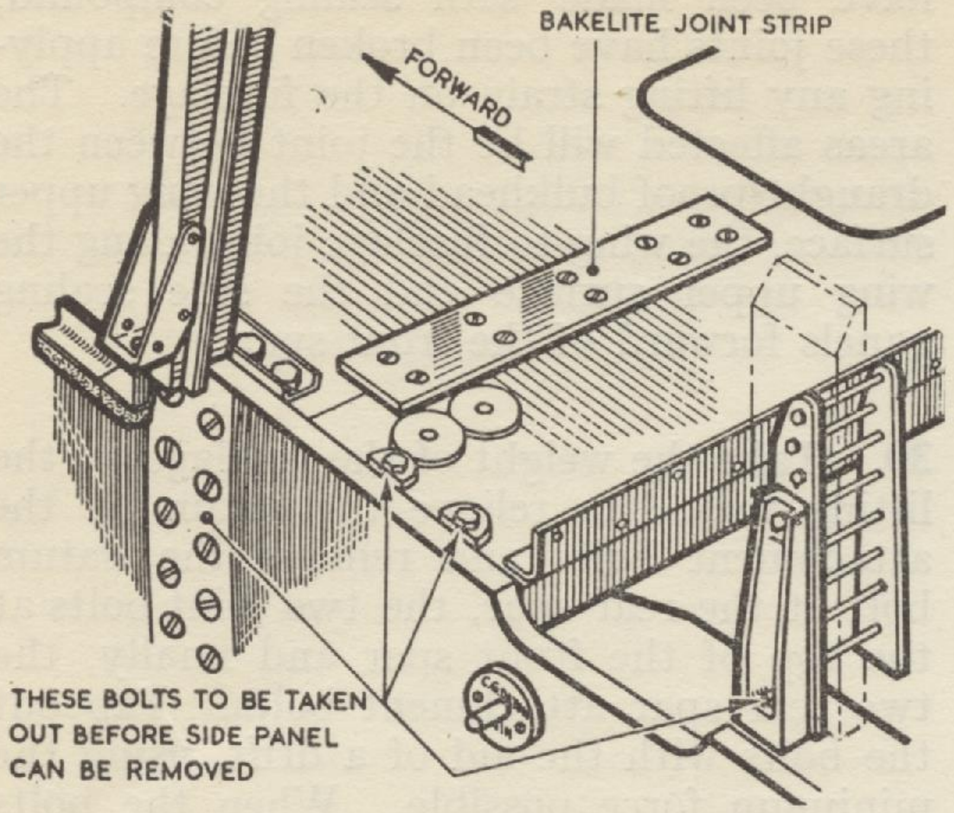

Fig. 4. Floor and fuselage joint

(32) Remove the fuselage side panels from the fuselage and wing ribs No. 1, by unscrewing the front joint lapping plate screws and slackening the screws holding the rear lapping plates to the side panels. Remove the shear bolts along ribs No. 1 and the bolts holding the side panels to the support brackets at the rear of the front spar. The bracing tube between each side panel and ribs No. 1 should be disconnected at the side panel ribs and at the No. 1 rib eye-bolt.

(33) Remove the ply fairing strip from the wing top surface at the fuselage joint. These strips start at the front spar and are secured by seven screws. Check that any jointing compound used for

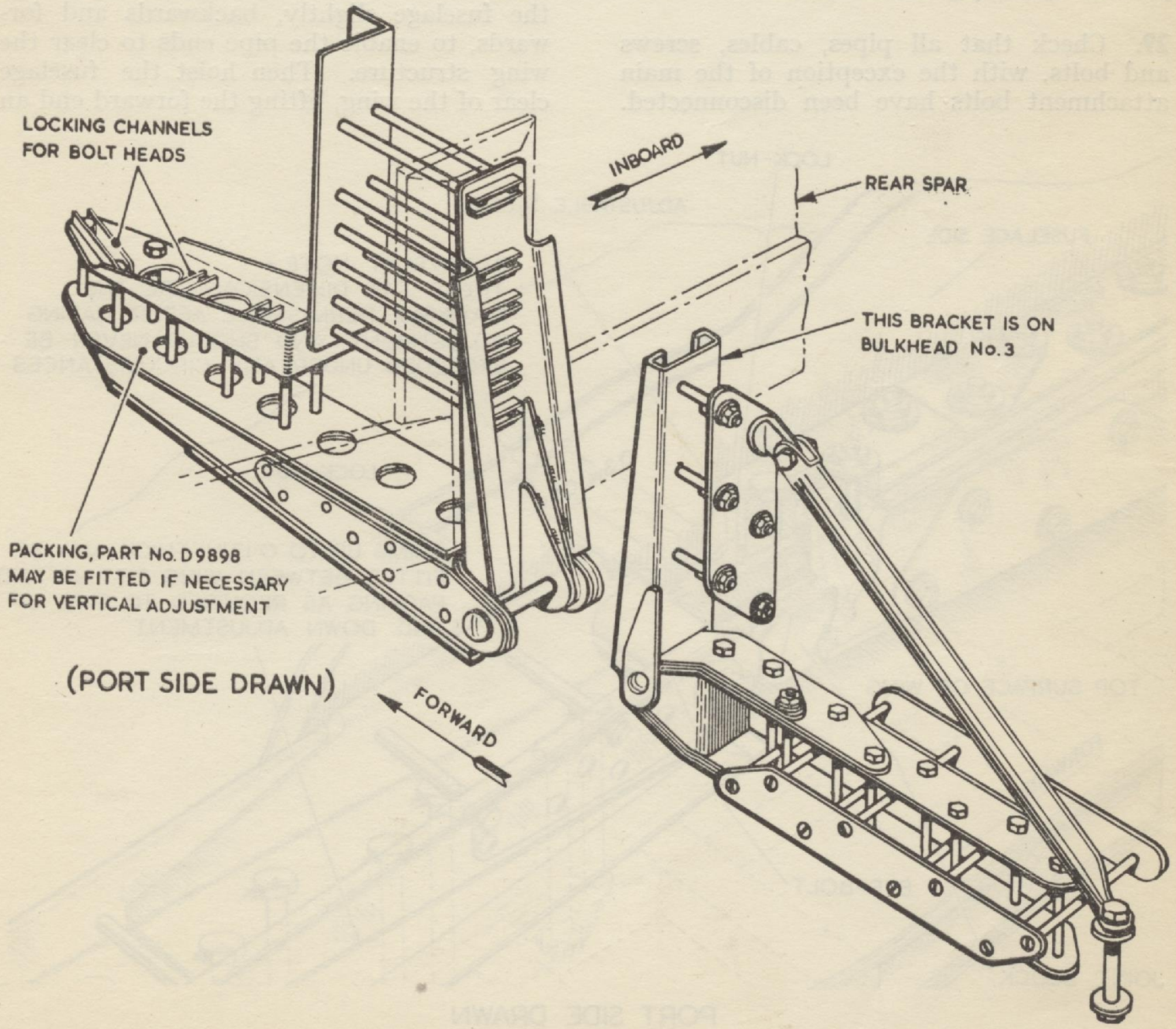

Fig. 5. Rear spar to fuselage joint

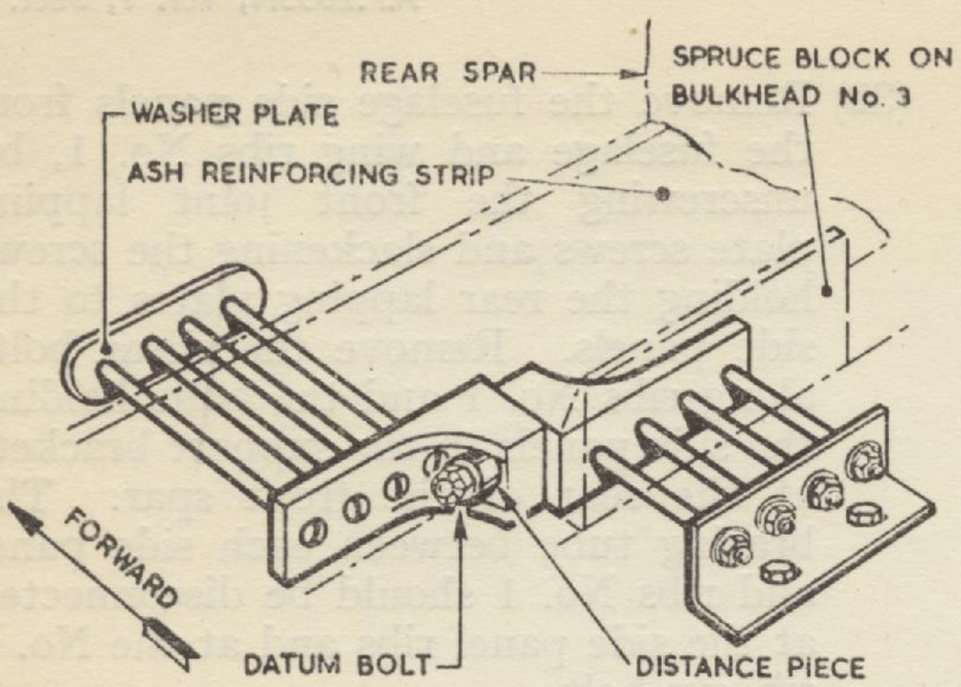

Fig. 6. Rear spar locating bracket

waterproofing the wing to fuselage joint is cleared.

Note . . .

For loading details and the transport of components refer to fig. 26, 27 *and* 28.

29. Check that all pipes, cables, screws and bolts, with the exception of the main attachment bolts have been disconnected.

It is essential to ensure that, where joints have been made with sealing compound, these joints have been broken before applying any lifting strain on the fuselage. The areas affected will be the joint between the draught-proof bulkhead and the wing upper surface, the wing to fuselage joint along the wing upper surface and the side sealing panels forward of the front spar.

30. Take the weight of the fuselage on the lifting tackle to relieve the strain on the attachment bolts and remove the datum bolt at the rear spar, the two joint bolts at the top of the front spar and finally, the two rear spar attachment bolts. Tap out the bolts with the aid of a drift, using the minimum force possible. When the bolts are free, have the diagonal jury frame, Stores Ref. 26BY/5033, handy on the wing upper surface and station four men, one at each corner of the bomb bay, to manipulate the fuselage slightly, backwards and forwards, to enable the pipe ends to clear the wing structure. Then hoist the fuselage clear of the wing, lifting the forward end an

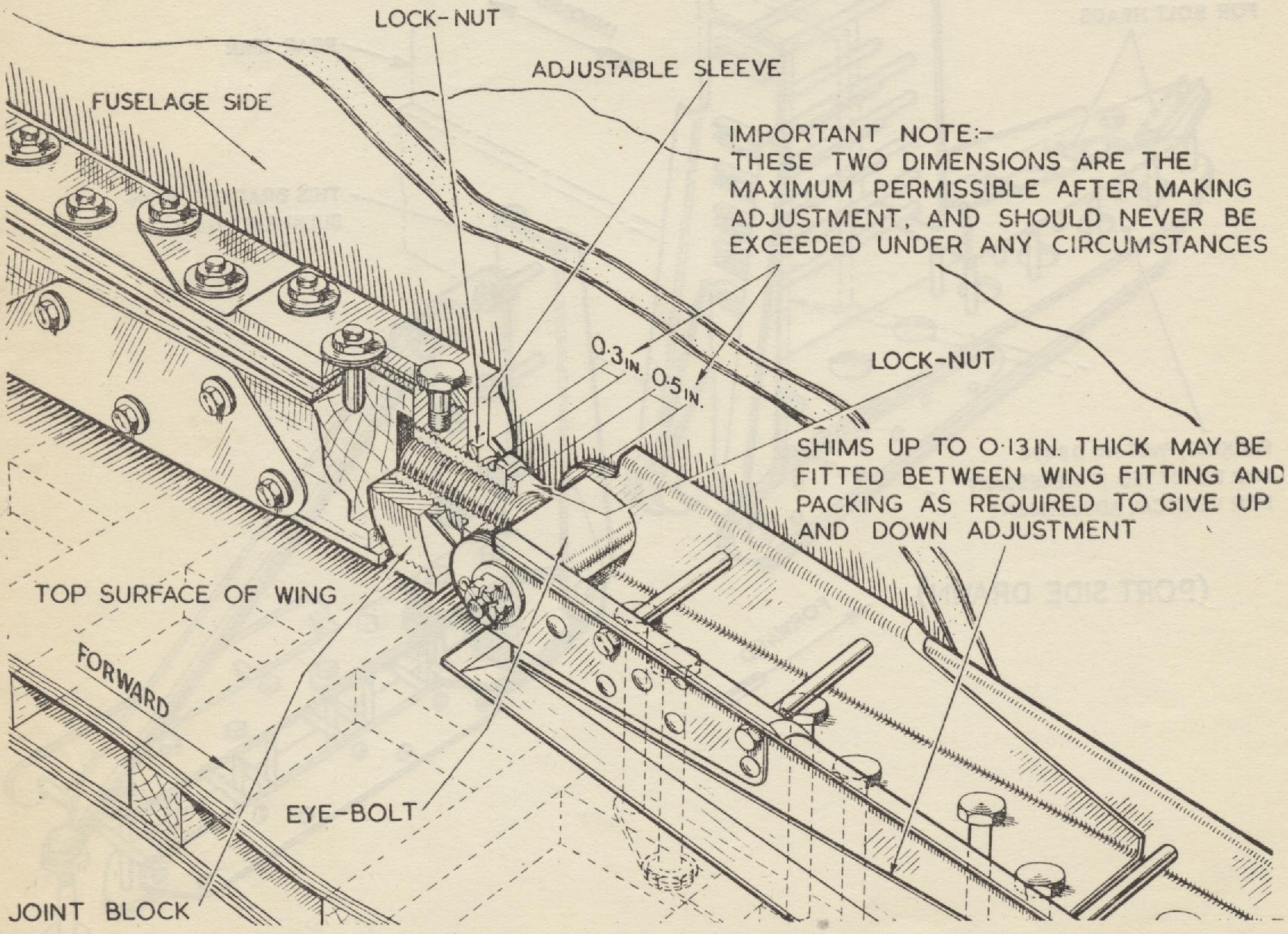

Fig. 7. Front attachment joint, wing to fuselage

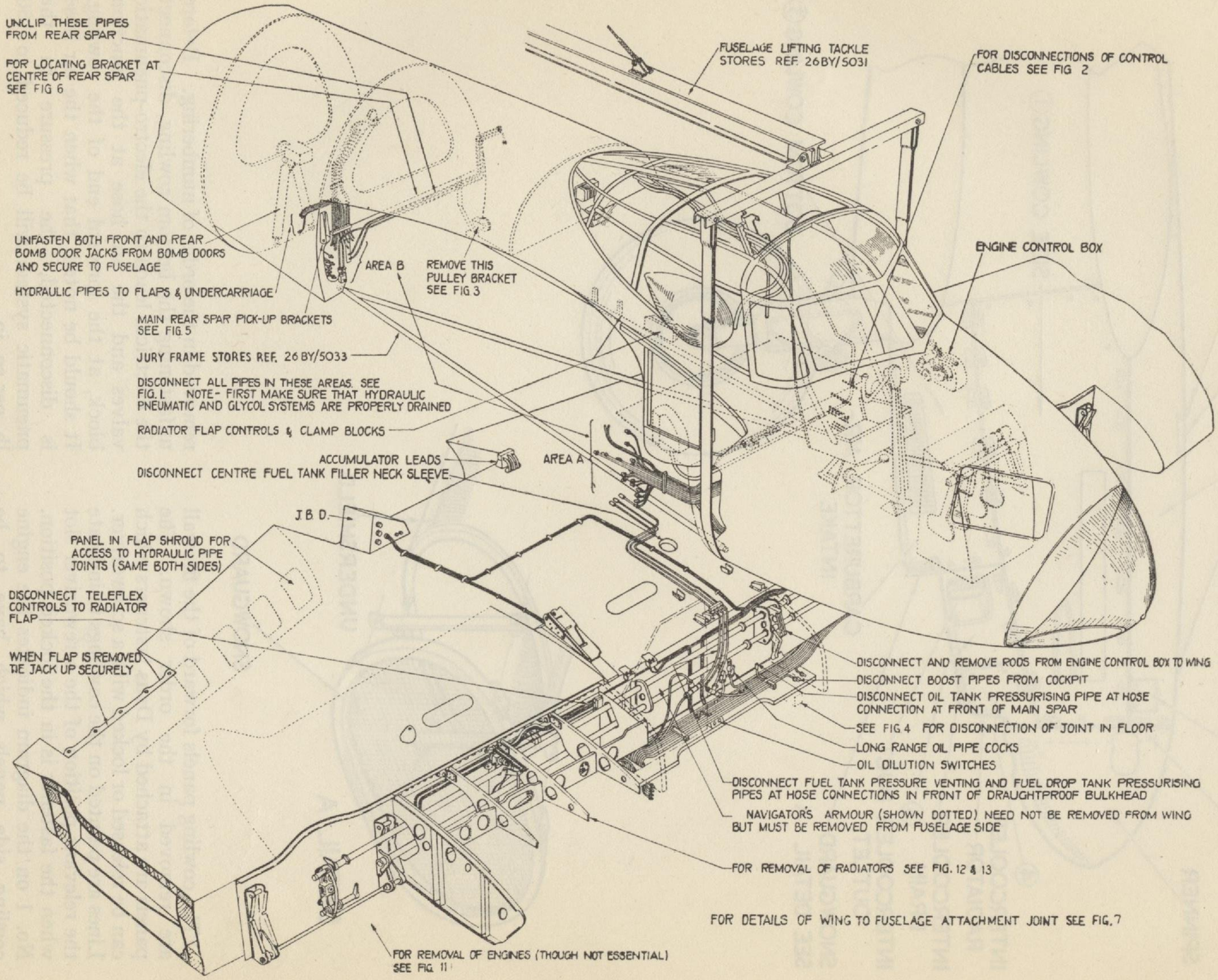

Fig. 8. Removal of fuselage from wing

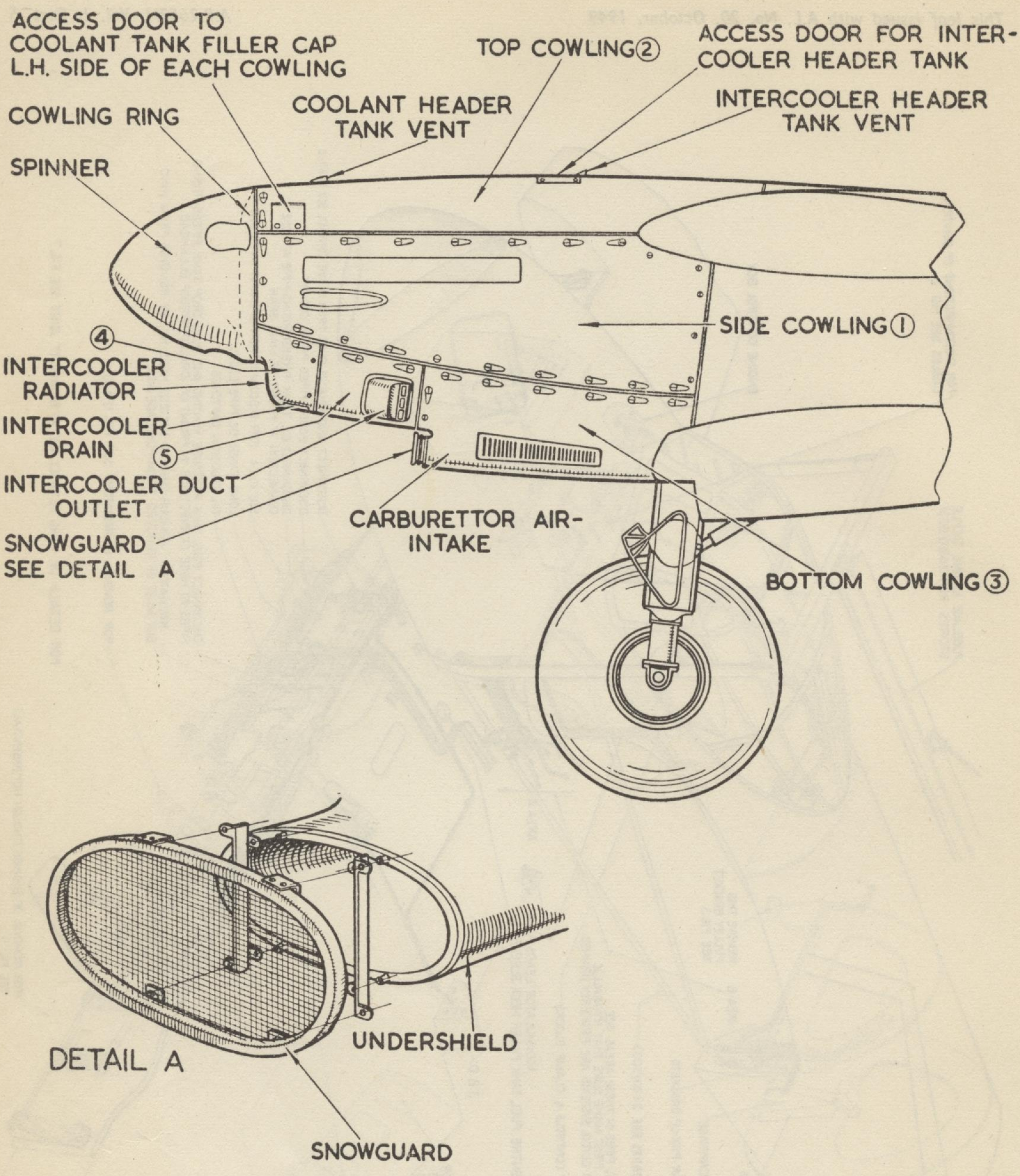

The cowling panels forward of the firewall are removed in the order shown. The panels are attached by Dzus fasteners which can be released or locked with a screwdriver. Lines are painted on the cowlings to indicate the relevant position of the screwdriver slot when the fastener is in the locked position. No. 1 on the diagram indicates the engine cowling side panels which have to be removed first. The remaining panels are removed in the order of numbering. Before unfastening the bottom cowling, disconnect the electrical leads to the electro-pneumatic valves and the air hose at the junction block, at the forward end of the cowling. It should be noted, that when the air hose is disconnected, the pressure in the pneumatic system will be reduced to 150 lb. per sq. in.

Fig. 9. Removal of engine cowling

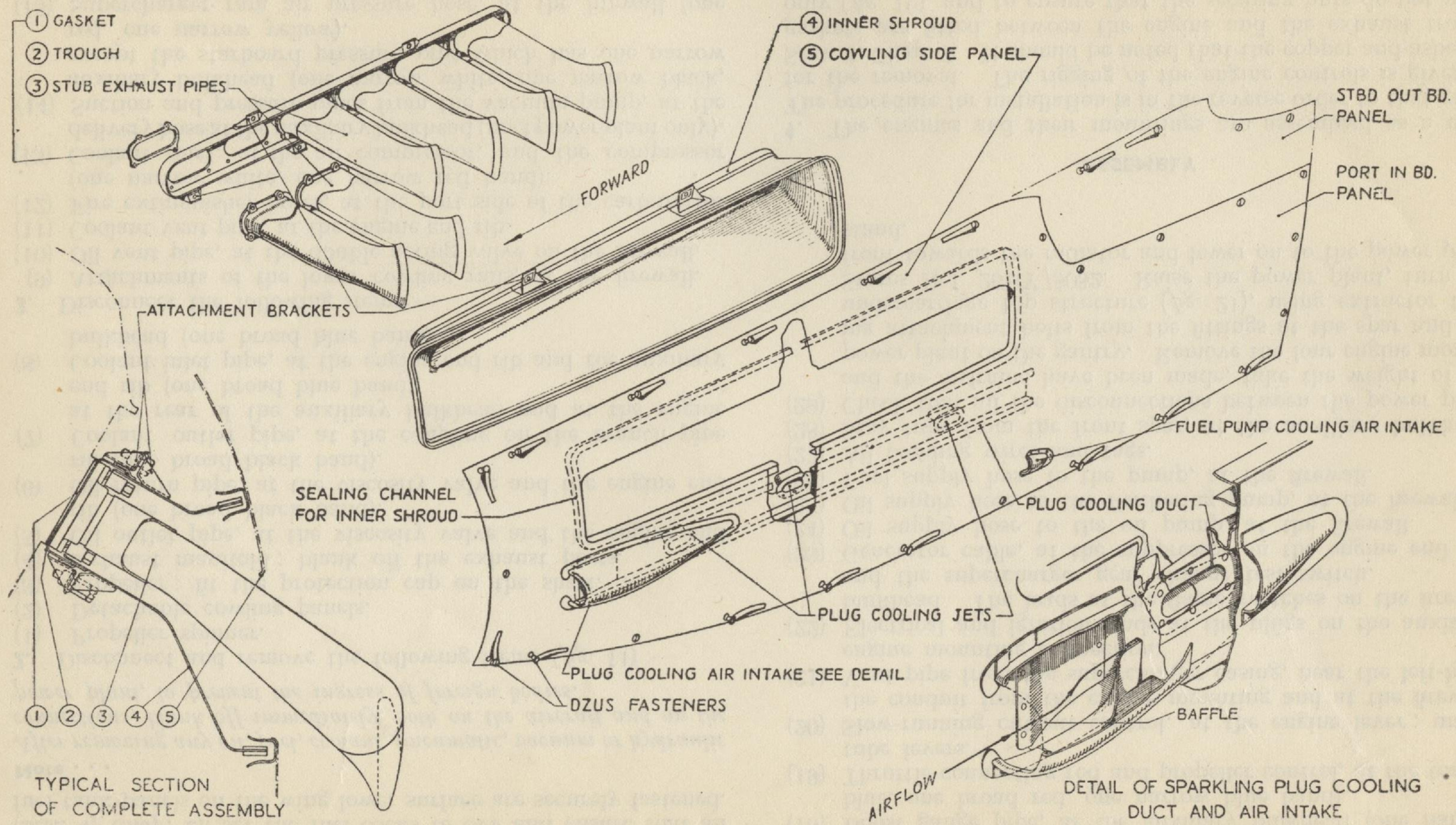

Fig. 10. Engine exhaust system

POWER PLANT REMOVAL AND ASSEMBLY (FIG. 11)

REMOVAL

1. Erect the engine gantry, drain the oil and coolant systems (*Sect.* 4, *Chap.* 2). set the fuel cocks to OFF and ensure that all fuel tank panels on the wing lower surface are securely fastened.

Note . . .

After removing any oil, fuel, coolant, pneumatic, vacuum or hydraulic connections, blank off immediately, both on the aircraft and on the power plant, to prevent the ingress of foreign bodies.

2. Disconnect and remove the following items (*fig.* 11) :—

(1) Propeller spinner.
(2) Detachable cowling panels.
(3) Propeller ; fit the protection cap on the shaft.
(4) Exhaust manifold ; blank off the exhaust ports.
(5) Oil outlet pipe, at the viscosity valve and the engine end rib (one broad black band).
(6) Oil return pipe, at the viscosity valve and the engine end rib (one broad black band).
(7) Coolant outlet pipe, at the coupling on the branch pipe at the rear of the auxiliary bulkhead and at the engine end rib (one broad blue band).
(8) Coolant inlet pipe, at the engine end rib and the auxiliary bulkhead (one broad blue band).

3. Disconnect the following items :—

(9) Attachments of the lower cowling rails, at the firewall.
(10) Oil vent pipe, at the double acting valve on the firewall.
(11) Coolant vent pipe, at the engine end rib.
(12) Fire extinguisher hoses, at the port side of the carburettor (one narrow white, one narrow red band).
(13) Coolant duct, at the air compressor, and the compressor delivery hose at the auxiliary bulkhead (port power plant only).
(14) Suction and pressure pipes from the vacuum pump, at the auxiliary bulkhead (one narrow white, one narrow black, except the starboard pressure pipe which has one narrow red, one narrow yellow).
(15) Supercharger ram air pressure hose, at the firewall (one broad yellow band).
(16) De-aerator vent pipe, at the firewall, and the priming hose, in rear of the auxiliary bulkhead.
(17) Hydraulic pressure and suction pipes, at the auxiliary bulkhead (one broad white band).
(18) Boost gauge pipe, at the auxiliary bulkhead (one narrow blue, one broad red, one narrow blue band).
(19) Throttle connecting rod and propeller control, at the torque tube levers.
(20) Slow-running cut-out control, at the engine lever ; unclip the conduit from the engine mounting and at the firewall.
(21) Vent pipe from the supercharger casing, near the left-hand engine mounting connection.
(22) Electrical and ignition leads at the plugs on the auxiliary bulkhead. The leads at the flame switches on the firewall and the supercharger gear change test switch.
(23) Generator cable, at the suppressor on the engine end rib.
(24) Oil supply hose to the oil pump, at the firewall.
(25) Oil supply hose to the feathering pump, at the firewall.
(26) Fuel supply hose to the pump, at the firewall.
(27) All bonding wires and tags.
(28) Stay tube from the front spar, at the auxiliary bulkhead.
(29) Check that all the disconnections between the power plant and the airframe have been made, take the weight of the power plant on the gantry. Remove the four engine mounting attachment bolts from the fittings at the spar and the undercarriage top structure (*fig.* 21), using extractor tool, Stores Ref. 26BY/5052. Raise the power plant, turn the front towards the radiator and lower on to the power plant stand.

ASSEMBLY

1. The engines and their mountings are assembled as a unit. The procedure for installation is in the reverse order to that given for the removal. The rigging of the engine controls is given in Sect. 4. Chap. 3. It should be noted that the copper and asbestos gaskets are fitted between the engine and the exhaust trough only (*fig.* 10), and to ensure that the securing nuts do not work loose, adopt the following procedure. For the first engine run tighten the manifold nuts but do not lock ; after the run and when the engine has cooled, further tighten the nuts and lock.

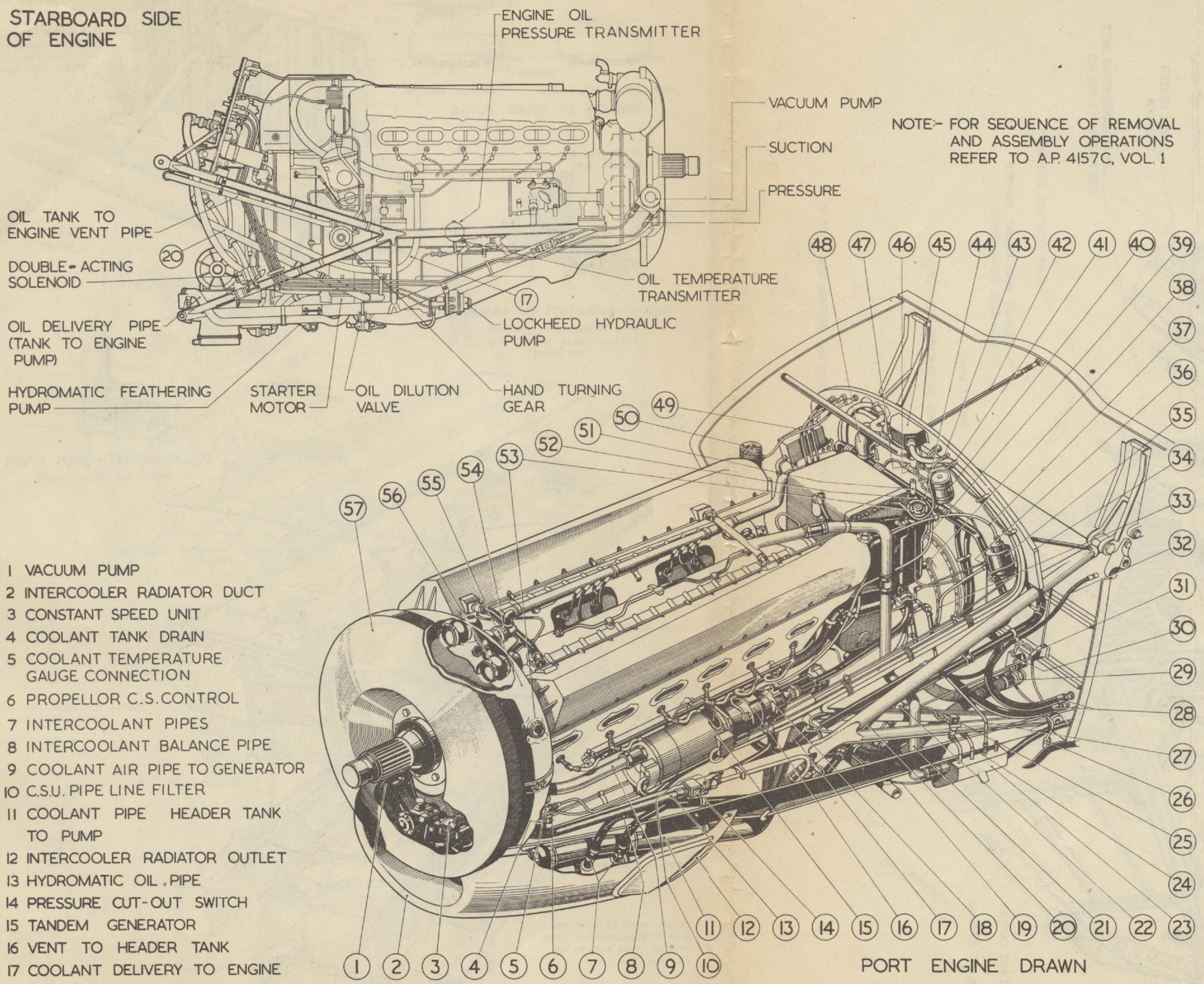

1 VACUUM PUMP
2 INTERCOOLER RADIATOR DUCT
3 CONSTANT SPEED UNIT
4 COOLANT TANK DRAIN
5 COOLANT TEMPERATURE GAUGE CONNECTION
6 PROPELLOR C.S. CONTROL
7 INTERCOOLANT PIPES
8 INTERCOOLANT BALANCE PIPE
9 COOLANT AIR PIPE TO GENERATOR
10 C.S.U. PIPE LINE FILTER
11 COOLANT PIPE HEADER TANK TO PUMP
12 INTERCOOLER RADIATOR OUTLET
13 HYDROMATIC OIL PIPE
14 PRESSURE CUT-OUT SWITCH
15 TANDEM GENERATOR
16 VENT TO HEADER TANK
17 COOLANT DELIVERY TO ENGINE
18 INTERCOOLANT PUMP
19 DRAIN FROM HYDRAULIC PUMP
20 COOLANT RETURN TO RADIATOR
21 CAM COVER BREATHER
22 SUPERCHARGER RAM
23 ACCESSORIES DRAIN TANK
24 DRAIN FROM FUEL PUMP
25 TERMINAL BLOCK
26 PNEUMATIC RAM TEST PUSH-SWITCH
27 DRAIN FROM BLOWER CASING
28 FIRE EXTINGUISHER HOSES
29 FUEL PIPE TO PUMP
30 FLAME SWITCH
31 IDLE CUT-OFF CONTROL
32 DE-AERATOR VENT PIPE
33 COMPRESSED AIR PIPE TO SUPERCHARGER RAM
34 AUXILIARY BULKHEAD
35 R.P.M. GENERATOR
36 THROTTLE CONTROL PICK-UP
37 TACHOMETER DRIVE
38 INTERCOOLANT CONNECTION TO SUPERCHARGER CASING
39 INTERCOOLANT HEADER TANK
40 BOOSTER COIL
41 ELECTRIC SERVICES LOOMS
42 STAY TUBE
43 VENT FROM COOLING SYSTEM
44 VENT FROM INTERCOOLANT PUMP
45 ELECTRIC JUNCTION BOX 'E'
46 IGNITION CABLES SOCKET
47 SPARK GAP ISOLATOR
48 BREECHES CONNECTION FOR COOLANT DELIVERY PIPES
49 OIL SEPARATOR BOX (VACUUM SYSTEM)
50 HYMATIC AIR COMPRESSOR
51 INTERCOOLANT HEADER TANK VENT
52 INTERCOOLANT RELIEF VALVE
53 FILLER CAPS
54 COOLANT RELIEF VALVE
55 COOLANT HEADER TANK
56 COOLANT OUTLETS
57 COWLING DISC

FIG. 11 POWER PLANT

G2306 M28541 10/49 550 C.B.& S.LTD. G.P.55.

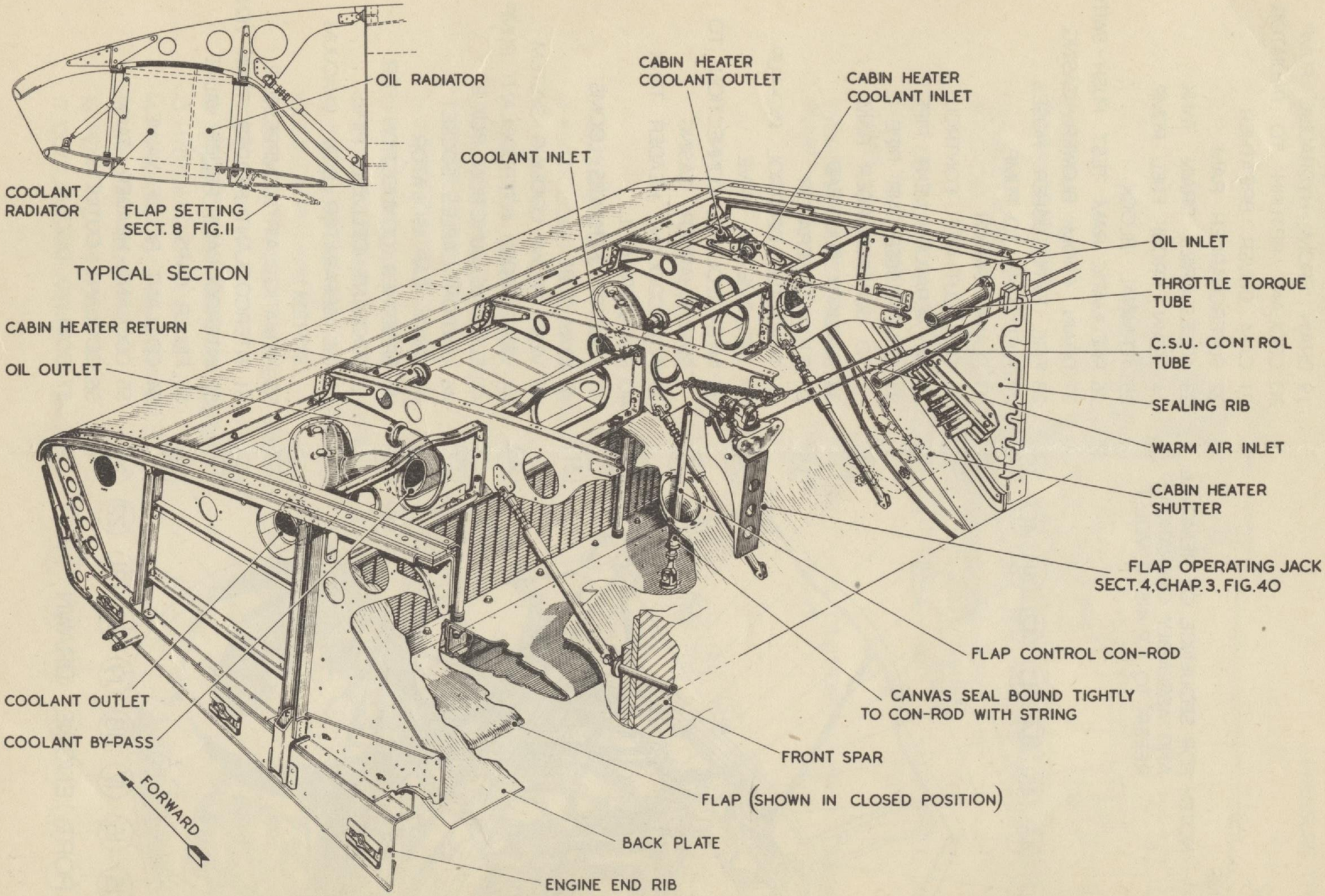

FIG. 12 RADIATOR INSTALLATION

NOTE:- FOR ENGINE COOLING SYSTEM SEE SECT. 8

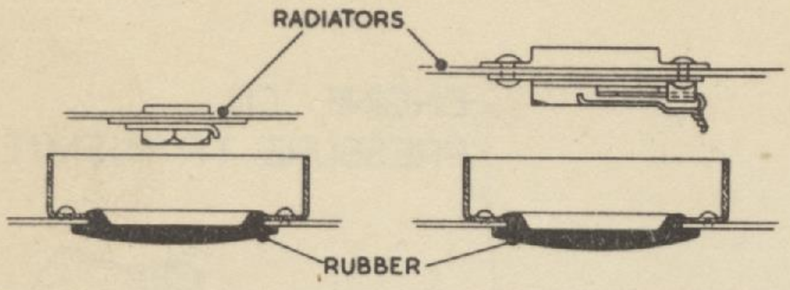

CABIN HEATER & OIL COOLER

COOLANT RADIATOR

SECTION OF DRAIN PLUGS

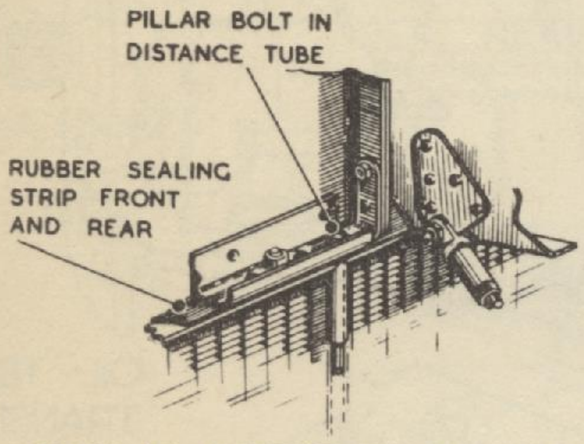

VIEW IN DIRECTION OF ARROW B

WITH RADIATORS IN POSITION SHOWING REAR PILLAR BOLT TOP FIXING

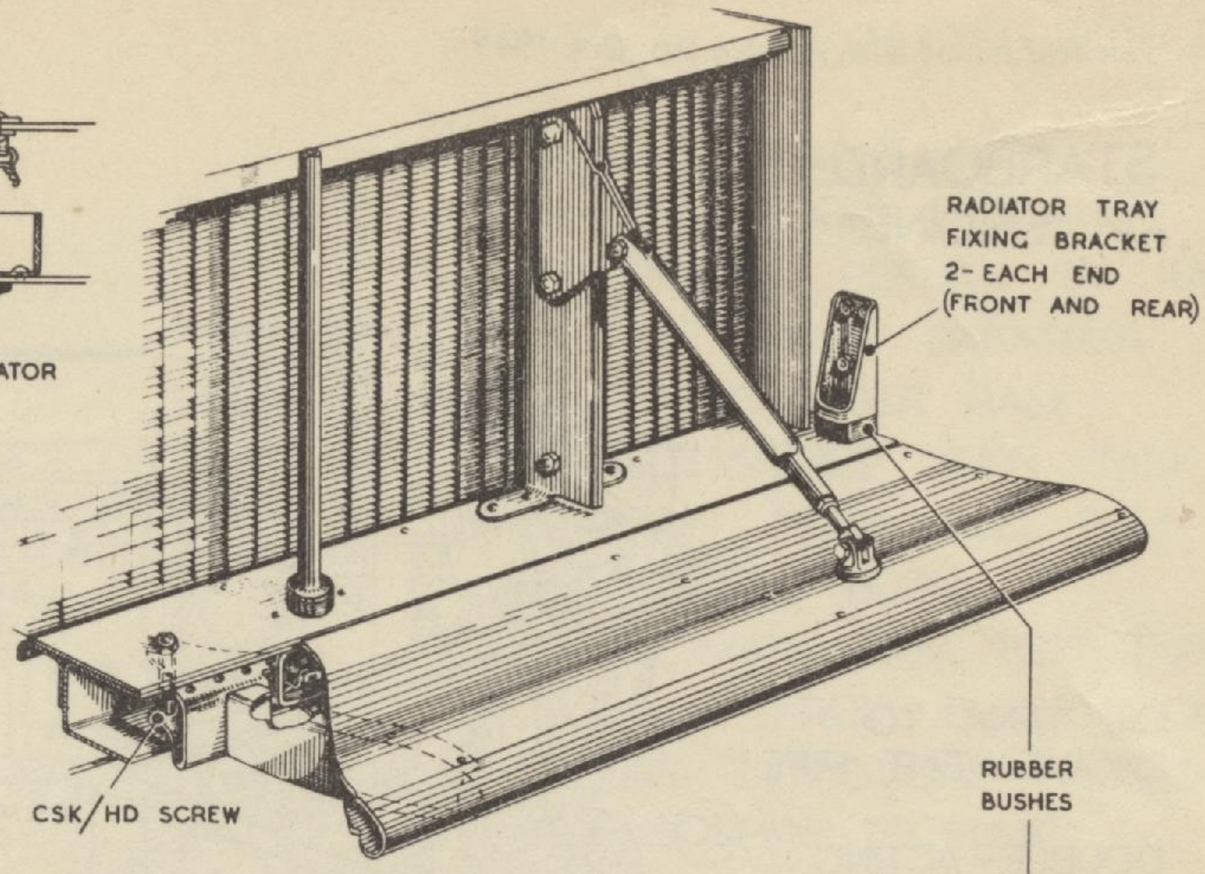

VIEW IN DIRECTION OF ARROW A

WITH RADIATOR IN POSITION

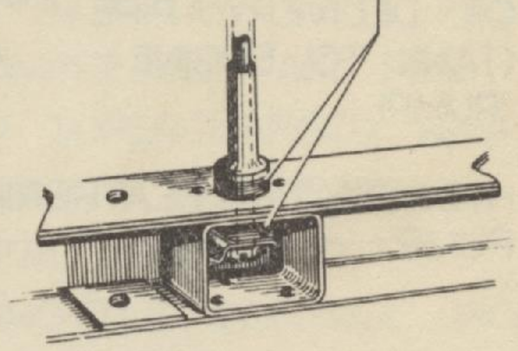

PILLAR BOLTS LOWER FIXING

FRONT AND REAR SIMILAR

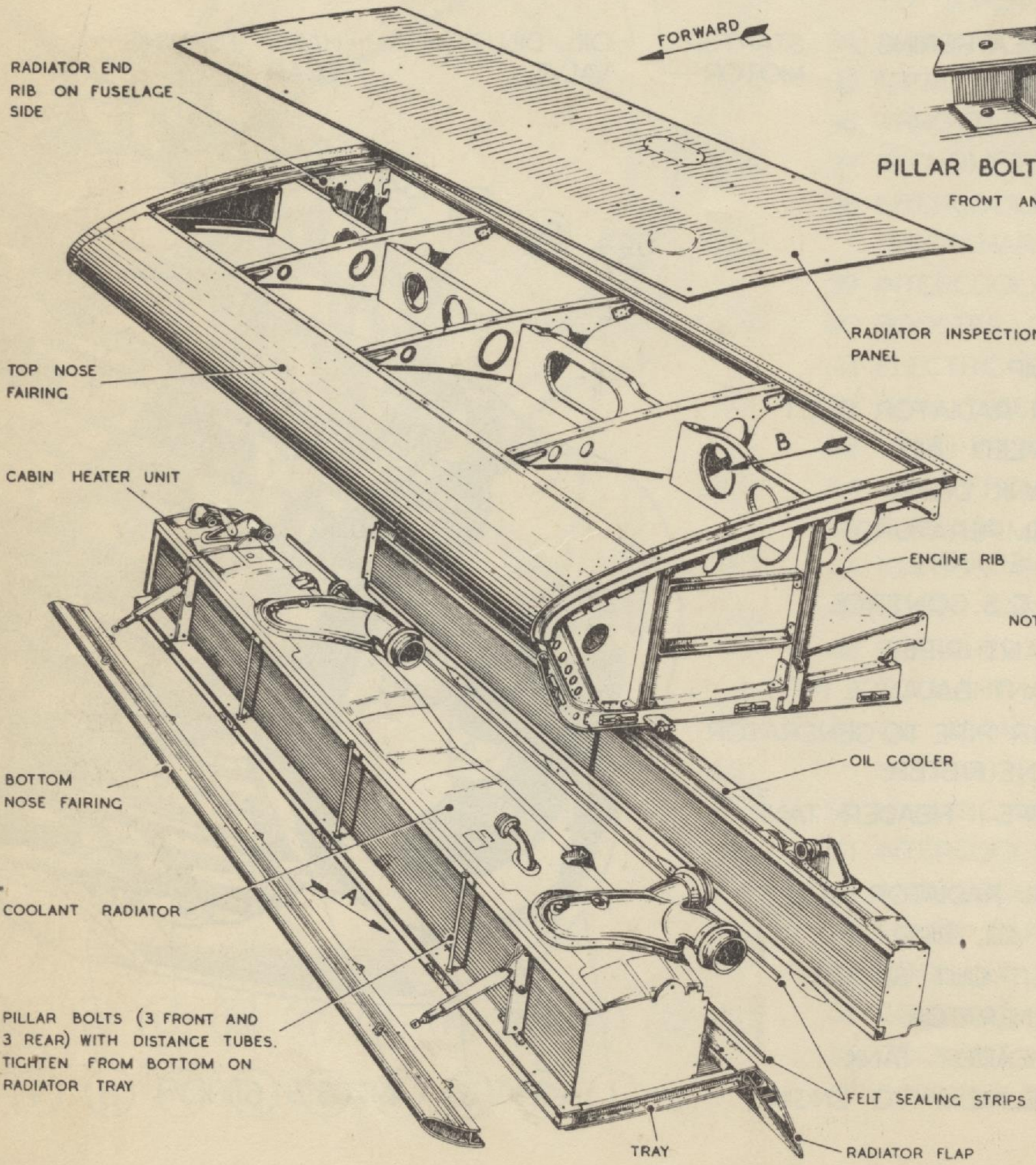

NOTE :- FOR ENGINE COOLING SYSTEM SEE SECT. 8

FIG. 13 DISMANTLING AND ASSEMBLY OF RADIATORS

RADIATOR BLOCK REMOVAL AND ASSEMBLY (FIG. 12 and 13)

Removal

(1) Before removing the coolant radiator or the oil cooler, drain the former when cool and the latter while hot (*Sect.* 4, *Chap.* 2), then proceed as follows :—

(2) Remove the radiator inspection panel on the wing upper surface.

(3) Disconnect all pipes—oil, coolant and vent — at the joints nearest the radiators. Blank off the pipe ends and the radiator connections.

(4) Disconnect the radiator flap from its operating rod by removing the attachment bolt from the eye-bolt.

(5) Detach the end fairing plates forward of the coolant radiator, secured by 2 B.A. screws.

(6) Remove the bottom nose fairing by unscrewing the five screws securing it to the radiator tray ; disconnect the tubular stays at the radiator.

(7) Attach a sling with a spreader bar to a lug at each end of the coolant radiator and, with a block and tackle, take the weight of the radiator block.

(8) Remove the nuts from the bolts at the four corner brackets, front and rear, securing the radiator block to the fuselage and engine end ribs and extract the bolts.

(9) Remove the nuts, plates and rubber washers from the bottom of the pillar bolts, front and rear.

(10) Lower the radiator block slightly and with a thin steel strip, carefully break the Bostik seal between the radiator block and the rubber strips on the radiator mounting.

(11) When the sealing joints have been separated, lower the radiator block to within about three feet of the ground, removing the rubber bushes and the distance tubes as the block leaves the pillar bolts. The block must be steadied while lowering to prevent damage between the radiator block and the pillar bolts.

(12) Separate the radiator block and the tray by removing the bolts holding them together. Lower the radiator block on to supporting trestles.

(13) The oil cooler and the cabin heater section of the radiator can be separated from the coolant radiator. The oil cooler must be removed first, the securing bolts being fitted along the top, bottom and end joint flanges. When the oil cooler has been separated the rear joint bolts between the coolant radiator and the heater section are accessible for removal.

Note . . .

When handling the radiators, great care is essential to avoid damage, particularly to the matrix. It is recommended that plywood cover plates be temporarily fitted against the matrix during any removal or assembly operations. The radiator block weighs approximately 230 *lb.*

Assembly

1. When assembling a new coolant radiator, the bottom front flange will have to be drilled to pick up the existing holes in the radiator tray. Bolt the new radiator to the original heater and oil cooler sections with the sealing strips between each joint. Bolt the heater and oil cooler sections to the radiator tray, and from the tray mark off the coolant radiator bottom flange through the bolt holes. If a new heater or oil cooler section has to be fitted the procedure is similar. Remove the tray and drill the flanges ; it is recommended that a No. 9 drill be used, as this will give a slight latitude for the 2 B.A. bolts. Should a new tray be fitted, the position of the four corner bolt holes must be determined by direct measurement, using the old tray for reference. Using these holes, bolt the radiator block to the tray, transfer the marking from the existing bolt holes, remove the tray and drill the holes. Clean off all the dried Bostik adhering to the sections or rubber sealing strips and apply a fresh coat of Bostik. Raise the radiator block into the wing, guiding it on to the pillar bolts with the distance tubes and rubber bushes in place. Screw on the pillar bolt nuts, together with the rubber and metal washers, until the radiator block is pulled into position. Insert and tighten the bolts holding the tray to the engine and radiator end ribs. Replace the remaining items removed during the dismantling operation. Fill the coolant system and test as described in Sect. 4, Chap. 3. The setting of the radiator flaps is described and illustrated in Sect. 4, Chap. 3.

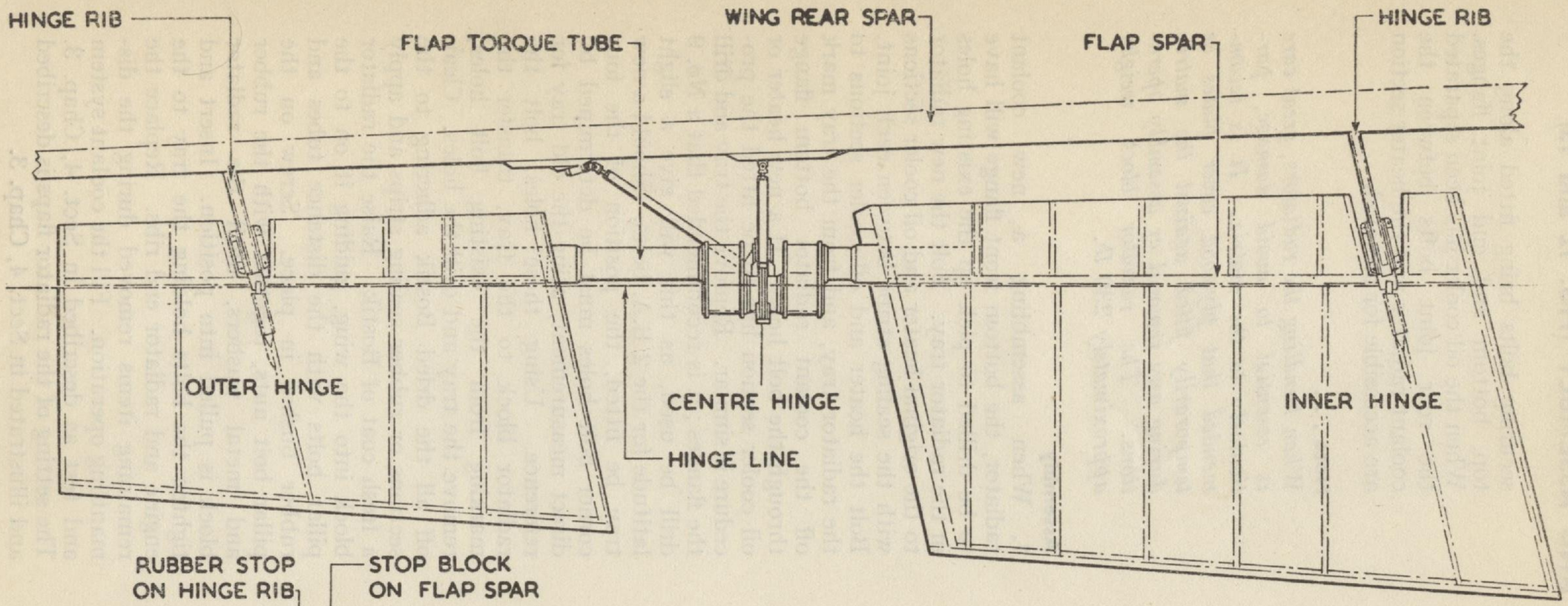

Fig. 14. Flap hinge joints

WING FLAPS REMOVAL AND ASSEMBLY (FIG. 14 and 15)

Removal

(1) Set the flap selector DOWN and, using the hand pump, lower the flaps.

(2) Remove the inspection panel on the top of the engine nacelle rear fairing.

(3) Remove the bolt attaching the jack to the flap.

(4) Uncouple and seal the hydraulic pipes to the jack, and remove the jack by extracting the securing bolt at the spar fitting.

(5) Disconnect the flap position indicator transmitter connecting rod (starboard flap only).

(6) Disconnect all hinge bonding.

(7) Remove the flap centre hinge bolt, taking care to retain the distance collars with their felt washers.

(8) Support the weight of the flap an remove the inboard and outboard hinge pins. To facilitate withdrawal of the flaps, raise the outer end to clear the engine nacelle fairing.

Assembly

1. Reverse the above instructions and adjust the jack ram length, if required, by slackening the lock-nut and screwing the eye-end in or out as necessary. Adjust the rubber " up " stops by means of shims, so that all stops are compressed 0·1 in. with the flaps fully up. Check that there is $0 \cdot 375 \pm 0 \cdot 15$ in. clearance between the flaps and the fuselage, and $0 \cdot 45 \pm 0 \cdot 2$ in. clearance between the flap and the aileron, also ensure that the leading edge of the flap is making contact with the rubber sealing strip attached to the bottom edge of the flap shroud. With the flaps fully up the position indicator in the cockpit should read zero, and 45 deg. when the flaps are fully down. If the indicator does not register correctly, adjust the transmitter linkage to the starboard flap.

Note . . .

The centre bearing is located axially by distance collars, lateral adjustment being by means of an adjustable strut. Fore-and-aft, and lateral adjustment of the inboard and outboard hinges is obtained at the serrated fittings. Vertical adjustment is by shims under the same fittings.

This leaf issued with A.L. No. 20, October, 1949

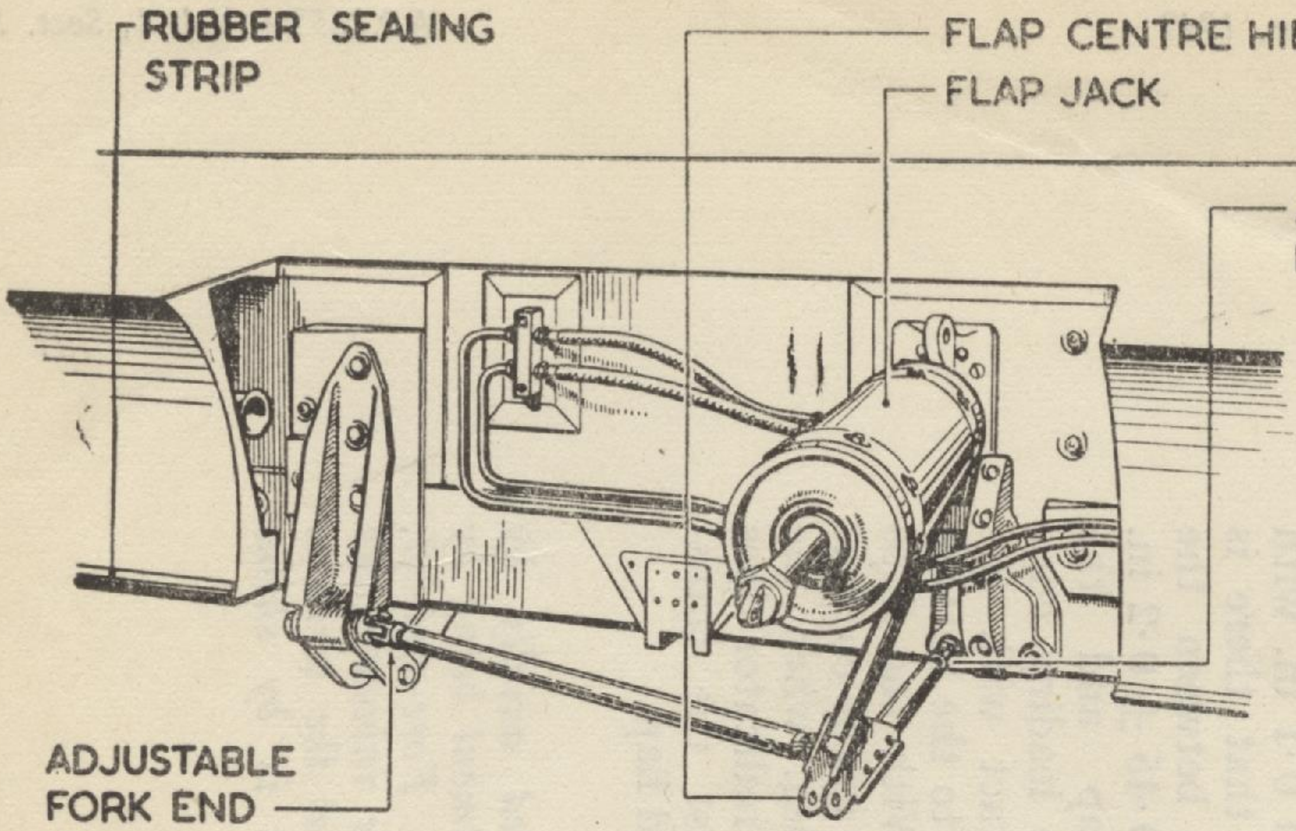

VIEW ON REAR SPAR OF WING SHOWING FLAP CENTRE HINGE ATTACHMENT

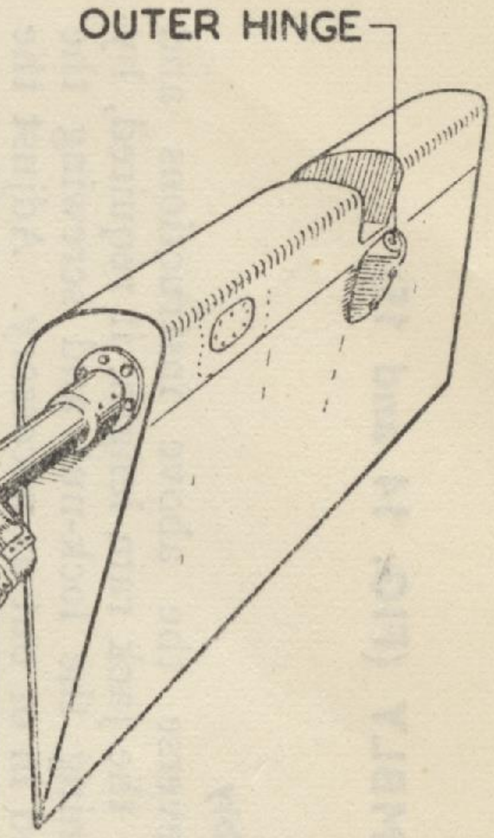

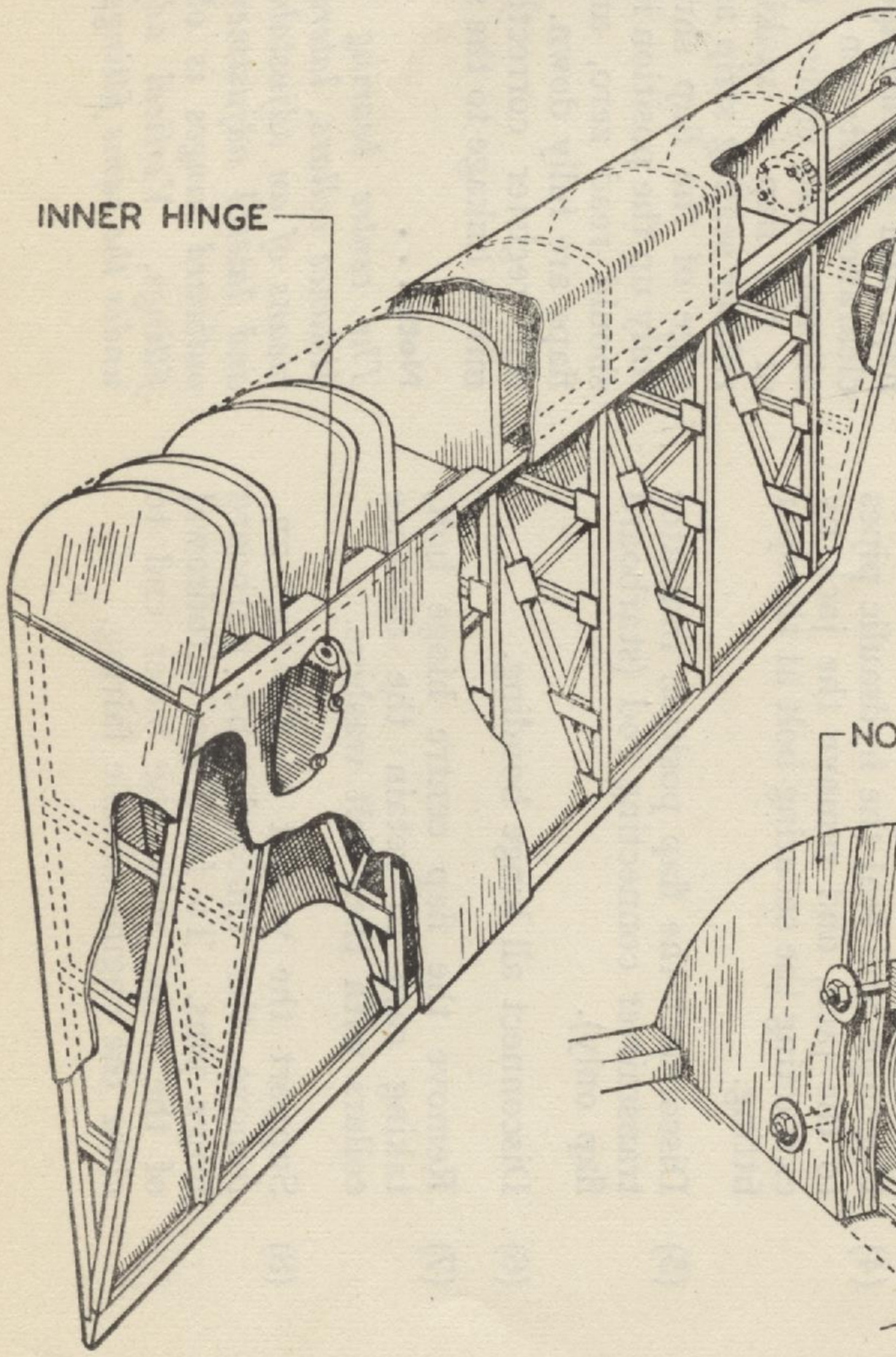

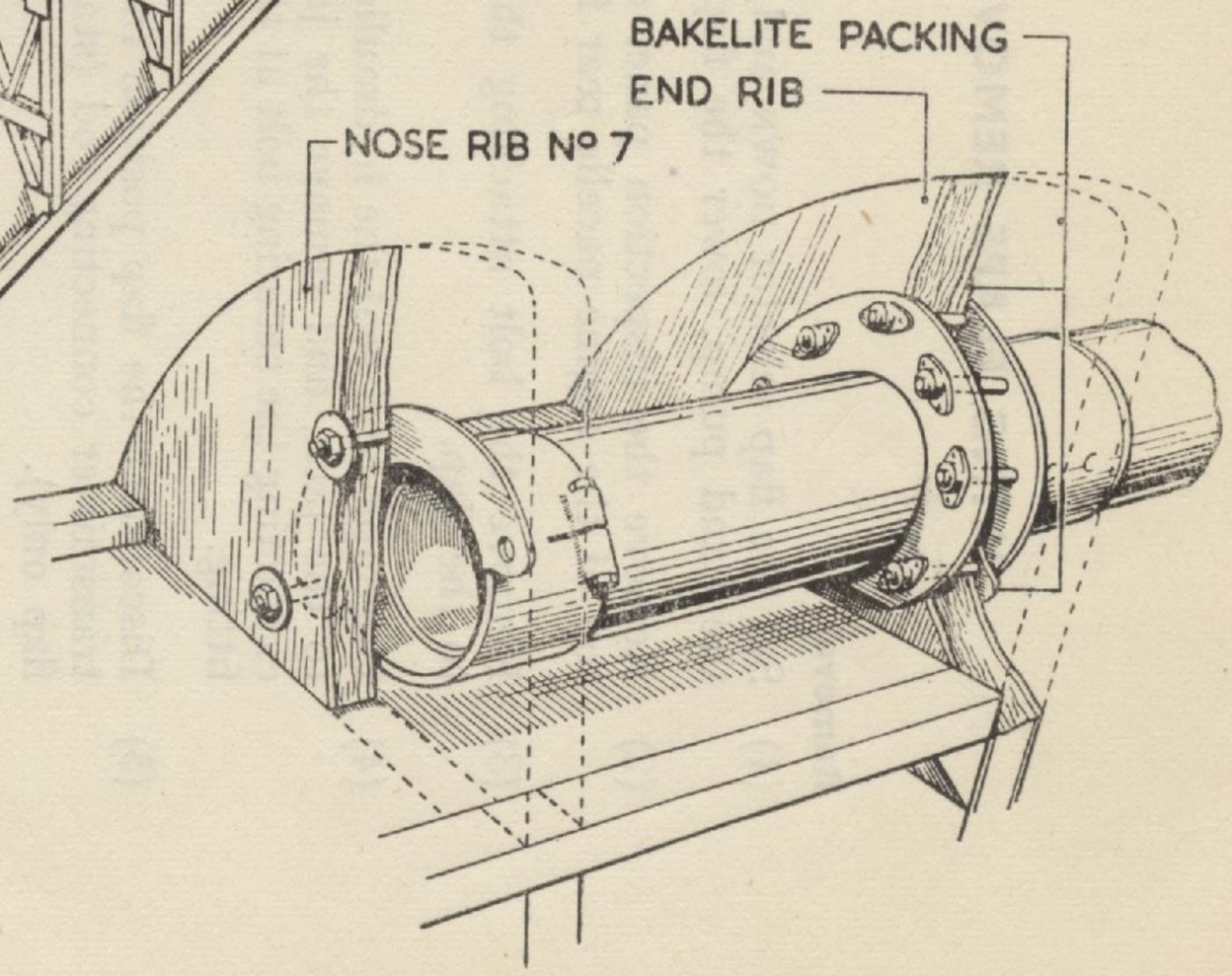

VIEW SHOWING TORQUE TUBE ATTACHMENT BRACKETS

Fig. 15. Flap details

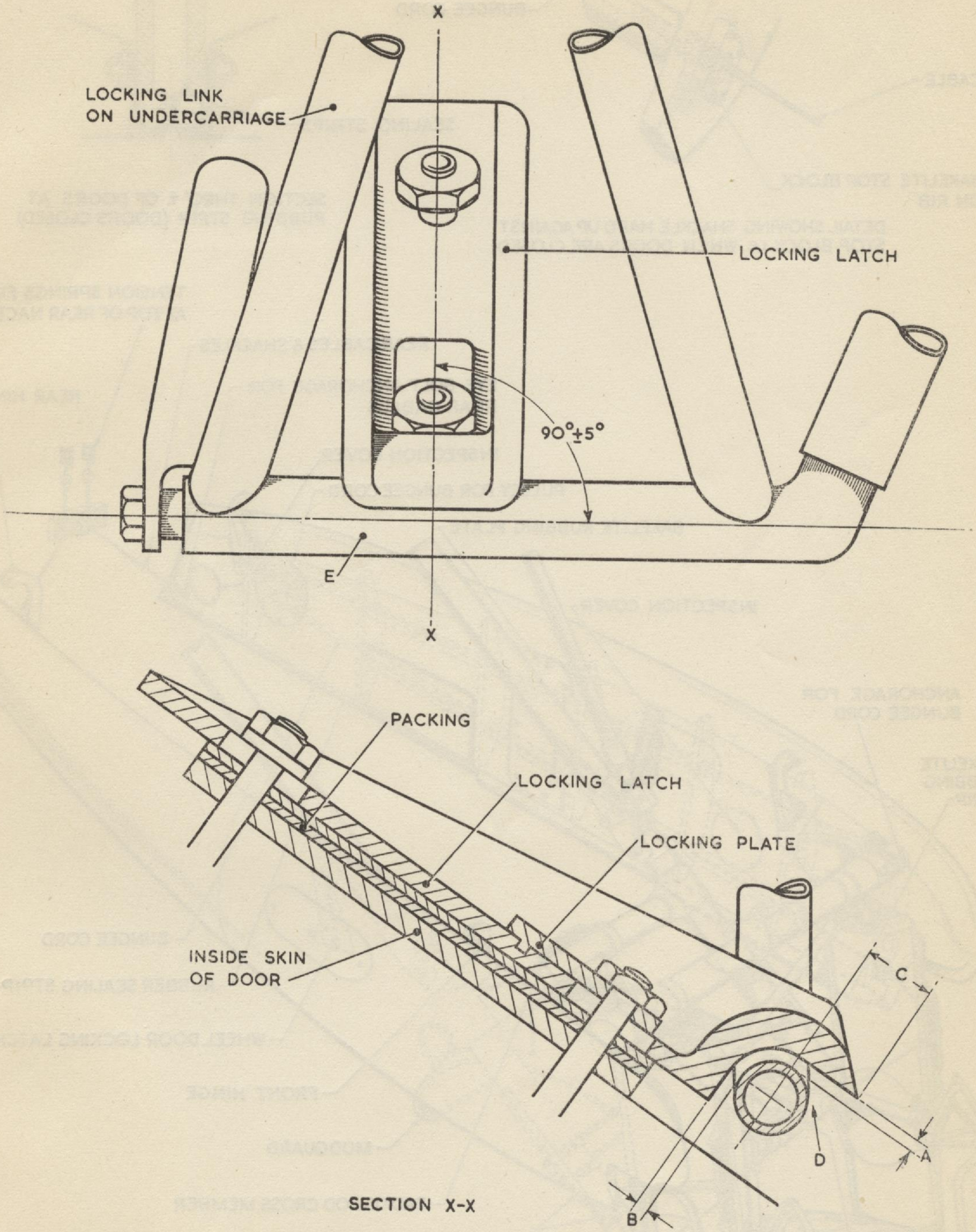

SECTION X-X

1. After assembling the undercarriage doors, adjustments must be made to the door locking latches to obtain the clearances listed below :—

A $\frac{1}{16}$ in. $\pm \frac{0{\cdot}125}{0{\cdot}00}$ when the undercarriage is retracted in the maximum override position. Adjust with packing under the locking latch.

B 0·125 in. min.

C 0·4 in. min.

D 0·15 in. min. clearance as the tube enters the locking latch.

E Tube to be parallel to the inside of the door within ± 5 deg. Adjust at the fender and locking link.

2. Finally adjust one door at a time in accordance with fig. 17, para. 1.

Fig. 16. Wheel door "up" lock

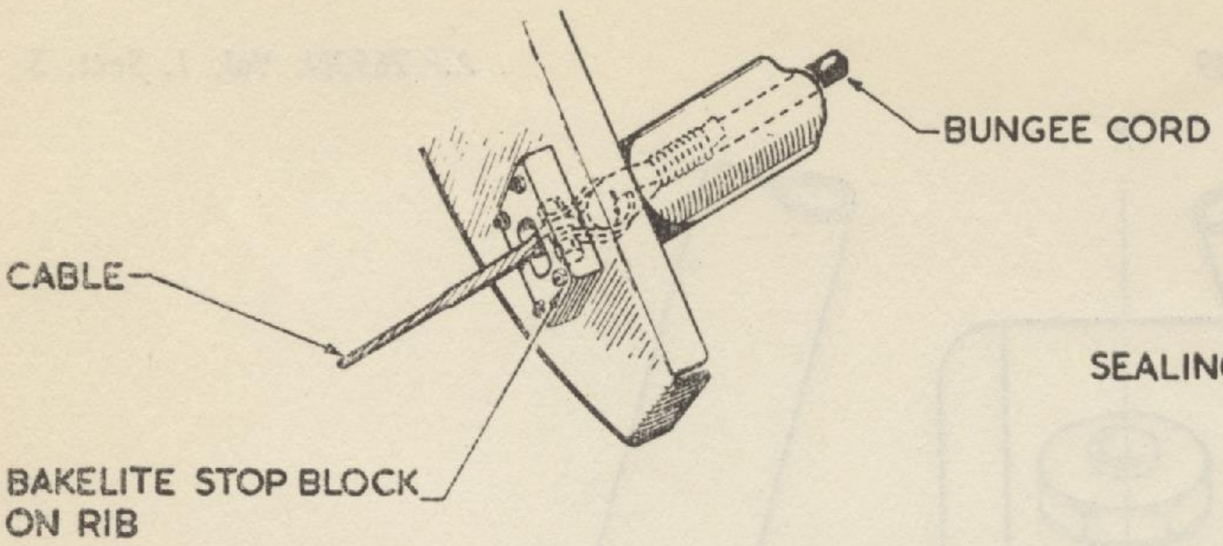

DETAIL SHOWING SHACKLE HARD UP AGAINST STOP BLOCK i.e. WHEN DOORS ARE CLOSED

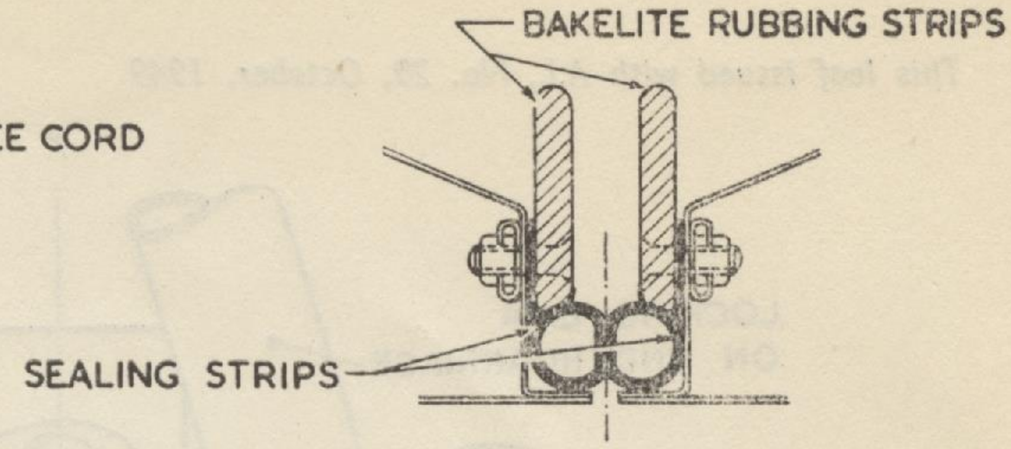

SECTION THRO' ℄ OF DOORS AT RUBBING STRIP (DOORS CLOSED)

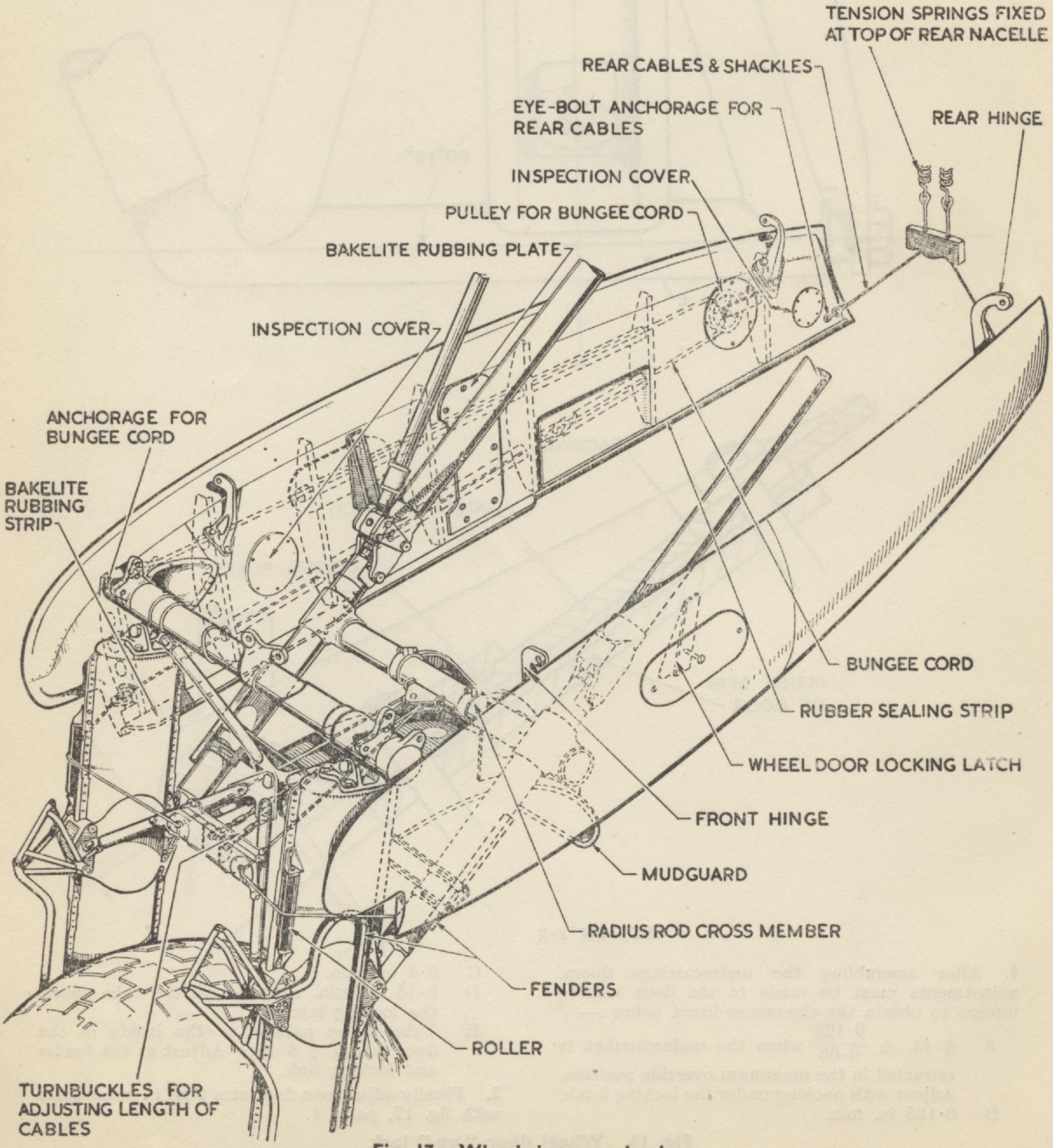

Fig. 17. Wheel door mechanism

WHEEL DOORS REMOVAL AND ASSEMBLY (FIG. 17)

Removal

(1) Disconnect the shackle bolts from the spring-loaded cables at the eye-bolts on the rear end of the doors.

(2) Disconnect the turnbuckles at the undercarriage leg cross bracing; dismantle the pulleys on the radius rod cross member to enable the cables to be drawn into the wheel doors.

(3) Detach the hinge pins from the hinge brackets on the nacelle fairing and remove the doors.

Assembly

1. When assembling the doors, it is important that the front cables should be assembled as illustrated. When the doors are fully closed, the bolts attaching the bungees to the cables should bear against the bakelite stop blocks bolted to the door end ribs, to ensure that the doors are held positively closed by the tension of the cables only. The tension of the door cables should be tested as shown in fig. 18. The hook plate can be made from 14 s.w.g. mild steel approximately 6 in. long by 4 in. wide. The undercarriage should be retracted with the weight hung on one door and, just prior to the doors closing, the weight should be eased to prevent jarring of the structure when the override is released. Then, with the weight hanging, the door must open 0·06 in. but not more than 0·15 in., measured against the bottom of the firewall. If under 0·06 in. or over 0·15 in.,

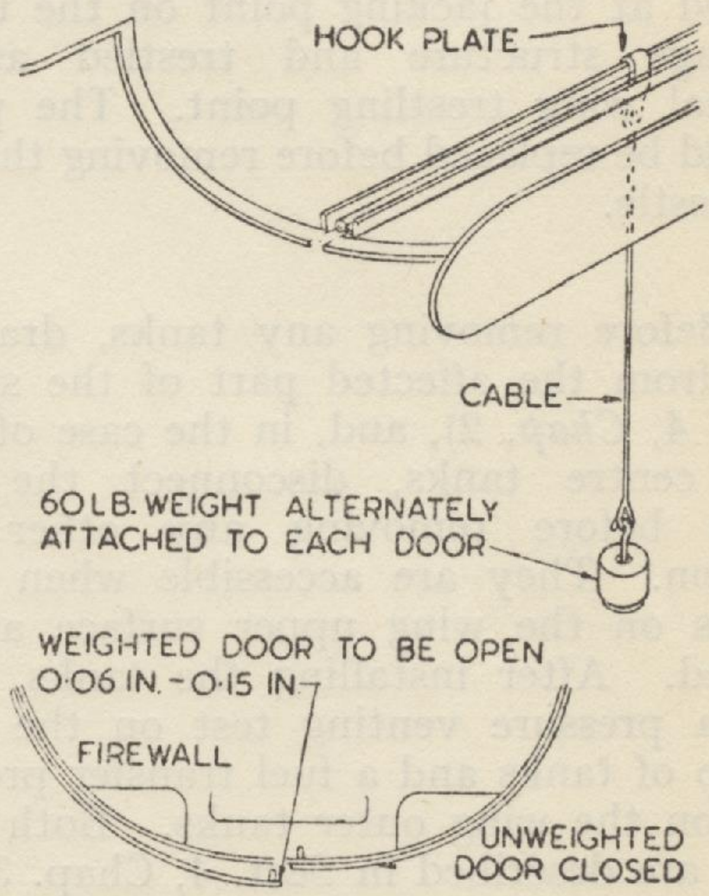

Fig. 18. Testing wheel door cables

the door cable tension should be adjusted by the turnbuckles until the correct gap is obtained. At the same time, the door up lock catches which engage with an extension of the undercarriage fenders should be checked for clearance (*fig.* 16). This can be done by smearing the lock catches with a suitable compound and noting any sign of the compound on the fender extension when the undercarriage is lowered. A visual check on the locking can be obtained when the engine bottom cowling and the inspection panel at the bottom of the firewall are removed.

REMOVAL OF FUEL TANKS (FIG. 19 and 20)

General instructions

1. Access for the removal of the centre and fuselage tanks is through the bomb bay doors, and to the wing tanks through panels in the underside of the wing. The wing tank panels form part of the stressed skin, and, therefore, it is essential that before removing any of them, the wing is supported at the jacking point on the undercarriage structure and trestled at the normal wing trestling point. The panels should be replaced before removing the jack or trestle.

2. Before removing any tanks, drain all fuel from the affected part of the system (*Sect.* 4, *Chap.* 2), and, in the case of wing and centre tanks, disconnect the vent pipes before removing any other connection. They are accessible when cover plates on the wing upper surface are removed. After installing the tanks, carry out a pressure venting test on the inner group of tanks and a fuel transfer pressure test on the wing outer tanks. Both these tests are described in Sect. 4, Chap. 3.

Notes . . .

(1) *Whenever a fuel hose or adapter is removed from, or fitted to a tank, it is essential that the tank adapter or the hose adapter be held firmly by spanner, Stores Ref.* 26BY/5056, *while the disconnection or connection is made. This will prevent the tank plating being distorted or the welded joints fractured.*

(2) *As the tank panels are part of the stressed structure, when fitting a replacement, it may be necessary to trim the panel edges to obtain a good fit. Care must be taken to remove as little of the material as possible, in order that the maximum amount is retained between the edges of the panel and the screw holes.*

Fuselage tanks

3. The installation of these tanks is described in Sect. 4, Chap. 2; to remove the tanks, reverse the installation instructions.

Removal of centre tanks (*fig. 19*)

4. (1) Disconnect all electrical cables from the bomb release and fuzing units. Remove the front and rear bomb carrier support frames and any bomb carriers attached, by withdrawing the quick-release pins from the support frames at the centre rib and No. 1 wing ribs.

(2) Remove the front and rear bracing arches. These are secured by nuts at the centre rib and by bolts at ribs No. 1 and at bomb door hinges No. 2 and 3.

(3) Disconnect the rear bomb steady bar adjusting wheel anchorage and allow the steady bars and adjusters to hang from the centre rib support bracket.

(4) Disconnect and remove the fuel hoses from the port inner wing tank to the fuel gallery. There is a joint at the wing centre rib.

(5) Disconnect the tank filler connection if the port tank is to be removed. The bonding is disconnected at this point and a pressure sealing rubber sleeve may also have to be removed.

(6) Disconnect the balance hoses between the two tanks and the vent connection at the rear end of the starboard tank.

(7) Disconnect the electrical leads at the fuel contents gauge tank unit and remove the fuel hose coupling the starboard tank to the fuel gallery.

(8) Uncouple the tank securing straps of each tank in turn and lower the tank. The clearance for removal is very small and some manipulation of the tanks will be necessary, therefore, care must be exercised to avoid damage to the tanks and their covering.

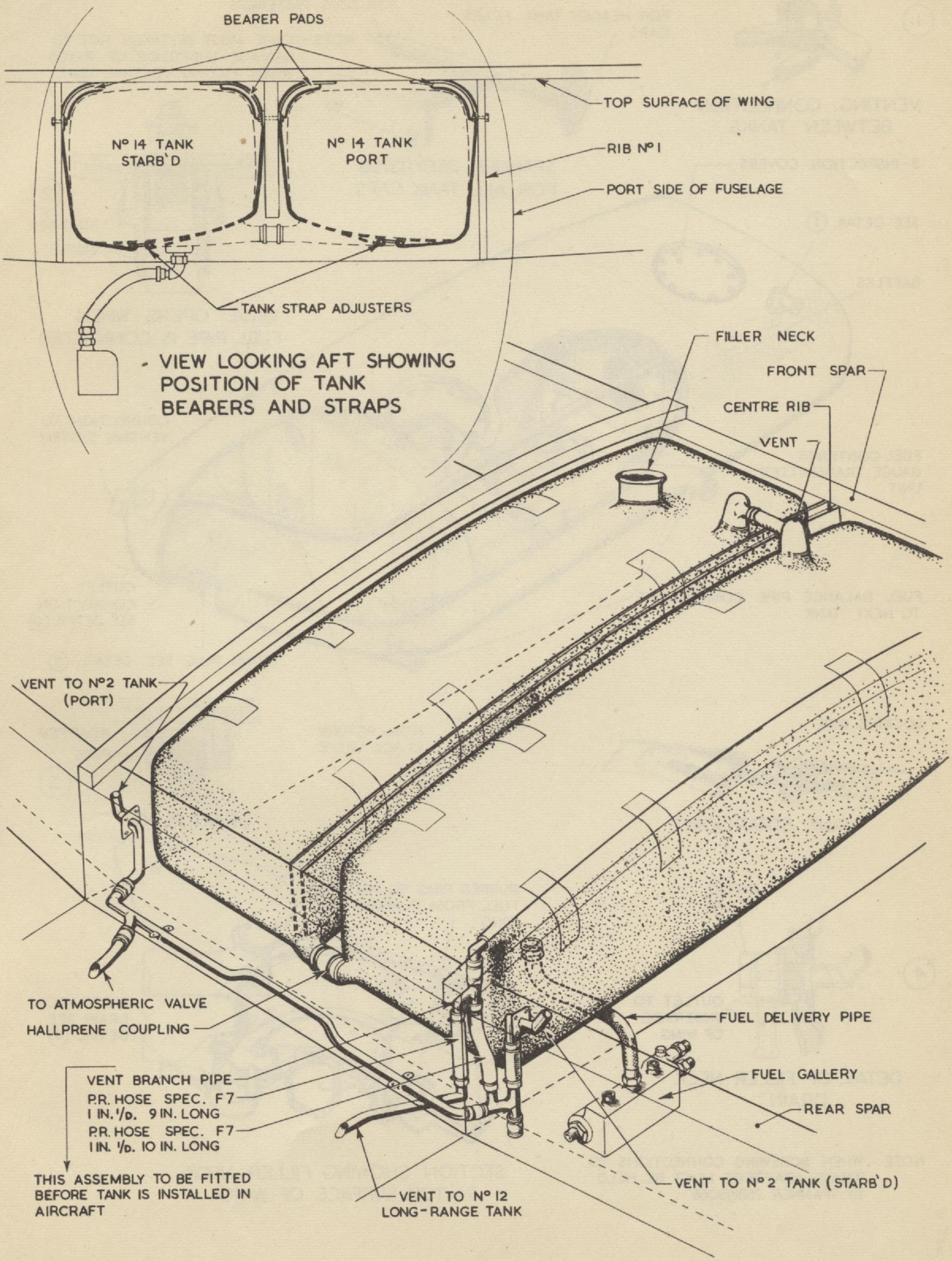

FIG. 19 CENTRE FUEL TANKS

G2306 M28541 10/49 550 C.B.& S.LTD. GP.55.

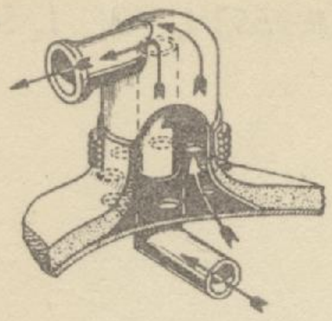

VENTING CONNECTION BETWEEN TANKS

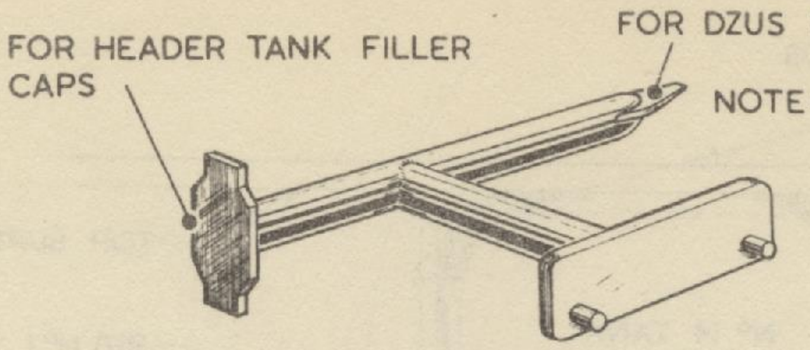

SPANNER 26BY/13795 FOR ALL TANK CAPS

NOTE:- CARE MUST BE TAKEN NOT TO DAMAGE UNDERSIDE OF WINGS WHEN FILLING VENTRAL TANK

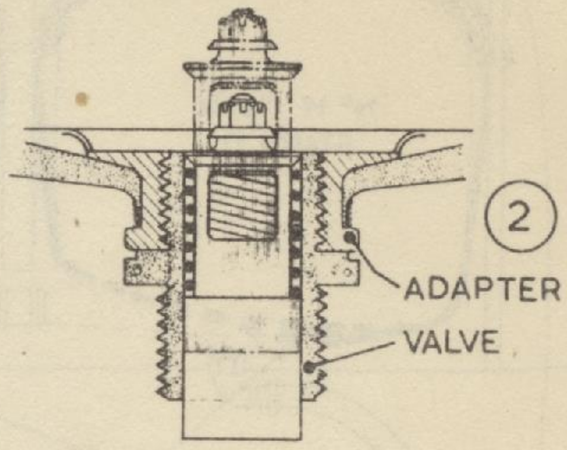

VALVE OPENS WHEN FUEL PIPE IS CONNECTED

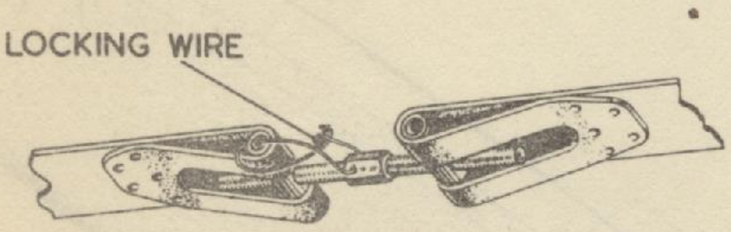

TANK STRAP JOINT

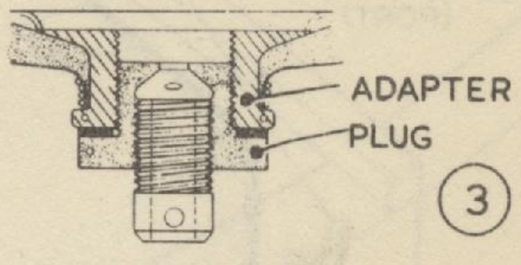

DRAIN PLUG

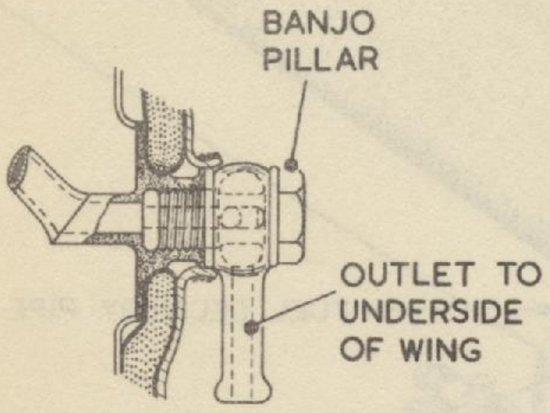

DETAIL OF FILLER NECK DRAIN

NOTE:- WHEN SCREWING CONNECTIONS TO TANKS, ADAPTERS MUST BE HELD BY SPANNER 26BY/5066

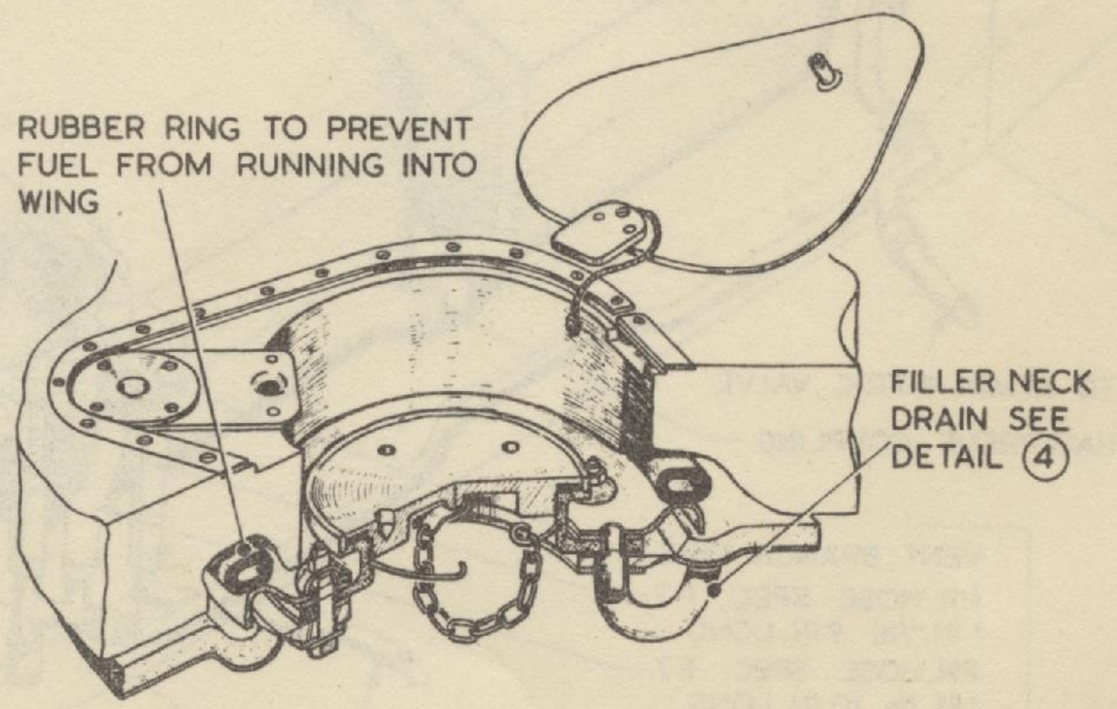

SECTION SHOWING FILLER NECK IN TOP SURFACE OF WING

FIG. 20 WING FUEL TANK — No. 2 PORT SIDE

REMOVAL OF FUEL TANKS (FIG. 19 and 20)—*Continued*

Removal of inner tanks (*fig. 20*)

5. (1) Remove the short fairing at the underwing to fuselage joint and disconnect the fuel outlet hose at No. 2 tank.

(2) Remove the oval shaped cover in the wing upper surface between tanks No. 2 and 3, and disconnect the vent pipe hose.

(3) Unscrew the tank bay panel screws and lower the panel.

(4) Disconnect the bonding tags, and the electrical cables from the fuel gauge tank unit.

(5) Disconnect the vent pipe at the rear inboard end of No. 2 tank, and the balance pipes front and rear, between No. 2 and 3 tanks.

(6) Uncouple the support straps and lower the tank.

(7) Blank off all openings.

(8) If No. 3 tank is to be removed, the procedure is similar but the only disconnections are: balance hoses front and rear, the vent hose at the top of the tank, and the bonding.

Removal of outer tanks

6. Removal of the outer tanks is similar to that for the inner tanks. A vapour vent pipe on the rear inboard end of No. 4 tank, and the vent pipe to atmosphere, also the fuel transfer pipe from the drop tank, both on No. 5 tank, must be disconnected.

Removal of wing drop tanks

7. If necessary drain the tanks from the drain plugs. Detach the panels on each side of the tanks at the rear end and disconnect the glass break tubes from the hoses at the rear spar. Then support both tanks and press the jettison switch in the cockpit; the tanks can then be lowered. Should it be necessary to remove only one of the tanks, instead of pressing the jettison switch, unscrew the nut securing the tank to the eye-bolt and allow the tank to be withdrawn clear of the eye-bolt.

Removal of fuel pipes

8. It is not necessary to drain the fuel tanks when the flexible hoses are removed, because shut-off valves are incorporated in the tank outlet connections, and as the hoses are unscrewed the spring-loaded shut-off valves close and seal the tank outlets. Thus, when removing fuel tank flexible hoses, always unscrew the tank end first and when replacing the hoses, connect to the tanks last. Non-return valves in the fuel gallery isolate each pair of tanks from the remaining part of the system.

UNDERCARRIAGE TOP STRUCTURE AND ENGINE MOUNTING PICK UP BRACKETS (FIG. 21)

Radius rod upper section

Note . . .

Individual radius rods cannot be removed as complete assemblies from the aircraft as the lower portions are riveted to the cross bracing member.

(1) With the aircraft jacked, detach the undercarriage door operating cables, front and rear, and remove the cable pulleys from the radius rod cross-tube.

(2) Remove the jack ram bolt at the knuckle joint latch bracket and tie the jack out of the way (right-hand radius rod only).

(3) Remove the knuckle joint bolt and the bolt at the top end of the radius rod. The top portion of the radius rod can now be removed. If both top portions are removed, the lower assembly must be supported.

(4) Remove the eye-bolt attaching the lower portion of each radius rod to the shock absorber legs and remove the lower radius rod assembly complete with the mudguard.

Shock absorber legs

Note . . .

There is no necessity to detach the doors if only the shock absorber legs are being removed.

(1) Jack the aircraft and disconnect the door operating cables, front and rear, remove the cable guides on the leg cross bracing structure and allow the cables to hang from the pulleys.

(2) Remove the wheel and axle (see below).

(3) Remove the bolts holding the cross bracing structure to the leg being removed, and the eye-bolt holding the radius rod to the leg.

(4) Disconnect the flexible brake line coupling at the junction block on the bottom member of the undercarriage top structure.

(5) Remove the attachment bolt at the top hinge and lower the leg.

Note . . .

For adjustment after assembly refer to Sect. 4, Chap. 3.

Wheel and axle

(1) Place the lifting jack at the position as shown in Sect. 4, Chap. 2.

(2) Disconnect the brake air pipelines at each side of the wheel hub.

(3) Remove the four bolts holding the axle caps to the shock absorber struts, and the axle caps.

(4) Operate the jack until the struts are clear of the axle. then push the wheel clear.

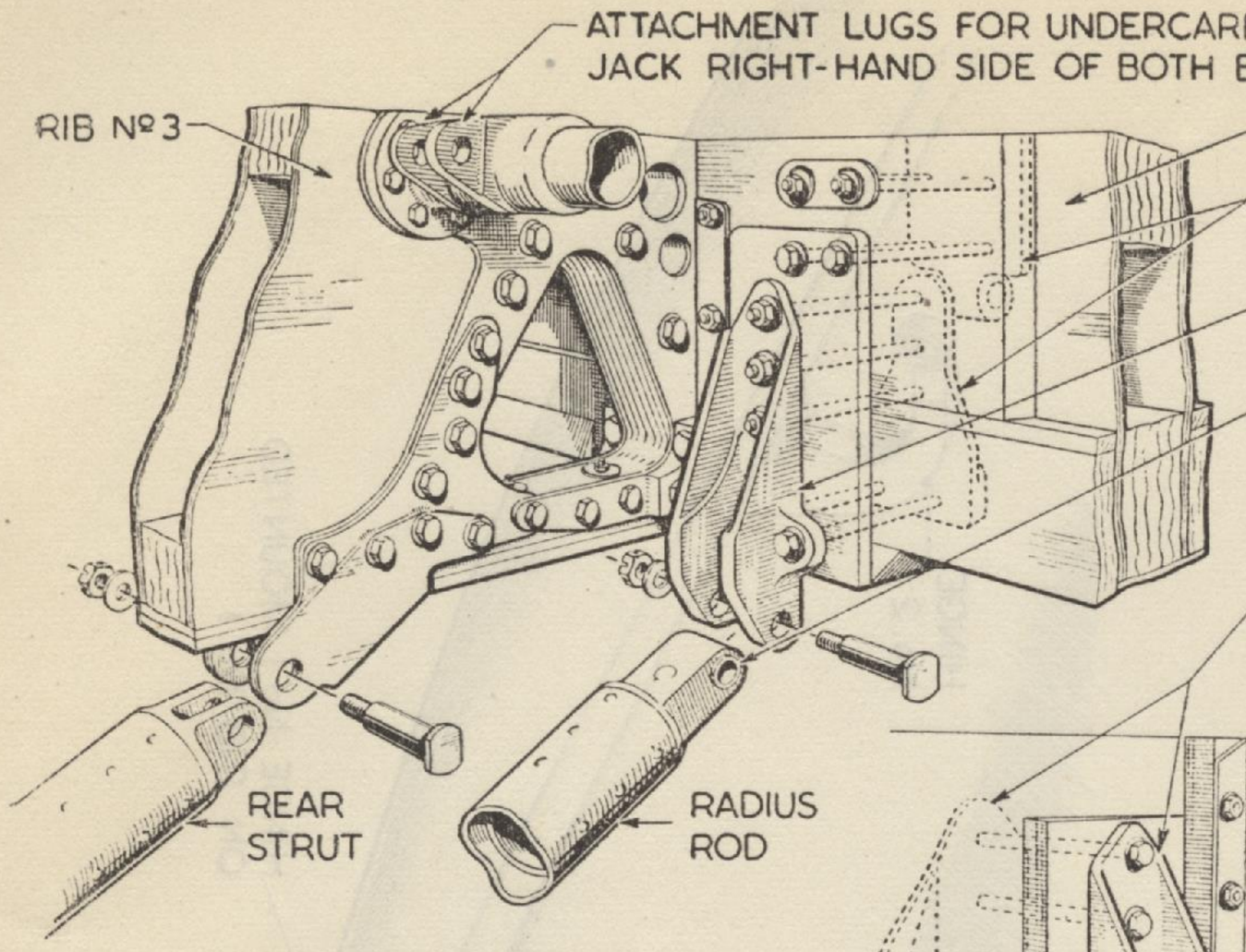

PORT INBOARD REAR ATTACHMENT BRACKETS

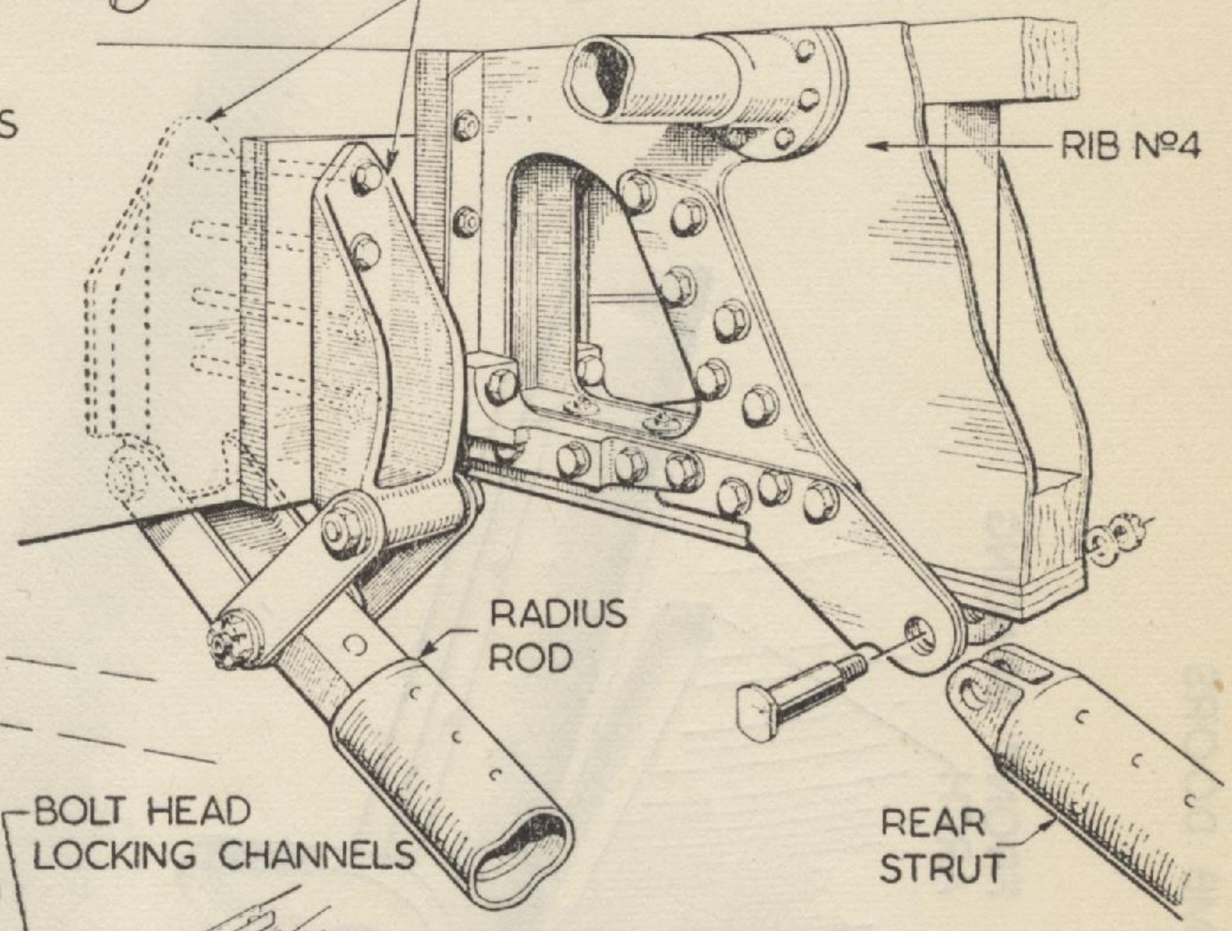

PORT OUTBOARD REAR ATTACHMENT BRACKETS

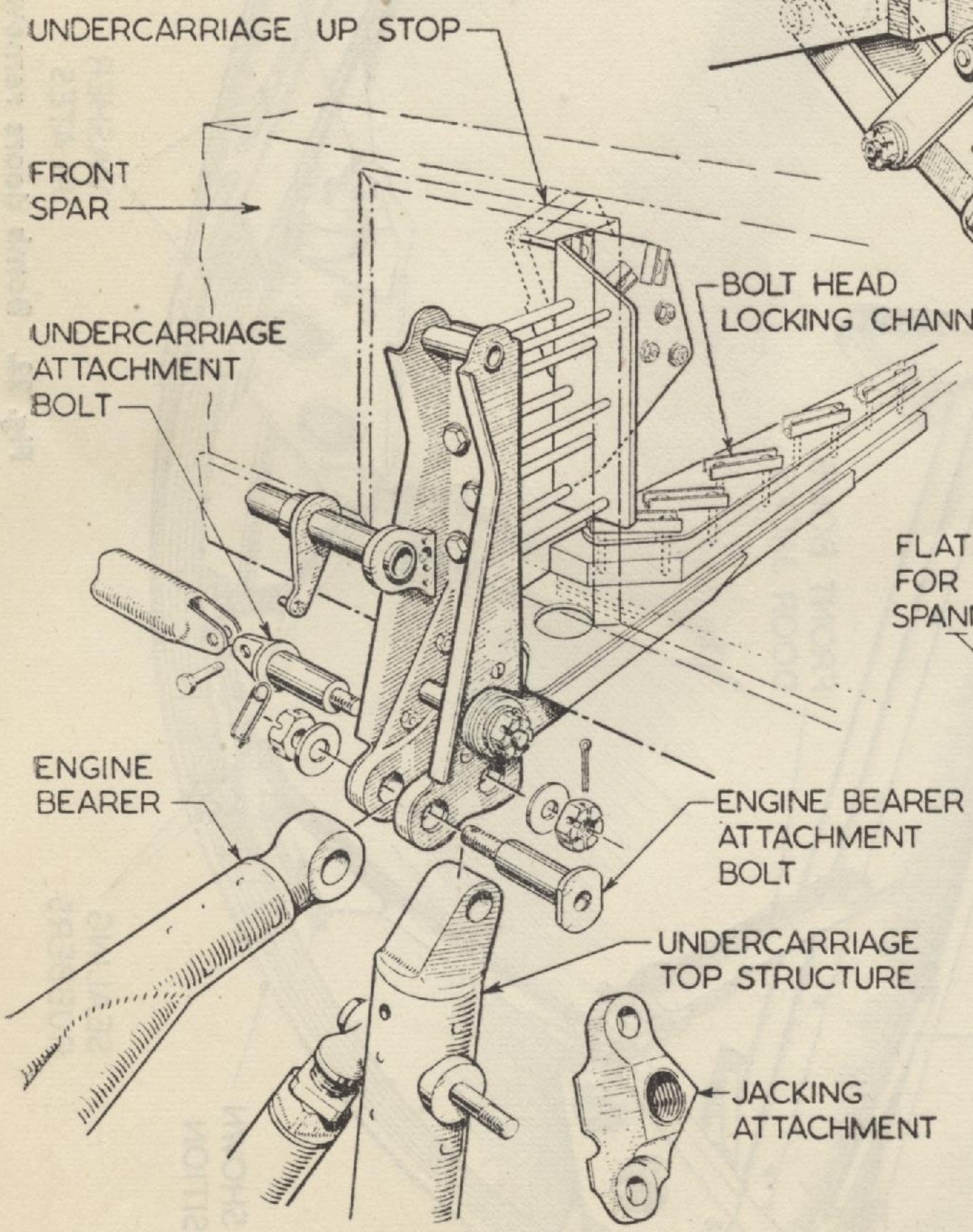

PORT OUTBOARD FRONT ATTACHMENT BRACKET

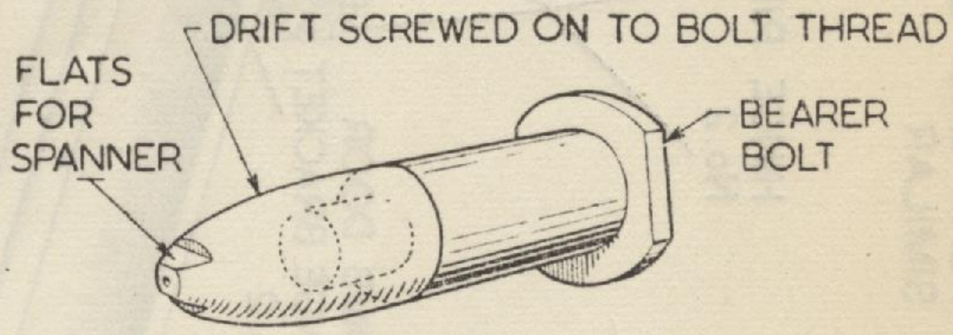

BULLET DRIFT FOR ASSEMBLY OF BOLTS

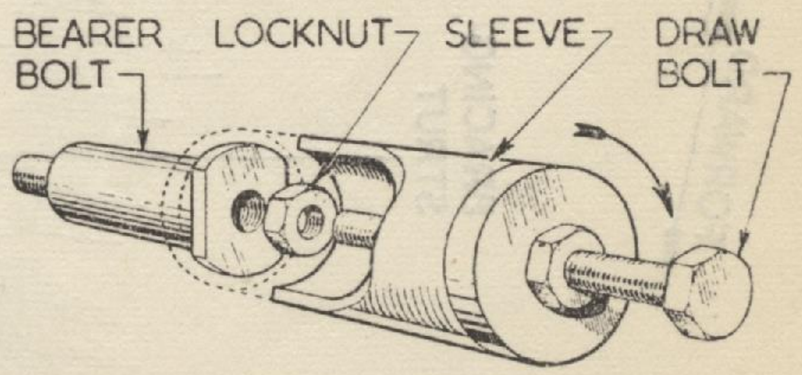

TOOL FOR WITHDRAWING TOP AND BOTTOM ENGINE BEARER BOLTS

Fig. 21. Undercarriage top structure and engine mounting pick up brackets

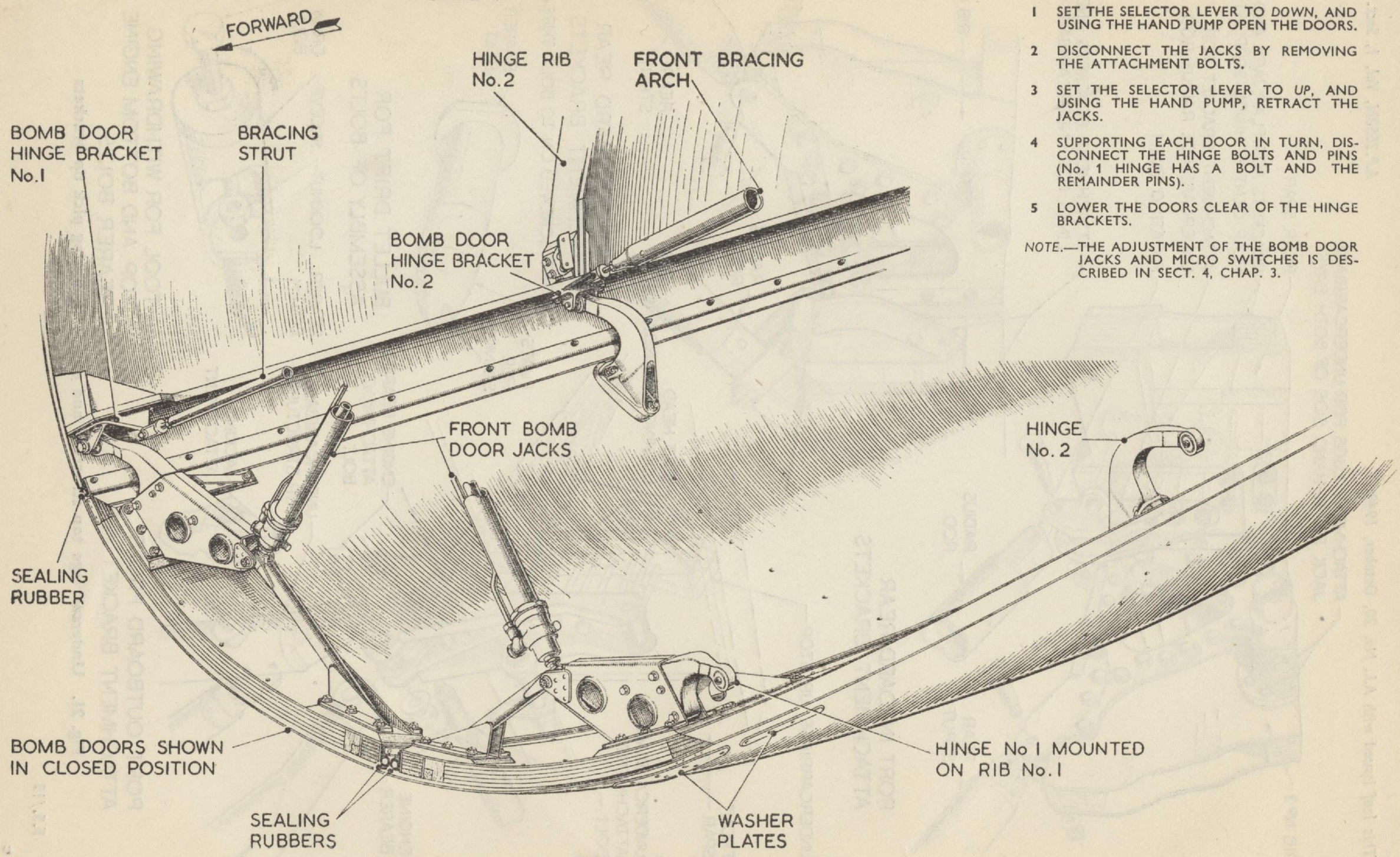

Fig. 22. Bomb doors removal

BOMB DOORS REMOVAL

1 SET THE SELECTOR LEVER TO *DOWN*, AND USING THE HAND PUMP OPEN THE DOORS.

2 DISCONNECT THE JACKS BY REMOVING THE ATTACHMENT BOLTS.

3 SET THE SELECTOR LEVER TO *UP*, AND USING THE HAND PUMP, RETRACT THE JACKS.

4 SUPPORTING EACH DOOR IN TURN, DISCONNECT THE HINGE BOLTS AND PINS (No. 1 HINGE HAS A BOLT AND THE REMAINDER PINS).

5 LOWER THE DOORS CLEAR OF THE HINGE BRACKETS.

NOTE.—THE ADJUSTMENT OF THE BOMB DOOR JACKS AND MICRO SWITCHES IS DESCRIBED IN SECT. 4, CHAP. 3.

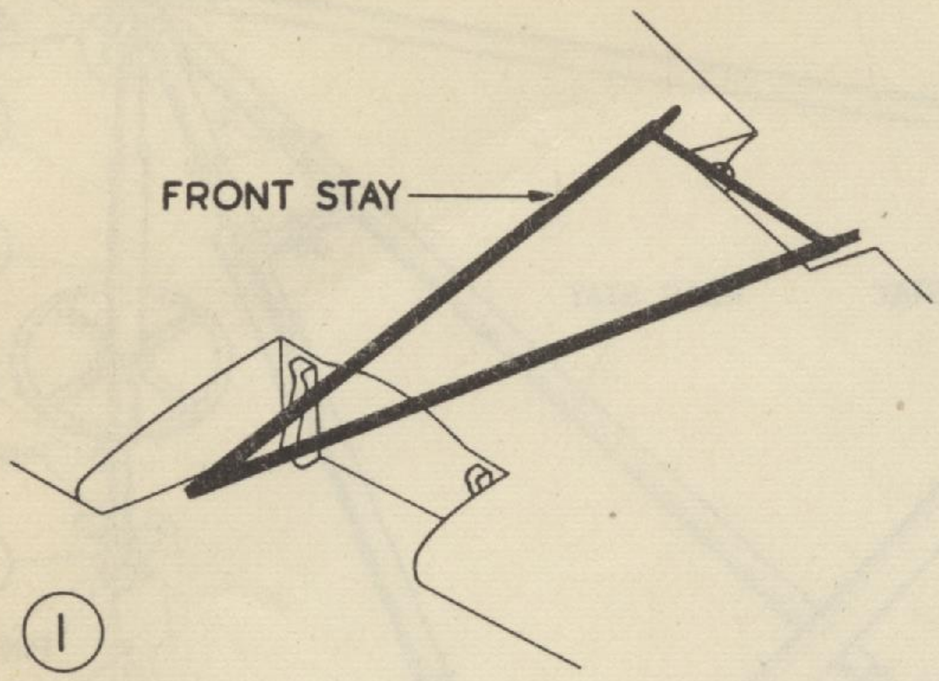

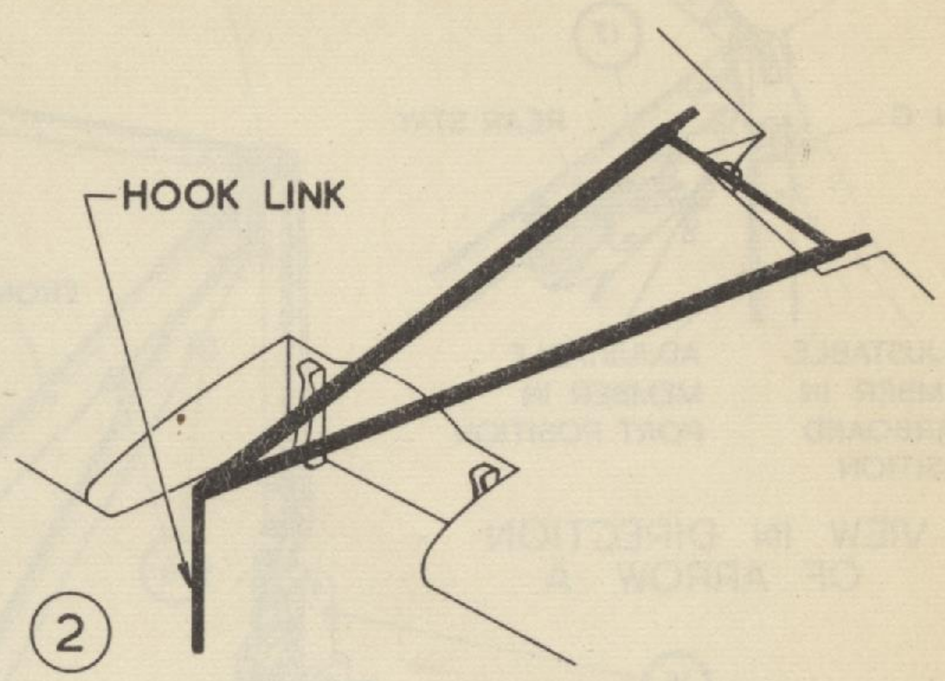

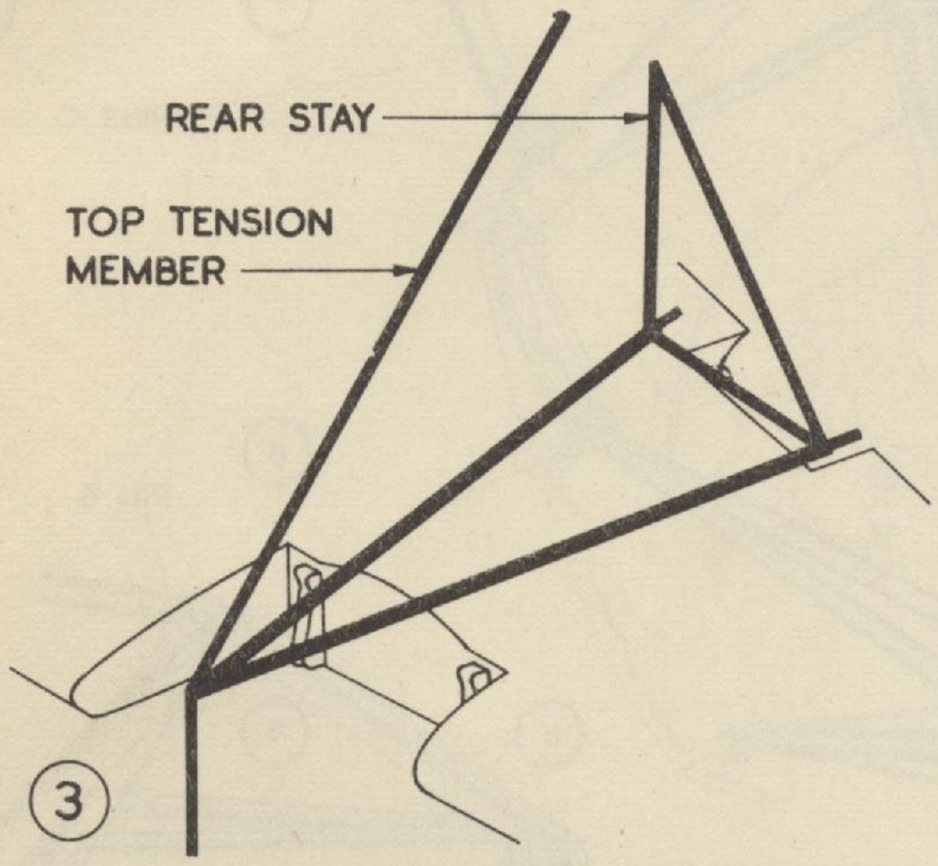

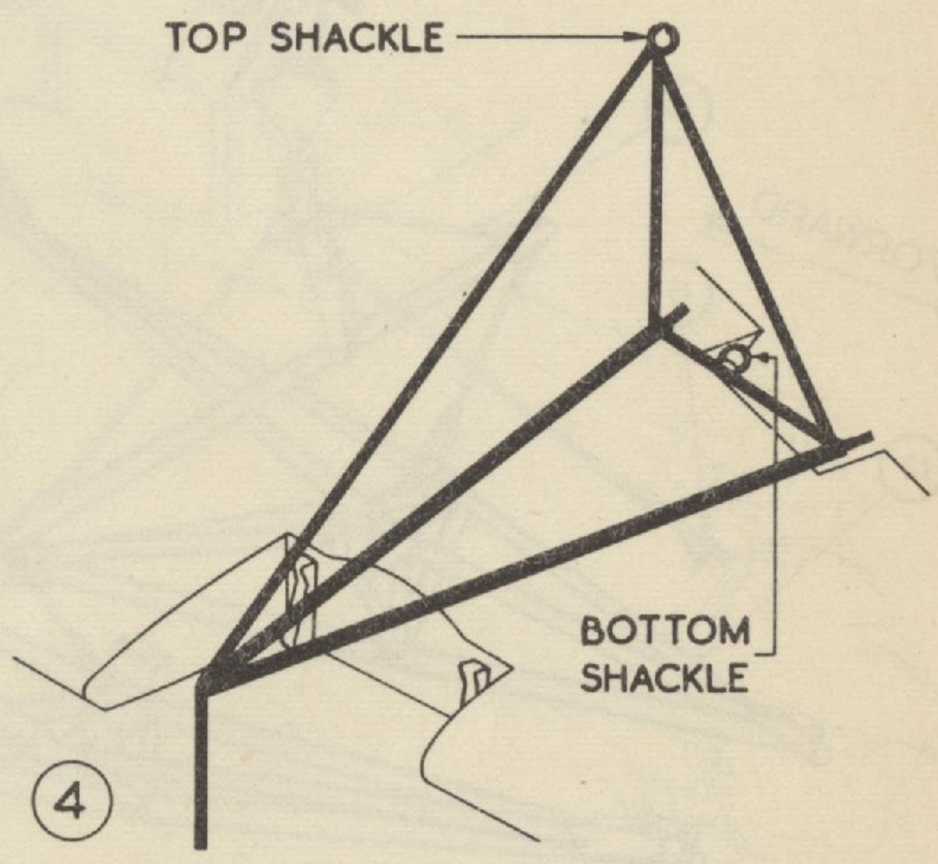

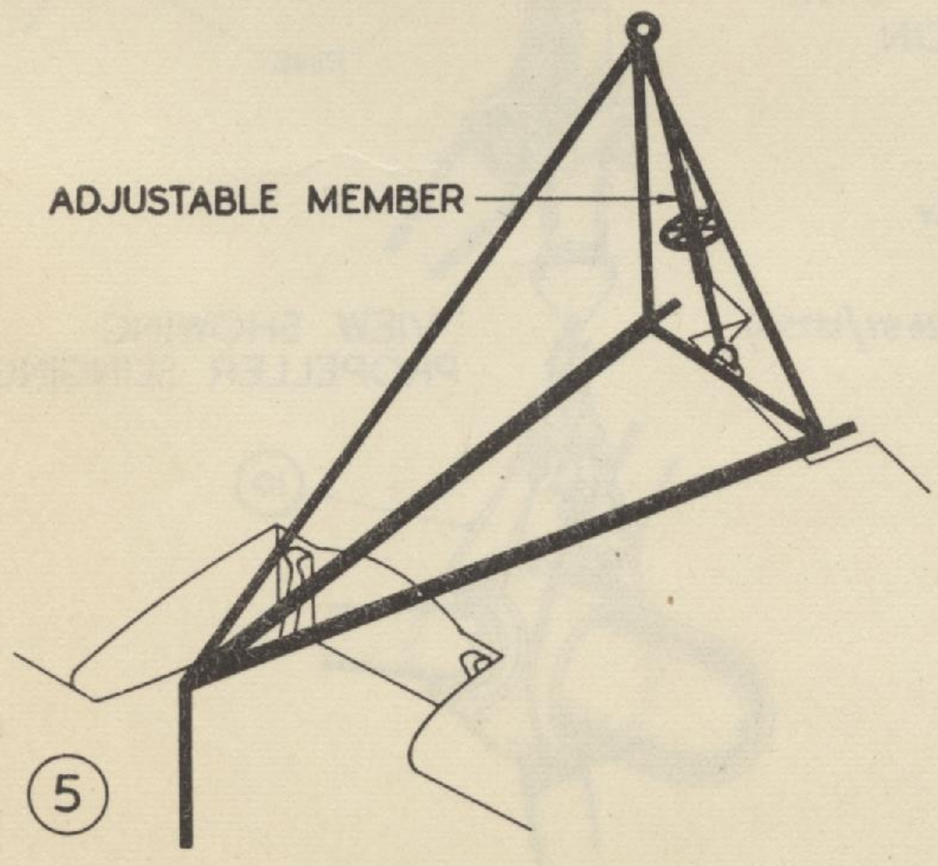

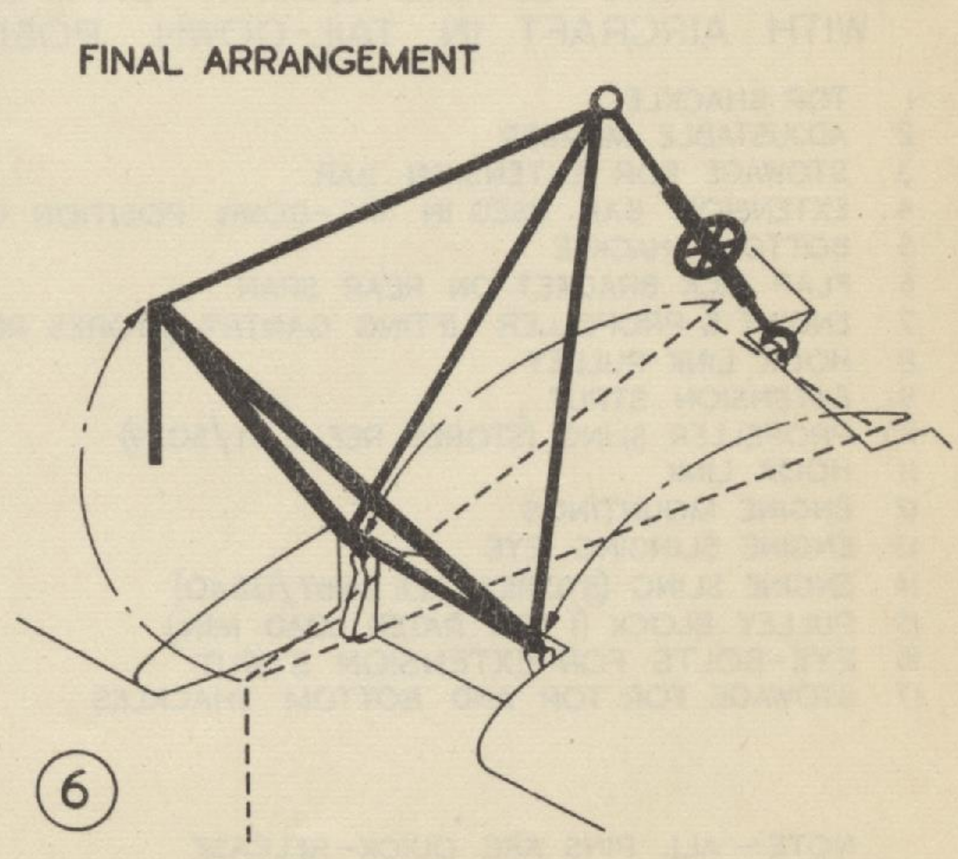

FIG. 23 ERECTION OF LIFTING GANTRY

G2306 M28541 10/49 550 C.B.&S.LTD.: GP.55.

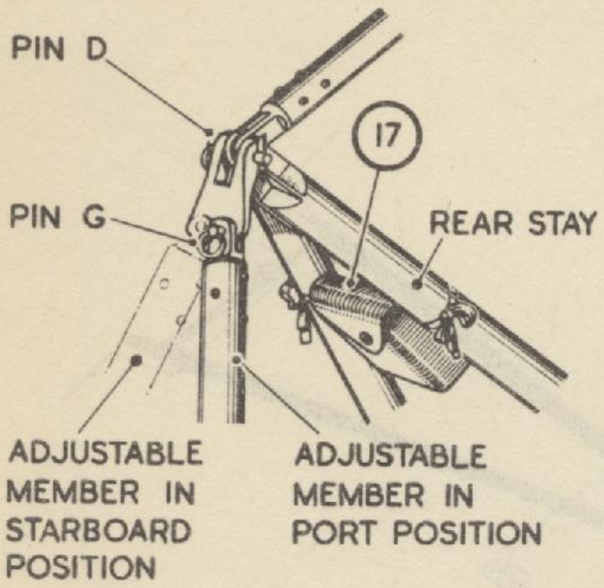

VIEW IN DIRECTION OF ARROW A

VIEW SHOWING LIFTING GANTRY ON PORT WING WITH AIRCRAFT IN TAIL-DOWN POSITION

1 TOP SHACKLE
2 ADJUSTABLE MEMBER
3 STOWAGE FOR EXTENSION BAR
4 EXTENSION BAR, USED IN TAIL-DOWN POSITION ONLY
5 BOTTOM SHACKLE
6 FLAP JACK BRACKET ON REAR SPAR
7 ENGINE & PROPELLER LIFTING GANTRY (STORES REF. 26BY/13750)
8 HOOK LINK PULLEY
9 EXTENSION STRUT
10 PROPELLER SLING (STORES REF. 26BY/5029)
11 HOOK LINK
12 ENGINE MOUNTINGS
13 ENGINE SLINGING EYE
14 ENGINE SLING (STORES REF. 26BY/13840)
15 PULLEY BLOCK (1 TON RATED LOAD MIN.)
16 EYE-BOLTS FOR EXTENSION STRUT
17 STOWAGE FOR TOP AND BOTTOM SHACKLES

NOTE:- ALL PINS ARE QUICK-RELEASE

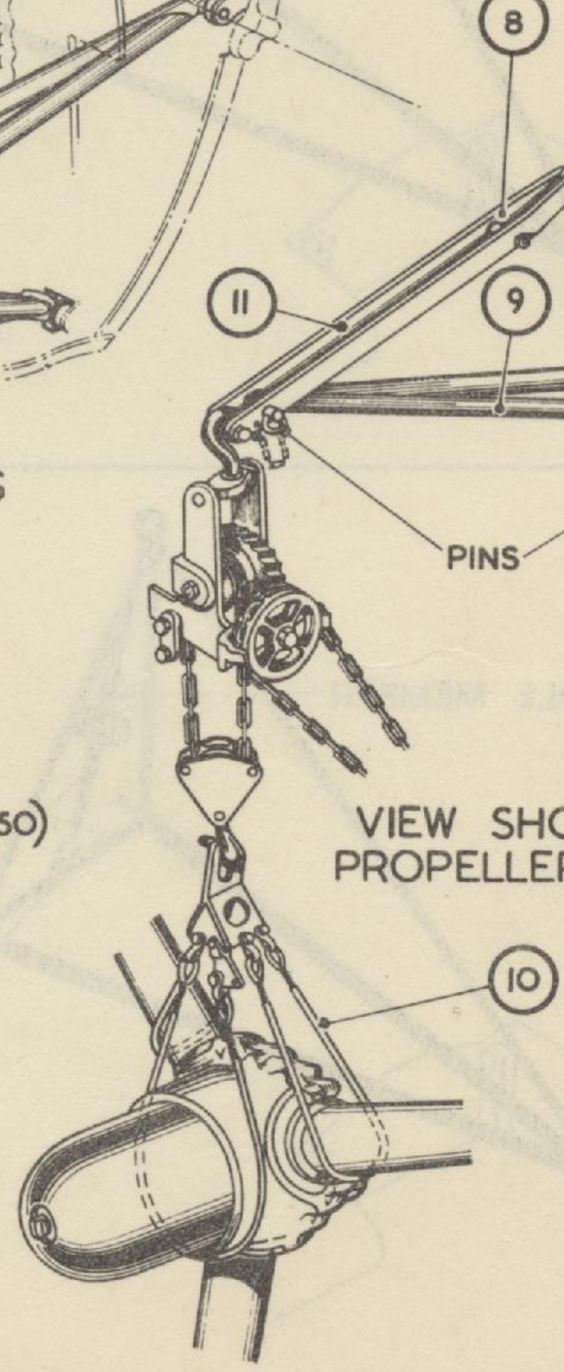

VIEW SHOWING PROPELLER SLINGING

FIG. 24 ENGINE AND PROPELLER LIFTING GANTRY

ENGINE GANTRY ASSEMBLY (FIG. 23 and 24)

Assembly

1. To enable the propeller and power plant to be removed without recourse to mobile or other cranes, an engine and propeller lifting gantry, Stores Ref. 26BY/13750 is issued with the ground equipment. The gantry is supported on the front spar attachments of the engine and is braced to a lug on the rear spar. All the pins used to assemble the gantry are of the quick-release type.

2. Before placing the gantry in position, a double thickness of coarse matting or main-plane mats, should be placed on the wing and over the leading edge to prevent damage when handling the gantry and also to give foothold on the wing. Four men are required to erect the gantry, the sequence for which is as follows :—

(1) With two men standing on the wing outboard of the engine, the front stay is handed up, base first, and laid on the wing with the top facing forward and the lugs for the rear stay on top. Hand up the top tension member, hook-link and rear stay.

(2) Assemble the hook-link to the front stay with the pin A attached to the front stay.

(3) Assemble the top tension members and rear stay to the front stay, using pins B and C respectively. The rear stay is clearly marked FRONT and is assembled with the FRONT marking facing forward.

(4) Connect the top tension member and the rear stay to complete the triangulated structure and attach the top shackle (in a stowage on the rear stay), with pin D. Attach the bottom shackle to the rear spar fitting with pin F.

(5) Attach the adjustable member to the top shackle with pin G. Two holes are drilled in the shackle, the right-hand hole (looking forward) for use on the port wing and the left-hand hole for use on the starboard wing. Attach the bottom end of the adjustable member to the bottom shackle with pin H.

(6) With a man at each member of the front and rear stays, lift the gantry carefully, carrying the feet forward without permitting them to touch the wing surface, and place them in position on the bolts at the top of the engine bearer upper attaching plates (*fig.* 21). It will be found easier to locate one leg first and move the gantry to the outer face until it touches the side plate, the opposite side will then drop easily into position.

(7) Insert a rope round the pulley on the hook-link and hoist the pulley block and chain into position.

(8) Attach the engine sling, Stores Ref. 26BY/13840, to the engine at the rear feet brackets and to the eye on the reduction gear casing. Turn the adjuster wheel on the gantry until the lifting hook is lined up so that a vertical lift is obtained when the strain is applied. Ensure that the tension of the front and rear sling cables is equal.

Note . . .

If the power plants are removed with the aircraft in the tail down position, it will be necessary to insert the extension bar into the adjustable member, before attaching it to the rear spar. The extension bar is stowed on the rear stay. It will also be necessary to attach the front cable of the engine sling to the hole marked TAIL DOWN *on the engine sling "pick-up."*

IMPORTANT

A load of 500 lb. must be applied to the fuselage rear end, or the tail picketed down when engines are slung on the gantries.

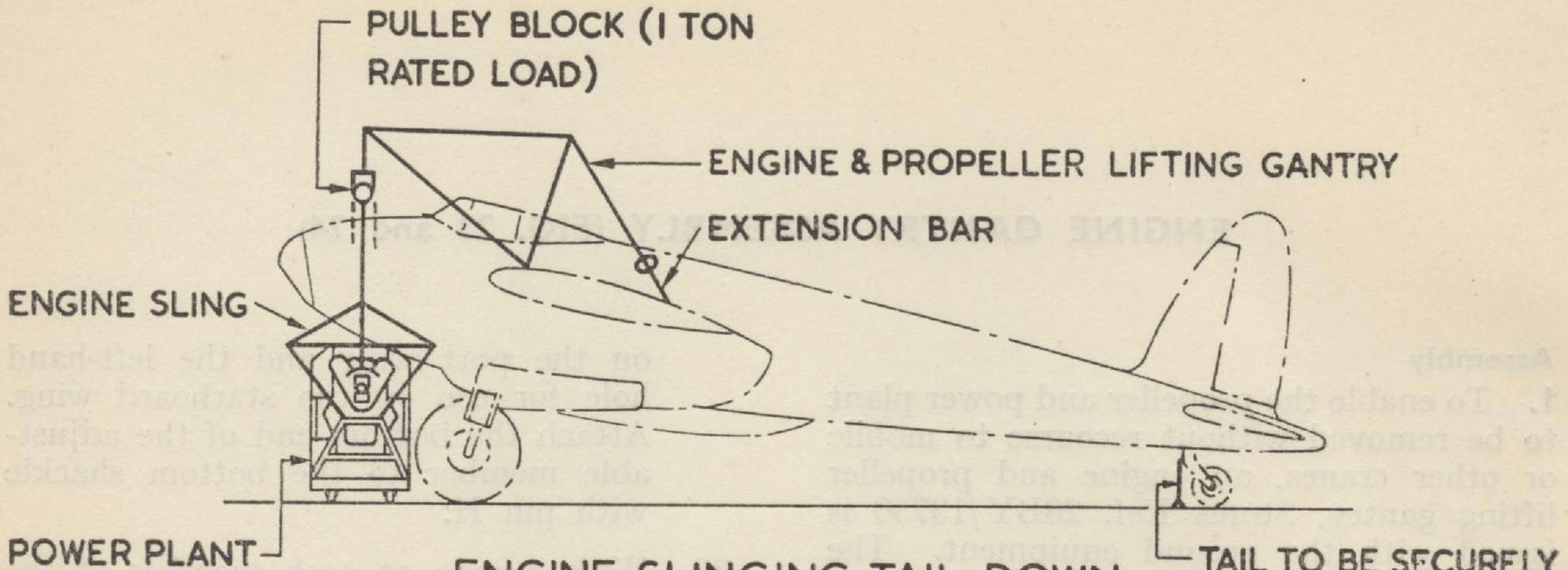

ENGINE SLINGING TAIL DOWN

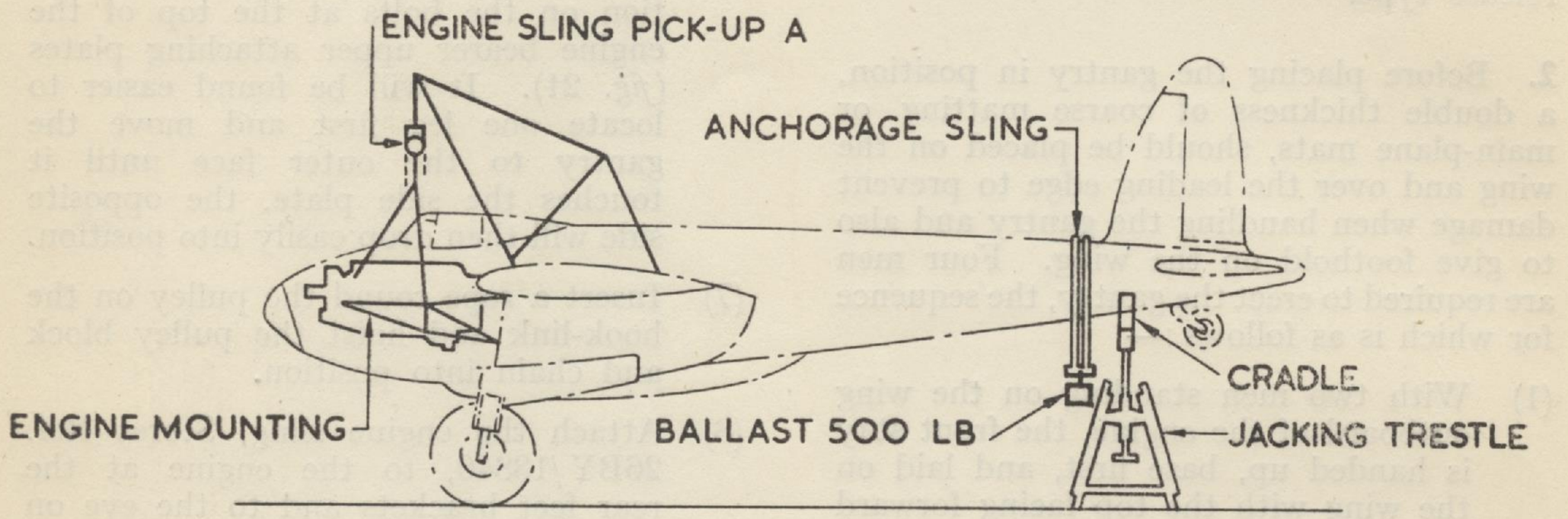

ENGINE SLINGING TAIL UP

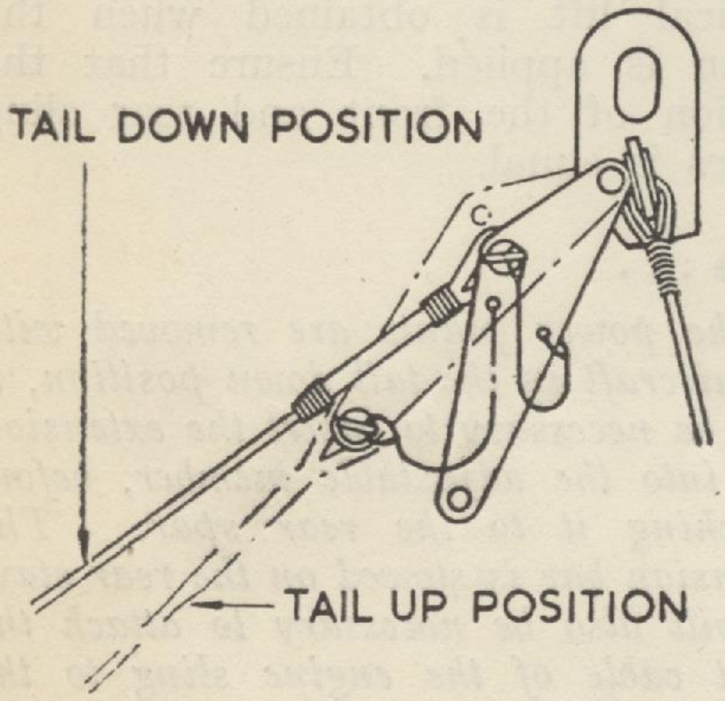

NAME OF PART	STORES REF.
ENGINE & PROPELLER LIFTING GANTRY	26BY/13750
ENGINE SLING	26BY/13840
ENGINE MOUNTING	26BY/16377
ANCHORAGE SLING	26BY/5015
CRADLE	26BY/5011

DETAIL OF ENGINE SLING PICK-UP A

Fig. 25. Engine slinging

G2305 M28540 10/49 550 C.B.&S.Ltd. Gp.30

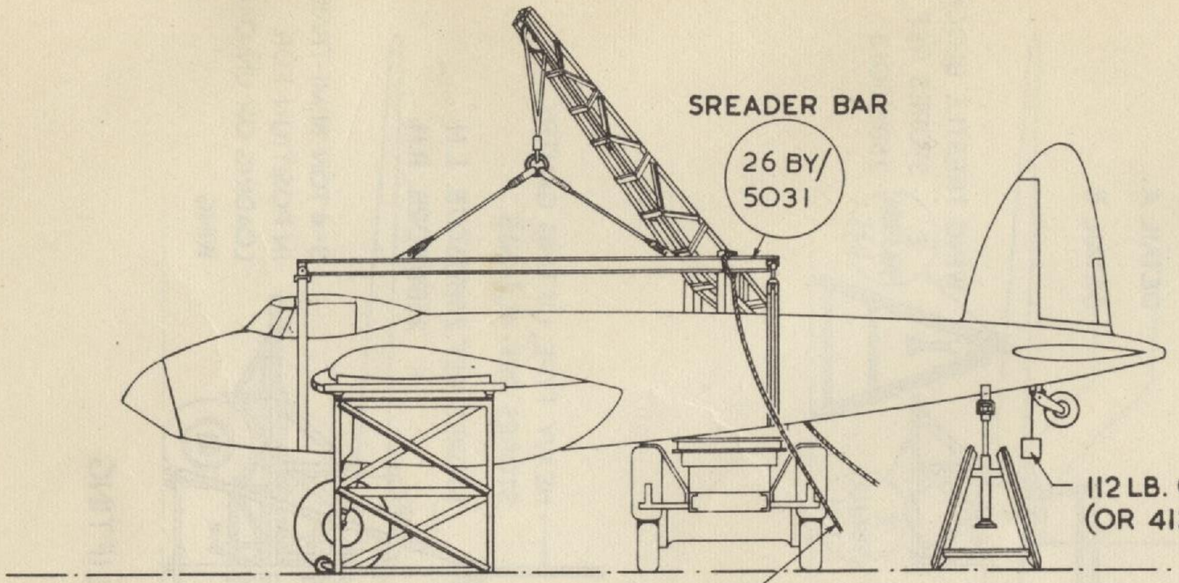

FUSELAGE — SLINGING

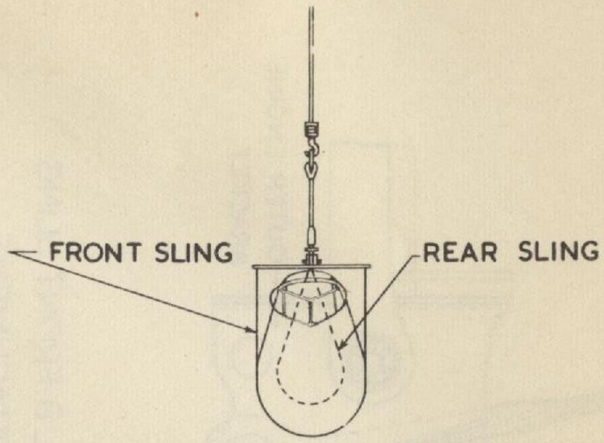

FRONT VIEW OF SLINGING

NOTE:
POSITIONS OF SLINGS AND TRESTLES ARE PAINTED ON FUSELAGE.

TO PREVENT FRONT END OF SPREADER BAR HITTING COCKPIT CANOPY, HOLD BAR HORIZONTAL BY ROPE AS SHOWN ABOVE.

UNDER NO CIRCUMSTANCES MAY THE SPREADER BAR AND SLINGS BE USED FOR LIFTING THE COMPLETE AIRCRAFT.

JURY FRAME MUST BE FITTED TO FUSELAGE IMMEDIATELY AFTER REMOVAL FROM WING.

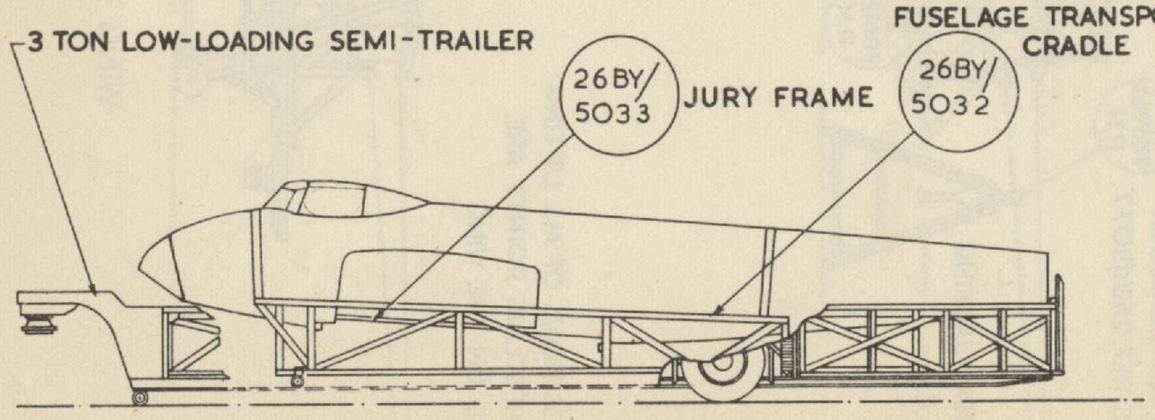

FUSELAGE—TRANSPORT

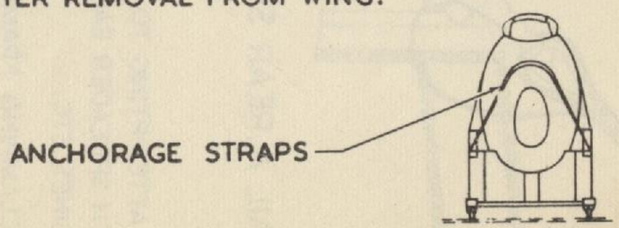

REAR VIEW OF TRANSPORT CRADLE

FIG. 26 TRANSPORT OF FUSELAGE

G23C6 M28541 10/49 550 C.B.& S. LTD. G.P.55.

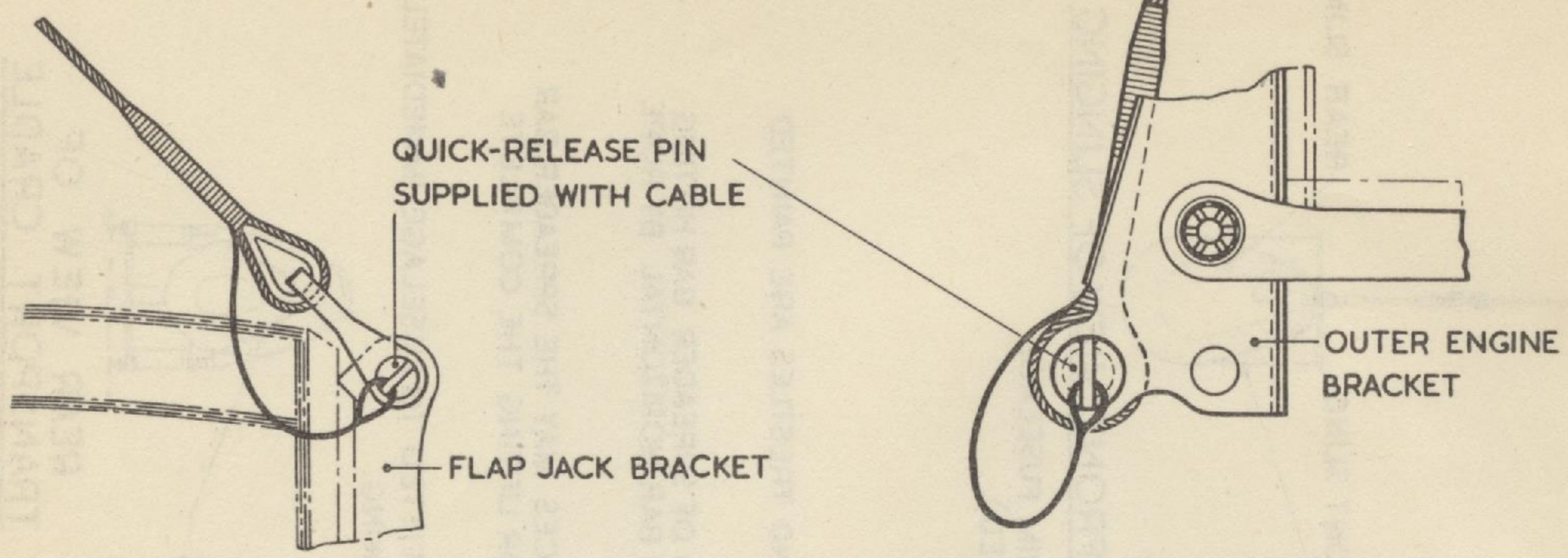

DETAIL A. REAR SLING ATTACHMENT

DETAIL B. FRONT SLING ATTACHMENT

NOTE.
BEFORE ATTEMPTING TO LIFT THE WING WITH SPREADER BAR, REMOVE THE ENGINES, ETC.

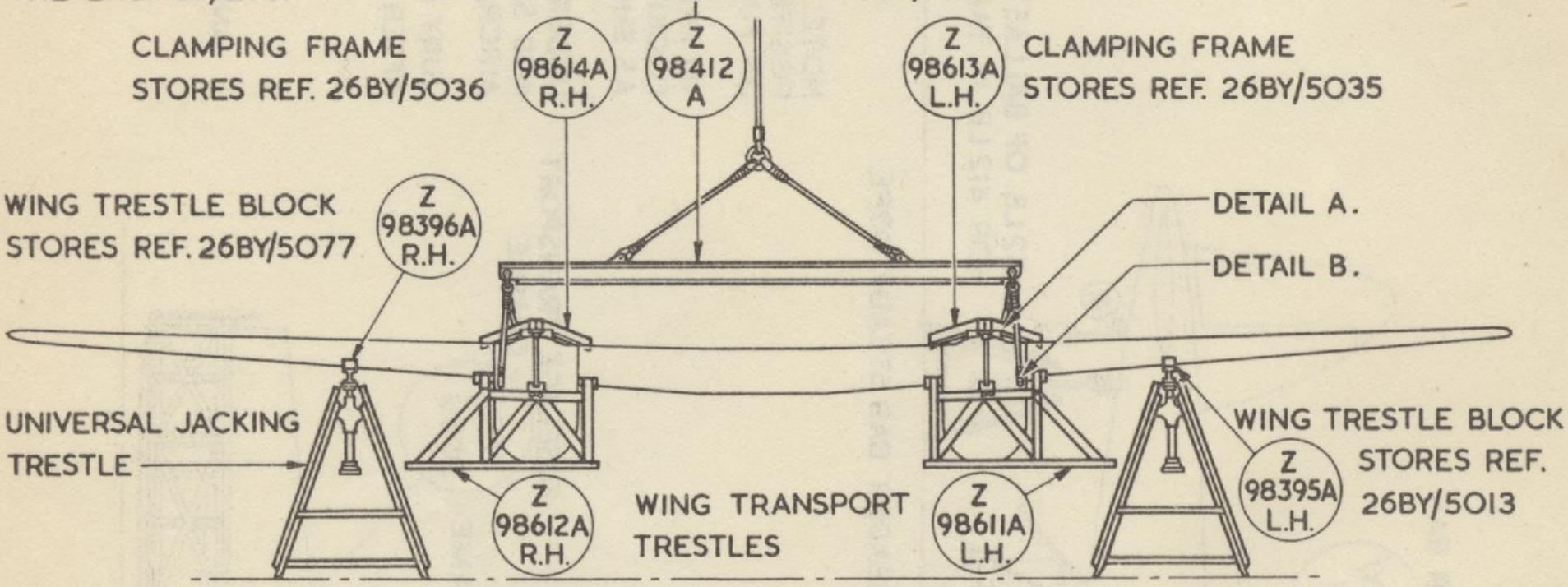

WING SLINGING

NOTE.
THE POSITIONS OF ALL LIFTING AND TRESTLING POINTS ARE PAINTED ON THE WING

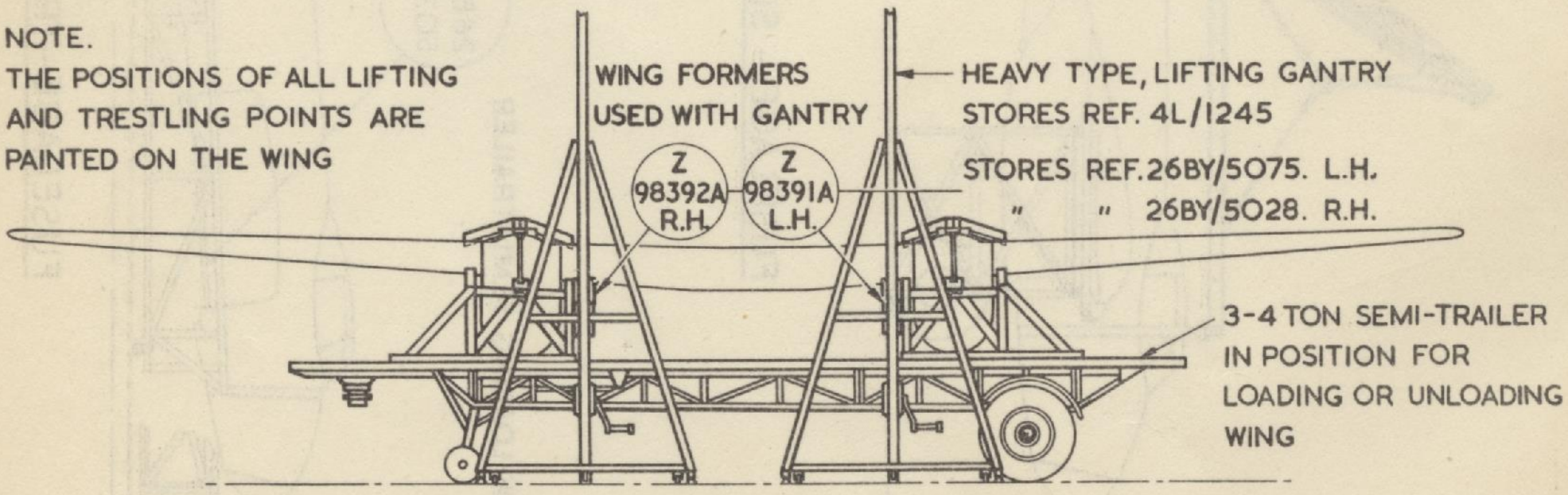

WING TRANSPORT AND LIFTING

FIG. 27 TRANSPORT OF WING

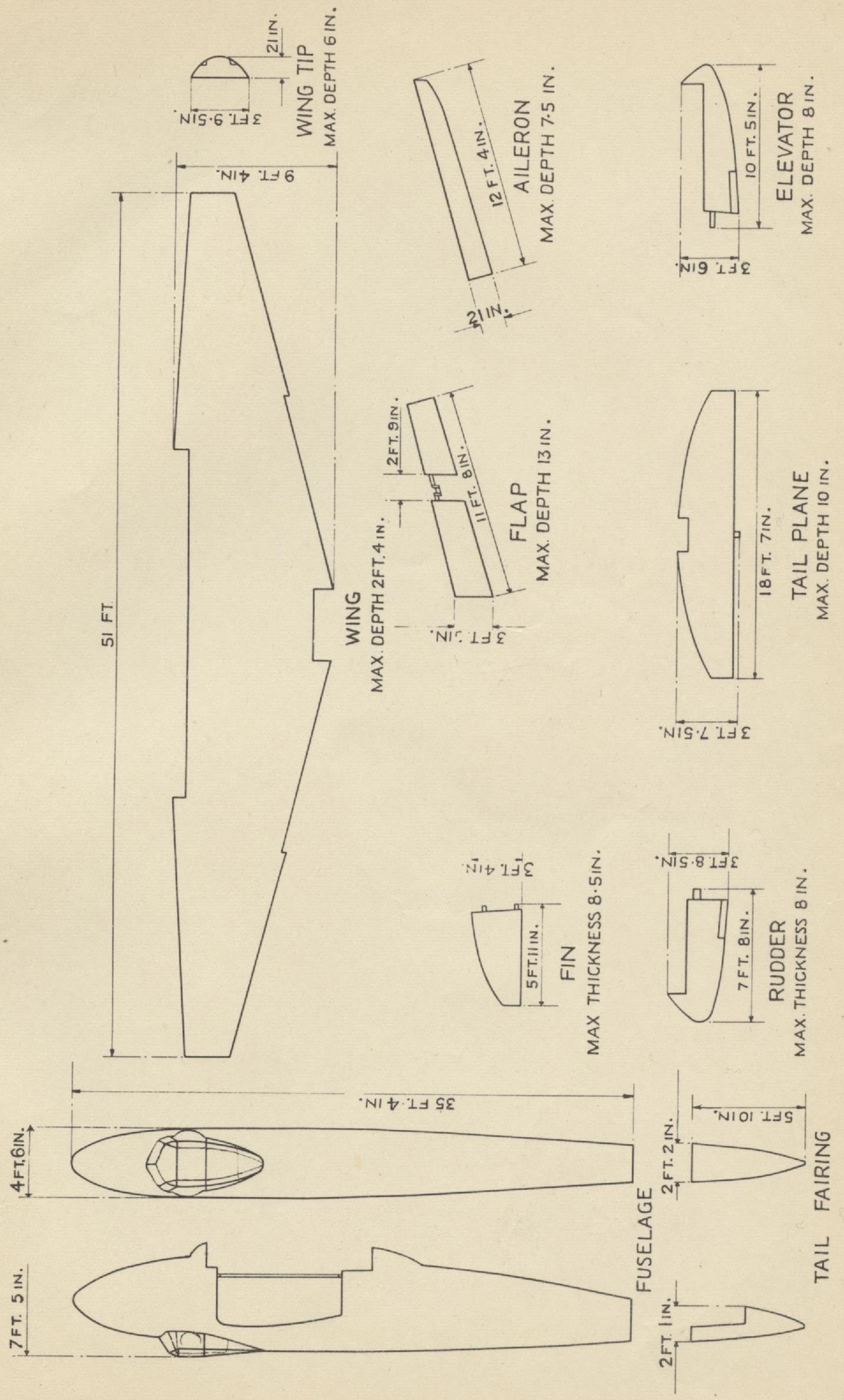

FIG. 28 MINIMUM PACKING DIMENSIONS

G2306 M28541 10/49 550 C.B. & S. LTD. GP.55.

SECTION 6

ELECTRICAL AND RADIO INSTALLATIONS

LIST OF CHAPTERS

Note.—*A list of contents appears at the beginning of each chapter*

1 Electrical installation

2 The information previously contained in this chapter, now appears in Chapter 1.

3 Wireless installations

4 Radar installations

CHAPTER 1

ELECTRICAL INSTALLATION

Chapter 1

ELECTRICAL INSTALLATION

LIST OF CONTENTS

	Para.
Introduction	1
Interpretation of diagrams	
Location diagrams	4
Schematic diagrams	5
Routing charts	6
Installation details	
Wiring system	8
Junction boxes	11
Bonding	12
Conduit jointing	13
Power supplies	
U2 and O2 generator installation (mod. 1128)	14
Twin HX2 generator installation (mod. 1601)	15
Twin UO generator installation (mod. 1428)	16
Fuses	19
Filament lamps	20
Access to components	21
Engine starting and propeller feathering	22
Ignition and booster coils	25
Fire extinguisher and fire warning	27
Supercharger control	29
Tropical air intake, and hot and cold air supply	30
Oil dilution	31
Oil and radiator thermometers	32
Fuel booster pumps	35
Long range fuel pump	42
Pressure head heater	43
Dinghy release and wing-tank jettison	44
Undercarriage indicator and warning horn	47
Desynn indicators and transmitters	49
D.R. compass	51
Tachometers	52
A.M.U.—A.P.I. (mod. 1122)	53
Landing lamps	54
Navigation lamps	55
Identification lamps	56
Bomb sights	57
Bombing—converted aircraft (mod. 1114, 1116, and 1117)	59
Bombing—unconverted aircraft	66
Camera supplies—unconverted aircraft	67

LIST OF TABLES

	Table
List of fuses	1
List of filament lamps	2
Access to components	3

LIST OF ILLUSTRATIONS

	Fig.
Location diagram—converted aircraft	1
Location diagram—unconverted aircraft	2
D.C. and A.C. power supplies and distribution O2 and U2 (mod. 1128)	3
D.C. and A.C. power supplies and distribution twin UO (mod. 1428)	4
D.C. power supply and distribution twin HX2 (mod. 1601)	5
Engine starting and propeller feathering—SA, SD	6
Ignition and booster coils—HA, HD : Tachometers—RA, RD	7
Undercarriage indicator and warning horn—U, UZ	8
Fuel contents indicators—S	9
Fire extinguisher and fire warning—FA, FD (pre-mod. 1107)	10
Fire extinguisher and fire warning FA, FD (post-mod. 1107)	11
Oil dilution—WA-WD, Supercharger control—BC	12
Coolant thermometer—RT, Oil thermometer—OT	13
Long range fuel pumps and pressure warning—PP / Fuel tank jettison—Y	14
Landing lamps—LA, LD, flap position indicator—F	15
Instrument lighting—N, MM (pre-mod. 1112)	16
Instrument lighting—M, MM, UV (post-mod. 1112)	17
Interior lighting—M, MM	18
Emergency lamp—EM / Pressure head heater—P / Dinghy release—Y	19
Navigation lamps—N	20
Identification lamps—J	21
Resin lamps—GL	22
Tropical air intake—TC	23
Tropical air intake—TC (mod. 1063 amend. 1)	24
Tropical air intake and hot and cold air supply—TC	25
Fuel booster pumps—BP	26
Fuel booster pumps—BP	27

	Fig.
Fuel booster pumps—BP	28
Banner towing—BT	29
Induction charge thermometer—CA	30
Oil pressure—OP	31
D.R. compass—DR	32
Bombs and photo flash 4·5 in.—B (post-mod. 1116 and 1117)	33
Cameras and camera heater—R—CH (post-mod. 1116 and 1117)	34
Multi-photo flash 1·5 in. and heater—R—MFH....	35
T.I. bomb sight—BS, A.D.R.I.S.—AM—AP	36
Mk. 14 bomb sight—BS	37
Camera thermometers and heaters—CT, CH	38
Bombs—B (pre-mod. 1116)	39
Cameras—R (pre-mod. 1116 and 1117)	40
Schematic diagrams	41
Schematic diagrams	42
Schematic diagrams	43
Schematic diagrams	44

INTRODUCTION

1. This chapter contains diagrams giving the location of the electrical components, schematic diagrams showing the functioning of the electrical circuits, routing charts showing the wiring of the various services, and notes on the servicing of the equipment and access to the components. For detailed information on standard items of equipment, reference should be made to the associated Air Publication. A list of Associated Publications is given at the beginning of this book.

2. Attention is drawn to the introduction of this publication which defines the relevant modification standard of converted and unconverted aircraft. Mod. 1619 and 1627 introduces banner-target launching and towing equipment, the warning light system being described in this chapter. The introduction of this equipment necessitates generator changes; the type of generator to be fitted is dependent upon the modification state of the aircraft, i.e., converted or unconverted. The basic generator installation for Mosquito B Mk. 35 being one Type U2 and one Type O2 generator fitted by mod. 1128.

3. When mod. 1619 and 1627 are embodied the generator installation is also changed. Aircraft which are fitted with Type U2 and O2 generators, will have two Type UO generators fitted by mod. 1428, and aircraft which have Type KX and R generators, will have two Type HX2 generators fitted, before issue to the service, by mod. 1601. When the aircraft are reverted to the bomber role, the generator installation remains as for the banner towing role. It is, therefore, possible to have the following variants of Mosquito B Mk. 35 aircraft.

Bomber role
(1) One U2 and one O2 generator
(2) Two UO generators
(3) Two HX2 generators

} On reversion from banner towing role

Banner towing role
(1) Two UO generators
(2) Two HX2 generators

Interpretation of diagrams

Location diagram

4. Two location diagrams are issued with this chapter, one for converted aircraft, i.e., those fitted with Type U2 and O2 generators—mod. 1128, or twin Type UO generators fitted by mod. 1428 which is consequential on the embodiment of mod. 1619 and 1627, and one for unconverted aircraft, i.e., those fitted with twin Type HX2 generators—mod. 1601, which is consequential on the embodiment of mod. 1619 and 1627. The terminal block numbers are not marked on the block themselves, but are only arbitrary between the routing charts and the location diagrams.

Schematic diagrams

5. The schematic diagrams show each circuit laid out in theoretical form, and enable the reader to understand the function of a circuit.

Routing charts

6. The various electrical circuits are laid out in the form of routing charts. These charts have vertical columns, each column representing either a junction box, a bulkhead plug, a connector pin reference or an equipment panel, as indicated at the head of each column. Where a routing chart bears more than one circuit, adjacent circuits are separated by a heavy horizontal line.

7. The method of reading a routing chart is as follows. Referring to circuit U.V.

(*fig.* 17), current is supplied from fuse No. 44 (by a cable coded UV+) to a dimmer switch and thence to the left-hand U.V. lamp by cable UV2. Connection between this lamp and terminal block 64 is made by cable UV3 and continued by ducel 4 cable to the right-hand U.V. lamp. Included in the latter cable is the negative wire from the lamp to terminal block 64. Reference should be made to the diagram of negative returns (*fig.* 3) for the continuation of this lead. Reading from left to right it will be seen that the circuit UV (right-hand U.V. floodlamp) runs from T.B.64 (which is found in the column headed "External CCTs and T.Bs") to the point D in the column headed "Inter Conns" and thence to T.B.10, shown in the main negative circuits. Terminal blocks are not numbered on the aircraft, the number shown on the routing chart is for reference only and is used in conjunction with the location diagrams.

Installation details

Wiring system

8. Wiring in the fuselage is carried through a system of junction boxes, the interconnections being contained in polyvinyl conduits with sockets at each end. Polyvinyl conduits are used generally except where metal sheathing is essential for screening. The system also includes cable loom assemblies, consisting of multi-pole sockets with loose "cel" cables attached, these being connected to components in the vicinity of the junction box to which the cable loom is connected. Light alloy conduits are fitted at some points in the wing to carry the loose "cel" cables.

9. Conduits are identified by a label at each socket. Each circuit is allocated a reference letter or letters, i.e., P, FA, or FD. In the latter examples the letter A refers to port, and D to starboard.

10. On the location diagrams and routing charts, the junction boxes are prefixed by letters J.B. and are referred to alphabetically, i.e., J.B.A., J.B.B., J.B.C., etc. The negative connection of any circuit is taken to the nearest main terminal block or junction box, there being at least one negative terminal block in each junction box. A diagram of negative returns is given in fig. 3.

Junction boxes

11. The main junction boxes are J.B.A. under the cockpit combing, J.B.B. and J.B.C. on the starboard side of the fuselage and J.B.D. on the rear starboard side of the wing deck. The latter is used for distribution to the wings, the wiring passing through the bottom of the box into the wing, where it divides and is taken through open-ended alloy conduits to J.B.E. and J.B.F. situated on the rear fuselage of the front spar in the port and starboard wheel wells, respectively. J.B.E. and J.B.F. each house a number of removable links which enable the negative return of some of the circuits to be easily disconnected, thus facilitating fault finding. J.B.J. is located in the nose of the aircraft.

Bonding

12. All metal structural components, pipes, braided cables, fuel and oil tanks, etc., are bonded throughout the aircraft to maintain an equal potential. When testing, the resistance between any bonded component and the main earth strip should not exceed 0·025 ohm, and should not exceed 0·05 ohm when testing between the wing, tail plane and the main earth strip. Tests should also be made between all moving control surfaces and the component to which they are hinged, to check for effective bonding.

Conduit jointing

13. When making a joint it is essential that the tubing should be clean and scraped where the joint is to be made, and the end of the inserted tube must be prepared with Bostik B. When jointing, the Bostik should be pressed down between the tubes, closing the joint, and during the drying period both tubes must be supported. When dry, the joint should be coated with Polon varnish.

POWER SUPPLIES

U2 and O2 generator installation (mod. 1128)

14. The Type U2 and O2 generator installation—mod. 1128—is the basic installation for aircraft operating in the normal bomber role. D.C. power is supplied by a generator, Type O2, mounted on the starboard engine; the full load output is 30 volts, 100 amp. This generator charges two 40-amp. hr, batteries connected in series. A voltage regulator, Type J2, maintains a constant voltage, irrespective

of engine speed and load fluctuations. The cut-out, Type G, prevents reverse feed from the batteries should the generator voltage fall appreciably below that of the battery, this being indicated by a warning lamp on J. B. B. An a.c. generator, Type U2, mounted on the port engine, is separately excited by d.c. from the batteries. The a.c. output from this generator is controlled by a voltage regulator, Type E, contained in a control panel, Type 5.

Twin HX2 generator installation (mod. 1601)

15. Two generators, Type HX2, are fitted —one on each engine—to unconverted aircraft which have been modified for banner-target launching and towing. This generator installation is identical to that fitted in Mosquito TT Mk. 35 aircraft. The full load output of each generator is 29 volts, 50-amp. The outputs of the generators are connected in parallel and charge two 12-volt, 40-amp. hr., batteries connected in series. Two, Type A2, combined voltage regulator and cut-out units, fitted to a panel on the wing-deck, maintain a constant voltage irrespective of generator speed and load fluctuations. The cut-outs give reverse feed protection and further protection is provided by the 5-amp. fuse connected between terminals number 5 on the voltage regulators. Field switches located on the switch panel enable a faulty generator to be isolated from the system. Generator failure warning lamps, fitted on J.B.B., indicate when the generator voltage falls below that of the batteries. A voltmeter fitted to J.B.B. will indicate if a supply is connected to the system. A 3-way T.B. labelled TEST POINT, enables individual adjustment of the voltage regulators to be made ; the centre terminal of the block is connected to the common negative and the outer terminals to the respective generator circuits.

Twin UO generator installation (mod. 1428)

16. The twin UO generator installation is fitted to converted aircraft when modified for banner-target launching and towing. The generators are fitted one to the port side of each engine. The d.c. output of each generator is 100 amp. at 30 volts and the a.c. output is 15 amp. at 80 volts. The d.c. outputs of the generators are connected in parallel and charge two 12-volt batteries connected in series. Type J2 voltage regulators maintain a constant generator voltage irrespective of engine speed and load fluctuations. Type G cut-outs give reverse feed protection. Power failure warning lamps, fitted in junction box B, indicate when the generators are not charging the batteries. A test panel for checking output voltages and currents under varying conditions is fitted below junction box A. This panel contains sockets, labelled VOLTS and AMPS, generator field circuit breakers and generator isolating switches, thus allowing complete and separate checks to be made of both generators either during ground engine runs or during flight. The two 100-amp., 50-mV, shunts connected across the AMPS test socket are fitted to a panel on the wing deck beneath the Type L dinghy stowage box. When using a Type D testmeter to take current readings, it is necessary to use the millivolt scale of the testmeter, a reading of 50 mV being equal to 100 amp.

17. A ground /flight switch is fitted to the left-hand side of the test panel and with the switch at GROUND all the electrical services —with the exception of the fire extinguisher circuits—are isolated from the aircraft battery. The aircraft battery is connected to the bus-bar through the contacts of a magnetic relay switch, Type R, the coil of which is controlled through the contacts of the ground /flight switch and the normally closed contacts of the inertia switch. In the event of a crash landing the inertia switch contacts open, breaking the circuit to the coil of the Type R relay which then opens its contacts, thus disconnecting all the electrical services with the exception of the fire extinguisher circuits.

18. The a.c. output from the generators is controlled by a Type EUZ voltage regulator contained in a Type 5A control panel and, as only the output from one generator is required, a choice of either can be made by use of the change-over switch fitted to the right-hand cockpit wall, adjacent to the radar control switch panel.

Fuses

19. The general services fuses are located in J.B.C., on the wing deck, on the radio switch panel, over the pedal housing, on the starboard side of the cockpit wall, on the front of the navigator's platform and in the control panel, Type 5. Their numbers, service and rating are shown on the fusebox covers, and are listed in the following table.

TABLE I *(continued)*

Circuit		Circuit Code	Fuse size (amp.)	Fuse No.
Resin lamps		GL	5	12
Air intake control		TC	5	2
Transmitter, Type F		RG	20, 5	
Control panel, Type 5			20	
A.R.I. 5610 supply	Fuse box on radio switch panel	QR	5	3, 4
A.R.I. 5685 supply		QGH	5, 10	2, 1
A.R.I. 5083 supply		QH	10	1
A.1134A supply		QE	5	55
Fuel booster pumps		BP	10	42, 43
Bombs and photoflash		B	25, 5	50, 52, 53
Multi flash heater		MFH	5	54
Camera supply		R	10	51
D.R. compass		DR	10	27
A.D.R.I.S. 15		AP, AM	5	34
Induction charge thermometer		CA	5	56
T.1. bomb sight		BS	5	41
Mk. 14 bomb sight		BS	10	41
Camera heater		CH	10	40
Camera thermometer		CT	—	—
Bombs		B	25	50
Cameras		R	10	51

Filament lamps

20. The rating and Stores Reference of the lamp filaments are shown below :—

TABLE 2

List of filament lamps

Lamps.	Stores Ref.	Voltage	Wattage
Navigation			
Port and starboard	5L/1813	24	20
Head	5L/244	24	10
Tail	5L/244	24	10

TABLE 2 (*continued*)

Lamps	Stores Ref.	Voltage	Wattage
Recognition			
Port and starboard	5L/551	24	4
Identification			
Downward	5L/50	24	80
Landing	5L/106	24	240
Bomb sight	5L/264	24	6
Cockpit floodlamp	5L/601	24	2·8
Chart table lamp	5L/264	24	6
Left and right-hand floodlamps	5L/601	24	2·8
Centre floodlamp	5L/601	24	2·8
Fuel cocks lamp	5L/601	24	2·8
Cockpit roof lamp	5L/264	24	6
Forward and rear bomb cell lamps	5L/264	24	6
Rear fuselage lamp	5L/264	24	6
Battery compartment lamp	5L/264	24	6
Compass floodlamp	5L/601	24	2·8
Controller floodlamp	5L/601	24	2·8
U.V. lamps	5L/302	12	7
Emergency lamp	5L/553	24	0·75
Generator power failure warning	5L/1428	6	0·24
Feathering switches warning lamps			
Port and starboard	5L/107	24	2·8
Undercarriage indicator lamps	5L/107	24	2·8
Immersed fuel pump warning	5L/107	24	2·8
Type F transmitter warning	5L/1928	24	2·8
Bomb door lamps	5L/1928	24	2·8
Selector, Type F, indicator lamp	5L/1428	6	2·8
Banner towing indicator lamps	5L/1928	24	2·8

Access to components

21. The positions of the main components can be ascertained from the location diagrams (*fig.* 1 *and* 2). The following table lists those components which are not easily located, or which may be difficult of access.

TABLE 3

Access to components

Component	Position and access
Starter solenoid switches	Port side of fuselage, forward of batteries (through rear entry door)
Alighting gear	
Wheel position micro switches	On undercarriage jacks and top of wheel wells (in wheel wells).
Fuel contents indicators	
Tank units (wing)	In base of fuel tanks (through tank bay doors).
Resistance units	On junction box D (through opening in bulkhead No. 3).
Flap position indicator	
Transmitter	Rear end of starboard wheel well fairing (under top rear inspection panel).
Fire extinguisher	
Delayed action switches and relays	On panel in each engine nacelle rear fairing (under top rear inspection panels).
Flame switches	On the engine bearers and firewalls.
Extinguisher bottles	On panels behind wheel wells.
Air intake	
Electro-pneumatic valves	Forward in nacelle below engine.
Voltage regulator and cut-out	On wing deck in front of draughtproof bulkhead
Fuel booster pump motor	On undercarriage fixed strut in wheel wells.
External supply socket	On port side of fuselage, between bulkheads 3 and 4.

Engine starting and propeller feathering

22. Each engine starting and propeller feathering circuit is controlled by a double-acting relay, mounted in the engine nacelle. Depressing the engine starter push-switch, mounted on the port side of the instrument panel, connects a positive supply to the coil of the master relay, which closes and completes the starter motor circuit through the normally-closed contacts of the double-acting relay.

23. Depressing the propeller feathering push-switch connects a positive supply to its holding coil and to the coil of the double-acting relay. The latter opens one set of contacts, breaking the starter motor circuit, and closes two other sets of contacts ; one set connects the feathering motor to the circuit and the other set completes the circuit to the coil of the master relay, which closes and connects a positive supply to the feathering motor. The holding coil in the

feathering push-switch remains energized until such time as the contacts operated by the hydromatic pressure switch are opened. The propellers are returned to their normal positions by again depressing the feathering switches.

24. The 2-way solenoid switches must be kept clean and free from oil and the terminal lugs must be adequately spaced in order to avoid the possibility of short-circuits occurring between them.

Ignition and booster coils

25. Booster coils, operated by push-switches (and protected by spark gap units) are connected to the magnetos on the R.H. cylinder block of each engine to maintain maximum high-tension voltage when starting.

26. The high-tension cables should be examined at the point of entrance to the booster coils and spark gap isolators to ensure that the cable ends are making good contact. The spark gap isolators should be checked for cracks in the insulated sleeve and to ensure freedom from oil or corrosion.

Fire extinguisher and fire warning

27. Six flame switches, fitted around the engine, are connected in parallel. The operation of any one completes the circuit to a relay, which has two functions :—

(1) it completes the circuit to a fire warning lamp fitted in the feathering push-switch, and

(2) it prepares a circuit for the operation of the induction fire extinguisher immediately the feathering push-switch is depressed.

In addition to operating the induction bottle, depressing the feathering push-switch causes the cartridge in the delay switch to be fired.

28. The cartridge takes 10 seconds to burn through, when the closing of a pair of contacts causes the spray bottle to be discharged. On aircraft which have a time delay switch fitted in *lieu* of the cartridge-operated switch, the pressing of the feathering push-switch causes the time delay switch only to be operated, the discharge of the extinguisher bottles being controlled by contacts which are operated by the clockwork mechanism contained in the time delay switch.

Supercharger control

29. The supercharger control consists of a change-speed switch fitted on the throttle box and connected in series with the aneroid switch. When the change-speed switch is closed, the ratio is changed from M.S. to F.S. gear, at a predetermined altitude,by the aneroid switch. A push-switch for testing the electro-pneumatic rams is mounted on the firewall, just forward of the undercarriage leg, in each engine nacelle.

Tropical air intake and hot and cold air supply

30. Double-acting pneumatic rams contained in the engine bottom cowling are controlled by solenoids to operate flaps for obtaining filtered or unfiltered air, and hot or cold air for the engine intake. A selector switch, mounted on the instrument panel centre strut, is operated automatically when the undercarriage is lowered or overridden by manual control. A change-over switch for hot or cold air is located on the left-hand side of the cockpit. For further operational information refer to Section 8 of this Volume.

Oil dilution

31. The oil dilution solenoid-operated valves are controlled by double-pole push-switches, one for each engine.

Oil and radiator thermometers

32. The indicators in these circuits are normal moving-coil instruments, designed to show the out-of-balance current in a Wheatstone bridge, the four arms of which are made up of three fixed resistances, contained within the case, and the fourth embodied in the thermometer bulb. Any variation of temperature in the fourth arm will lead to a variation in its resistance and a corresponding out-of-balance current in the indicator. The resistance change is proportional to the change of temperature ; therefore, with a particular supply voltage, the out-of-balance current will indicate a measure of the temperature.

33. Adjustment of the null point can be made by rotating the screw, located at the front of the indicator, until the pointer registers with the luminized dot on the dial.

34. Full details of description and operation are contained in A.P.1275A, Vol. 1, Sect. 4, Chap. 1. Repair of these instruments is not possible and all unserviceable items should be returned to Stores.

Fuel booster pumps

35. The fuel booster pumps are driven by electric motors ; the units are mounted on the port and starboard undercarriage fixed struts and the controlling switches are on J.B.A. The suppressors are fitted in the rear of the wheel well. If Thompson type booster pumps are fitted (mod. 894), it should be noted that the earth return is connected to the negative through a 40-amp. fuse.

36. There are a number of ways in which the pumps are wired to the electrical system, and it is essential that the modification state of the aircraft be checked before referring to the appropriate routing charts which are given in fig. 26, 27 and 28.

37. Mod. 894 introduces Thompson in-line fuel pump and the associated earth fuse for the negative supply. Amendment 3 alters the routing of the cables.

38. Mod. 1065 introduces the Plessey type in-line fuel pump into those aircraft which have not had mod. 894 embodied. Amendment 3 suspended the fitting of the pump.

39. Mod. 1228 fitted the improved type of Plessey pump to those aircraft with mod. 1065 fitted.

40. Mod. 1229 introduces the Plessey pump to those aircraft with mod. 894 embodied.

41. Mod. 1416 introduces a 20-amp. fuse in lieu of the 10-amp. fuse, together with a Type B1 suppressor and associated wiring for aircraft fitted with the Plessey pump.

Long range fuel pump

42. A functional test of the pump can be made when an ammeter is plugged into a test socket on J.B.C. The pump master switch should be left in the OFF position and the circuit closed by pressing a switch adjacent to the test socket, when the ammeter reading should not exceed 4 amp. The resistance unit for the immersed pump pressure warning lamp is bolted on the fuselage near the pump suppressor. A fuel pressure warning switch is set at $1\frac{1}{2}$ lb. per sq. in. A warning lamp, mounted on Junction Box A, lights when contacts operated by a pressure switch close owing to loss of pressure in the long-range fuel tank. The pump is not fitted when mod. 1619 and 1627 is embodied.

Pressure head heater

43. A heating element fitted in the pressure head is controlled by an on/off switch mounted on Junction Box A.

Dinghy release and wing-tank jettison

44. Two immersion switches, each containing two sets of plates, are housed in a casing which is slotted to permit water to enter. When both these switches are immersed, the electrical circuit is completed, thus causing the cartridge in the dinghy cylinder head to be fired.

45. On converted aircraft a push-switch at the left-hand side of the cockpit connects the supply (from fuse 22) of the bomb/tanks change-over switch in the bomb bay to the release sockets in each wing.

46. It is important that the two immersion switches be kept clean and free from oil, or fluid liable to cause a short-circuit, and the protecting bags surrounding the valves must not be allowed to become oil soaked. Before cleaning the immersion switches always disconnect the dinghy from the circuit. Access to the plug is through the opening in No. 3 bulkhead.

Undercarriage indicator and warning horn

47. The undercarriage indicator contains red and green lamps which light when movement of the undercarriage operates the up-lock or down-lock micro switches. The indicator lamps are controlled by the following undercarriage positions :—

DOWN AND LOCKED—green lamps alight

MOVING UP or DOWN, or UNLOCKED —red lamps alight

UP and LOCKED—all lamps extinguished

The undercarriage horn sounds when any unit of the undercarriage is not in the *DOWN* and *LOCKED* position and both engine throttle levers are set for low engine speeds.

48. All micro switches, particularly those in the wheel wells, should be checked for cleanliness, the leaf springs for freedom from corrosion and the plungers for adequacy of water-proofing and security of connections. All the servicing must be external as the micro switches must not be dismantled.

Desynn indicators and transmitters

49. The Desynn system of indication and

transmission is used in the circuits of the fuel contents gauges and flap position indicator. A resistance is connected in series with the supply to the fuel contents gauges to limit the current to a safe value.

50. The transmitter comprises a uniform circular resistance with three equally-spaced tappings. A pair of diametrically-opposed contacts, capable of rotation through 360 deg., bear on the resistance and it is through these contacts that the supply is fed into the system. The indicator consists of a 2-pole permanent-magnet rotor pivoted to rotate within a soft iron stator. The latter carries a star-connected, 3-phase distributed winding ; a three-core cable between the indicator and transmitter joins the ends of these windings to the tappings on the transmitter resistance. Thus, the direction and distribution of the current in the windings depend on the position of the contacts in the resistance, and the magnetic field produced within the stator rotates almost in synchronism with the transmitter arm throughout the 360 deg. of travel.

D.R. compass

51. In cases where D.R. compass equipment is installed reference should be made to the location diagram and the routing chart (*fig.* 1 *and* 32) for the installation of this equipment. A full description of the D.R. compass is given in A.P.1767, Vol. 1 and A.P.1275B, Vol. 1, Sect. 3, Chap. 7.

Tachometers

52. Generators, driven by flexible cables from the engine camshaft, are connected to indicators on the instrument panel. This circuit is not connected with the aircraft electrical services and operates only when the engines are running.

A.M.U. and A.P.I. (mod. 1122)

53. The Air Mileage Unit is fully described in A.P.1275B, Vol. 1, Sect. 1, Chap. 4, and the Air Position Indicator is described in Sect. 1, Chap. 5, of that Volume.

Landing lamps

54. The operation of landing lamp motors is controlled by switches, fitted on the left-hand instrument panel. The power supply is automatically connected to the lamp when it is lowered. A detailed description of the landing lamp can be found in A.P.1095A, Vol. 1, Sect. 8, Chap. 9.

Navigation lamps

55. The wing and navigation lamps are controlled by a three-position (BRIGHT, DIM, and OFF) selector switch fitted on J.B.A. The navigation head lamp may be switched on (BRIGHT only) with the wing and tail lamps, or changed over to operate with the identification lamps. The change-over switch has an OFF position and is fitted on J.B.B.

Identification lamps

56. A change-over switch for continuous or morse key operation is fitted under the coaming on the right-hand side of the fuselage, and a three-way switch to select the red, green or amber lamp is on J.B.B.

Bomb sights

57. Converted aircraft are fitted with the low-level bomb sight, Mk. 3, which is described in A.P.1275D, Vol. 1. The d.c. supply is taken from fuse 41 in J.B.C. For high-level bombing a T.1.B. sight is used. The d.c. supply is taken from a circuit breaker, the output being protected by fuses. Suppressors are included in the low-level and in the high-level bomb sight power supplies to prevent electrical interference with the radio equipment.

58. On unconverted aircraft a Mk. 14 bomb sight, which is described in A.P.1275D, is fitted. The supply is taken from fuse No. 41 J.B.C. Suppressors are included as in the case of the T.1.B. bomb sight to prevent electrical interference with the radio equipment.

Bombing—converted aircraft (mod. 1114, 1116 and 1117)

59. The d.c. supply to the nose and tail fuzing switches is taken from fuse 50 (25-amp.) and then to two 5-amp. fuses, 52 and 53. These switches are interconnected with a common fuzing switch which must be closed for non-selective fuzing. To prevent the inadvertent release of unfuzed bombs an interlock is connected across the fuzing switches, thus making it impossible to remove the firing push-switch from its holder until one of the fuzing switches has been placed in the ON position. An 8-way relay, mounted forward in the bomb bay, operates when the contacts of the bomb-door micro switches are closed on the opening of the bomb-doors. The relay contacts connect the positive supplies to the fuzing,

and release units in the fuselage and at the wing-bomb stations. A green warning lamp, mounted on the distributor panel, lights when the bomb-doors are open. The selector switch marked BOMBS/TANKS should be set to the BOMB position when bombs are carried at the wing stations. A thermostatic switch and heater element are fitted in the Type 7 distributor, the supply being taken from fuse 54. The camera heater element is controlled by a switch fitted on the right-hand side of the cockpit, the supply being taken from fuse 40.

60. For normal day bombing, all six bomb stations may be used. The firing push-switch must be inserted in the black socket at the base of the instrument panel centre strut. A Type 7 distributor is fitted and the distributor selector switch mounted on the switch panel above the selector unit must be set to No. 7. The bombs are controlled by switches 1 and 6 on a Type F selector switchbox. For a detailed description of the distributor and the selector units, reference should be made to A.P.1095B, Vol. 1, Sect. 4, Chap. 5 and 6, and Sect. 2, Chap. 4. A Type F24 camera is used for medium or high-level photography ; or a Type K24 (oblique) for low-level. The 5-pole black plug is connected to the camera. A Type 48 camera control (described in A.P.1355C, Vol. 1, Sect. 3, Chap. 3) is mounted on the right-hand side of the fuselage above the entry door, and the 5-pole, 3-pole, and 2-pole (red) sockets are connected.

61. For normal night bombing, a Type 7 distributor is fitted and the distributor selector switch is set at No. 7. The firing push-switch must be inserted in the black socket at the base of the instrument panel centre strut. When the Type F24 camera is used, the 5-pole black socket is connected to the camera gearbox. The camera control, Type 35, No. 20, is installed above the cockpit door, and the 5-pole, 3-pole, and 2-pole yellow and the 2-pole red sockets are connected. The camera control unit is described in A.P.1355C, Vol. 1, Sect. 3, Chap. 2. The bomb stations are controlled by switches 1 to 6 on the selector switchbox. If a 4·5 in. photo-flash is required, it must be fitted to No. 1 bomb station, and only five bombs may be carried. The red plug in the bomb bay must be connected to No. 1 socket. The bombs are controlled by switches 2 to 6 on the selector switchbox and the distributor should be set accordingly to obtain instantaneous release on pressing the firing push-switch. It is important to note that the 4·5 in. photo-flash is not controlled through the selector switchbox, and therefore the selector switches cannot prevent the release of the photo-flash if the firing push-switch is pressed and the bomb-doors are open.

62. When a 4,000 lb. bomb is carried, the plug at the end of the cable leading to the nose and tail fuzing units is connected to No. 1 station in the bomb-bay. No. 1 switch on the selector switchbox is used to select the bomb. This switch is surrounded by a white-painted area, of diameter 1·25 in.

63. For the release of target indicators (low-level photography with 1·5 in. multi-barrelled discharger) the Type 7 distributor is fitted. The discharger for use with one-second delay flashes, is connected by a 10-pole plug. The firing socket is inserted in the red socket at the base of the instrument panel centre strut. The distributor selector switch is set to No. 7, and an interval of 0·2 seconds is selected on the distributor. This is the only interval which may be used. The alternative cameras which can be fitted are, Types F24, K24, and F61. In all instances the red 5-pole plug is connected to the camera gearbox. When the camera, Type F24 is fitted, the external motor is connected to the camera. When the Type F24 camera is used with a Type 61 motor, the round 2-pole plug is connected to the motor. When the Type F61 camera is used, the 2-pole plug is connected to the camera magazine in addition to the 5-pole plug. Stores are selected on switches 1 to 6 and flashes on switches 9 to 14 on the selector switchbox.

64. For flare-laying, a Type 8 distributor is installed and the distributor selector switch is set to No. 8. A Type 35, No. 26, camera control is fitted to the wedge plate adjacent to the distributor and the 5-pole plug is connected. The interval for the distribution of flares is selected on the camera control. Stores are selected on switches 1 to 6 on the selector switchbox, and the firing push-switch is inserted in the black socket at the base of the instrument panel centre strut.

65. If flare-laying with night photography is required, the F24 or K24 camera is used, and the black 5-pole socket is connected to the camera gearbox. The Type 35,

No. 20, camera control is mounted on the wedge plate above the cockpit entry door; the 5-pole, 3-pole, 2-pole yellow and red sockets are connected. The first flare is to be fitted to No. 2 bomb station and the distributor must be set accordingly. Flares are controlled from selector switches 2 to 6, but the photo-flash is not controlled from the selector switchbox. The Appendix 1 of this Volume should be referred to for further description of the bombing and photographic equipment.

Bombing—unconverted aircraft

66. The supply for this circuit is taken from the fuse box on the bomb panel which is fed from J.B.J. via a ducel 7 amp. cable, and plug and socket connection J.5. Micro switches are provided on the rear face of bulkead 2, and are actuated by the forward pair of bomb door jacks causing a lamp to play on the bomb panel when the jack is fully extended. When it is desired to use wing-bombs, care should be taken to ensure that connections at the terminal blocks (mounted under the front spar) carrying the cables to the wing sockets are in order.

Camera supplies—unconverted aircraft

67. Supplies for the cameras are taken from the camera fuse box mounted on the starboard side of the fuselage on the nose. Dummy plug shells are provided at convenient points for stowage of cable connections not in use. Stowage is also available for the socket connections to camera control units when these are removed.

KEY TO FIG. 1 (LOCATION DIAGRAM—CONVERTED A/C)

POWER SUPPLIES AND DISTRIBUTION

		Zone
	D.C. supply (mod. 1128)	
1	GENERATOR, TYPE O2	B10
2	SUPPRESSOR, TYPE W2	D9
3	VOLTAGE REGULATOR, TYPE J2	inset D
4	CUT-OUT, TYPE G	inset D
5	GENERATOR FAILURE WARNING LAMP	inset B
6	RESISTANCE AND RECTIFIER UNIT	in J.B.B
7	VOLTMETER	inset B
8	TEST POINT	inset B
9	ESSENTIAL SERVICES SWITCH	inset A
10	EXTERNAL SUPPLY SOCKET	J 8
11	BATTERY, 24V, 40 AMP. HR.	H 7
12	AUXILIARY FUSEBOX IN NOSE	D13
13	GENERATOR FUSE No. 33	inset C
	D.C. supply (mod. 1428)	
14	GENERATORS, TYPE UO (2)	B10, F17
15	SUPPRESSORS, TYPE W2 (2)	D 9, G14
16	VOLTAGE REGULATORS, TYPE J2 (2)	inset D
17	CUT-OUTS, TYPE G (2)	inset D
18	GENERATOR FAILURE WARN. LAMPS (2)	inset B
19	RESISTANCE AND RECTIFIER UNITS (2)	in J.B.B
20	AMMETER SHUNTS (2)	G 8
21	RELAYS, TYPE K (GEN. ISOLATING) (2)	G 9
22	RELAY, TYPE R	J 7
	Generator test panel	
23	GROUND FLIGHT SWITCH	inset A
24	FIELD CIRCUIT BREAKERS (2)	
25	GEN. ISOLATING SWITCHES (2)	
26	VOLTS TEST SOCKETS (2)	
27	AMPS. TEST SOCKETS (2)	
28	RELAY, TYPE Q	
29	VOLTMETER	inset B
30	ESSENTIAL SERVICES SWITCH	inset A
31	EXTERNAL SUPPLY SOCKET	J 8
32	BATTERY 24V, 40 AMP. HR.	H 7
33	AUXILIARY FUSEBOX IN NOSE	D13
34	GENERATOR FUSES (2)	inset C
	A.C. supply (mod. 1128)	
35	GENERATOR, TYPE U2	F17
36	SUPPRESSOR, TYPE B1	J 5
37	CONTROL PANEL, TYPE 5	J 8
38	JUNCTION BOX, TYPE 350	H 5
	A.C. supply (mod. 1428)	
39	GENERATORS, TYPE UO (2)	B10, F17
40	A.C. CHANGE-OVER SWITCH	inset F
41	FIELD CHANGE-OVER SWITCH	inset F
42	SUPPRESSOR, TYPE B1	J 5
43	CONTROL PANEL, TYPE 5	J 8
44	JUNCTION BOX, TYPE 350	H 5

RADIO SERVICES

	Power supply switch panel (mod. 1120, 1121)	
45	ALTERNATOR SWITCH	inset F
46	ARI 5083 SWITCH	
47	ARI 5685 or ARI 5829 SWITCHES (2)	
48	ARI 5610 SWITCHES (2)	
49	FUSEBOX, 4 -WAY	
50	A1134A SWITCH (mod. 1125)	inset F
51	ARI 5131 SUPPLY SOCKET (mod. 1033)	F 9
52	TR 1934-1935 CHANGE-OVER SW.	F13
53	TR 1934-1935 RELAY, TYPE 102 (mod. 1446)	H 7
54	TR 1934-1935 RELAY, TYPE S2 (mod. 1446) (TR 1430 in lieu of TR 1143—mod. 1167, 1169)	H 7

ENGINE SERVICES

	Starting and propeller feathering	
55	STARTER MOTORS (2)	B 9
56	STARTER PUSH-SWITCHES (2)	inset A.
57	SOLENOID SWITCHES (2)	H 8
58	FEATHERING PUMP MOTORS (2)	B 8
59	FEATHERING PUSH-SWITCHES (2) (Incorporating fire warning lamps)	inset A
60	MAGNETOS (4)	B 8
61	IGNITION SWITCHES (2)	inset A
62	BOOSTER COILS (2)	D 9
63	BOOSTER COIL PUSH-SWITCHES (2)	inset A
64	TWO-WAY SOLENOID SWITCHES (2)	A 8
65	HYDRO-PRESSURE CUT-OUT SWITCHES (2)	A10
66	IGNITION CABLE PLUGS AND SOCKETS (2) (stbd MS2—port MP2)	E10
	Supercharger	
67	RAM SOLENOIDS (2)	B 9
68	ANEROID SWITCH	H 5
69	TEST PUSH-SWITCHES (2)	B 8
70	MASTER SWITCH (mod. 1068)	E13
	Oil system	
71	DILUTION PUSH-SWITCHES (2)	F12
72	DILUTION VALVES (2)	A 9
73	THERMOMETER RESISTANCE BULBS (2)	A 9
74	THERMOMETER INDICATORS (2)	inset A
75	PRESSURE INDICATORS (2)	inset A
76	PRESSURE TRANSMITTERS (2)	A10
	Miscellaneous	
77	COOLANT THERMOMETER INDICATORS (2)	inset A
78	COOLANT THERM. RESISTANCE BULBS (2)	B11
79	TACHOMETER GENERATORS (2)	C 9
80	TACHOMETER INDICATORS (2)	inset A
81	TROPICAL AIR INTAKE RAMS (2) (mod. 1063)	A 9
82	TROPICAL AIR INTAKE RELAY RESET SWITCH (mod. 1063)	inset A
83	HOT/COLD AIR SUPPLY RAMS (2) (mod. 1248)	A9
84	HOT/COLD AIR CHANGE-OVER SW. (mod. 1249)	inset A
85	INDUCTION CHARGE THERMOMETER RESISTANCE BULBS (2) (mod. 1158)	B 8
86	IND. CHARGE THERM. INDICATORS (mod. 1158)	F13

FUEL SYSTEM

	Contents gauges	
	TRANSMITTERS (6)	
87	CENTRE SECTION TANKS (1)	F 8
88	INNER TANKS (PORT AND STBD.) (2)	E 8
89	OUTER TANKS (PORT AND STBD.) (2)	J13
90	LONG RANGE TANK WHEN FITTED (1)	bomb bay
91	RESISTANCE UNITS (6)	in J.B.D
92	INDICATORS (6)	inset B
	Booster pumps	
93	PUMPS (2) (THOMPSON TYPE, mod. 894 or PLESSEY TYPE mod. 1065, 1228/9)	E 7
94	SUPPRESSORS, TYPE P1 (2) (or TYPE B1, mod. 1416 only)	E 5
95	SWITCHES (2)	inset A
96	NEGATIVE EARTH (THOMPSON TYPE) Long range pump	inset C
97	PUMP—IN REAR LONG RANGE TANK (not fitted when mod. 1619 incorp.)	bomb bay
98	SUPPRESSOR	G 7
99	SWITCH	inset A
100	PRESSURE WARNING RESISTANCE	F 7
101	PRESSURE SWITCH	F 7
102	PRESSURE WARNING LAMP	inset A
103	TEST PUSH-SWITCH	G10
104	TEST SOCKET	F10
	External tanks	
105	TANKS (2) (WHEN FITTED)	under wings
106	JETTISON UNITS SOCKETS (2)	A 2, K17
107	BOMBS/TANKS CHANGE-OVER SWITCHES (2) (mod. 1116)	F12
108	JETTISON PUSH-SWITCH	inset A

FIRE EXTINGUISHERS (POST MOD. 1107)

109	EXTINGUISHER BOTTLES (4)	C 5
110	INERTIA SWITCH	E15
111	TIME DELAY SWITCHES (2) (mod. 1398 in lieu of delayed action switches)	D 4
112	RELAYS (2)	D 4
113	PUSH-SWITCHES (2)	inset B
114	FIRE WARNING LAMPS (2) (incorp. in feathering push sws.)	inset A
115	FLAME SWITCHES (6 each engine)	A 9, B 7, B10 C 7, C 8, D 8

UNDERCARRIAGE

116	UP-LOCK MICRO SWITCHES (2)	D 6
117	DOWN-LOCK MICRO SWITCHES (2)	C 6
118	WARNING HORN ON/OFF SWITCHES (2)	E 9
119	WARNING HORN	F11
120	INDICATOR	inset A

EXTERIOR LIGHTING

121	NAVIGATION HEAD LAMP	C16
122	NAVIGATION HEAD LAMP SWITCH	inset B
123	NAVIGATION LAMPS (3) WINGS (2) TAIL (1)	wing tips tail cone
124	NAVIGATION LAMPS SWITCH	inset A
125	NAV. LAMPS DIMMING RESISTANCE	E13
126	IDENTIFICATION LAMPS (3)	J 3
127	IDENTIFICATION LAMPS SWITCHBOX	inset A
128	IDENT. LAMPS SELECTOR SWITCH	inset B
129	RESIN LAMPS (2)	wing tips
130	RESIN LAMP TAIL SOCKET	tail cone
131	RESIN LAMPS SWITCH	inset B
132	LANDING LAMPS (2)	B 3, K16
133	LANDING LAMP SWITCHES (2)	inset A
134	OUTER WING PLUGS AND SOCKETS (2) (stbd. LL2—port LL1)	B 4, K17

INTERIOR AND INSTRUMENT LIGHTING (POST MOD. 1112)

135	BATTERY COMPARTMENT LAMP	J 7
136	REAR FUSELAGE LAMP	G 5
137	REAR FUSELAGE AND BATTERY COMPT. LAMPS SWITCH (mod. 1450)	G 5
138	BOMB BAY FOR'D INSPECT. LAMP SOCKET	C12
139	BOMB BAY REAR INSPECT. LAMP SOCKET	F 7
140	COCKPIT ROOF LAMP	H11
141	CHART TABLE LAMP	inset B
142	CHART TABLE LAMP DIMMER	inset A
143	RADIO LAMP AND DIMMER (when fitted)	G10
144	D.F. LOOP LAMP AND DIMMER (when fitted)	H11
145	L.H. AND CENTRE FLOOD LAMPS	inset A
146	L.H. AND CENTRE FLOOD LAMPS DIMMER	F14
147	R.H. FLOOD LAMP	inset A
148	R.H. FLOOD LAMP DIMMER	inset A
149	FUEL COCKS OR VARIATION SETTING CORRECTOR LAMP	F11
150	FUEL COCKS OR V.S.C. LAMP DIMMER	F12
151	BOMB SIGHT LAMP	D16
152	BOMB SIGHT LAMP DIMMER	D14
153	COMPASS AND CONTROLLER LAMPS (2)	E14
154	COMPASS AND CONT. LAMPS DIMMER	F14
155	INDUCTION CHARGE THERMOMETER INDICATOR FLOOD LAMP (mod. 1158)	F13
156	INDUCTION CHARGE THERMOMETER INDICATOR FLOOD LAMP DIMMER (mod. 1158)	F13
157	U.V. LAMPS (2) (R.H. and L.H.)	inset A
158	U.V. LAMPS DIMMER	F14
159	EMERGENCY LAMP	inset A
160	EMERGENCY LAMP BATTERY	D13
161	EMERGENCY LAMP SWITCH	inset A

BOMB SIGHT (POST MOD. 1114, 1115)

162	T.1 or Mk. 3 (LOW LEVEL) SIGHTING HEAD	C15
163	T.1 and Mk. 3 SIGHTING HEAD CONTROL PANELS (2)	C15
164	T.1 SIGHT COMPUTOR	C15
165	Mk. 3 SIGHT COMPUTOR	D14
166	JUNCTION BOX	D15
167	SUPPRESSOR, TYPE P1	D15
168	ROTARY CONVERTER, TYPE 13	G 9
169	SUPPRESSOR, TYPE B No. 4	G 9
170	CIRCUIT BREAKER	E14
171	FUSEBOX, 4 WAY	E14
172	NEGATIVE FUSE 60 AMP. (mod. 1163)	inset C

BOMBS, PHOTOFLASH 4·5 in. and FLARE-LAYING (POST MOD. 1116)

	Release sockets (6)	
173	Nos. 1 and 2 (BOMBS OR FLARES) (No. 1 alternative photoflash)	F 9
174	Nos. 3 and 4 (BOMBS OR FLARES)	E10
175	Nos. 5 and 6 (BOMBS OR TANKS)	A 2, K17
176	PHOTOFLASH SOCKET (BOMB BAY PORT)	F 9
177	BOMBS AND PHOTOFLASH FIRING SOCKET (black)	D14
178	FIRING PUSH-SWITCH (also for red socket)	adjacent to sockets
	Distributor panel (repositioned in nose mod. 1423)	
179	AUTO DISTRIBUTOR, TYPE 7 (or TYPE 8, FLARE-LAYING)	inset E
180	DISTRIBUTOR SELECTOR SWITCH	
181	SELECTOR SWITCHBOX, TYPE F	
182	BOMB DOORS WARNING LAMP	
183	CIRCUIT SWITCH	
184	FUZING SWITCHES (3)—COMMON NOSE AND TAIL	
185		
186	RELAY AND RESISTANCE (flare-laying)	
187	PILOT SELECTOR SWITCHES (4) (bomb Nos. 1-4, mod. 1423)	inset A
188	FUZING INTERLOCK	D14
189	DELATCHING RELAY, TYPE B	G12
190	BOMB DOORS MICRO SWITCHES (2)	D11, D12
191	BOMB DOORS RELAY	F13
192	BOMBS/TANKS CHANGE-OVER SWS. (2)	F12
193	BOMBS FUSES Nos. 50. 52, 53	inset C

CAMERAS AMD MULTI-PHOTOFLASH 1·5 in. (POST MOD. 1116, 1117, 1164)

194	CAMERA, TYPE F24 or K24 or F61	H 5
195	CAMERA LEADS AND SOCKETS STOWAGE	J 4
196	MOTOR	H 4
197	MULTI-PHOTOFLASH DISCHARGER (repositioned in nacelle mod. 1358)	J12
198	MULTI-PHOTOFLASH FIRING SOCKET (red)	D14
199	FIRING PUSH-SWITCH (also for black socket)	adjacent to sockets
	Distributor panel (repositioned in nose mod. 1423)	
200	AUTO DISTRIBUTOR, TYPE 7 (or TYPE 8, FLARE-LAYING)	inset E
201	DISTRIBUTOR SELECTOR SWITCH	
202	SELECTOR SWITCHBOX, TYPE F	
203	CIRCUIT SWITCH	
204	RELAY AND RESISTANCE (MULTI-PHOTOFLASH)	
205	CONTROL, TYPE 35, No. 20 (NIGHT) or TYPE 48 (DAY)	D13
206	CONTROL, TYPE 35, No. 26 (flare-laying only)	C13
207	CAMERA RELAY, TYPE B	G11
208	SUPPRESSOR, TYPE P1 (CAMERA TYPE F61 MOTOR)	G 4
209	CAMERA FUSE No. 51	inset C
210	CAMERA HEATER SOCKET	H 4
211	CAMERA HEATER SWITCH	C13
212	DISTRIBUTOR HEATER	Distributor panel
213	MULTI-FLASH HEATER LEAD SOCKET	
214	DISTRIBUTOR AND MULTIPHOTO-FLASH HEATERS SWITCH	

D.R. COMPASS

215	MASTER COMPASS, Mk. 1	K 5
216	REPEATER AND INDICATOR HEADING	inset A
217	VARIATION SETTING CORRECTOR	E12
218	CONTROL UNIT, TYPE D	inset A
219	COMPASS JUNCTION BOX	K 6
220	SUPPRESSOR, TYPE B1	J 6
221	DISTRIBUTOR, TYPE D	J 7
222	JUNCTION BOX, TYPE A or B	J 7
223	JUNCTION BOX, 5 WAY, TYPE A	J 7
224	JUNCTION BOX, 3 WAY, TYPE A	H-G11

BANNER TOWING (MOD. 1619, 1627)

225	BOMB DOORS MICRO SWITCHES (2)	D11, D12
226	TARGET MICRO SWITCHES (3) BANNER TOWING CONTROL PANEL	on container
227	BOMB DOORS INDICATOR LAMP	G12
228	TARGET INDICATOR LAMPS (3)	G12

A.D.R.I.S. (MOD. 1122, 1123)

229	AIR POSITION INDICATOR	H11
230	CONTROL UNIT, TYPE 522	under A.P.I.
231	REPEATER MOTOR	
232	A.P.I. SWITCH	G12
233	WIND FINDING ATTACHMENT SOCKET	inset B
234	SUPPRESSOR, TYPE P	G11
235	JUNCTION BOX, 3 WAY, TYPE A	H-G11
236	AIR MILEAGE UNIT	J 6
237	A.M.U. TRANSMITTER	J 6
238	SUPPRESSOR, TYPE P	H 6

MISCELLANEOUS

239	FLAP POSITION INDICATOR	inset A
240	FLAP POSITION TRANSMITTER	E 5
241	DINGHY RELEASE IMMERSION SWITCHES (2) (second switch mod. 1052)	D12 D14
242	DINGHY STOWAGE RELEASE SOCKET (3-pole socket mod. 999)	G 8
243	PRESSURE HEAD HEATER	fin
244	PRESSURE HEAD HEATER SWITCH	inset A
245	WING ROOT PLUGS AND SOCKETS (2) (stbd P3—port P2)	E10

TERMINAL BLOCKS

Cct.	Zone	Cct.	Zone
1 GD	in J.B.B	63 SA-SD	H 9
2 GD	in J.B.B	64 M, UV	F14
3 SA-SD	in J.B.A	65 B, R	G 8
4 GD	in J.B.A	66 B, QE	E15
5 N	D15	67 B, R	E15
6 GD	E14	68 B	inset E
7 GD	F14	69 B	inset E
8 GD	F13	70 B, R	D15
9 GD	in J.B.J	71 B, R	D15
10 M	in J.B.J	72 QR	G 6
11 GD	in J.B.C	73 B	E13
12 GD	in J.B.C	74 B	E13
13 GD	in J.B.C	75 B	E13
14 FA-FD	in J.B.C	76 B	E13
15 FD	F11	77 B	E13
16 FA	G12	78 B, BT	D11
17 MM	F11	79 (PORT)	as T.B.78
18 MM, PS	F11	80 R	G 8
19 MM, Y	D11	81 R	inset E
20 M	H 7	82 R	inset E
21 GD	inset D	83 R	inset E
22 GD	inset D	84 R	J 4
23 GD	inset D	85 R	J 4
29 QG	in J.B.D	86 R	H 4
30 DR	in J.B.D	87 R	H 4
31 GD	in J.B.D	88 TC (or 140)	D14
32 GD	H 8	89 BS	E15
33 Y	G 8	90 BS	D15
34 Y	D11	91 QE	G12
35 Y	D11	92 (PORT)	as T.B 103
36 Y	D11	93 QR	inset F
37 Y, B	F12	94 QGH	inset F
38 Y, B	F12	95 WA, WD	A 8
39 U	F10	96 (PORT)	as T.B.95
40 UZ	F10	97 S	D 6
41 U	G11	98 S	F 9
42 UZ	G11	99 S	F 8
43 U	J12	100 S	G 8
44 U	J12	101 (PORT)	as T.B.98
45 U	E 5	102 S	H13
46 U	E 5	103 BC	B10
47 FA-FD	C 4	104 BP	G 7
48 (PORT)	as T.B.47	107 TC	H15
49 FA-FD	E 6	108 TC	C 8
50 FA-FD	J13	109 QG	H 7
51 BP	E 6	136 CA	H15
52 BP	J13	137 (PORT)	as T.B.139
53 J	G 7	138 CA	D 9
54 J	G 7	139 CA	E11
55 GL	wing tip	140 TC (or 88)	D14
56 N	wing tip	141 TC	F10
57 N	wing tip	146 GA	G13
58 GL	wing tip	147 GA	G13
59 GL, N	tail cone	148 GD	inset A
60 P	tail cone	149 GD	H 9
61 P	fin	150 BT	container
62 BC	G 6		

JUNCTION BOXES

J.B.	Zone	J.B.	Zone
A	E13	F	D 7
B	E12	FB	D 3
C	F10	G	G10
D	G 8	J	E15
E	H14	P	E14
EB	H15		

KEY TO FIG. 2 (LOCATION DIAGRAM—UNCONVERTED A/C)

		Zone
	POWER SUPPLY AND DISTRIBUTION (MOD. 1601)	
1	GENERATORS, TYPE HX2 (2)	B10, F17
2	SUPPRESSORS, TYPE Y1 (2)	D 9, G14
3	VOLTAGE REGULATORS AND CUT-OUTS TYPE A2 (2)	inset D
4	FIELD SWITCHES (2)	inset B
5	GENERATOR FAILURE WARN. LAMPS (2)	inset B
6	RESISTANCE AND RECT. UNITS (2)	in J.B.B
7	VOLTMETER	inset B
8	TEST POINT	inset B
9	ESSENTIAL SERVICES SWITCH	inset A
10	EXTERNAL SUPPLY SOCKET	J 8
11	BATTERY, 24V, 40 AMP. Hr.	H 8
12	AUXILIARY FUSEBOX IN NOSE	D13
13	GENERATOR FUSES (2)	J.B.G
	ENGINE SERVICES	
	Starting and propeller feathering	
14	STARTER MOTORS (2)	B 9
15	STARTER PUSH-SWITCHES (2)	inset A
16	SOLENOID SWITCHES (2)	H 8
17	FEATHERING PUMP MOTORS (2)	B 8
18	FEATHERING PUSH SWITCHES (2) (incorporating fire warning lamps)	inset A
19	MAGNETOS (4)	B 8
20	IGNITION SWITCHES (2)	inset A
21	BOOSTER COILS (2)	D 9
22	BOOSTER COIL PUSH-SWITCHES (2)	inset A
23	TWO-WAY SOLENOID SWITCHES (2)	A 8
24	HYDRO-PRESSURE CUT-OUT SWITCHES (2)	A10
25	IGNITION CABLE PLUGS AND SOCKETS (2) (stbd MS2—port MP2)	E10
	Supercharger	
26	RAM SOLENOIDS (2)	B 9
27	ANEROID SWITCH	H 5
28	TEST PUSH-SWITCHES (2)	B 8
29	MASTER SWITCH (mod. 1068)	E13
	Oil system	
30	DILUTION PUSH-SWITCHES (2)	F12
31	DILUTION VALVES (2)	A 9
32	THERMOMETER RESISTANCE BULBS (2)	A 9
33	THERMOMETER INDICATORS (2)	inset A
34	PRESSURE INDICATORS (2)	inset A
35	PRESSURE TRANSMITTERS (2)	A10
	Miscellaneous	
36	COOLANT THERMOMETER INDICATORS (2)	inset A
37	COOLANT THERM. RESISTANCE BULBS (2)	B11
38	TACHOMETER GENERATORS (2)	C 9
39	TACHOMETER INDICATORS (2)	inset A
40	TROPICAL AIR INTAKE RAM (2)	A 9
41	TROPICAL AIR INTAKE RELAY RESET SWITCH (mod. 1063)	inset A
42	HOT/COLD AIR SUPPLY RAMS (2) (mod. 1248)	A 9
43	HOT/COLD AIR CHANGE-OVER SW. (mod. 1249)	inset A
	FUEL SYSTEM	
	Contents gauges	
	TRANSMITTERS (6)	
44	CENTRE SECTION TANKS (1)	F 8
45	INNER TANKS (PORT AND STBD) (2)	E 8
46	OUTER TANKS (PORT AND STBD) (2)	J13
47	LONG RANGE TANK WHEN FITTED (1)	bomb bay
48	RESISTANCE UNITS (6)	in J.B.D
49	INDICATORS (6)	inset B
	PRESSURE (pre mod. 1243)	
50	RESISTANCE UNITS (2)	C 8
51	SWITCHES (2)	B 9
52	WARNING LAMPS (2)	inset A
	Booster pumps	
53	PUMPS (2) (THOMPSON TYPE, mod. 894 or PLESSEY TYPE, mod. 1065, 1228/9)	E 7
54	SUPPRESSORS, TYPE P1 (2) (or TYPE B1, mod. 1416 only)	E 5
55	SWITCHES (2)	inset A
56	NEGATIVE EARTH (THOMPSON TYPE) LONG RANGE PUMP	F11
57	PUMP—in rear long range tank (not fitted when mod. 1619 incorp.)	bomb bay
58	SUPPRESSOR	G 7
59	SWITCH	inset A
60	PRESSURE WARNING RESISTANCE	F 6
61	PRESSURE SWITCH	F 7
62	PRESSURE WARNING LAMP	inset A
63	TEST PUSH-SWITCH	G10
64	TEST SOCKET	F 10
	External tanks	
65	TANKS (2) (WHEN FITTED)	under wings
66	JETTISON UNITS SOCKETS (2)	B 2, K17
67	JETTISON PUSH-SWITCH	inset A
	FIRE EXTINGUISHERS (POST MOD. 1107)	
68	EXTINGUISHER BOTTLES (4)	C 5
69	INERTIA SWITCH	E15
70	TIME DELAY SWITCHES (2) (mod 1398 in lieu of delayed action switches)	D 4
71	RELAYS (2)	D 4
72	PUSH-SWITCHES (2)	inset B
73	FIRE WARNING LAMPS (2) (incorp. in feathering push sws.)	inset A
74	FLAME SWITCHES (6 each engine)	A 9, B 7, B10 C 7, C 8, D 8
	UNDERCARRIAGE	
75	UP LOCK MICRO SWITCHES (2)	D 6
76	DOWN LOCK MICRO SWITCHES (2)	C 6
77	WARNING HORN ON/OFF SWITCHES (2)	E 9
78	WARNING HORN	F11
79	INDICATOR	inset A
	EXTERIOR LIGHTING	
80	NAVIGATION HEAD LAMP	C16
81	NAVIGATION HEAD LAMP SWITCH	inset B
82	NAVIGATION LAMPS (3) WINGS (2) TAIL (1)	wing tips tail cone
83	NAVIGATION LAMPS SWITCH	inset A
84	NAV. LAMPS DIMMING RESISTANCE	E13
85	IDENTIFICATION LAMPS (3)	J 3
86	IDENTIFICATION LAMPS SWITCHBOX	inset A
87	IDENT. LAMPS SELECTOR SWITCH	inset B
88	RESIN LAMPS (2)	wing tips
89	RESIN LAMP TAIL SOCKET	tail cone
90	RESIN LAMPS SWITCH	inset B
91	LANDING LAMPS (2)	B 3, K16
92	LANDING LAMPS SWITCHES (2)	inset A
93	OUTER WING PLUGS AND SOCKETS (2) (stbd LL2—port LL1)	B 4, K17
	INTERIOR AND INSTRUMENT LIGHTING (PRE MOD. 1112)	
94	BATTERY COMPARTMENT LAMP	J 7
95	REAR FUSELAGE LAMP	G 5
96	BOMB BAY FOR'D INSPECT. LAMP SOCKET	C12
97	BOMB BAY REAR INSPECT. LAMP SOCKET	F 7
98	COCKPIT ROOF LAMP	H11
99	CHART TABLE LAMP	inset B
100	CHART TABLE LAMP DIMMER	inset A
101	RADIO LAMP AND DIMMER (when fitted)	G10
102	D.F. LOOP LAMP AND DIMMER (when fitted)	H11
103	L.H. FLOOD LAMP	inset A
104	L.H. FLOOD LAMP DIMMER	inset A
105	R.H. FLOOD LAMP	inset A
106	R.H. FLOOD LAMP DIMMER	inset A
107	FUEL COCKS OR VARIATION SETTING CORRECTOR LAMP	F11
108	FUEL COCKS OR V.S.C. LAMP DIMMER	F12
109	BOMB SIGHT LAMP	D15
110	BOMB SIGHT LAMP DIMMER	D14
111	COMPASS LAMP	E14
112	COMPASS LAMP DIMMER	E14
113	VISUAL INDICATOR LAMP AND DIMMER (when fitted)	inset A
	BOMB SIGHT (PRE MOD. 1114, 1115)	
114	Mk. 14 SIGHTING HEAD	C15
115	Mk. 14 SIGHT COMPUTOR	H 7
116	SWITCH (CONTROL PANEL)	G12
117	SUPPRESSOR, TYPE P	G 7
118	SWITCHBOX	D15
119	JUNCTION BOX, TYPE A or B	J 7
	BOMBS (PRE MOD. 1116)	
	RELEASE SOCKETS (6)	
120	Nos. 1 and 2 (FUSELAGE)	F 9
121	Nos. 3 and 4 (FUSELAGE)	E10
122	Nos. 5 and 6 (BOMBS OR TANKS)	B 2, K17
	FIRING PUSH-SWITCHES (2)	
123	PILOT (BOMBS AND CAMERAS)	control col.
124	BOMB AIMER (BOMBS AND CAMERAS)	inset E
	DISTRIBUTOR PANEL	
125	AUTO DISTRIBUTOR, TYPE 6	inset E
126	SELECTOR SWITCHBOX, TYPE F	
127	BOMB DOORS WARNING LAMP	
128	FLOOD LAMP AND DIMMER	
129	FUSEBOX (5 fuses)	
130	FUZING SWITCHES (2) NOSE TAIL	
131	JETTISON SWITCH, TYPE H	inset A
132	BOMB DOORS MICRO SWITCHES (2)	D11, D12
	CAMERAS (PRE MOD. 1116, 1117)	
133	CAMERA (REAR) TYPE F24 or F8	H5
134	MOTOR	H4
135	CONTROL, TYPE 35	C13
	PUSH-SWITCHES (2)	
136	PILOT (BOMBS AND CAMERAS)	control col.
137	NAVIGATOR (BOMBS AND CAMERAS)	inset E

Note.—Items 138-145 shown in diagram are wired for but not installed in bomber a/c Sockets.

	SOCKETS	
138	FRONT CAMERAS LEADS (2) (port and stbd)	forward bomb bay
139	REAR, OBLIQUE AND FORWARD CAMERAS LEADS (3)	rear fuselage
	CONTROL PANEL	
140	CONTROL, TYPE 35 (forward and rear cameras)	inset E
141	DISTRIBUTION BOX, TYPE 48 (forward and rear cameras)	
142	CONTROL, TYPE 35 (front and oblique cameras)	
143	DISTRIBUTION BOX TYPE 48 (front and oblique cameras)	
144	SINGLE EXPOSURE COUNTER AND PUSH-SWITCH	D13
145	SINGLE EXPOSURE PUSH-SWITCH SOCKETS (2)	adjacent to switch
	Heaters and thermometers (pre mod. 1164)	
	CAMERA FUSE PANEL	
146	HEATERS SWITCH	inset C
147	THERMOMETERS SWITCH	
148	THERM. INDICATORS (2)	
149	CAMERA FUSES (7)	
150	HEATER AND THERM. FUSES (2)	
	HEATER SOCKETS	
151	FRONT CAMERAS (2)	fwd. bomb bay
152	REAR FUSELAGE CAMERAS (3)	H 4
153	THERMOMETERS (2)—BOMB BAY	rear blkd. 2
154	REAR FUSELAGE	J 4
	D.R. COMPASS	
155	MASTER COMPASS, Mk. 1	K 5
156	REPEATER AND INDICATOR HEADING	inset A
157	VARIATION SETTING CORRECTOR	E12
158	CONTROL UNIT, TYPE D	inset A
159	COMPASS JUNCTION BOX	K 6
160	SUPPRESSOR, TYPE B1	J 6
161	DISTRIBUTOR, TYPE D	J 7
162	JUNCTION BOX, TYPE A or B	J 7
163	JUNCTION BOX, 5-WAY, TYPE A	J 7
164	JUNCTION BOX, 3 WAY, TYPE A	H-G11
	BANNER TOWING (MOD. 1619, 1627)	
165	BOMB DOORS MICRO SWITCHES (2)	D11, D12
166	TARGET MICRO SWITCHES (3)	target container
	BANNER TOWING CONTROL PANEL	
167	BOMB DOORS INDICATOR LAMP	G12
168	TARGET INDICATOR LAMPS (3)	G12
	MISCELLANEOUS	
169	FLAP POSITION INDICATOR	inset A
170	FLAP POSITION TRANSMITTER	E 5
171	DINGHY RELEASE IMMERSION SWS. (2) (second switch mod. 1052)	D12 D14
172	DINGHY STOWAGE RELEASE SOCKET (3 pin socket mod. 999)	G 8
173	PRESSURE HEAD HEATER	fin
174	PRESSURE HEAD HEATER SWITCH	inset A
175	WING ROOT PLUGS AND SOCKETS (2) (stbd P3—port P2)	E10
176	AIR THERM. INDICATOR (pre-mod 1245)	inset A
177	AIR THERM. RESISTANCE BULB (pre-mod 1245)	C13
	TRANSMITTER, TYPE F (PRE MOD. 1617)	
178	FLASHER UNIT	D12
179	R.G. LAMP	tail
180	SWITCH AND WARNING LAMP	inset B
181	FUSEBOX (2 fuses)	D12

TERMINAL BLOCKS

Cct.	Zone	Cct.	Zone
1 GD	in J.B.B	75B	E13
2 GD	in J.B.B	76 B	E13
3 SA-SD	in J.B.A	77 B	E13
4 GD	in J.B.A	78 B, BT	D11
5 N	D15	79 (PORT)	as T.B.78
6 GD	E14	88 TC (or 140)	D14
7 GD	F14	92 (PORT)	as T.B.103
8 GD	F13	95 WA, WD	A 8
9 GD	in J.B.J	96 (PORT)	as T.B.95
10 M	in J.B.J.	97 S	D 6
11 GD	in J.B.C	98 S	F 9
13 GD	in J.B.C	99 S	F 8
14 FA-FD	in J.B.C	100 S	G 8
15 FD	F11	101 (PORT)	as T.B.98
16 FA	G12	102 S	H13
17 MM	F11	103 BC	B10
18 MM	F11	104 BP	G 7
19 MM	D11	105 R	inset E
20 M	G 7	106 R	inset E
22 GD	inset D	107 TC	H15
24 RG	D12	108 TC	C 8
25 RG	D12	110 BS	G12
26 RG	D12	111 BS	G 7
27 RG	tail cone	112 BS	D15
28 RG	tail cone	113 CT	inset C
29 QG	in J.B.D	114 CT	inset C
30 DR	in J.B.D	115 CT	in J.B.C
31 GD	in J.B.D	116 CH, R	E12
32 GD	H 8	117 CH	H 4
33 Y	G 8	118 R	E12
34 Y	F12	119 R	E12
35 Y	D11	120 (PORT)	as T.B.118
36 Y	D11	121 (PORT)	as T.B.119
37 Y, B	F12	122 R	inset E
38 Y, B	F12	123 R	inset E
39 U	F10	124 R	inset E
40 UZ	F10	125 R	inset C
41 U	G11	126 R	inset E
42 UZ	G11	127 R	inset E
43 U	J12	128 R	G 6
44 U	J12	129 R	G 6
45 U	E 5	130 R	G 6
46 U	E 5	131 R	G 6
47 FA, FD	C 4	132 R	H 4
48 (PORT)	as T.B.47	133 R	inset C
49 FA-FD	E 6	134 R	inset C
50 FA-FD	J13	140 TC (or 88)	D14
51 BP	E 6	141 TC	F10
52 BP	J13	142 CT	fwd. bomb bay
53 J	G 7	143 AT	in J.B.A
54 J	G 7	144 CT	H 4
55 GL	wing tip	145 FA	E11
56 N	wing tip	150 BT	container
57 N	wing tip	152 GA-GD	inset D
58 GL	wing tip	153 B (GD)	inset E
59 GL, N	tail cone	154 B	D14
60 P	tail cone	155 B	inset E
61 P	fin	156 B	C13
62 BC	H 6	157 B	control
63 SA-SD	G 9	158 B	coil base
74 B	E13		

JUNCTION BOXES

J.B.	Zone	J.B.	Zone
A	E13	F	D 7
B	E12	FB	D 9
C	F10	G	G10
D	G 8	J	E14
E	H14	P	E14
EB	H15		

RESTRICTED

7922 59612 12/53 450 C.B.&S.Ltd. Gp.30

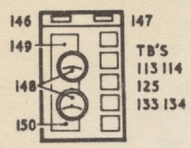

CAMERA FUSE PANEL

(C)

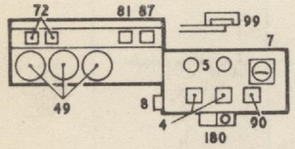

(B)

J.B.B CONTAINING RECTIFIERS

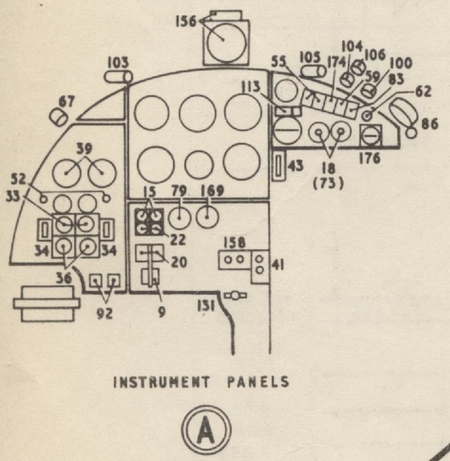

INSTRUMENT PANELS

(A)

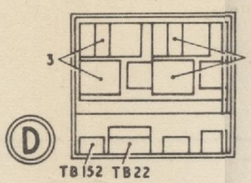

(D)

J.B.G CONTAINING VOLTAGE REGULATOR PANEL

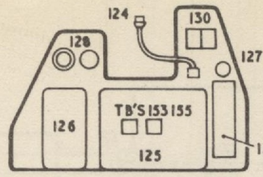

DISTRIBUTOR PANEL
(BOMBER A/C)

(E)

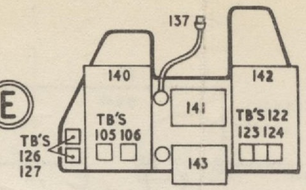

CAMERA CONTROL PANEL
(ALTERNATIVE)

NOTE: ITEMS LOCATED BEHIND BULKHEADS ETC. ARE DRAWN IN OUTLINE ONLY

TERMINAL BLOCKS: PORT COUNTERPART NUMBERS ARE GIVEN IN BRACKETS

Fig.2. Location diagram – unconverted A/C

7923 59613 11/53 480 C.B.&S.LTD. GP.55.

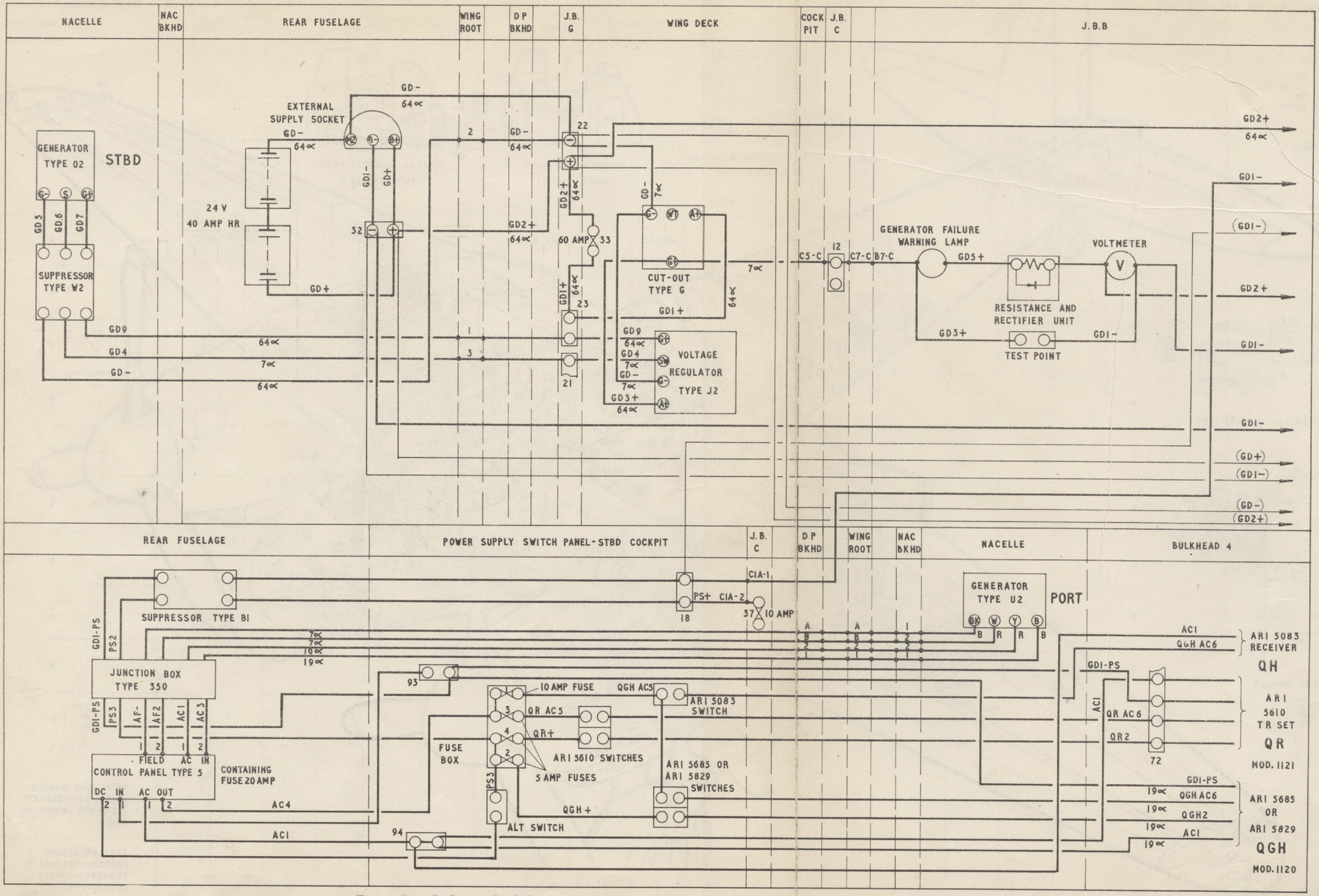

Fig. 3. D.C. and A.C. power supplies and distribution - 02 and U2 (mod. 1128)

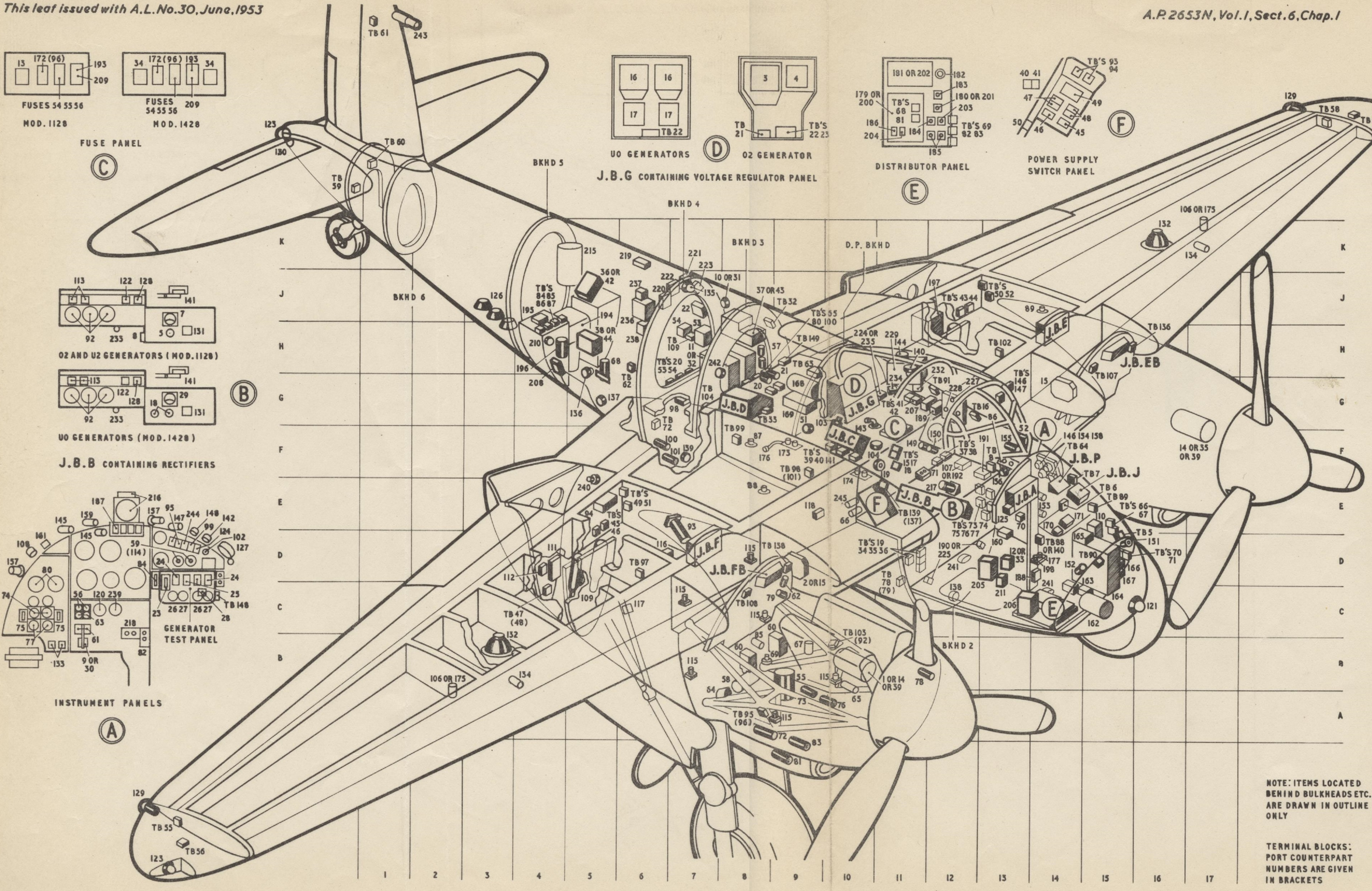

Fig. 1. Location diagram – converted A/C

RESTRICTED

7923 39613 11/53 450 C.B.&S.LTD. GP.55.

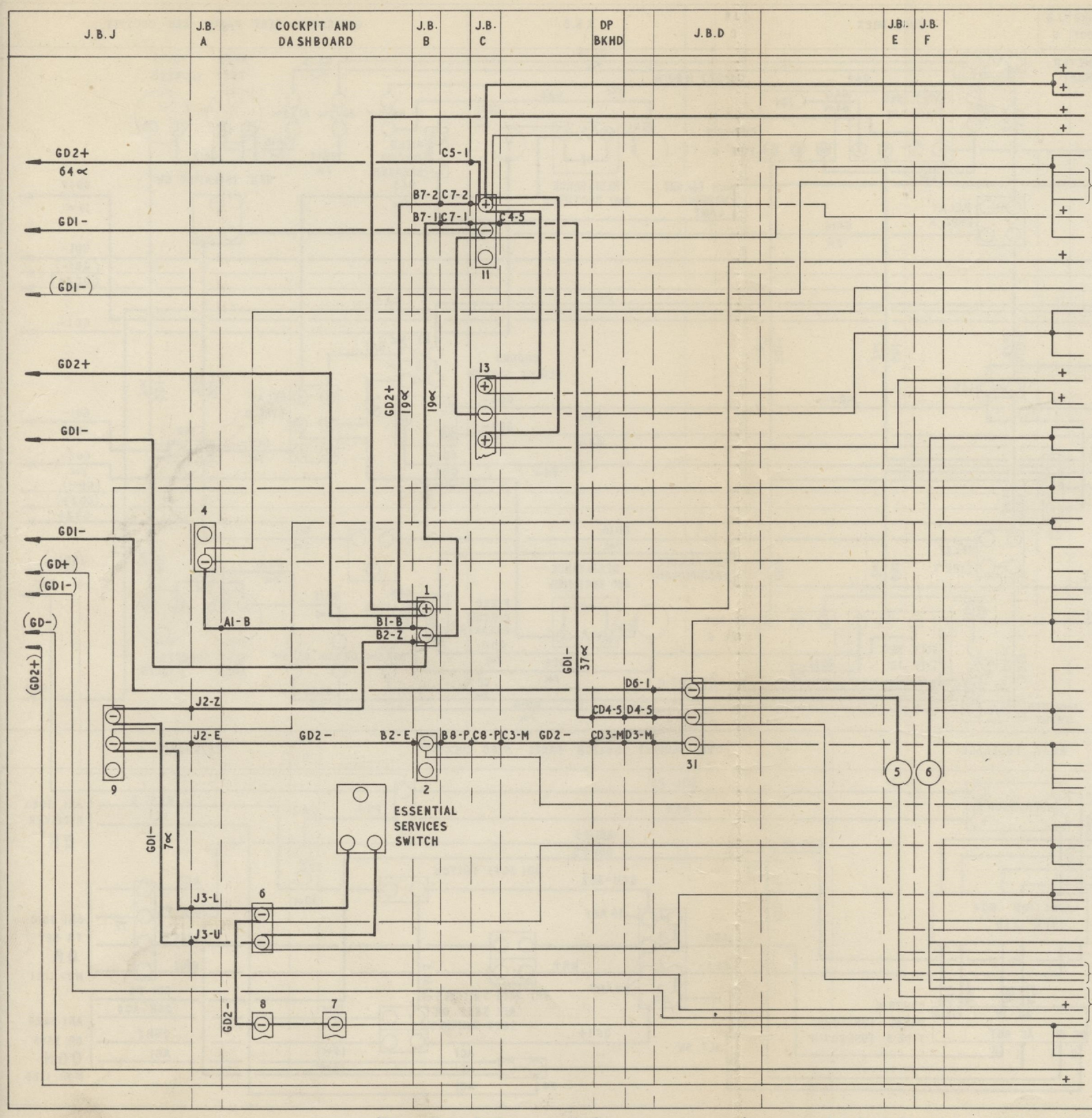

CIRCUIT		FIG
FUSES 1-4. 6-16. 19. 20. 22-24. 27. 28	NOTE: ALL CIRCUITS (EXCEPT TACHOMETERS) AND FUSE NUMBERS ARE GIVEN IN THIS DIAGRAM	
FUSES 30-32. 34-41		
AUX. FUSE BOX IN NOSE 42-45. 47		
T.I. BOMB SIGHT (4 FUSES IN FUSE BOX)		36
A.R.I. 5131 (I.F.F.)		
INTERIOR LIGHTING / DINGHY RELEASE AND EXTERNAL FUEL TANK JETTISON		18,19,14
PUMP TEST SOCKET (FUSE 18) / FUEL PUMP / FUEL PUMP SWITCH (FUSE 17) / PRESSURE WARNING LAMP	LONG RANGE FUEL PUMP AND PRESSURE WARNING	14
MULTIPHOTOFLASH HEATER		35
CAMERAS, A1134 A		34
BOMBS, PHOTOFLASH 4·5 IN. MULTIPHOTOFLASH 1·5 IN.		33,35
BOMBS, PHOTOFLASH, CAMERAS, MULTIFLASH (FUSES 50, 51, 52, 53)		33,34,35
MULTIFLASH H'TR., A1134A, IND. CHARGE THERM. (FUSES 54, 55, 56)		35 30
FIRE WARNING LAMPS / NAVIGATION HEADLAMP	(FUSE BOXES ON WING DECK)	11 / 20
T.I.B. BOMBSIGHT		36
INSTRUMENT LIGHTING		17
FUEL PRESSURE WARNING LAMPS (PRE MOD. 1243)		
A.D.R.I.S. (AIR MILEAGE UNIT - AIR POSITION INDICATOR)		36
T.R. 1430 OR T.R. 1934-1935		
FUEL BOOSTER PUMPS		26,27,28
OIL DILUTION		12
DR COMPASS		32
IDENTIFICATION LAMPS		21
INTERIOR LIGHTING (EMERGENCY LAMP)		18,19
PRESSURE HEAD HEATER		19
CAMERA HEATER		34
FUEL CONTENTS INDICATORS		9
FLAP POSITION INDICATOR		15
UNDERCARRIAGE INDICATOR		8
AIR THERMOMETER (PRE MOD. 1245)		
TROPICAL AIR INTAKE AND HOT AND COLD AIR SUPPLY		23,24,25
OIL THERMOMETER AND COOLANT THERMOMETER		13
OIL PRESSURE		31
IGNITION AND BOOSTER COILS	+VE FEEDS ONLY HAVE BEEN MARKED REMAINDER ARE ALL -VE	7
ENGINE STARTER PUSH-SWITCHES		6
FIRE EXTINGUISHER AND FIRE WARNING		11
LANDING LAMPS		15
NAVIGATION LAMPS AND RESIN LAMPS		20,22
ENGINE STARTING AND PROPELLOR FEATHERING		6
SUPERCHARGER CONTROL (POST MOD. 1068 AND 1163)		12
INDUCTION CHARGE THERMOMETER		30
TRANSMITTER TYPE F (PRE MOD. 1617)		

Fig. 3. D.C. and A.C. power supplies and distribution - 02 and U2 (mod. 1128)

7923 59613 11/53 450 C.B.&S.LTD. GP.95.

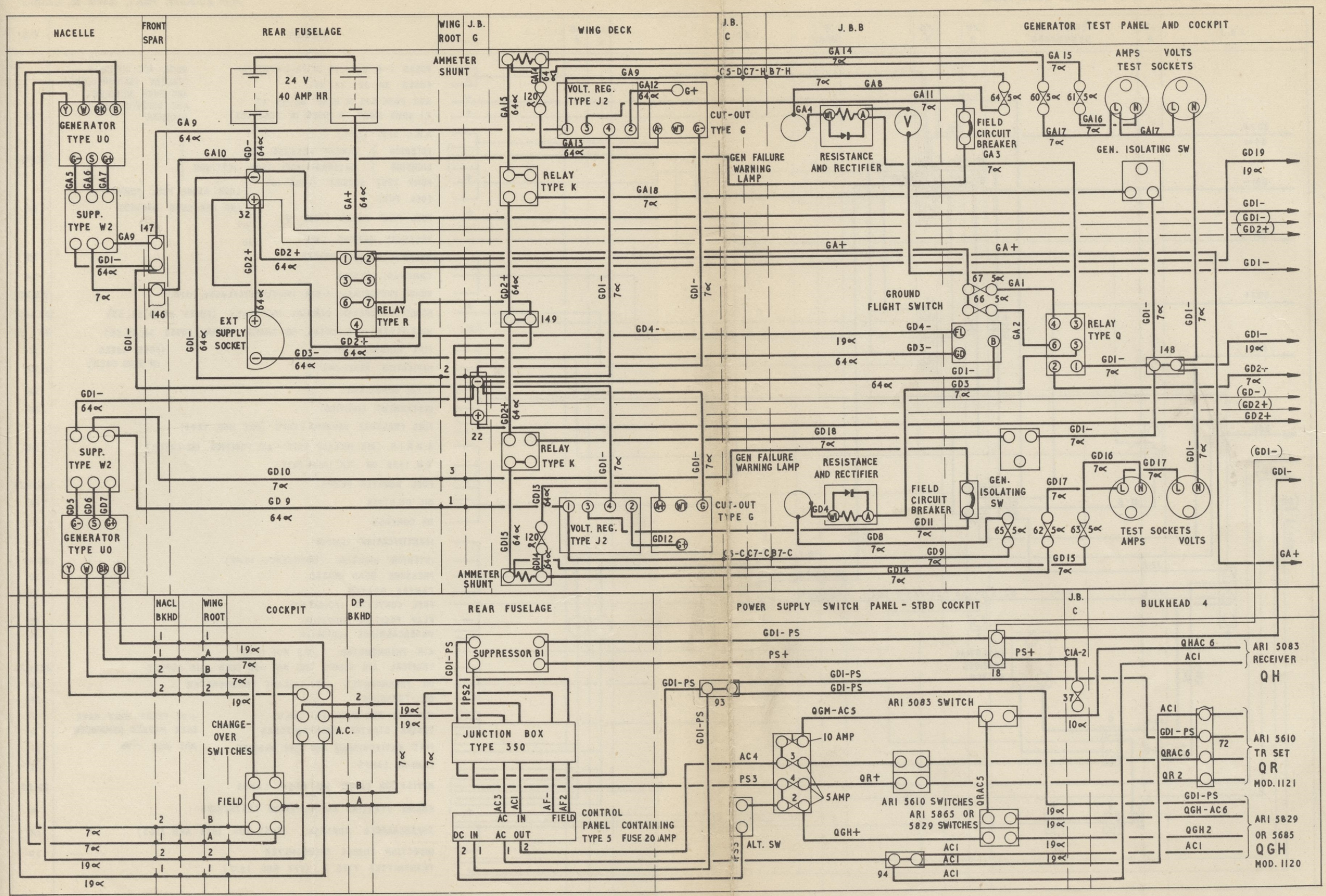

Fig. 4. D.C. and A.C. power supplies and distribution - twin UO (mod. 1428)

J.B.J | J.B.A | COCKPIT AND DASHBOARD | J.B.B | J.B.C | D.P. BKHD | J.B.D | J.B.E | J.B.F

GD2+
GD19
19∝
64∝
GD1−
(GD1−)
(GD2+)
GD1−
37∝
GD1−
19∝
GD2+
A1-1
(GD−)
(GD2+)
GD2+
4
(GD1−)
GD1−
A1-B
GD1−
GD2+
B7-2
1
B1-1
B1-B
B2-Z
GD1−
37∝
C5-1
C7-2
B7-1
C7-1
C1A-1
C4-5
=
GD2+
GD2+
GD1−
13
GD2+
GA+
J2-Z
GD1−
D6-1
CD4-5
D4-5
J2-E
GD2−
B2-E
B3-P
C8-P
C3-M
GD2−
CD3-M
D3-M
31
9
2
ESSENTIAL SERVICES SWITCH
5
6
GD2−
J3-L
6
GD2−
J3-U
GD1−
GD2−
GA+
38
20∝
39
20∝
8
7

CIRCUIT	FIG
FUSES 1-4, 6-16, 19, 20, 22-25, 27, 28 — NOTE: ALL CIRCUITS (EXCEPT TACHOMETERS) AND FUSE NUMBERS ARE GIVEN IN THIS DIAGRAM	
FUSES 30-32, 34-36, 40, 41	
AUX. FUSE BOX IN NOSE 42-45, 47	
AUX. FUSE BOX IN NOSE 46	
T.I. BOMB SIGHT (4 FUSES IN FUSEBOX)	36
A.R.I. 5131 (I.F.F.)	
INTERIOR LIGHTING — DINGHY RELEASE AND EXTERNAL FUEL TANK JETTISON	18, 19, 14
PUMP TEST SOCKET (FUSE 18)	
FUEL PUMP	
FUEL PUMP SWITCH (FUSE 17) — LONG RANGE FUEL PUMP AND PRESSURE WARNING	14
PRESSURE WARNING LAMP	
BANNER TOWING	29
BOMBS, PHOTOFLASH 4·5 IN., CAMERAS MULTIPHOTOFLASH 1·5 IN.	33, 34, 35
A1134 A. MULTIPHOTOFLASH HEATER	35
MULTI FLASH H'TR, A1134A, IND. CHARGE THERM. (FUSES 54, 55, 56)	35 30
BOMBS, PHOTOFLASH, CAMERAS, MULTIFLASH (FUSES 50, 51, 52, 53)	33, 34, 35
FIRE WARNING LAMPS (FUSE BOXES ON WING DECK)	11
NAVIGATION HEADLAMP	20
T.I.B. BOMB SIGHT	36
INSTRUMENT LIGHTING	17
FUEL PRESSURE WARNING LAMPS (PRE MOD. 1243)	
A.D.R.I.S. (AIR MILEAGE UNIT - AIR POSITION INDICATOR)	36
T.R. 1430 OR T.R. 1934 AND T.R. 1935	
FUEL BOOSTER PUMPS	26, 27, 28
OIL DILUTION	12
D.R. COMPASS	32
IDENTIFICATION LAMPS	21
INTERIOR LIGHTING (EMERGENCY LAMP)	18, 19
PRESSURE HEAD HEATER	19
CAMERA HEATER	34
FUEL CONTENTS INDICATORS	9
FLAP POSITION INDICATOR	15
UNDERCARRIAGE INDICATOR	8
AIR THERMOMETER (PRE MOD. 1245)	
TROPICAL AIR INTAKE AND HOT AND COLD AIR SUPPLY	23, 24, 25
OIL THERMOMETER AND COOLANT THERMOMETER	13
OIL PRESSURE	31
IGNITION AND BOOSTER COILS	7
STARTER PUSH SWITCHES, ENGINE STARTING AND PROPELLER FEATHERING — [+VE FEEDS ONLY HAVE BEEN MARKED REMAINDER ARE ALL −VE]	6
LANDING LAMPS	15
NAVIGATION AND RESIN LAMPS	20, 22
FIRE EXTINGUISHER AND FIRE WARNING	11
SUPERCHARGER CONTROL (POST MOD. 1068 AND 1163)	12
INDUCTION CHARGE THERMOMETER	30
TRANSMITTER TYPE F (PRE MOD. 1617)	

Fig. 4. D.C. and A.C. power supplies and distribution - twin UO (mod. 1428)

7923 59613 11/53 480 C.B&S.LTD. GP.85.

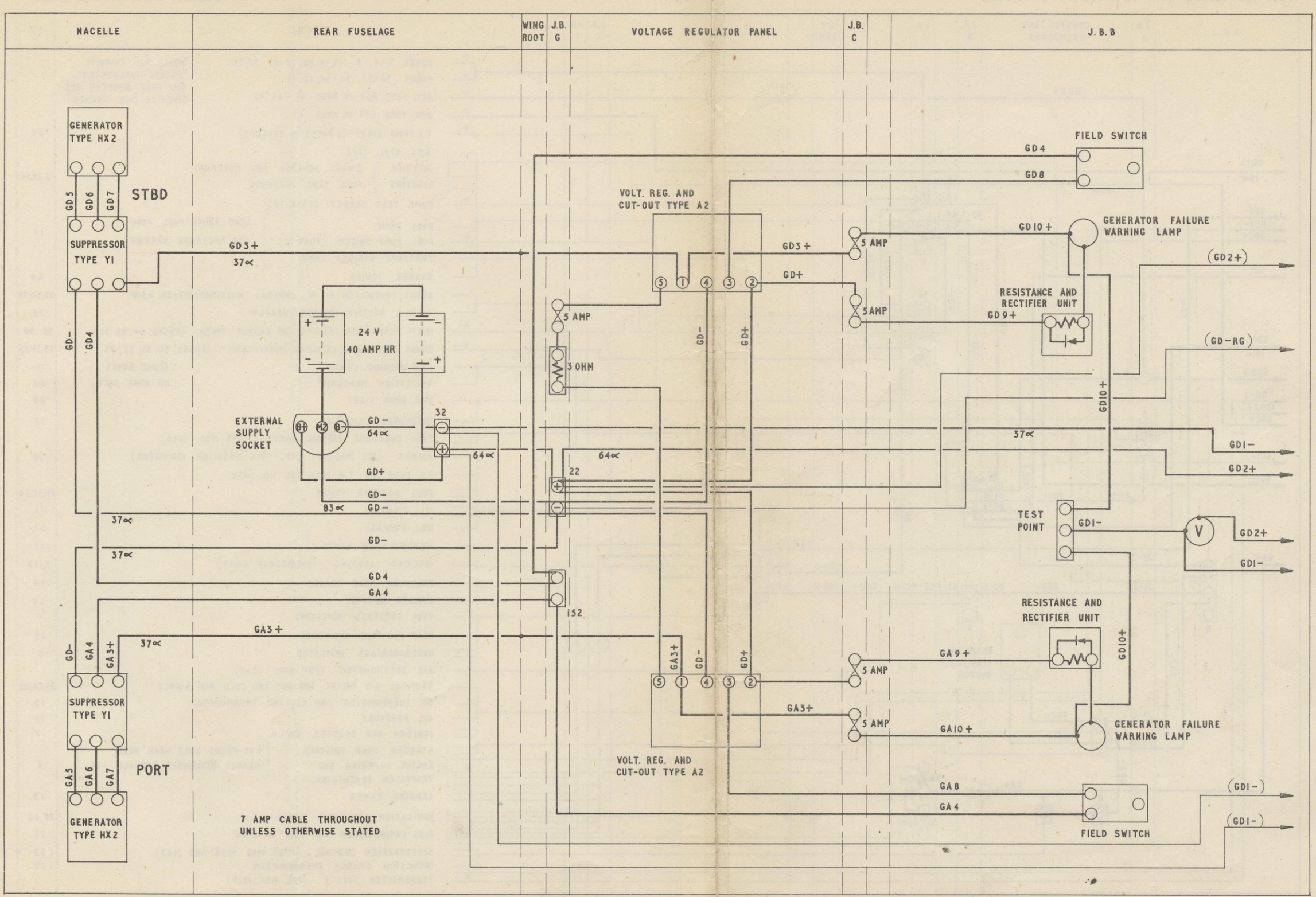

Fig. 5. D.C. power supply and distribution - twin HX2 (mod. 1601)

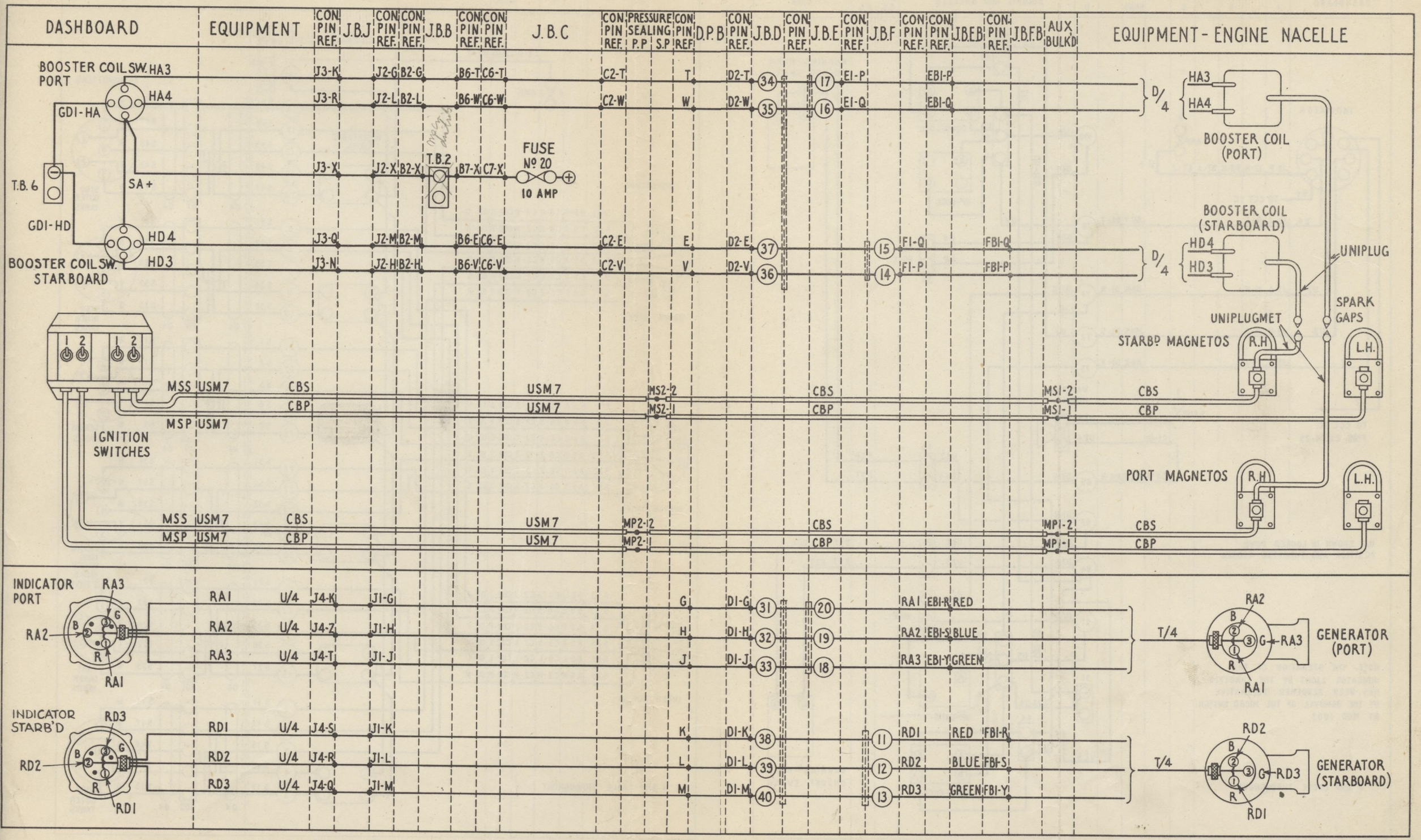

Fig. 7. Ignition and booster coils -- HA - HD, tachometers - RA - RD

7923 59613 11/53 450 C.B.&S.LTD. GP.55.

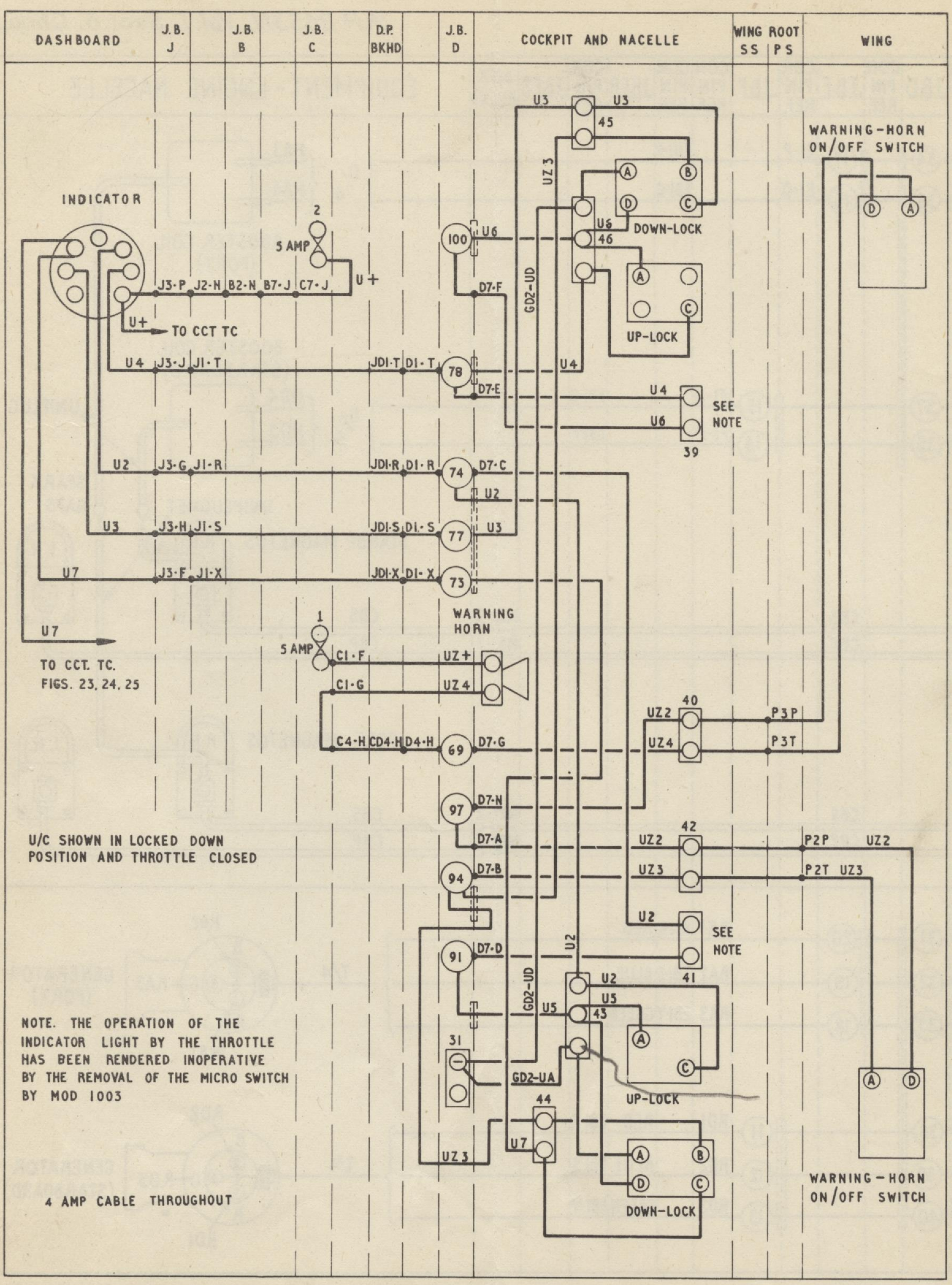

Fig. 8. Undercarriage indicator and warning horn – U – UZ

RESTRICTED

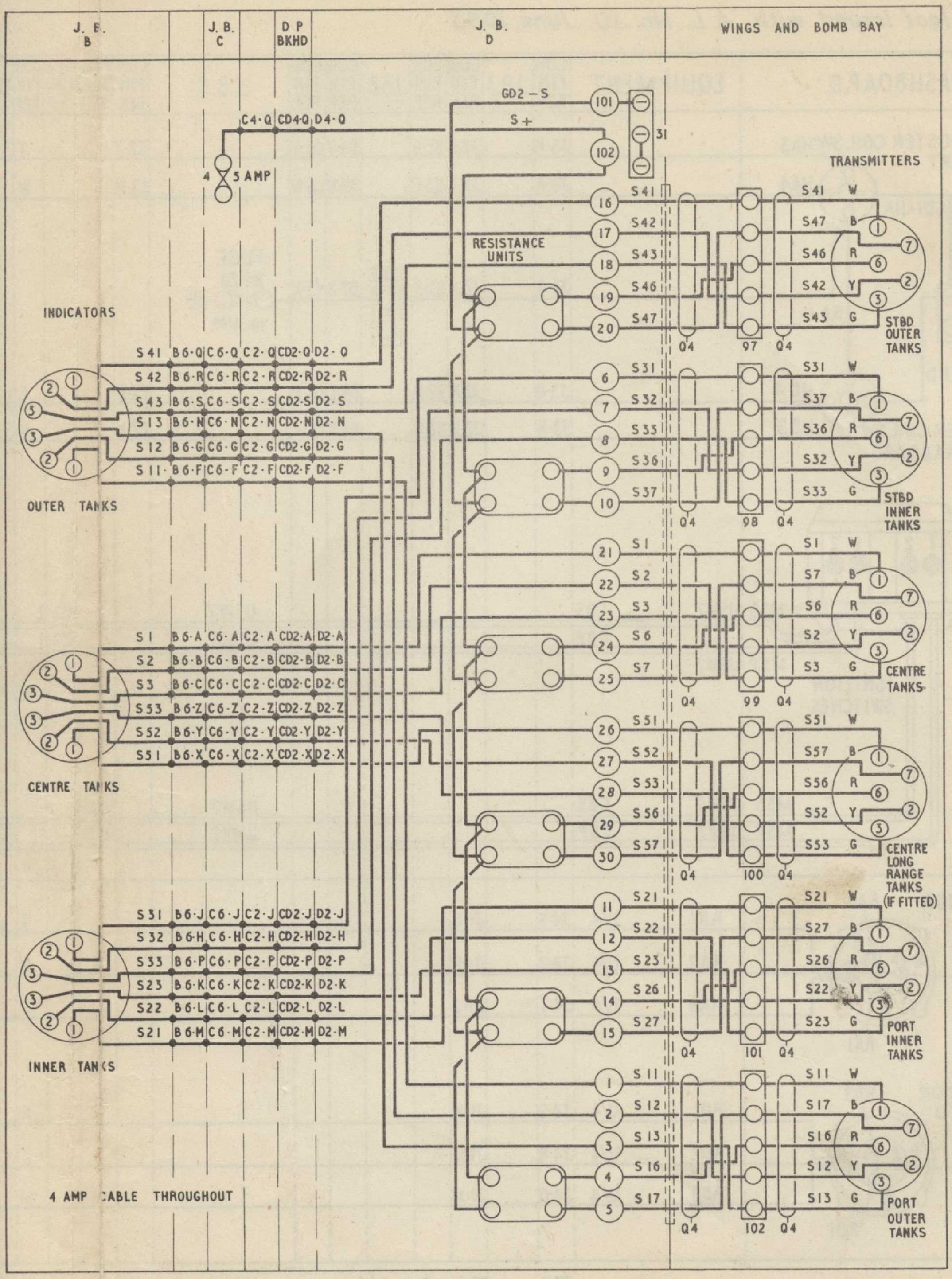

Fig. 9. Fuel contents indicators – S

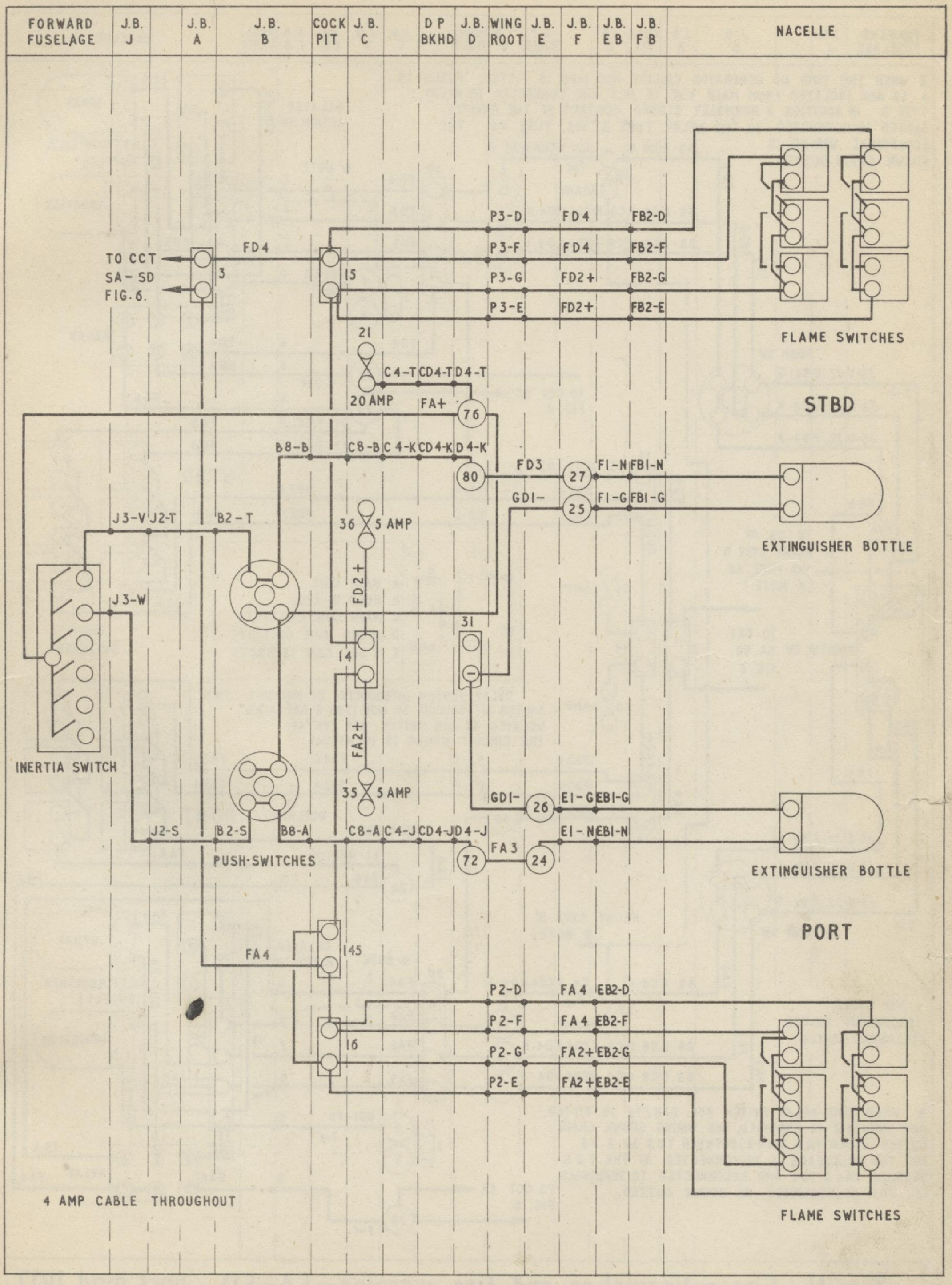

Fig. 10. Fire extinguisher and fire warning - FA-FD (pre mod. 1107)

RESTRICTED

7923 59613 11/53 450 C.B. & S. LTD. GP.55

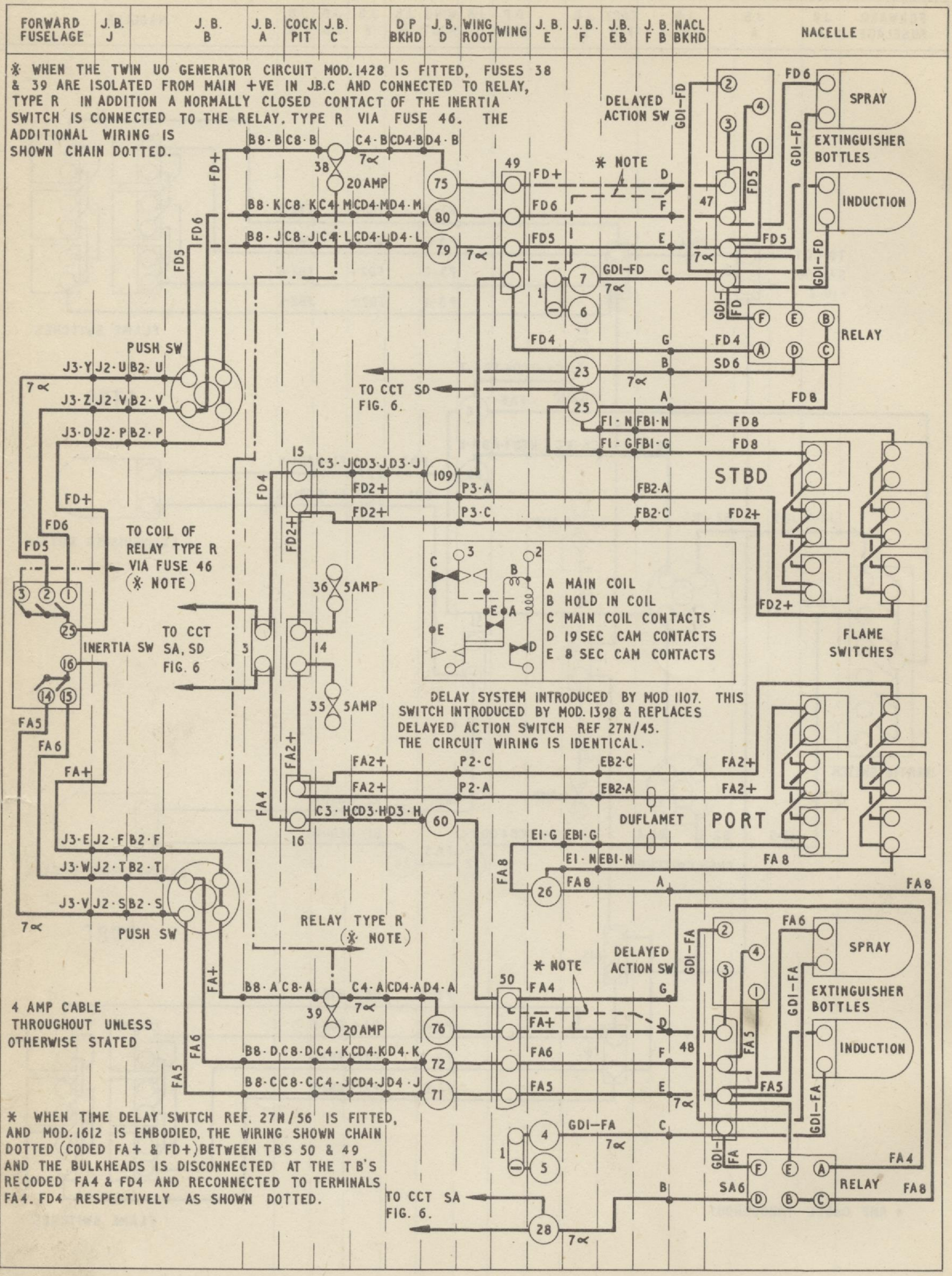

Fig. 11. Fire extinguisher and fire warning – FA–FD, (post mod. 1107)

DASHBOARD | J.B. J | COCKPIT | J.B. C | DP BKHD | J.B.D | REAR FUSELAGE | J.B. E | J.B. F | J.B. EB | J.B. FB | NACELLE

PD7-R D7-R 99 — WD3 — 2 F1-H FBI-H
PD7-Q D7-Q 98 — WD2 — 1 F1-U FBI-U
KD+ PD7-U D7-U
GDI-WD PD7-V D7-V
C4-D CD4-D D4-D 55
7 5 AMP
OIL DILUTION SWITCHES
31
6 5 AMP
C4-E CD4-E D4-E 52
GDI-WA PD7-T D7-T
KA+ PD7-S D7-S
PD7-H D7-H 92 — WA2 — 10 E1-U EBI-U
PD7-P D7-P 93 — WA3 — 9 E1-H EBI-H

95 — STBD
96 — PORT
OIL DILUTION VALVES

POST MOD 1068 AND 1163

J4-C JI-E BC6 JDI-E DI-E 106
8 5 AMP CD4-0 D4-0 70
MASTER SWITCH
BC+1
BC+
C4-0
13
7
D5-L BC+ 62
D5-M BC2
ANEROID SWITCH
87
J4-D JI-2 BC7 JDI-2 DI-2 108

F1-A FBI-A
F1-J FBI-J 3
F1-F FBI-F 29
F1-I FBI-I 5
BC2
103
BC6
BC+
STBD
SUPERCHARGER RAM SOLENOIDS
TEST PUSH-SWITCHES

E1-I EBI-I 6
E1-F EBI-F 14
E1-J EBI-J 8
E1-A EBI-A
92
BC+
BC7
BC2
BC2
PORT

PRE MOD 1068 AND 1163

7 5 AMP C4-D CD4-D D4-D
GD2-BC
BC8
MASTER SWITCH
6
7
J4-C JI-E BC6 JDI-E DI-E 106
J4-D JI-2 BC7 JDI-2 DI-2 108
C4-0 CD4-0 D4-0 70
8 5 AMP
D5-L 62 BC+
D5-M BC2
ANEROID SWITCH
87
6 5 AMP C4-E CD4-E D4-E

55
F1-I FBI-I 26
F1-J FBI-J 3
F1-F FBI-F 29
E1-J EBI-J 8
E1-F EBI-F 14
E1-I EBI-I 25
52
KD+
BC2
BC2
BC6
BC2
BC7
BC2
KA+
103
92
STBD
PORT
TEST PUSH-SWITCH
SUPERCHARGER RAM SOLENOIDS
TEST PUSH-SWITCH

Fig. 12. Oil dilution - WA - WD, supercharger control - BC

7923 59613 11/53 450 C.B.& S. LTD. GP.55

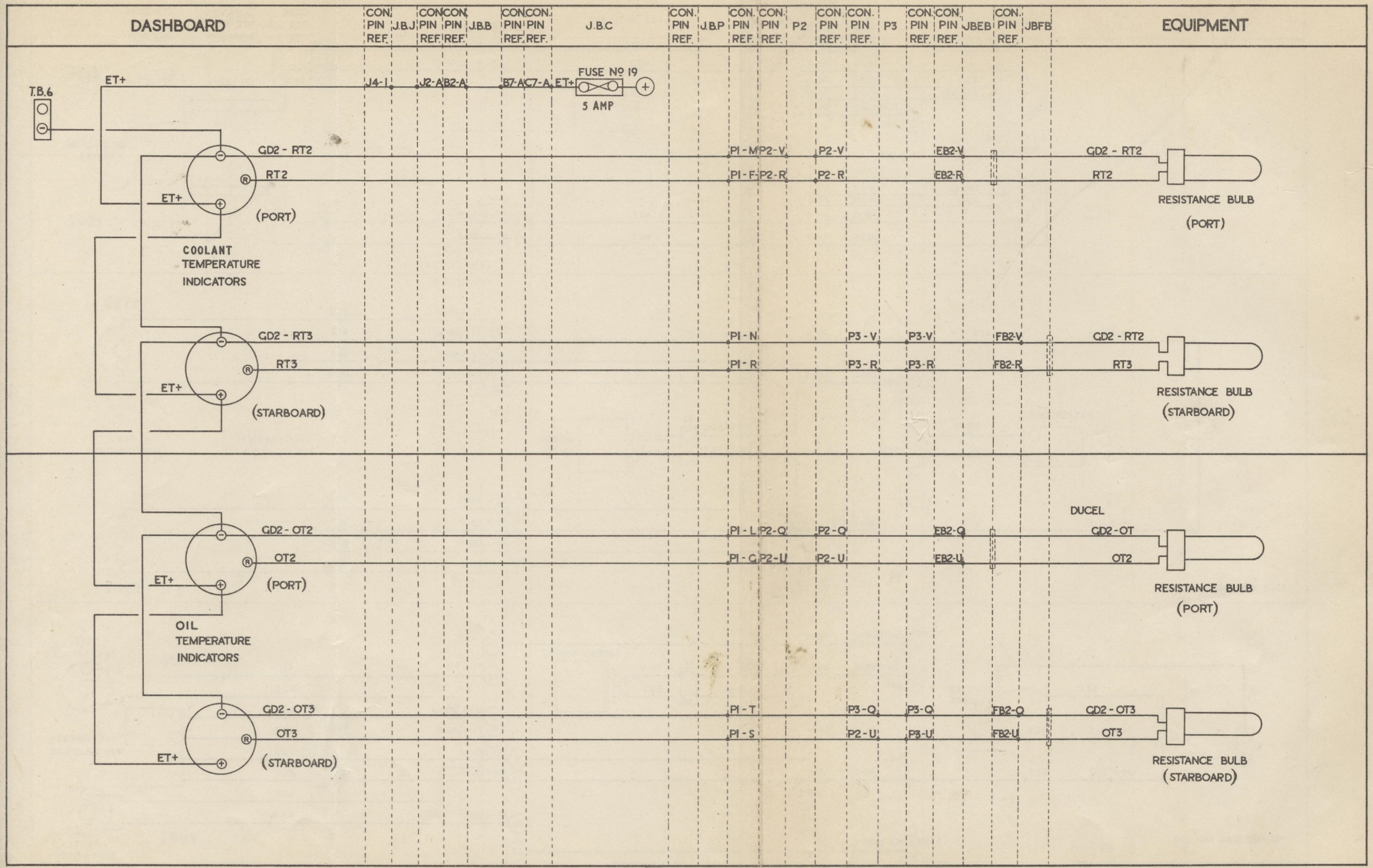

Fig. 13. Coolant thermometer - RT, oil thermometer - OT

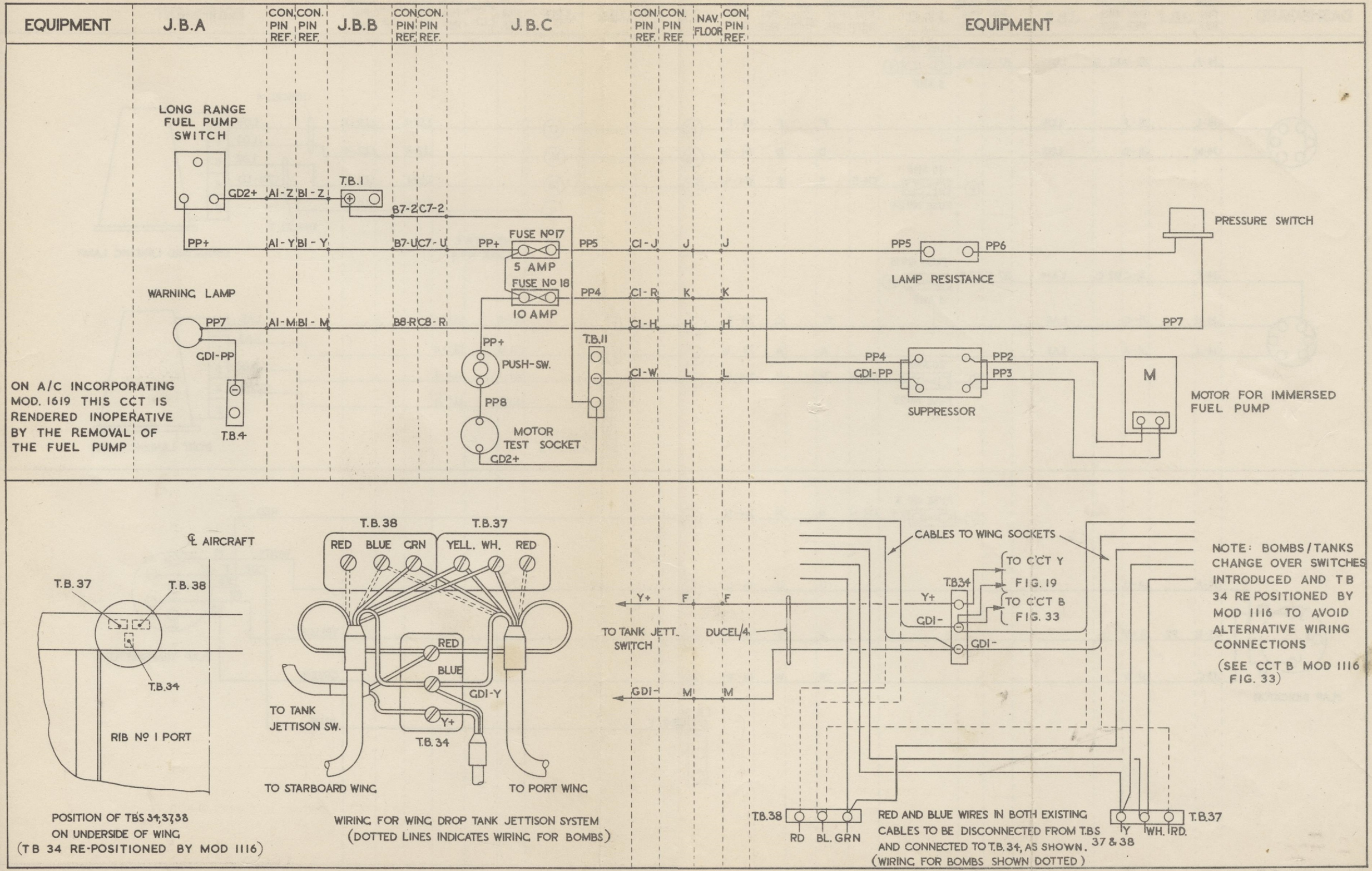

Fig. 14. Long range fuel pump and pressure warning - PP, fuel tank jettison - Y

RESTRICTED

7923 59612 11/53 450 C.B.& S. LTD. GP.55

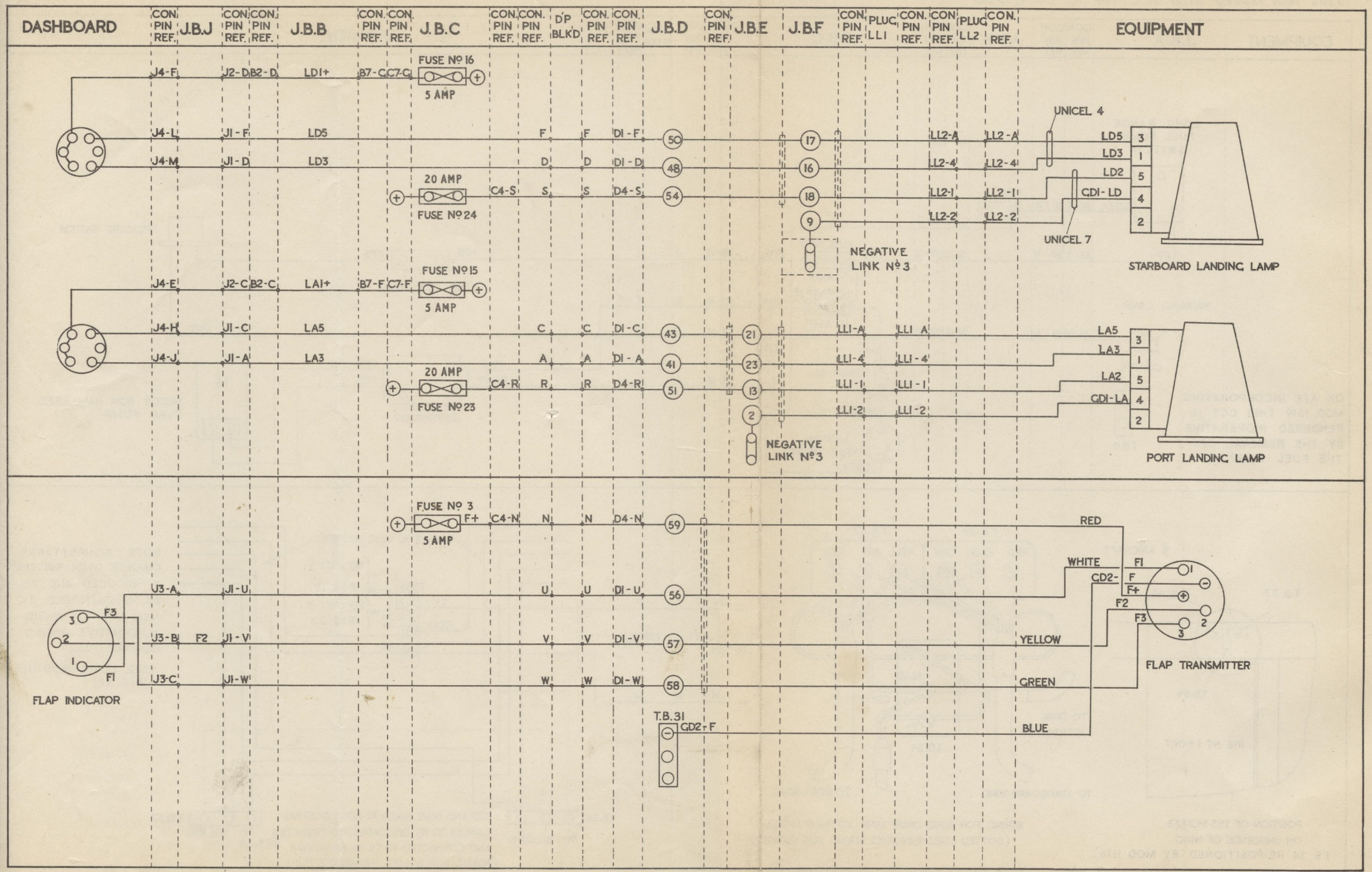

Fig. 15. Landing lamps – LA–LD, flap position indicator – F

NOSE	COCKPIT	J. B. J		J. B. B		J. B. C

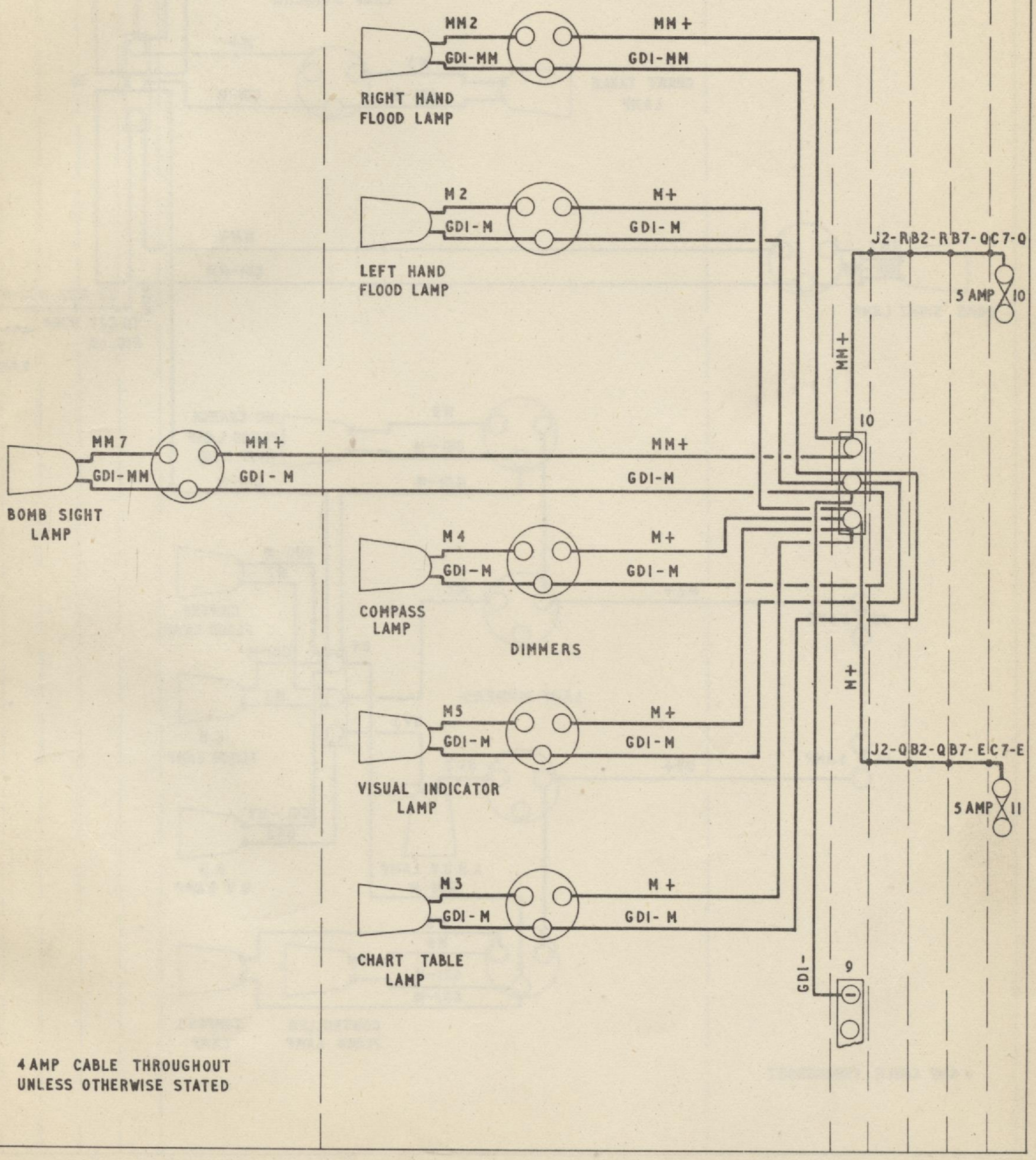

Fig.16. Instrument lighting – M – MM (pre mod.1112)

7923 59613 11/53 450 C.B&S.LTD. GP.55.

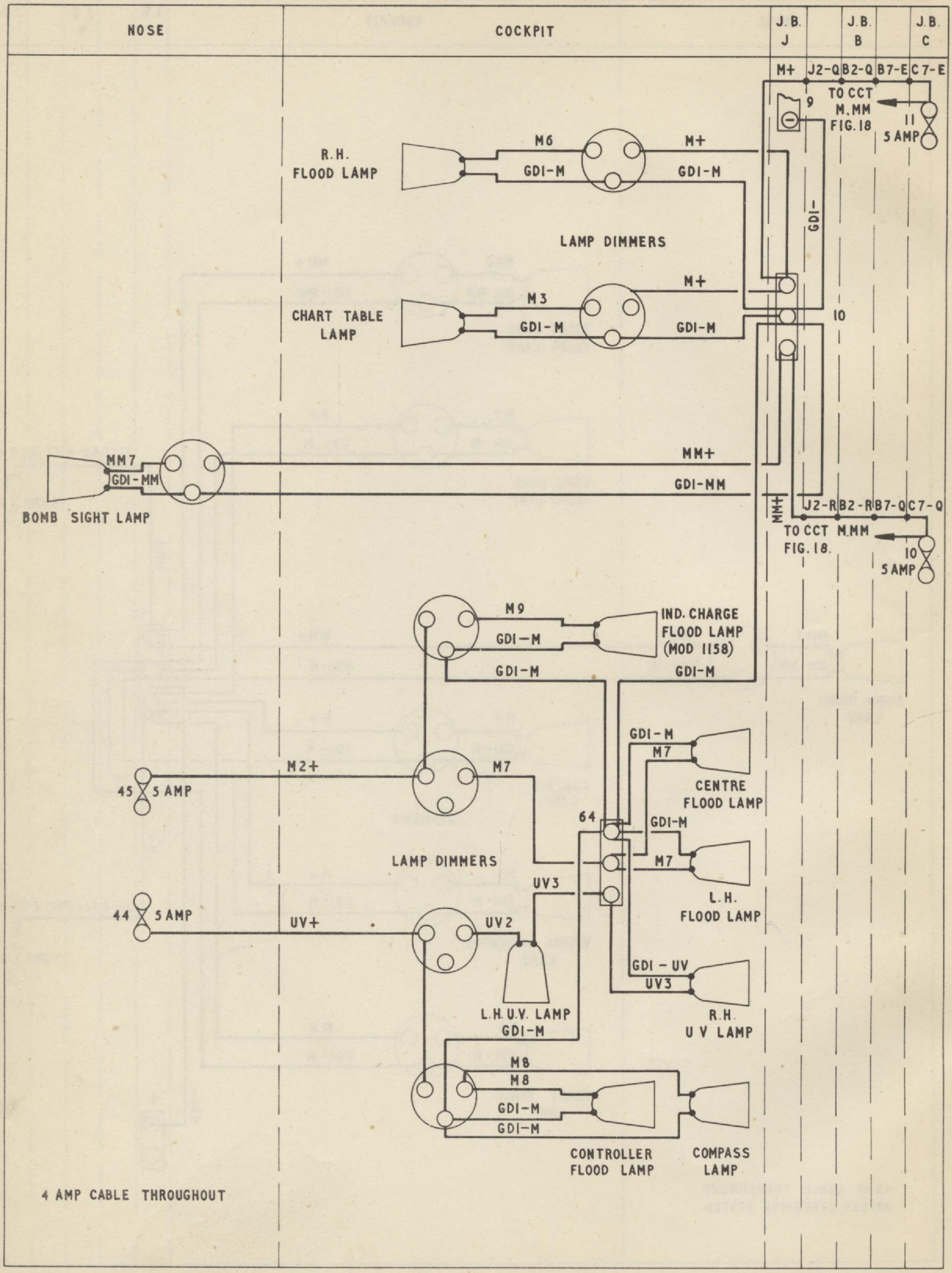

Fig. 17. Instrument lighting - M-MM-UV (post mod. 1112)

RESTRICTED

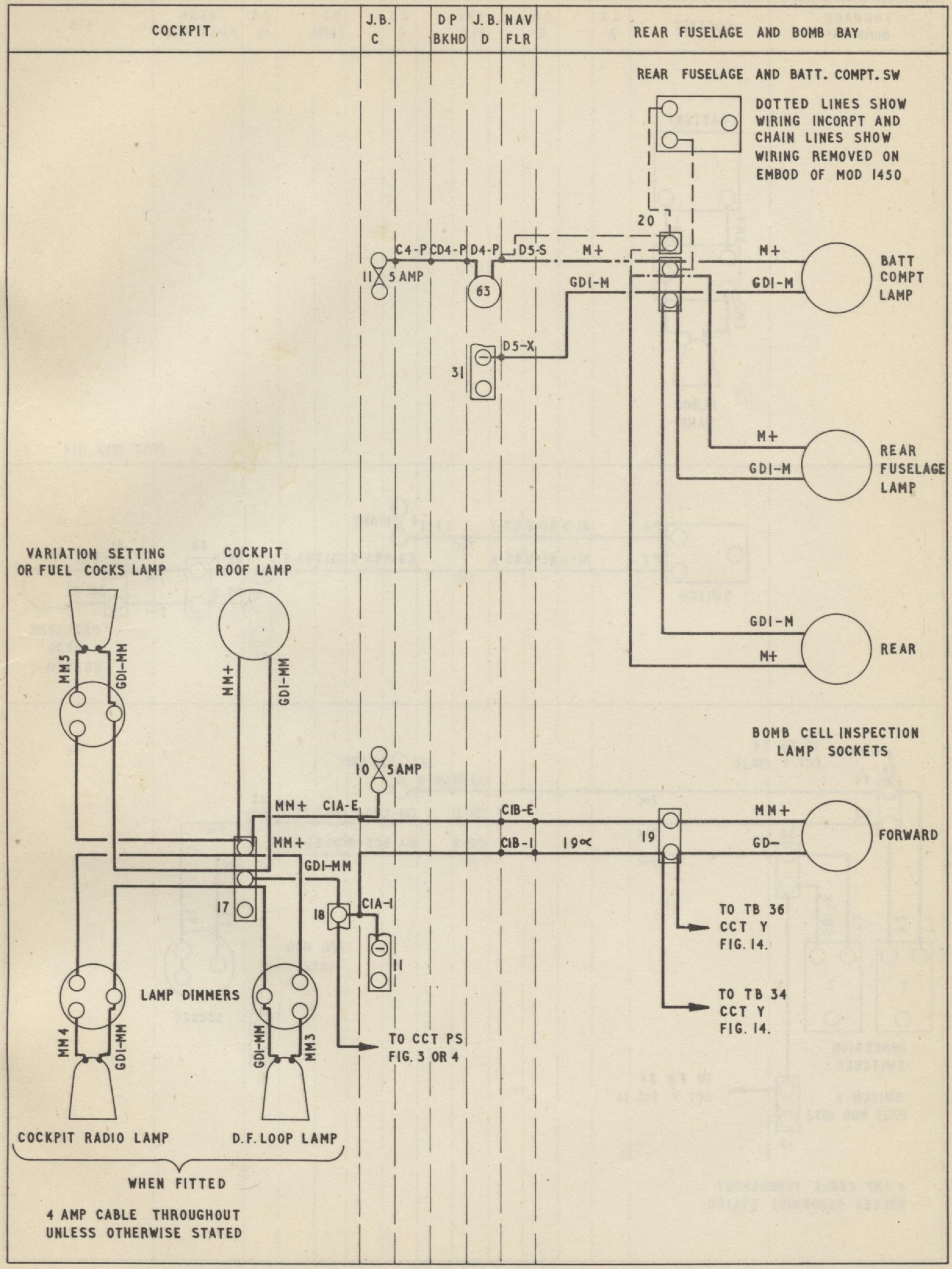

Fig. 18. Interior lighting – M – MM

7923 59613 11/53 450 C.B&S.LTD. GP.55.

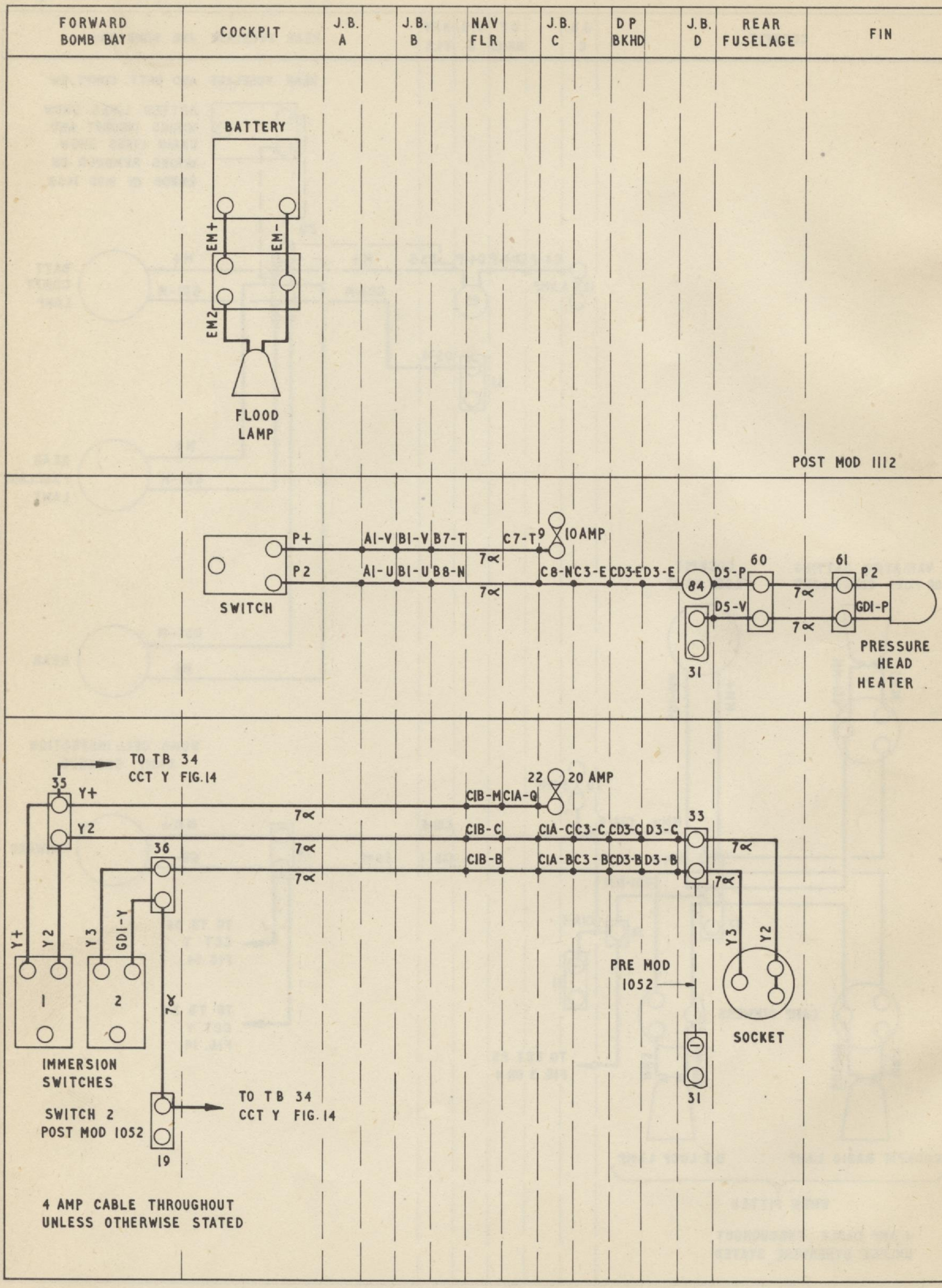

Fig.19. Emergency lamp-EM, pressure head heater-P, dinghy release-Y

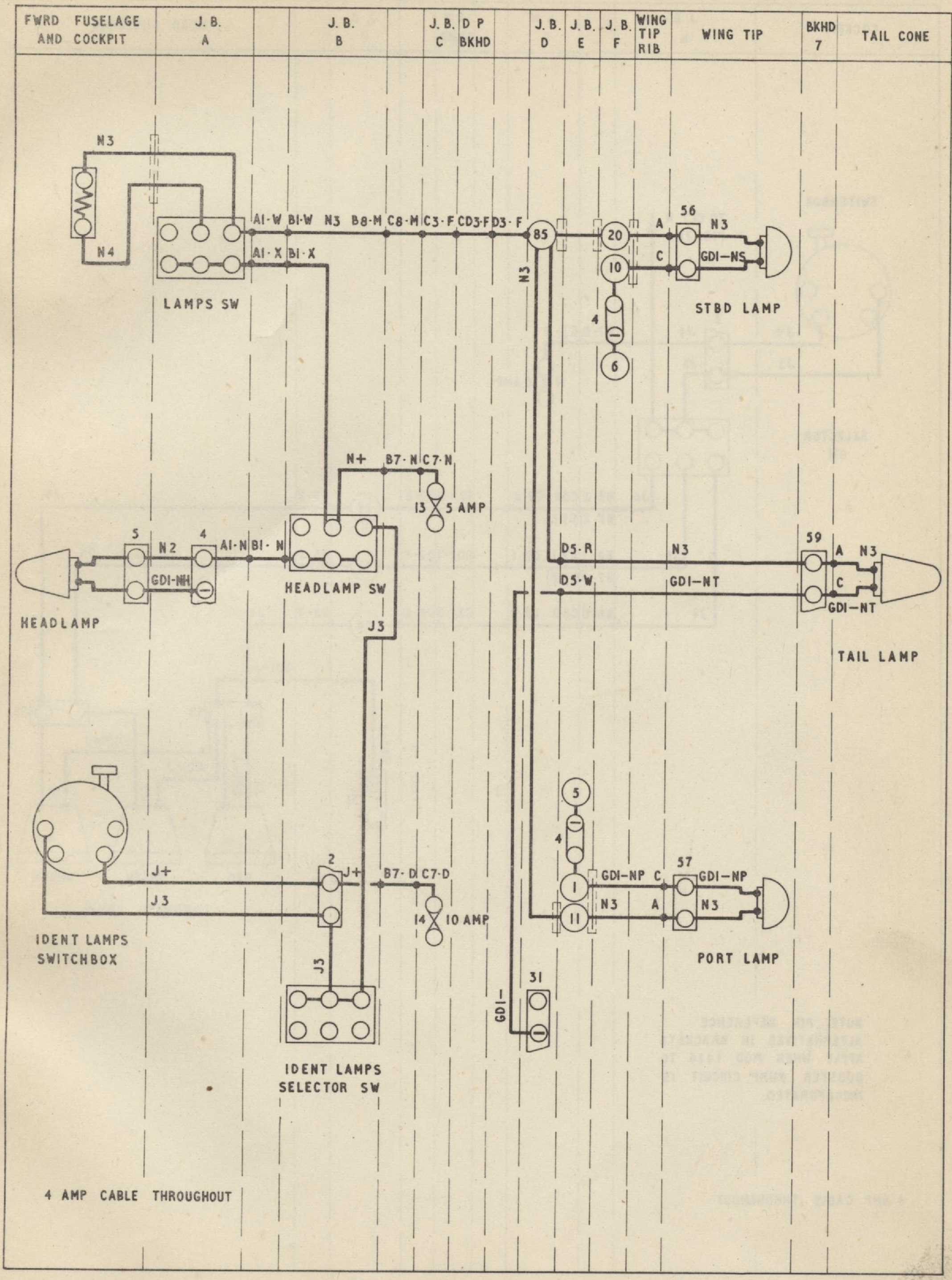

Fig. 20. Navigation lamps –N

7923 59613 11/53 450 C.B&S.LTD. GP.55.

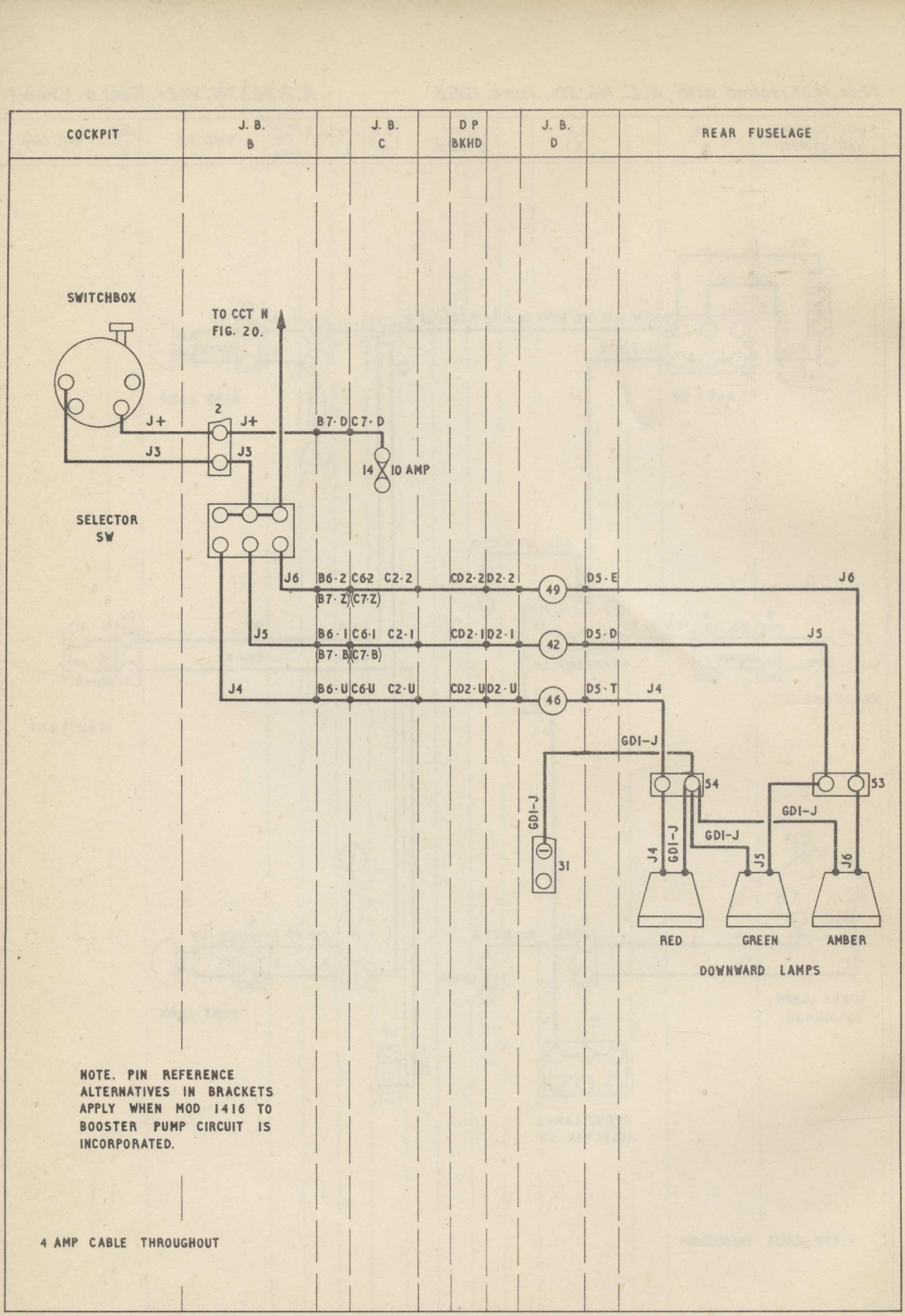

NOTE. PIN REFERENCE ALTERNATIVES IN BRACKETS APPLY WHEN MOD 1416 TO BOOSTER PUMP CIRCUIT IS INCORPORATED.

4 AMP CABLE THROUGHOUT

Fig. 21. Identification lamps – J

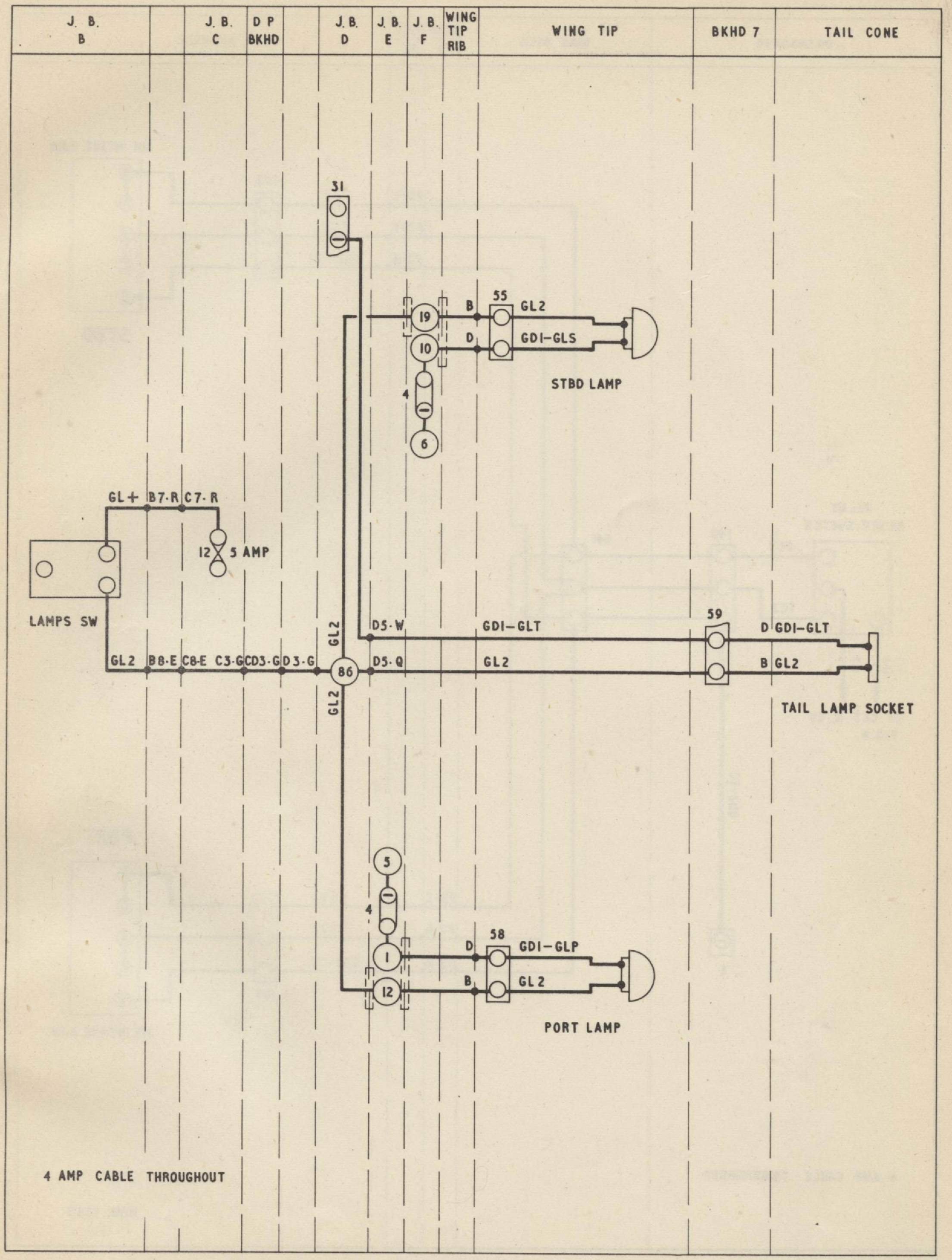

Fig. 22. Resin lamps – GL

7923 59613 11/53 450 C.B&S.LTD. GP.55.

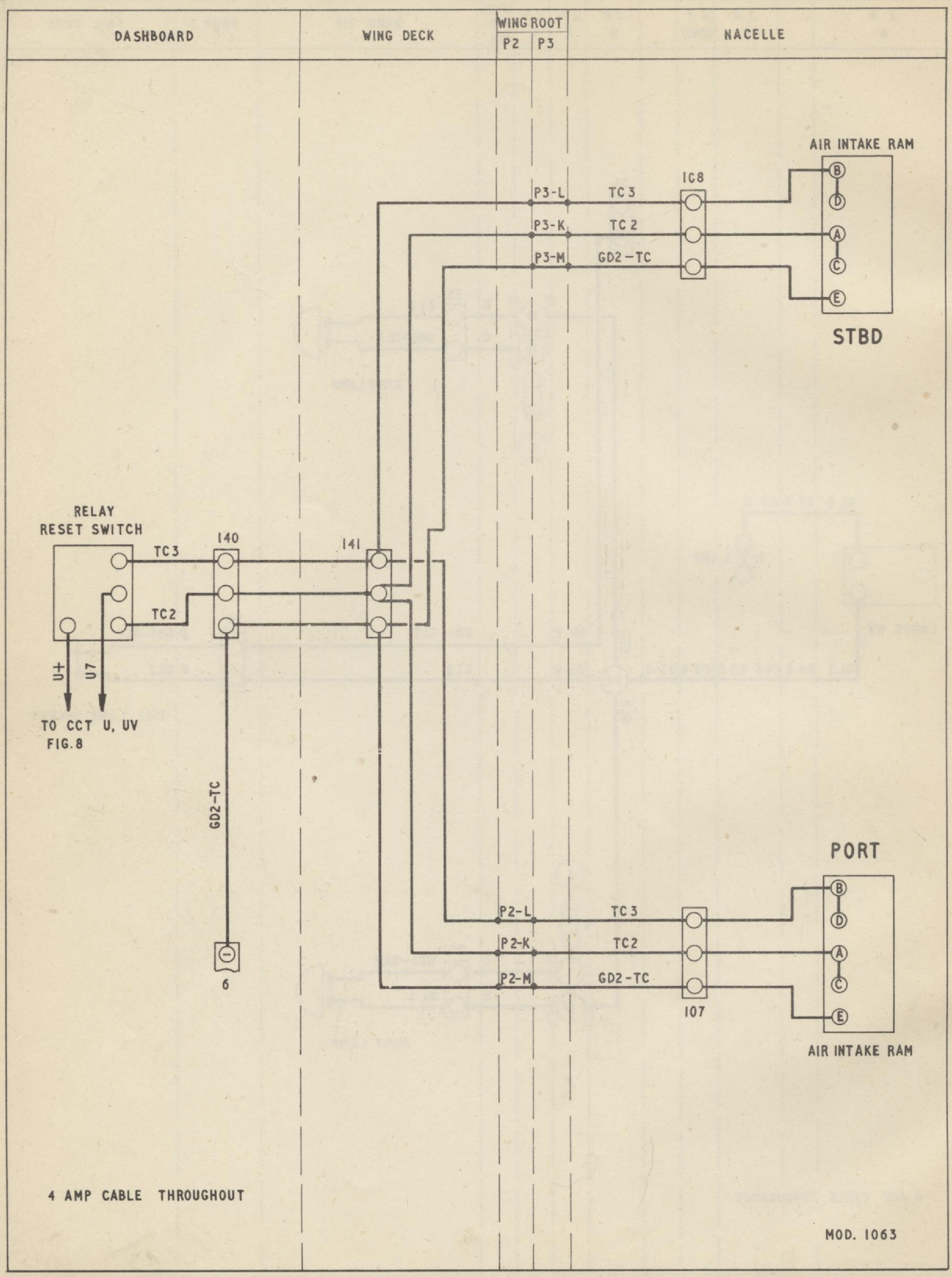

Fig. 23. Tropical air intake–TC

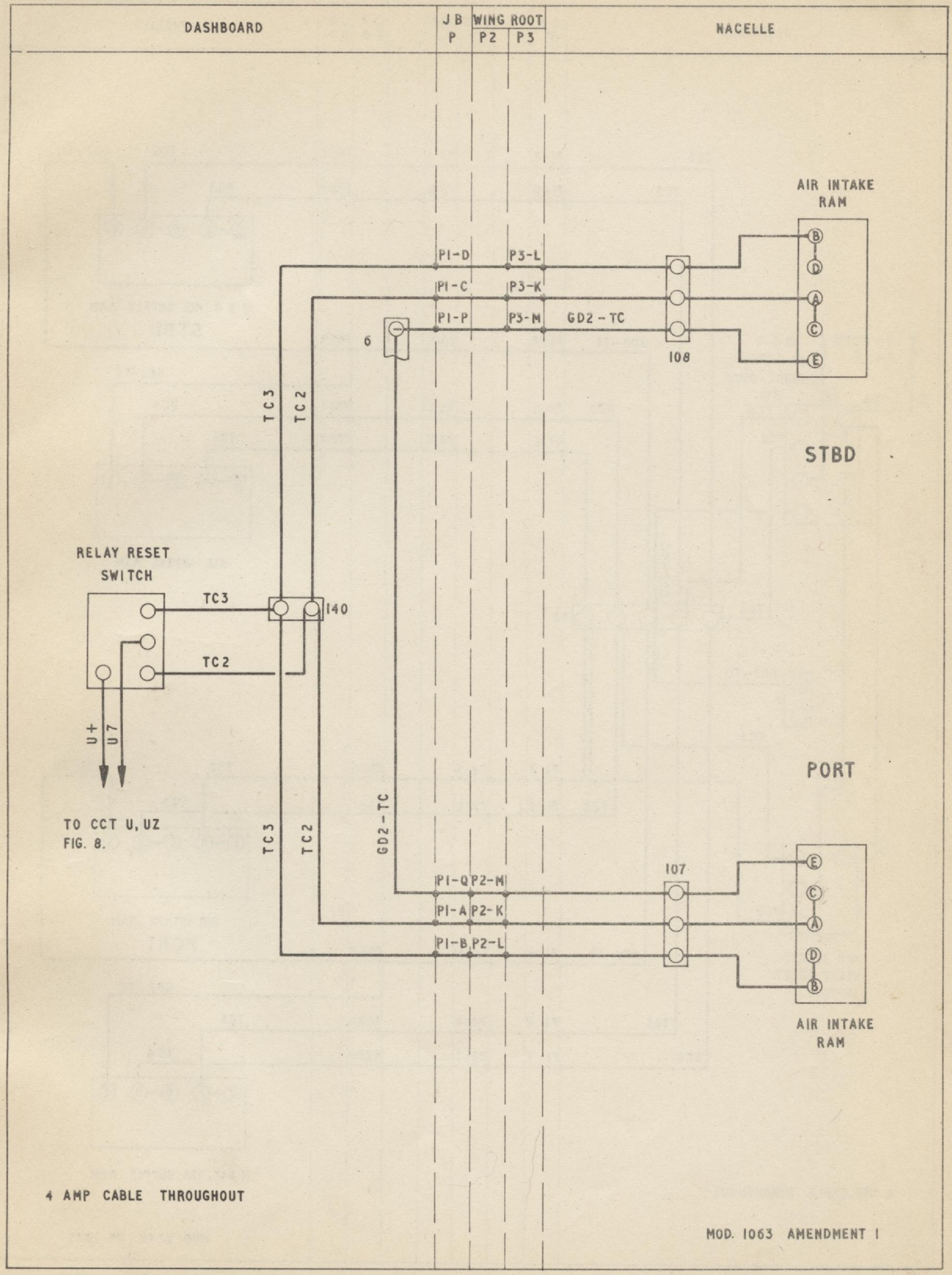

Fig.24. Tropical air intake-TC (mod.1063 amend.1)

7923 59618 11/53 450 C.B&S.LTD. GP.55.

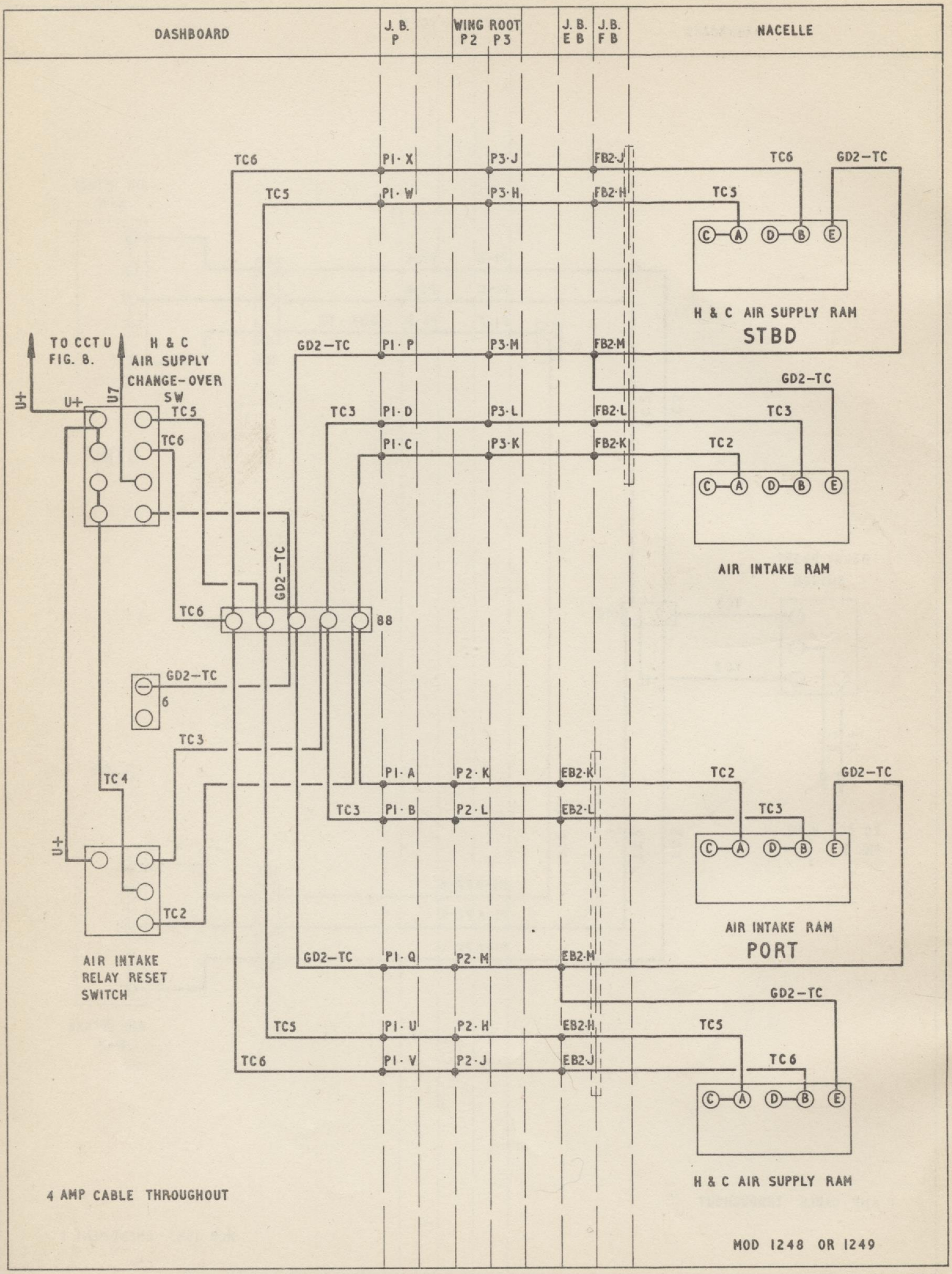

Fig. 25. Tropical air intake and hot and cold air supply – TC

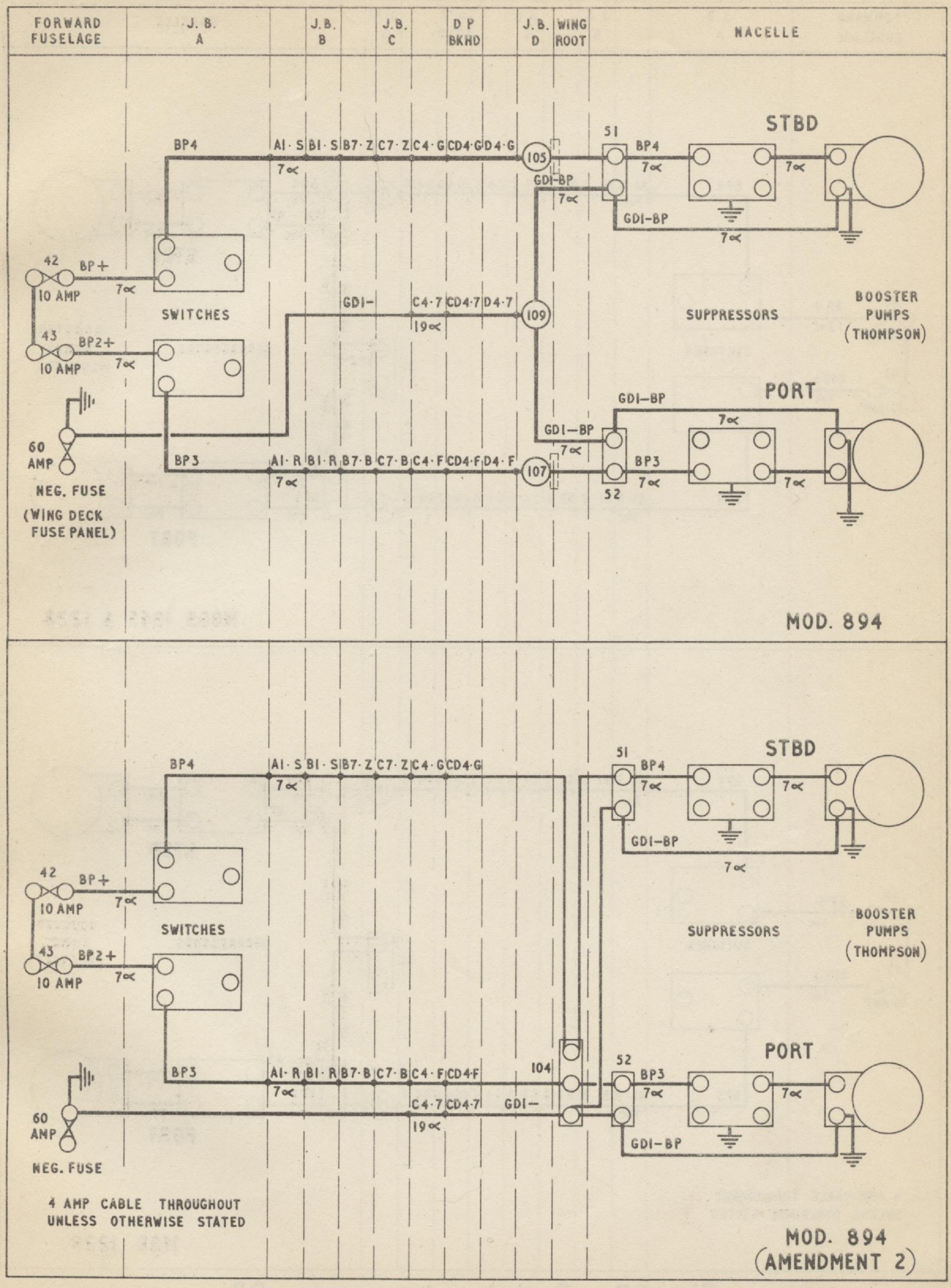

Fig. 26. Fuel booster pumps – BP

7923 59613 11/53 450 C.B.&S.LTD. GP.55.

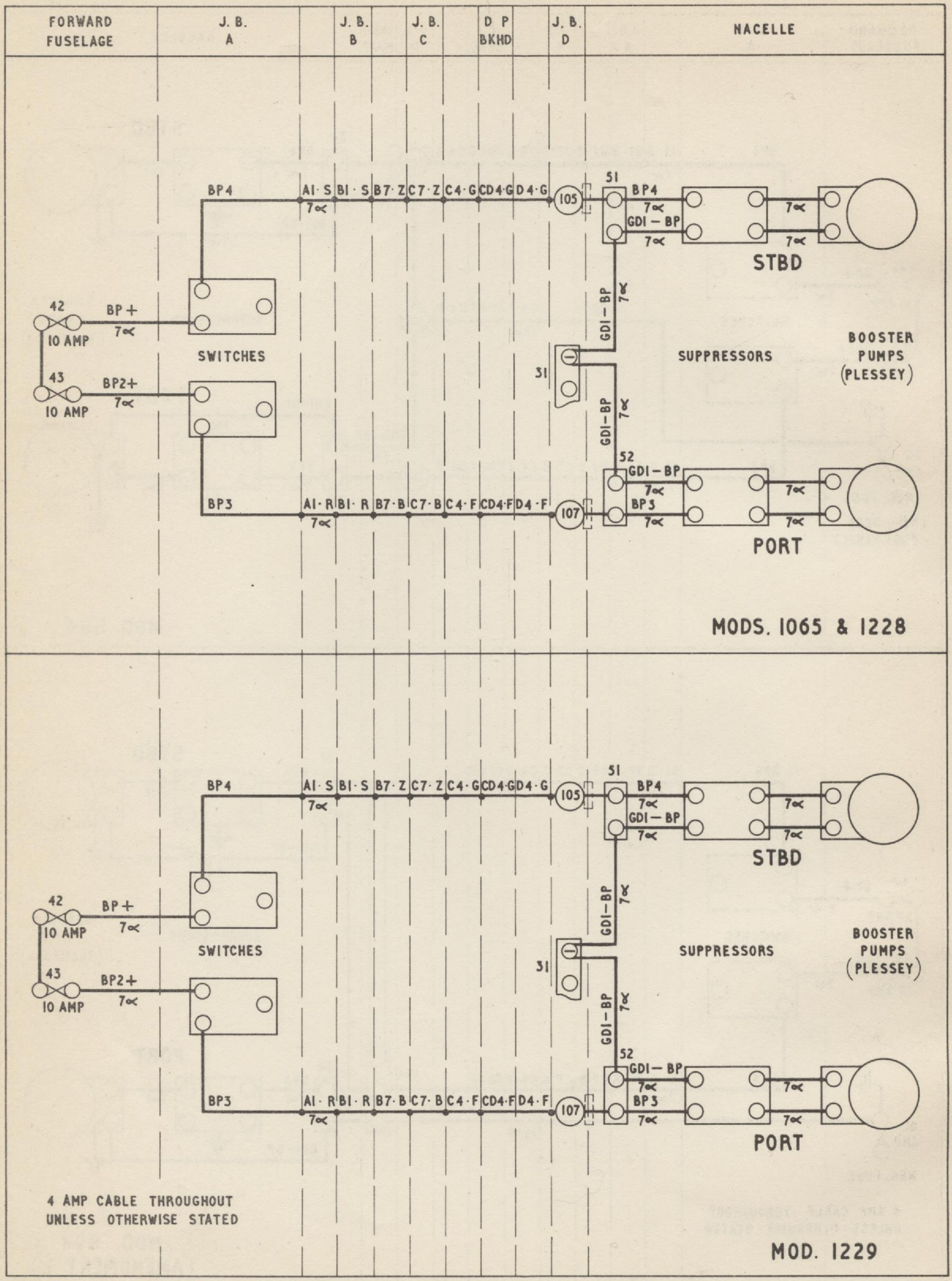

Fig. 27. Fuel booster pumps – BP

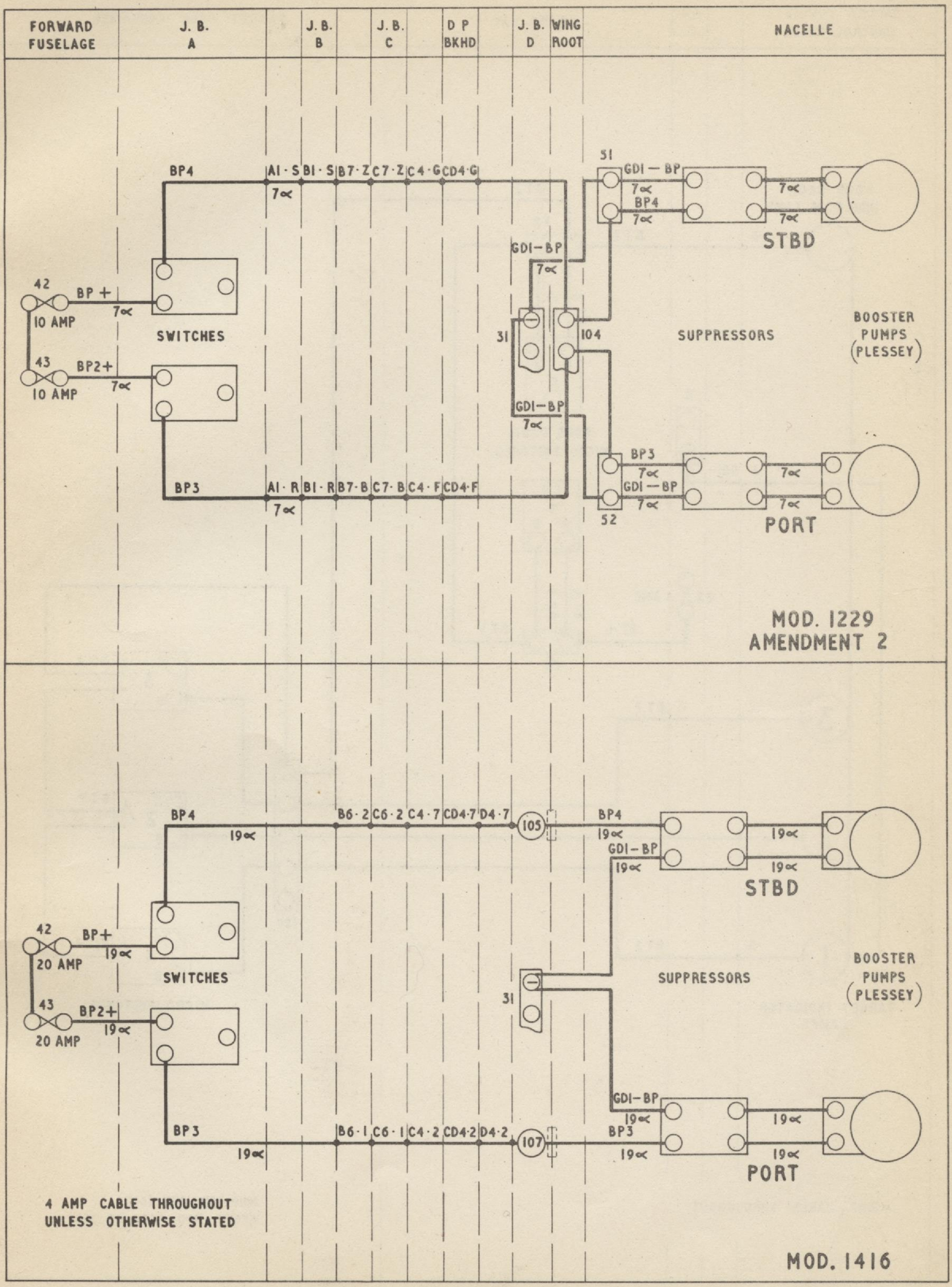

Fig. 28. Fuel booster pumps - BP

7923 59613 11/53 450 C.B.& S. LTD. GP.55

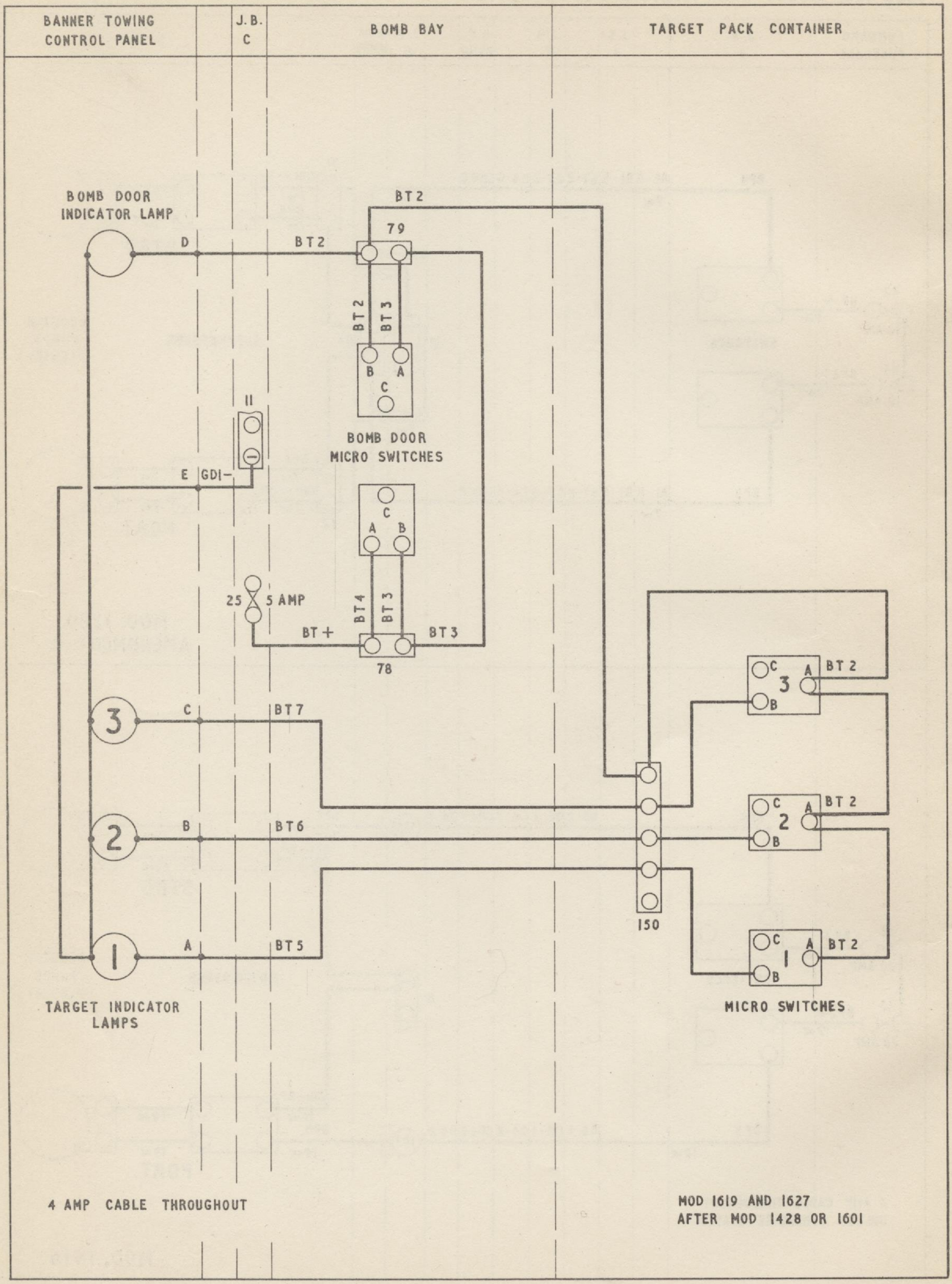

Fig. 29. Banner towing - BT

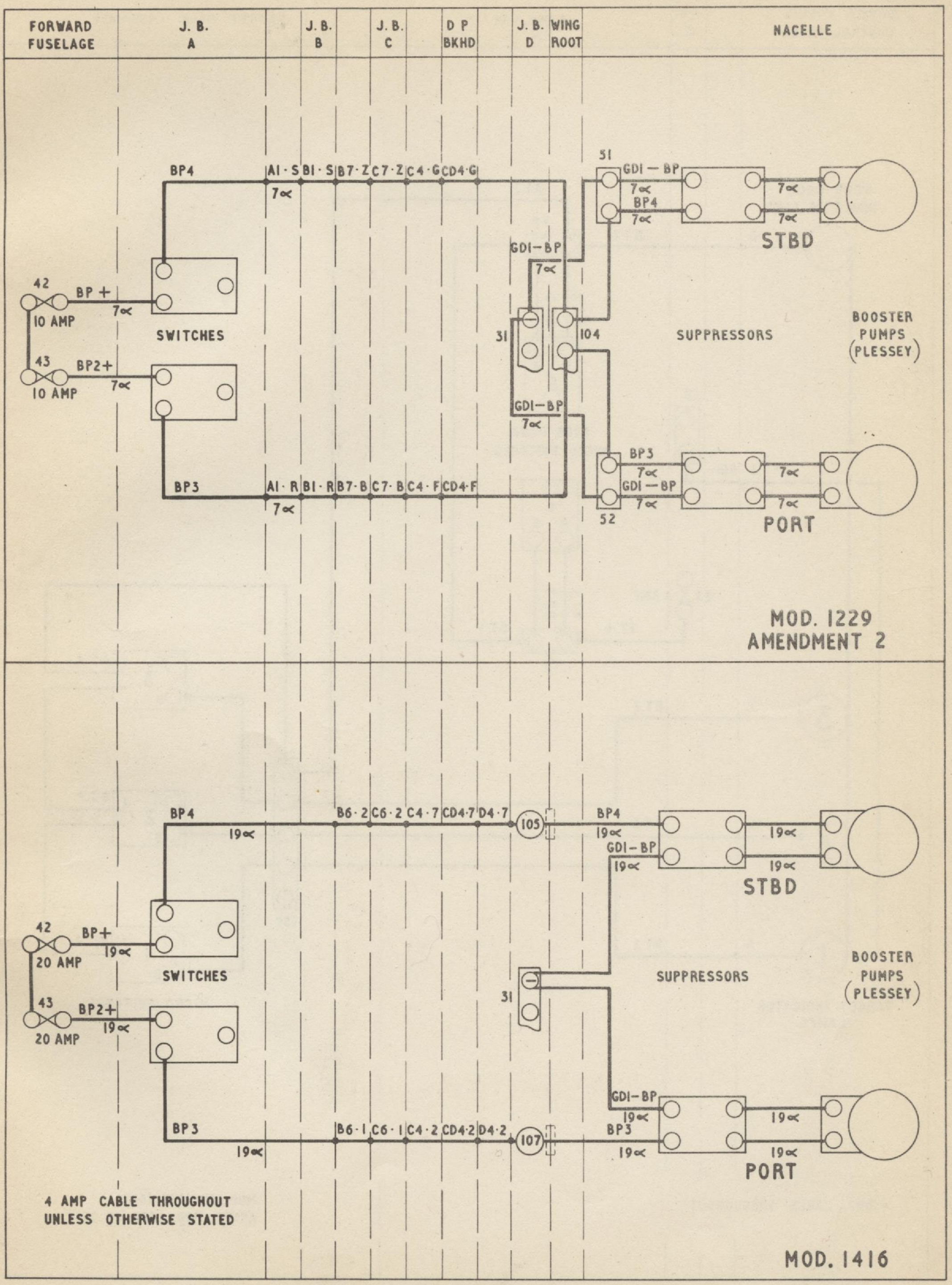

Fig. 28. Fuel booster pumps - BP

7923 59613 11/53 450 C.B.& S. LTD. GP.55

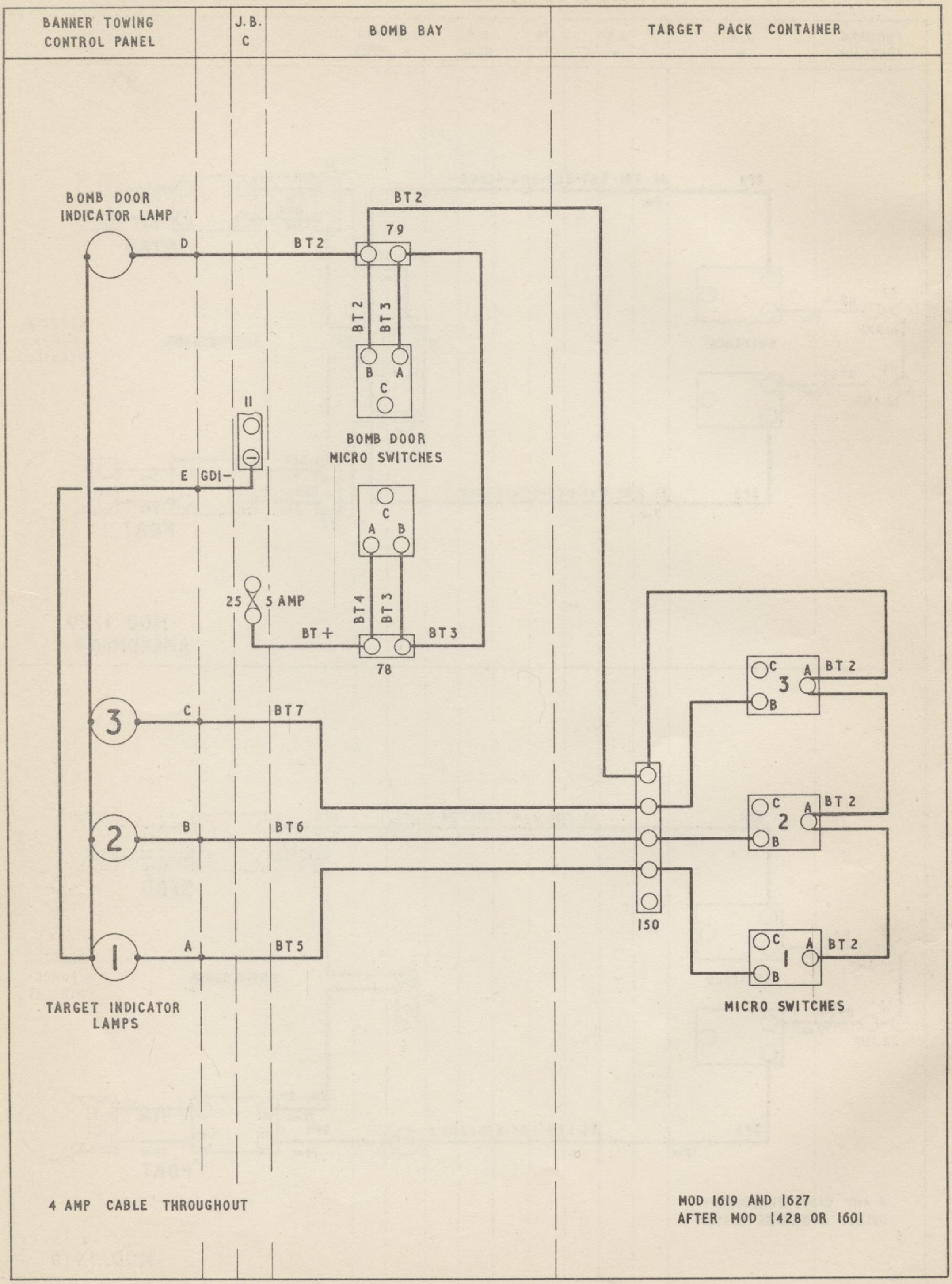

Fig. 29. Banner towing - BT

WING DECK	COCKPIT	WING ROOT PANELS	AUX NACELLE BKHD	ENGINE BAY

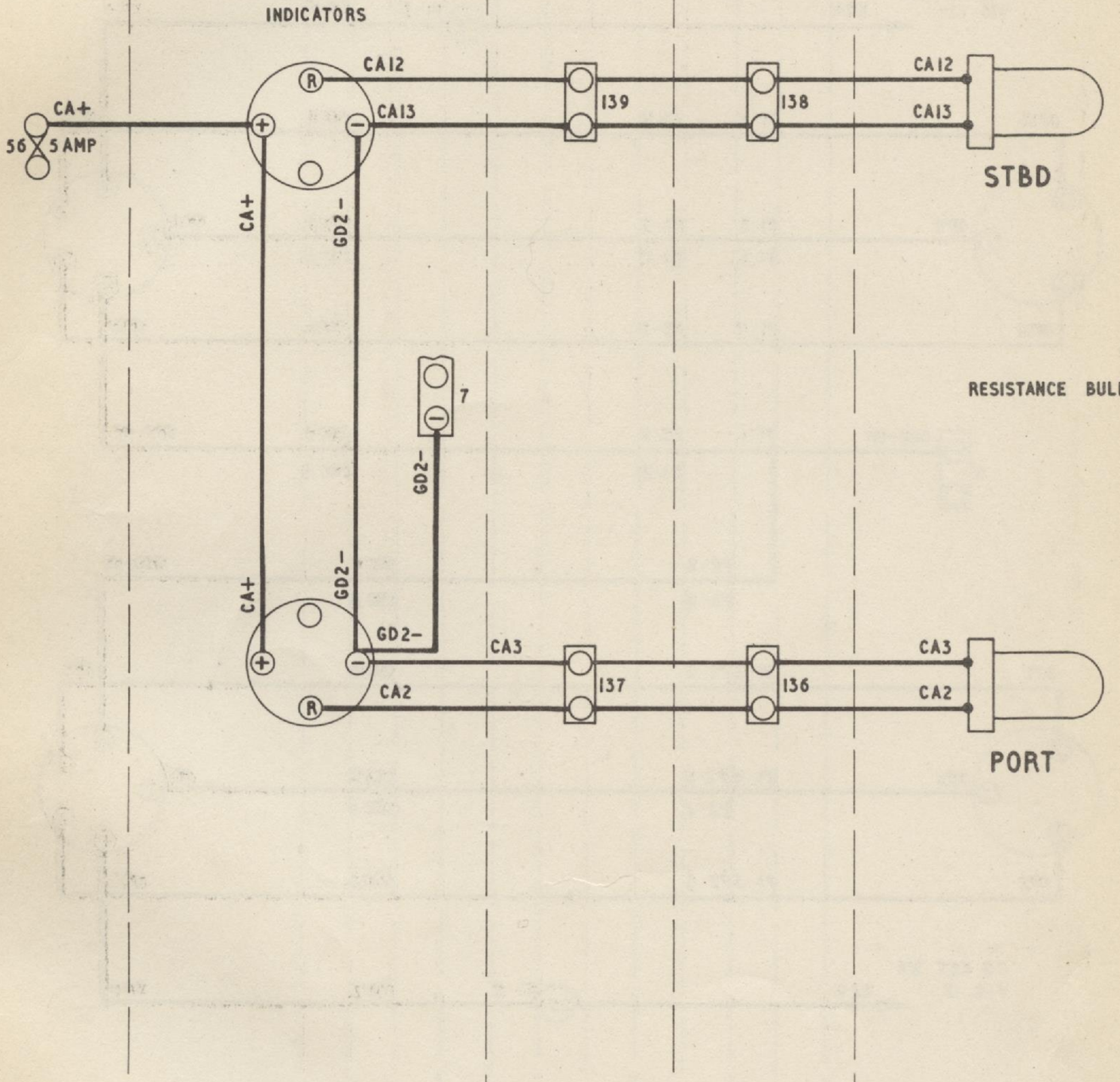

4 AMP CABLE THROUGHOUT

POST MOD. 1158

Fig. 30. Induction charge thermometer – CA

7923 59613 11/63 450 C.B.& S.LTD. GP.55

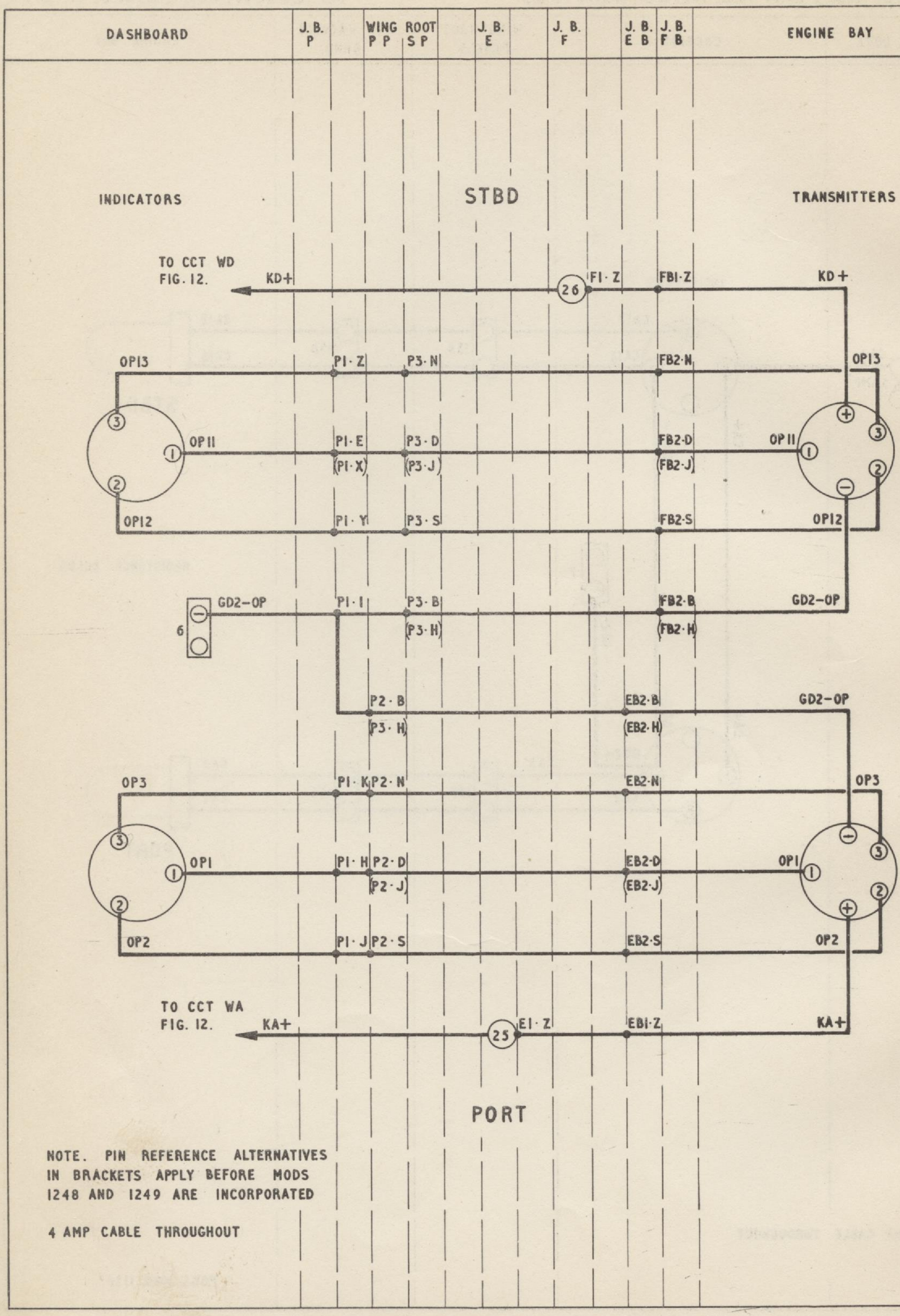

Fig. 31. Oil pressure – OP

EQUIPMENT

CON. PIN REF. | J.B.C | CON. PIN REF. | CON. PIN REF. | D.P BLK'D | CON. PIN REF. | CON. PIN REF. | J.B.D | CON. PIN REF.

EQUIPMENT

PILOT'S REPEATER

CONTROL PANEL

TRIMET/4

10 AMP FUSE No 27

C4-6 | 6 | 6 | D4-6

T.B.30 R

T.B.31 B

DR+

GDI-

DUCEL 19

SUPPRESSOR TYPE B1

DUMET/19

TRIMET/7

COMPASS JUNCTION BOX

SEXTOMET/4

VARIATION SETTING CORRECTOR

J J
K K
L L

D D RED
E E BLUE
F F GREEN
G G YELLOW
H H WHITE

DISTRIBUTOR BOX, TYPE D

LEAD & PLUG SUPPLIED WITH MASTER COMPASS

QUINTOMET/4

DUMET/4

TO A.P.I. C'C'T FIG 36

3 WAY JUNCTION BOX TYPE A

JUNCTION BOX TYPE A

C C
B B
A A

G B R

TRIMET/4

JUNCTION BOX TYPE A OR B

TO COMPUTOR

N N
M M
O O

TRIFLEXMET/2·5

TRIFLEXMET/2·5

INDICATOR HEADING

MASTER COMPASS, MK.1

Fig.32. D.R.compass-DR

RESTRICTED

7923 S9613 11/53 450 C.B.&S.LTD. GP.55

EQUIPMENT | DISTRIBUTOR AND SELECTOR PANEL | CON. PIN REF. | PLUG ※ | CON. PIN REF. | PLUG ⊗ | CON. PIN REF. | FUSE BOX | J.B.C. | CON. PIN REF. | COCK-PIT FL'R. | CON. PIN REF. | EQUIPMENT

NOTE:- PHOTO FLASH SOCKET IS SHOWN ON C'C'T. R FIG. 34.

R7 TO C'C'T. R (MULTI-FLASH) FIG. 35

GDI-QE TO C'C'T QE A1134A

FUZING SWITCHES

B10 NOSE B10+ B10 B9+ TAIL B9 LINK B10

DISTRIBUTOR SELECTOR SW B27 B12 R27 TO C'C'T R FIG. 34

B+ BOMB CIRCUIT SWITCH B18+ B8 T.B.69 GDI-B

G B8 BOMB DOORS LAMP

B18+ T.B.65 GDI-B T.B.66

GDI-B TO C'C'T. R FIG. 34

R17 GDI-R TO C'C'T. R FIG. 34

DE-LATCHING RELAY TYPE B

B9 T.B.67 B10

FUZING INTERLOCK

B9 GDI-B B10

SELECTOR SWITCH BOX

TERMINALS GDI-B B32 B23 B1 B26

TO A.R.I. 5685 SEE CHAP. 4

B12 B11 T.B.68 GDI-B

B18+

B1 B2 B3 B4 B5 B6

B18+ FUSE 52 B10+ 53 B9+

GD2+ TO CIRCUIT MFH FIG 35

T.B. 11 T.B. 13 FUSE 50 B+ GD2+

B5R T.B.38 B6R T.B.37 STBD PORT Nº6 Nº5 WING BOMB SOCKETS

B5 B10 B9 B6 B6R BOMBS/TANKS CHANGE-OVER SW'S.

TO C'C'T Y FIG. 14

GDI- B8 B9 B10

B4R B3R B2R B1R T.B.74

T.B.73 B6 B5 B14 B9F B10F T.B. 76

T.B.70 B11 B12 T.B.71 (BLACK) BOMB AND PHOTO FLASH (4·5 IN.) FIRING SOCKETS MULTI-PHOTO FLASH (1·5 IN.) (RED) TO C'C'T R FIG. 34

GDI-B T.B. 75 T.B.77

Nº1 Nº2 Nº3 Nº4 FUSELAGE BOMB SOCKETS

NOTE-PLUG ※ IS MOUNTED FORWARD ON THE DISTRIBUTOR PANEL AND PLUG ⊗ IS AFT OF THE PANEL

B8 GDI-B GDI-B B9 B10 R14 B4 B3 B2 B1

COIL B14 B9F B10F B4R B3R B2R B1R B8

R14 R15 TO C'C'T R FIG. 34

BOMB DOORS RELAY

B+ STBD A0 D0 B+ B7 T.B.78

PORT A0 D0 B7 B8 T.B. 79 B7 B8

BOMB DOORS MICRO SWITCHES

PILOT'S BOMB RELEASE PANEL MOD. 1423

(COCKPIT SWITCHING IN LIEU OF SELECTOR SWITCHBOX IN NOSE)

TO TERMINALS (B20) SWITCHES

INDICATOR LAMP

CONTAINER

ALTERNATIVE SWITCHING DISTRIBUTOR

SINGLE AND SALVO

NOTE-IN SAFE (EXCEPT IN JETTISON) POSITION ALL CONTACTS ARE OPEN

B19 B26 B25 B32 B23 B22 B21 B20 B19 B31 B24 GDI-B

AUTO DISTRIBUTOR, TYPE 7

Fig. 33. Bombs and photoflash 4·5 in.– B (post mod. 1116 and 1117)

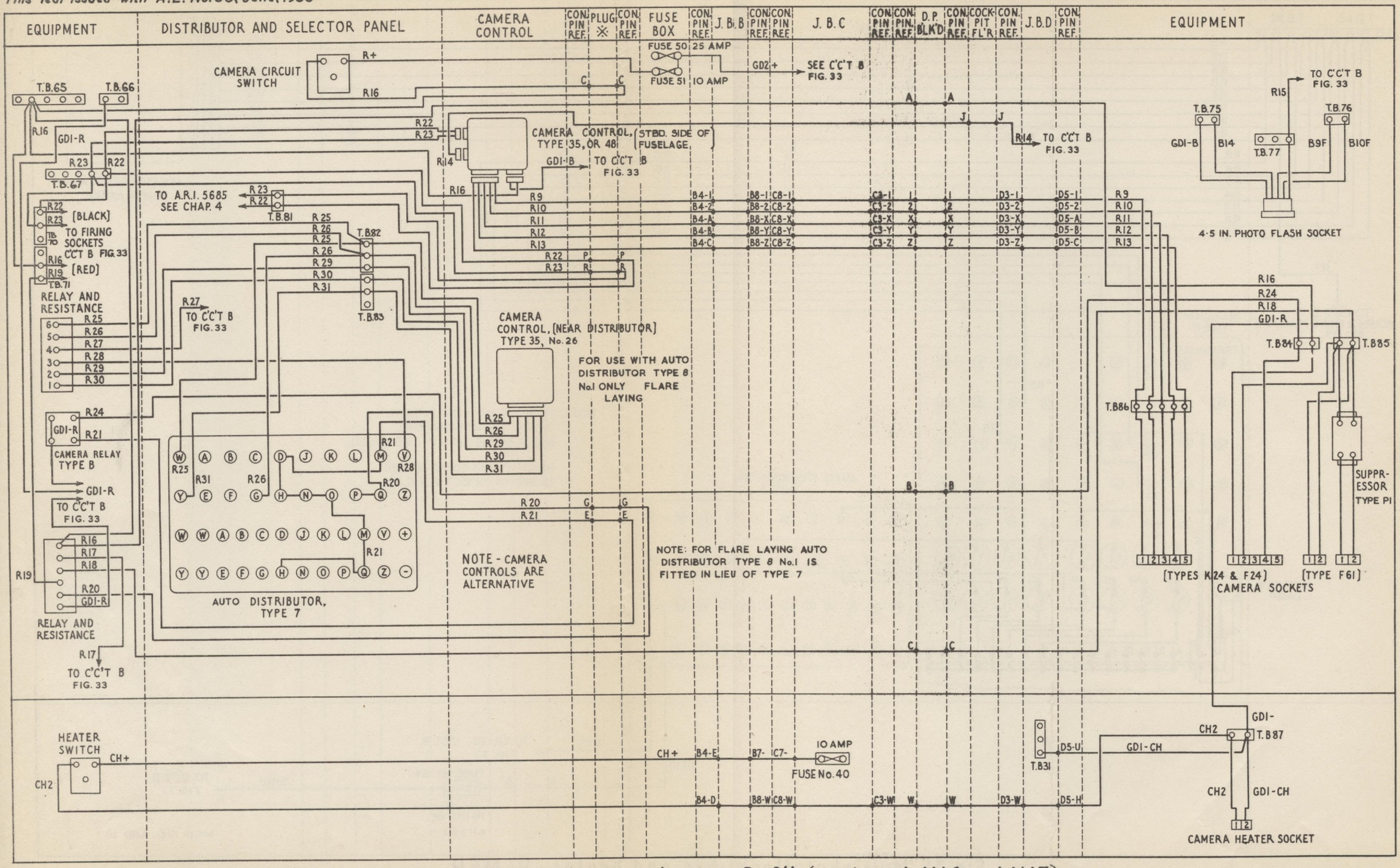

Fig. 34. Cameras and camera heater–R–CH (post mod. 1116 and 1117)

RESTRICTED

7923 59613 11/53 450 C.B.& S.LTD. GP.55

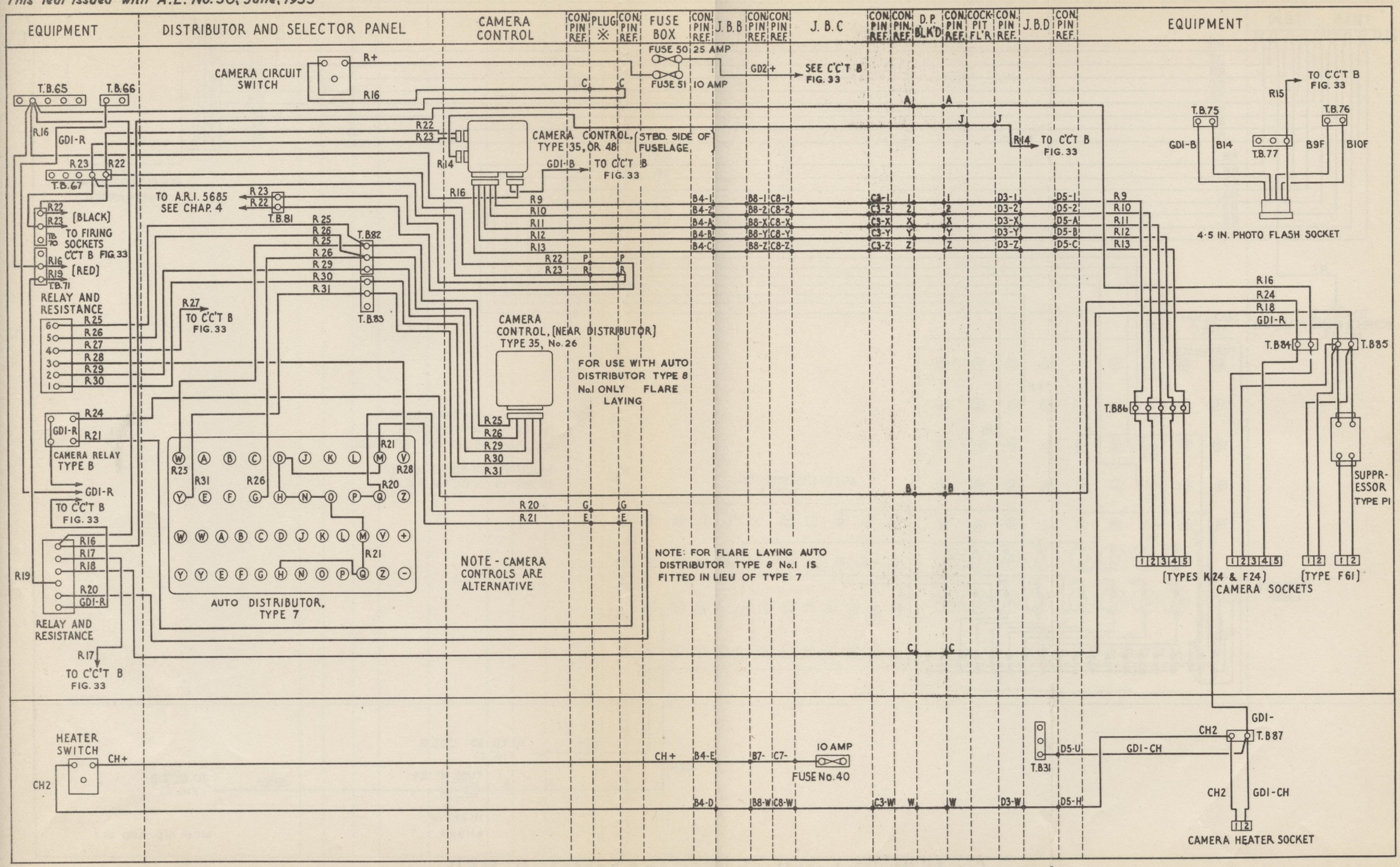

Fig. 34. Cameras and camera heater—R-CH (post mod. 1116 and 1117)

RESTRICTED

7923 58613 11/53 450 C.B.& S.LTD. Gp.55

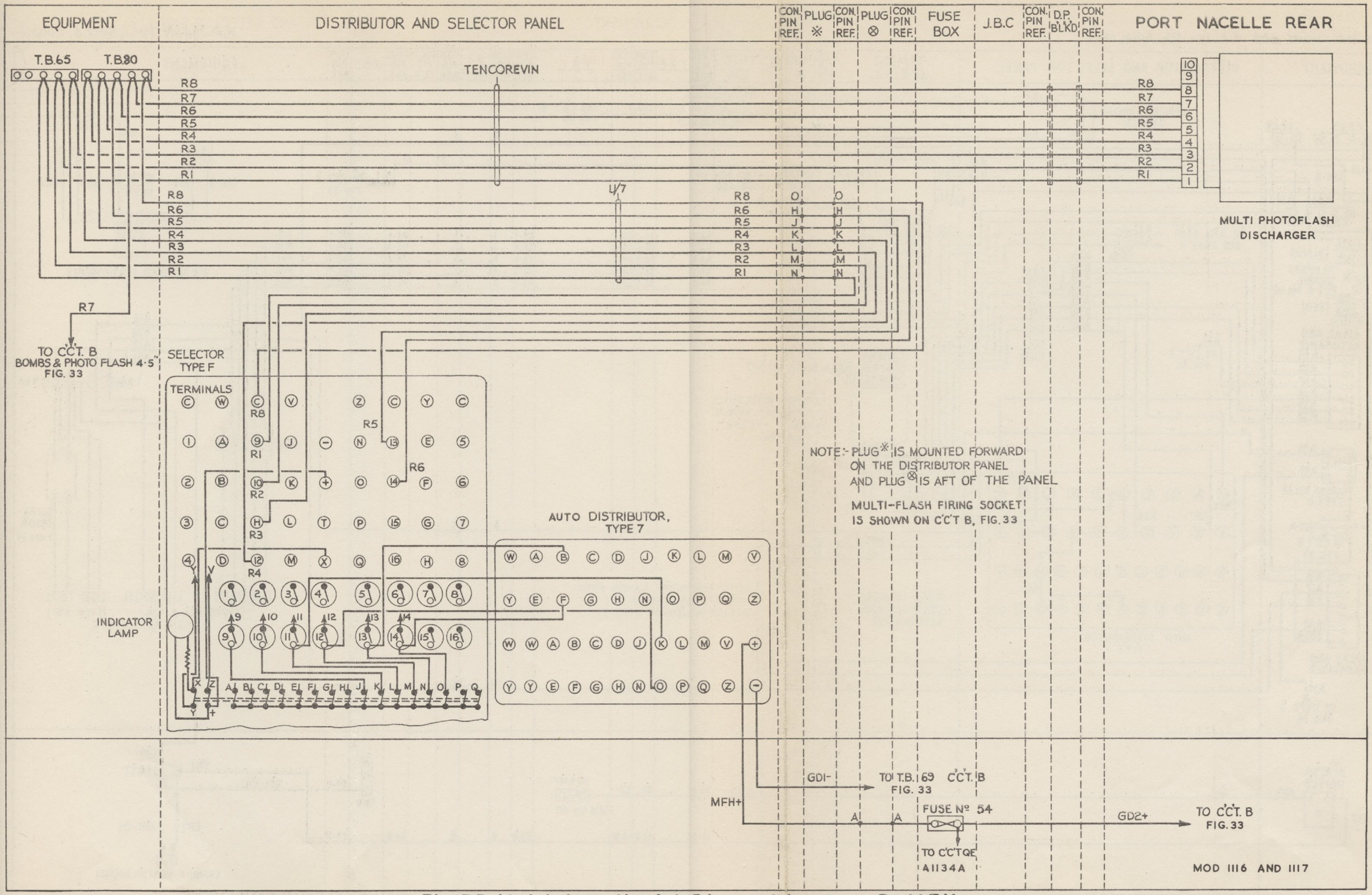

Fig.35. Multiphotoflash 1·5 in. and heater - R-MFH

Fig. 36. T.I. bombsight – BS. A.D.R.I.S. – AM – AP

RESTRICTED

7923 39613 11/53 450 C.B&S.Ltd. GP.55.

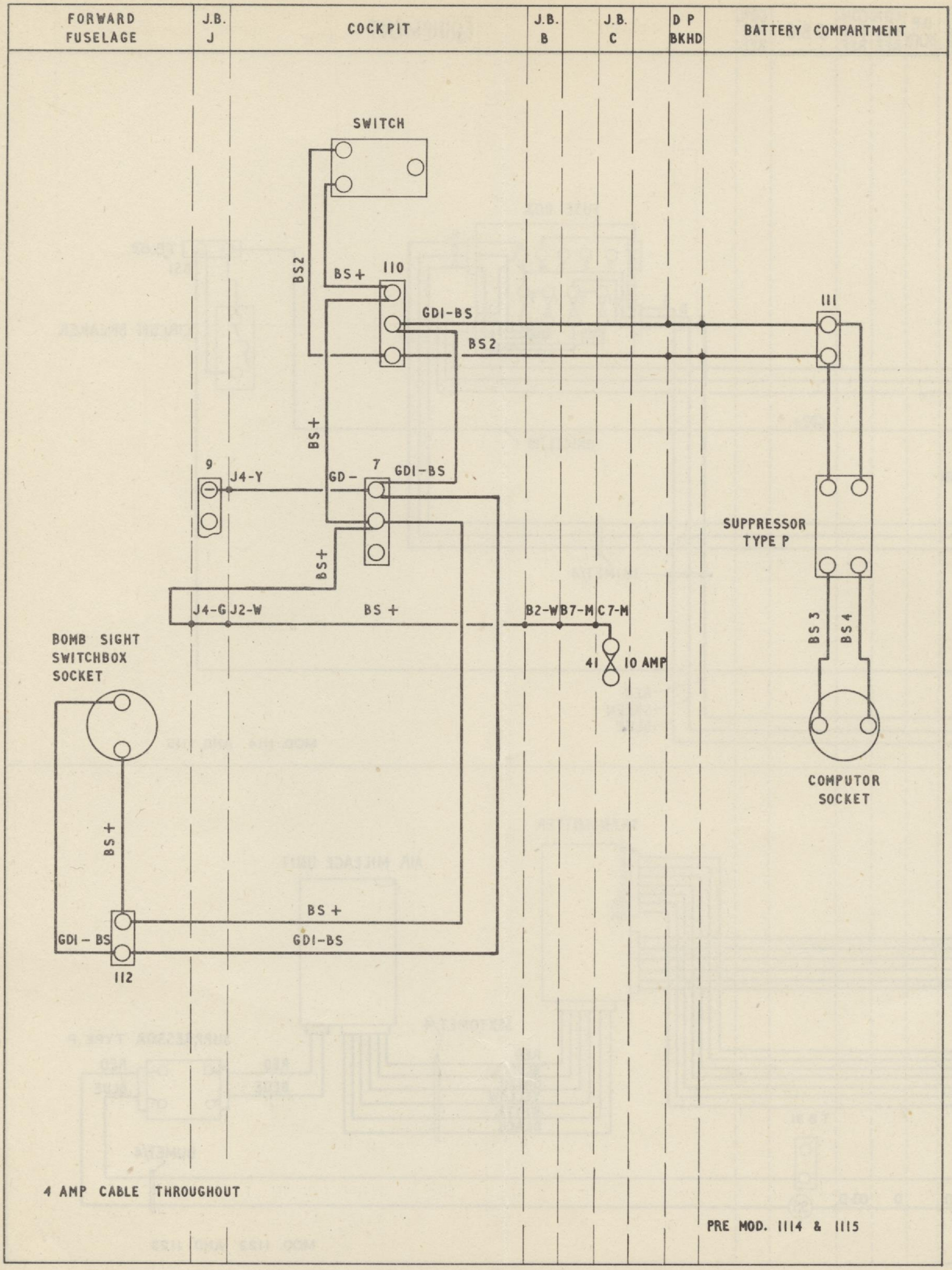

Fig.37. Mk.14 bombsight-BS

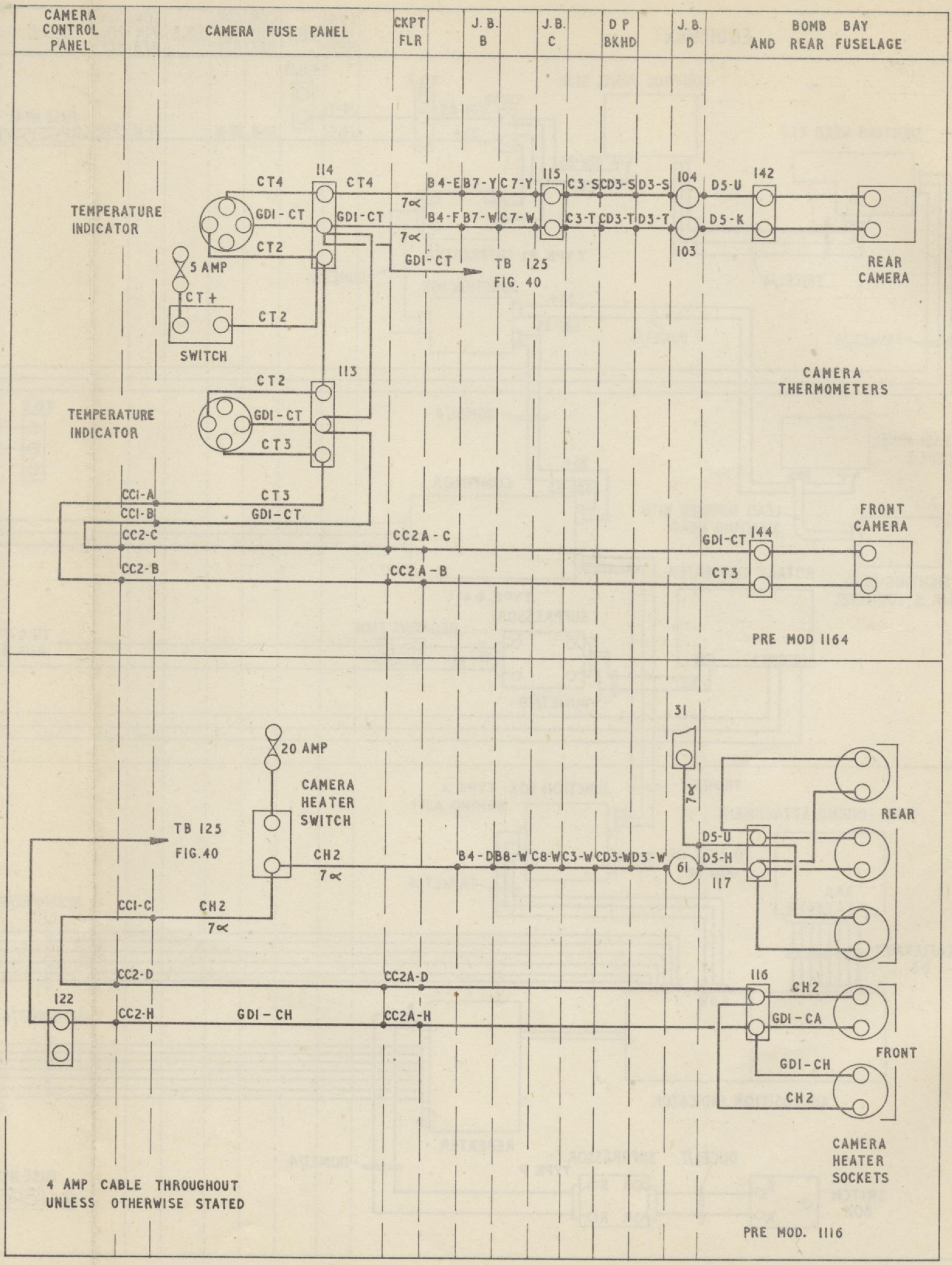

Fig.38. Camera thermometers and heaters-CT-CH

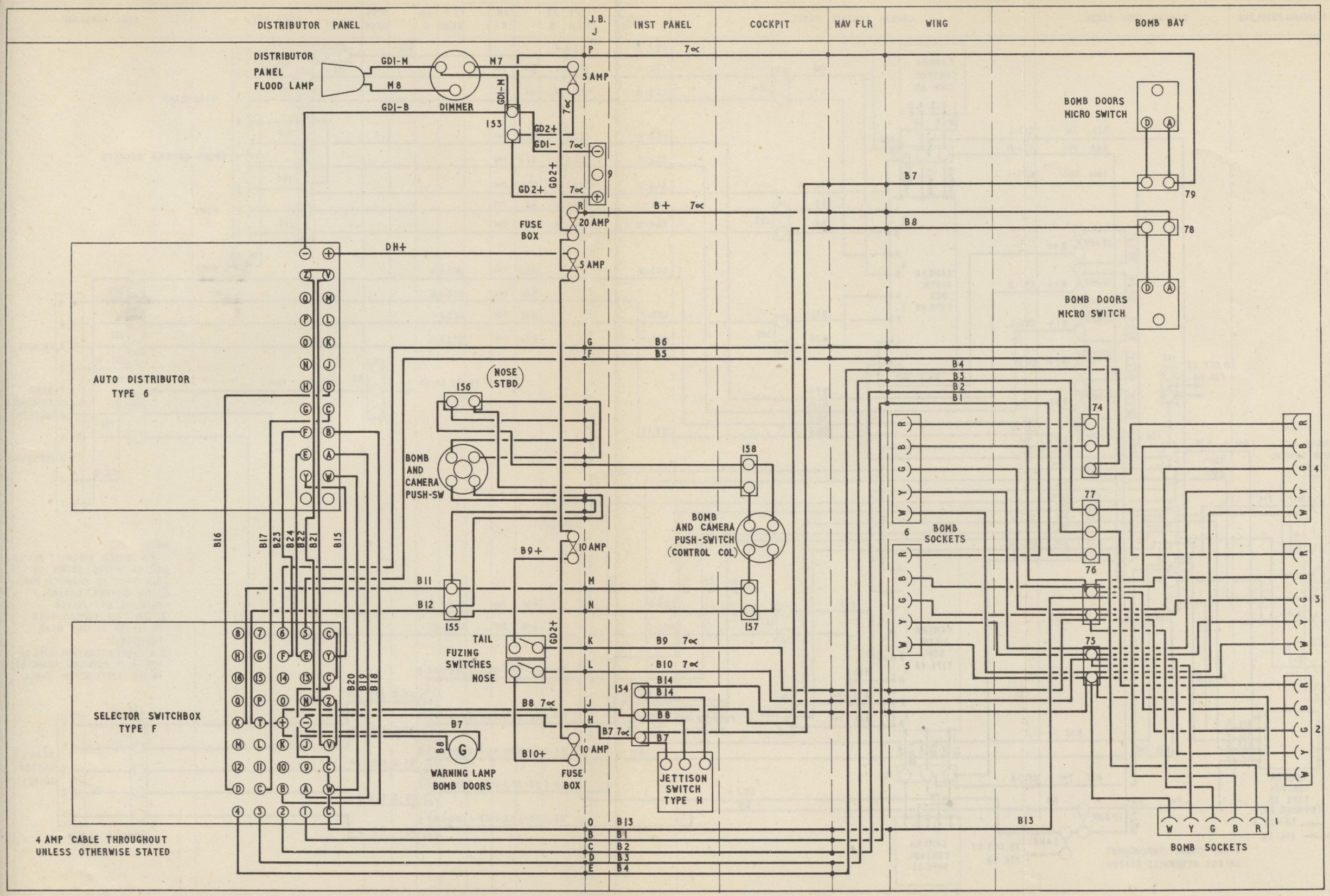

Fig. 39. Bombs—B (pre mod. 1116)

7923 59613 11/53 450 C.B.&S.LTD. GP.55.

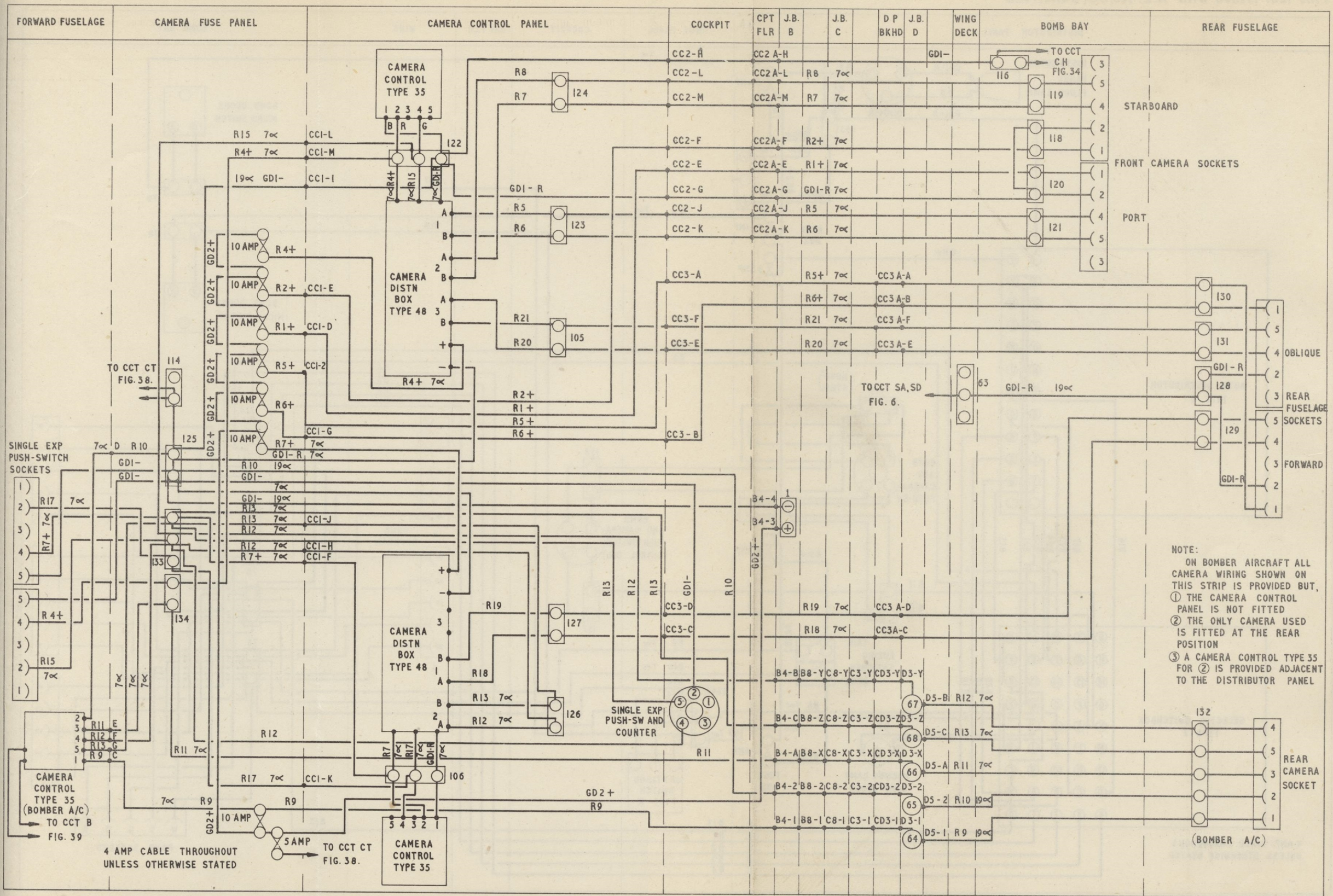

Fig. 40. Cameras – R (pre mod. 1116 and 1117)

RESTRICTED

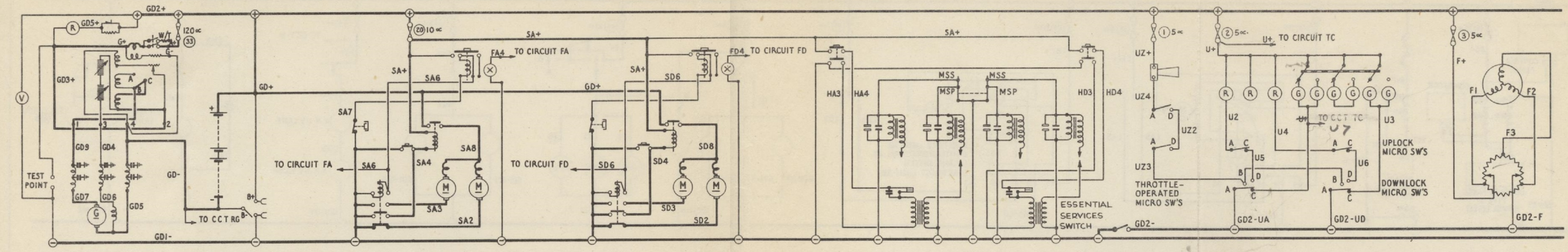

GD GENERATOR (STARB'D) & BATTERY

SA / SD STARTER AND FEATHERING

HA / HD IGNITION AND BOOSTER COILS

UZ UNDERCARRIAGE HORN
U UNDERCARRIAGE INDICATOR

F FLAP POSITION INDICATOR

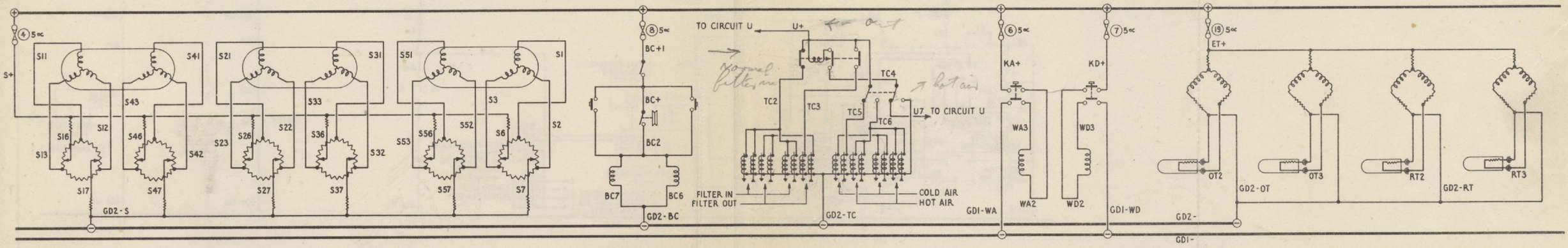

MOD 1068 AND 1163

S FUEL CONTENTS INDICATORS

BC SUPERCHARGER CONTROL

TC TROPICAL AIR INTAKE HOT & COLD AIR MOD 1248 OR 1249

WA / WD OIL DILUTION

OT OIL THERMOMETER

RT COOLANT THERMOMETER

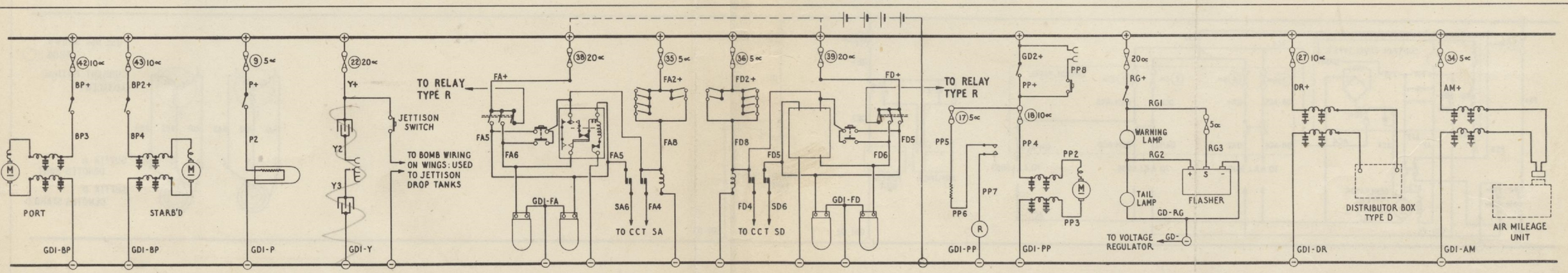

MOD 1416

MOD 1612 AND 1398

BP FUEL BOOSTER PUMPS

P PRESSURE HEAD HEATER

Y DINGHY & WING TANK JETTISON

FA FIRE EXTINGUISHER

FA2 / FD2 FIRE WARNING

FD FIRE EXTINGUISHER

PP FUEL PUMP (LONG RANGE A/C ONLY)

RG TRANSMITTER, TYPE F

DR COMPASS SUPPLY

AM A.D.R.I.S. SUPPLY

FIG. 41

SCHEMATIC DIAGRAM OF ELECTRICAL SERVICES

FIG. 41

RESTRICTED

7923 59613 11/53 450 C.B.&S.LTD. GP.55.

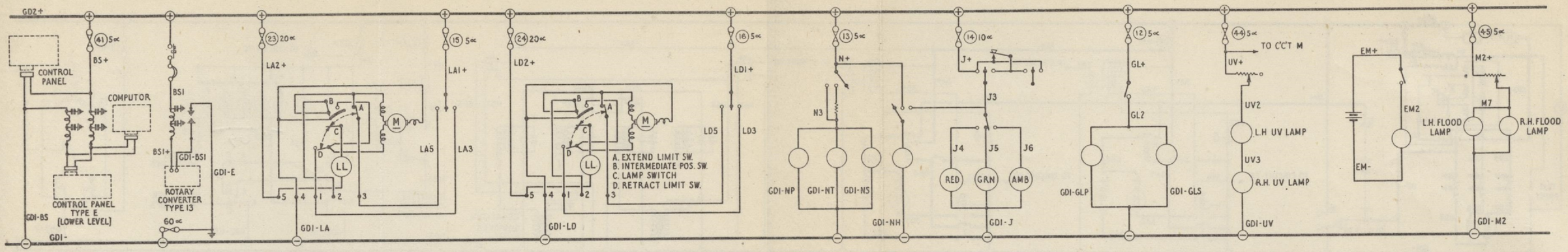

BSI BS T.1B BOMB SIGHT

LA LD LANDING LAMPS

N NAVIGATION LAMPS

J IDENTIFICATION LAMPS

GL RESIN LAMPS

UV U.V. LAMPS

EM EMERGENCY LAMP

M2 INTERIOR LAMPS

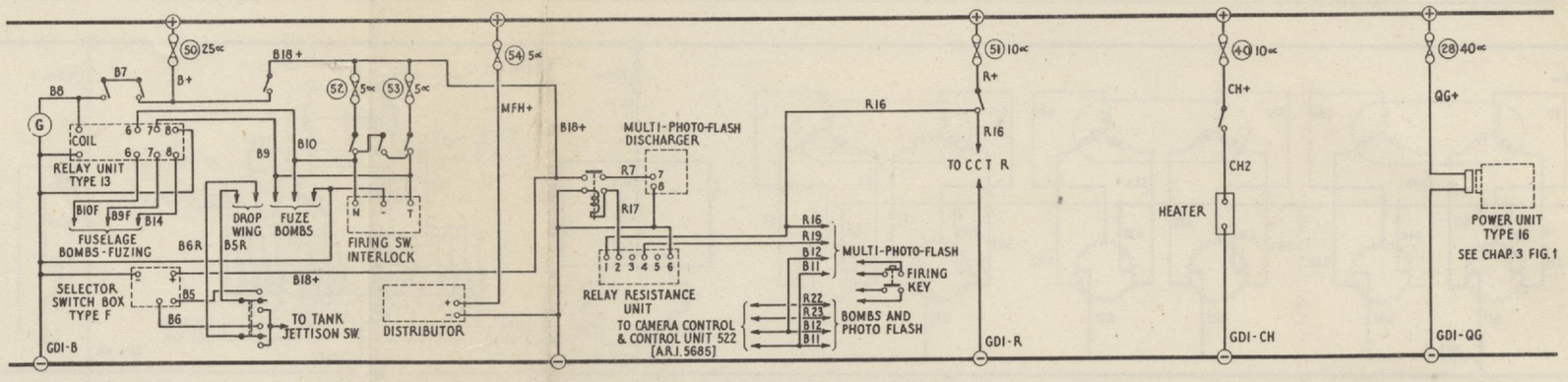

B BOMBS - PHOTO FLASH - MULTI-PHOTO-FLASH

MFH MULTI-PHOTO-FLASH HEATER

B BOMBS - PHOTO FLASH - MULTI-PHOTO-FLASH

R CAMERA SUPPLY

C CAMERA HEATER

QG T.R.1430 SUPPLY

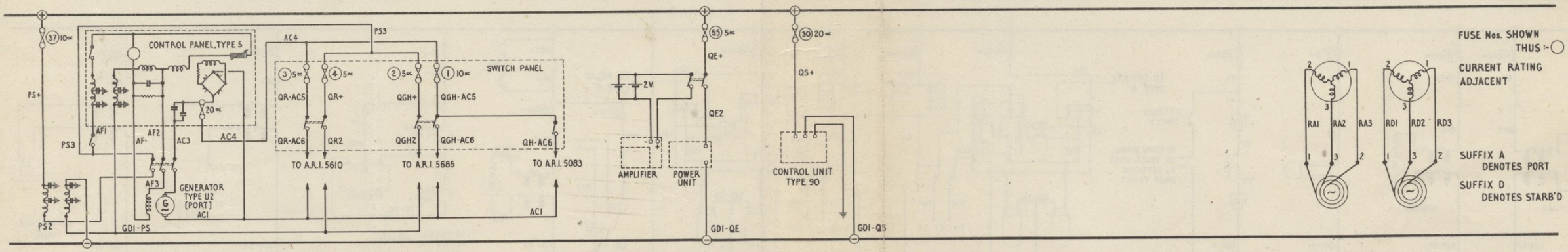

PS POWER SUPPLY

AC GENERATOR A.C. SUPPLY

QR A.R.I. 5610 SUPPLY

QGH A.R.I. 5685 SUPPLY

QH A.R.I. 5083 SUPPLY

QE A.1134 A SUPPLY

QS A.R.I. 5131 SUPPLY

RA RD TACHOMETER

FIG. 42

RESTRICTED

SCHEMATIC DIAGRAM OF ELECTRICAL SERVICES

FIG. 42

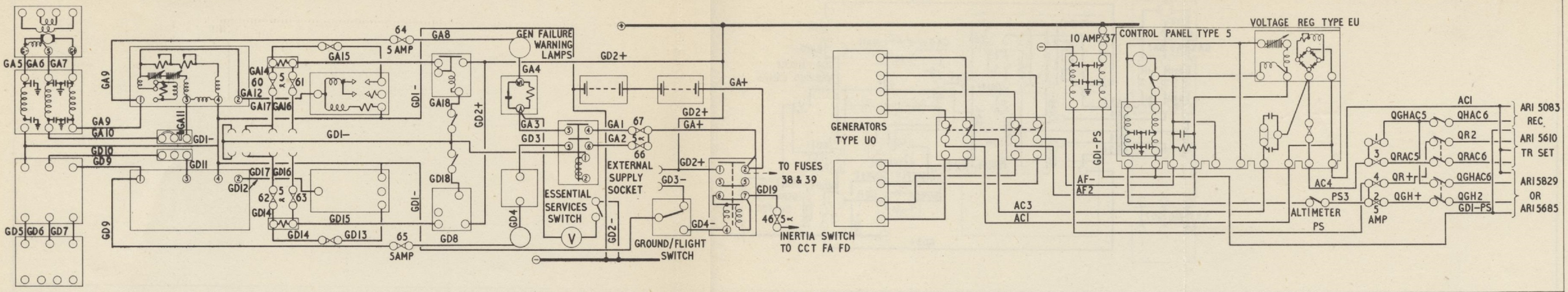

AC AND DC POWER SUPPLIES – TWIN UO (MOD 1428)

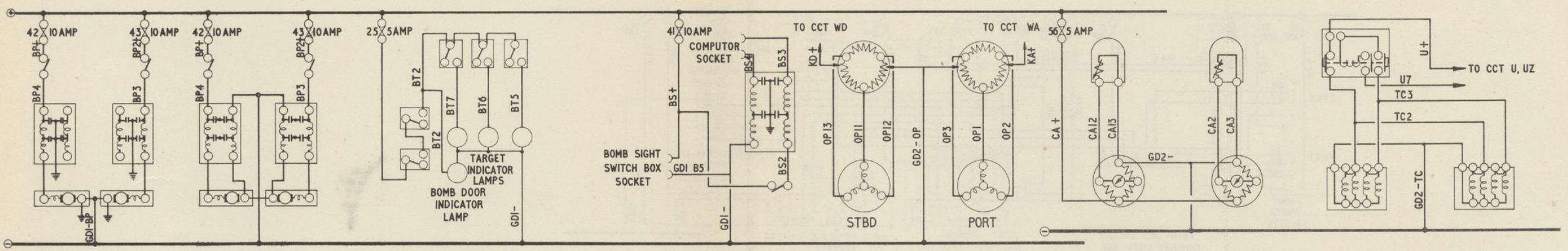

BP FUEL BOOSTER PUMPS

BT BANNER TOWING

BS BOMB SIGHT MK 14

OP OIL PRESSURE

CA INDUCTION CHARGE THERMOMETER

TC AIR INTAKE CONTROL

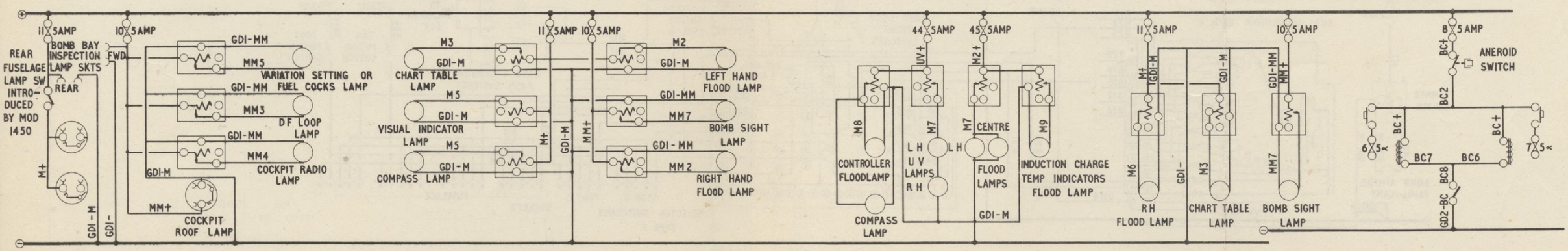

INTERIOR LIGHTING

INSTRUMENT LIGHTING

INSTRUMENT LIGHTING

BC SUPERCHARGER CONTROL

FIG.43

SCHEMATIC DIAGRAM OF ELECTRICAL SERVICES

RESTRICTED

FIG.43

7923 59613 11/53 450 C.B.&S.LTD. GP.55.

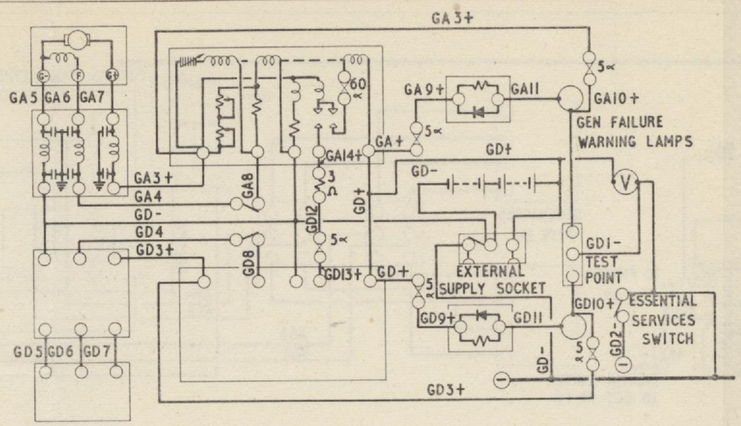

A.C. AND D.C. POWER SUPPLIES HX2 (MOD 1601)

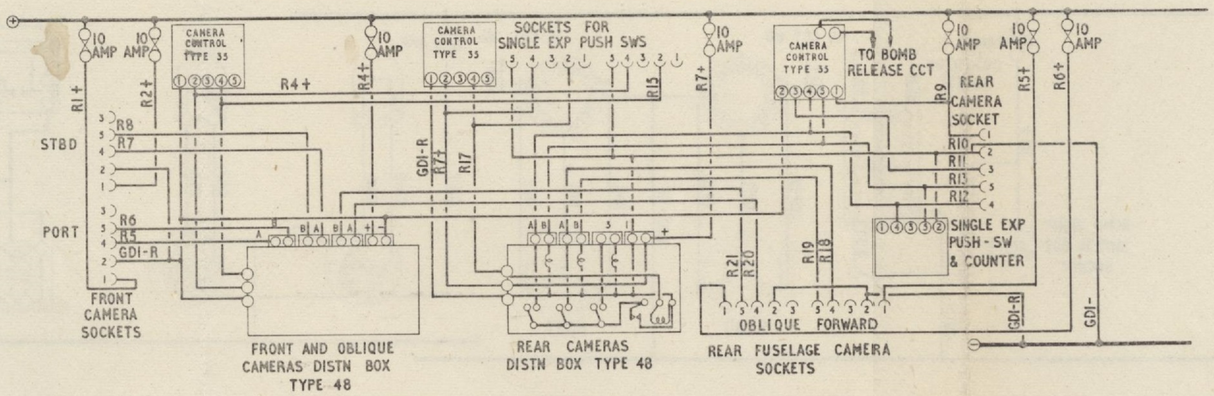

PRE MOD 1164, 1116 AND 1117

CAMERAS

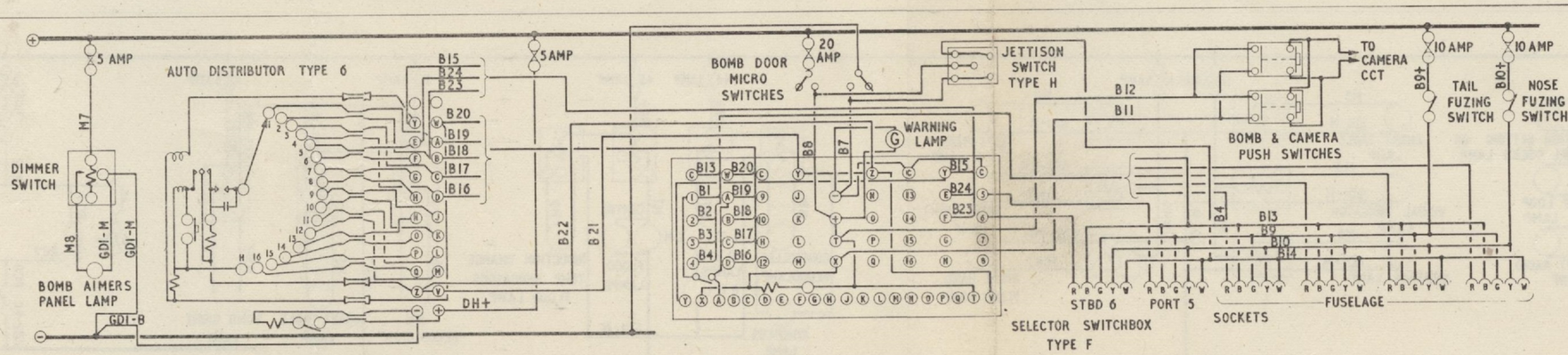

PRE MOD 1116 AND 1117

BOMBS

FIG. 44 SCHEMATIC DIAGRAM OF ELECTRICAL SERVICES FIG.44

CHAPTER 2

Note.—*The information previously issued with this chapter, now appears in Chapter 1*

CHAPTER 3

WIRELESS INSTALLATION

Chapter 3

WIRELESS INSTALLATION

LIST OF CONTENTS

	Para.		Para.
Introduction	1	*A.1134A*	5
T.R.1143	2	*T.R.1934—T.R.1935*	6
T.R.1430	3		

LIST OF ILLUSTRATIONS

	Fig.		Fig.
T.R.1143—QG	1	*A.1134A—QE, T.R.1934 and T.R.1935—QG—QG2*	3
T.R.1430—QG	2		

Introduction

1. Attention is drawn to the Introduction to this publication which defines the relevant modification standard for *unconverted* and *converted* aircraft. This chapter describes the wireless installation fitted in both the converted and unconverted aircraft. The T.B. numbers shown on the routing charts are for reference only and are used to identify the positions of the T.B.s in the location diagrams. The T.B.s are not numbered on the aircraft. To prevent confusion with the T.B. numbering used in the electrical chapter, the T.B.s in the wireless and radar chapters bear the suffix letter R, viz., T.B.R1 etc. All the equipment is fitted to standard type mountings and the aerials are also of standard fit. There should not be, therefore, any undue difficulty in their removal or installation.

T.R.1143

2. This is a 4-channel V.H.F. transmitter-receiver (used in conjunction with A.1271 for beam approach) and will only be found in unconverted aircraft. The transmitter-receiver, power unit, junction box and beam approach unit are located immediately aft of bulkhead No. 4. The controller and beam approach switch are mounted in the cockpit and the internal aerial for the T.R. 1143 is in the rear fuselage. The aerial for the beam approach is underneath the rear fuselage. The d.c. supply for the equipment is taken from fuse No. 28 in junction box C.

T.R.1430

3. This equipment is fitted on the embodiment of mod. 1167, as illustrated in fig. 2. The transmitter-receiver, Type T.R. 1430, and power unit, Type 16, are mounted aft of bulkhead No. 4, and a junction box, Type 93A, is mounted on the port side of the fuselage, near the transmitter-receiver. An aerial, Type 147, is mounted on the top of the fuselage, above the transmitter-receiver. A controller, Type 9, volume control, and the pilot's mic.-tel. socket are installed on the port side of the cockpit, and a press-to-transmit switch is fitted on the inboard throttle lever. The navigator's mic.-tel. socket and switch are fitted on the starboard side of the cockpit. The bomb aimer's mic.-tel. socket and switch are fitted in the nose of the aircraft. The d.c. supply is taken from fuse No. 28 in junction box C.

4. The mounting brackets for the transmitter-receiver and the power unit are suspended at the top on two slotted brackets and secured at the base by a wing-nut.

A.1134A

5. The crate containing the amplifier, Type A.1134A, power unit and battery, is mounted

on the port side of the fuselage behind bulkhead No. 4, just aft of the T.R. 1430. The amplifier is so connected to the T.R. 1430 that by the use of the press-to-transmit and press-to-mute switches, the crew can select intercommunication or wireless facilities.

T.R.1934—T.R.1935

6. This equipment is introduced by mod. 1446, and consists of two V.H.F. transmitter-receivers, each having 10 crystal-controlled channels. The sets occupy the same position as was previously occupied by the T.R. 1430. The aerials, Type 228 and 229, are located on the upper surface of the fuselage. A controller, Type 382, and a press-to-mute switch, are mounted at the pilot's station. Mic.-tel. sockets and press-to-transmit switches are fitted at the pilot's and navigator's stations. The interconnection diagram incorporating the A.1134A installation is given in fig. 3.

8401 71508 3/54 450 C.B.&S.LTD. GP.30

ITEM	STORES REF.	DESCRIPTION
1	10A/12649	JUNCTION BOX 17-SERIES TYPE 17A
2	10K/37	POWER UNIT, TYPE 16
3	10D/52	TRANSMITTER RECEIVER-TR1143
4	10D/549	AMPLIFIER, TYPE A1271-BEAM APPROACH
5	10J/26	CONTROLLER, TYPE 3
6	10F/1036	SWITCH UNIT, TYPE 81
7		AERIAL TR1143
8	10B/496	AERIAL SYSTEM, TYPE 62-BEAM APPROACH
9	5E/1328	CABLE DUMET 4
10	5E/1351	CABLE TRIMET 4
		CONNECTORS
11	10H/3219	AERIAL-TYPE 234/13
12	10H/3229	TYPE 212/18
13	10H/3222	TYPE 211/19
14	10H/3226	TYPE 216/19
15	10H/5638	TYPE 213/34
16	10H/5369	TYPE 2135/CT/73
17	10H/3228	TYPE 692/18
18	10H/3224	TYPE 214/18
19	10H/3225	TYPE 971/6
20	10H/5648	TYPE 713/29
21	10H/5641	TYPE 690/29

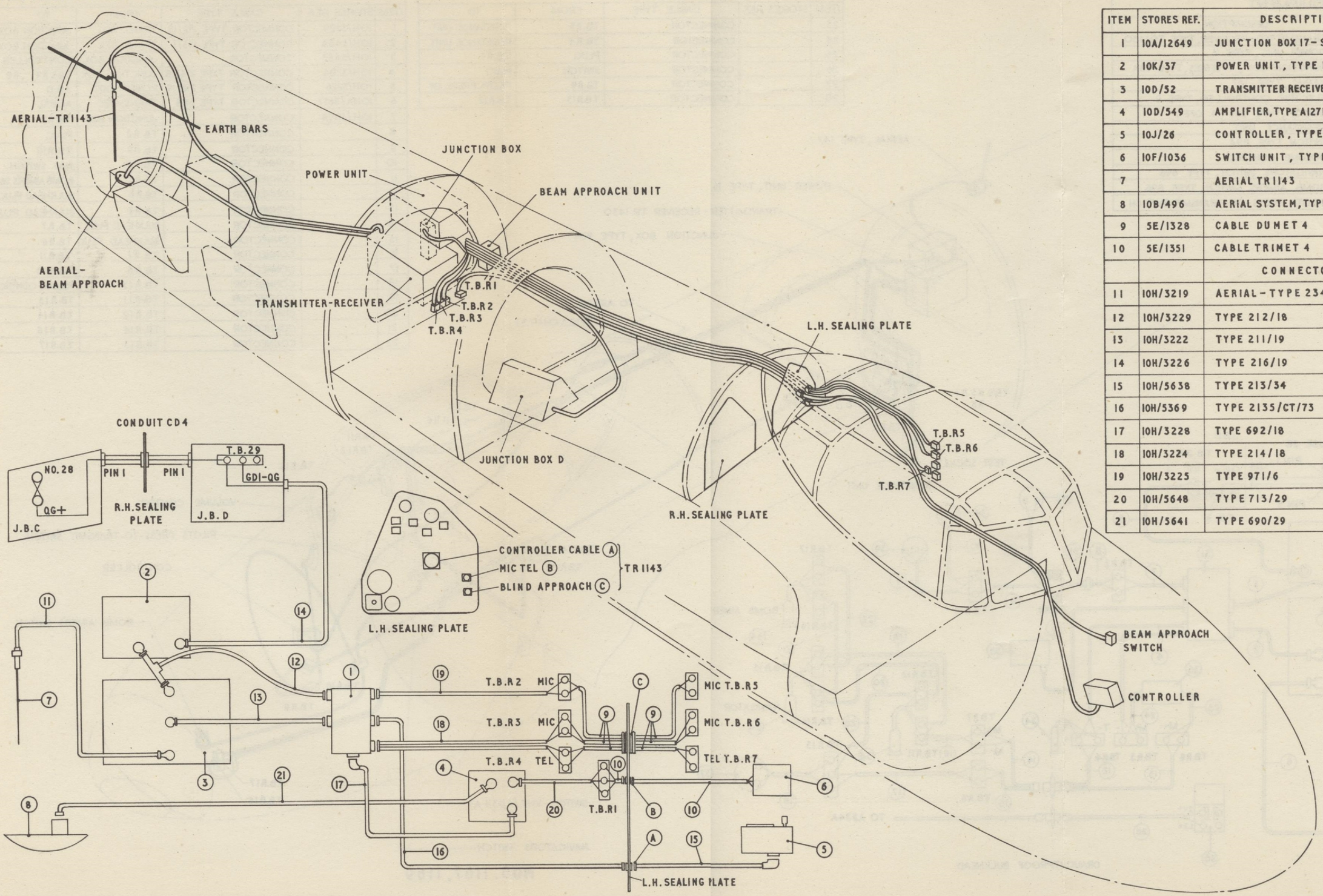

Fig. 1. T.R. 1143 - QG

8402 71509 3/54 450 C.B&S.LTD. GP.55.

EQUIPMENT		
ITEM	STORES REF.	DESCRIPTION
29	10D/1055	TRANSMITTER-RECEIVER, TYPE T.R.1430
30	10K/37	POWER UNIT, TYPE 16
31	10A/14788	JUNCTION BOX, 17 SERIES, TYPE 93A
32	10B/13339	AERIAL, TYPE 147
33	10J/85	ELECTRIC CONTROLLER, TYPE 9
34	10H/2206	SOCKET, TYPE 359 (4 OFF)
35	5C/2970	RESISTANCE UNIT
36	10H/13236	SWITCH, TYPE 894
37	10L/240	VOLUME CONTROL
38	10F/13238	NAVIGATOR'S SWITCH, TYPE 896
39	10F/13238	BOMB AIMER'S SWITCH, TYPE 896
40	5C/534	PILOT'S PRESS-TO-TRANSMIT SWITCH

CONNECTORS				
ITEM	STORES REF.	CABLE TYPE	FROM	TO
23		CONNECTOR	T.B.R3	RESISTANCE UNIT
24		CONNECTOR	T.B.R4	RESISTANCE UNIT
25		CONNECTOR	PLUG	T.B.R9
26		CONNECTOR	SWITCH	PLUG
27		CONNECTOR	T.B.R9	PILOT'S PRESS SW.
28		CONNECTOR	T.B.R13	T.B.R12

CONNECTORS				
ITEM	STORES REF.	CABLE TYPE	FROM	TO
1	10H/3229	CONNECTOR TYPE 212/18	TRANS.-REC.	JUNCTION BOX
2	10H/5454	CONNECTOR TYPE 155/1	TRANS.-REC.	JUNCTION BOX
3	10H/5455	CONNECTOR	JUNCTION BOX	CONTROLLER
4	10H/3224	CONNECTOR TYPE 214/18	JUNCTION BOX	T.B'S R4 , R8
5	10H/3226	CONNECTOR TYPE 216/19	POWER UNIT	J.B.D
6	10HA/3617	CONNECTOR TYPE 684	TRANS.-REC.	AERIAL
7	10H/1894	CONNECTOR	JUNCTION BOX	T.B.R2
8		CONNECTOR	T.B.R2	PLUG
9		CONNECTOR	T.B.R9	T.B.R10
10		CONNECTOR	T.B.R10	NAV. SWITCH
11		CONNECTOR	T.B.R2	BOMB AIMER'S SW.
12		CONNECTOR	T.B.R8	BULKHEAD PLUG
13		CONNECTOR	T.B.R3	BULKHEAD PLUG
14		CONNECTOR	BULKHEAD PLUG	T.B.R7
15		CONNECTOR	BULKHEAD PLUG	T.B.R6
16		CONNECTOR	T.B.R7	T.B.R11
17		CONNECTOR	T.B.R6	T.B.R13
18		CONNECTOR	T.B.R13	VOLUME CONTROL
19		CONNECTOR	T.B.R11	T.B.R15
20		CONNECTOR	T.B.R12	T.B.R14
21		CONNECTOR	T.B.R14	T.B.R16
22		CONNECTOR	T.B.R15	T.B.R17

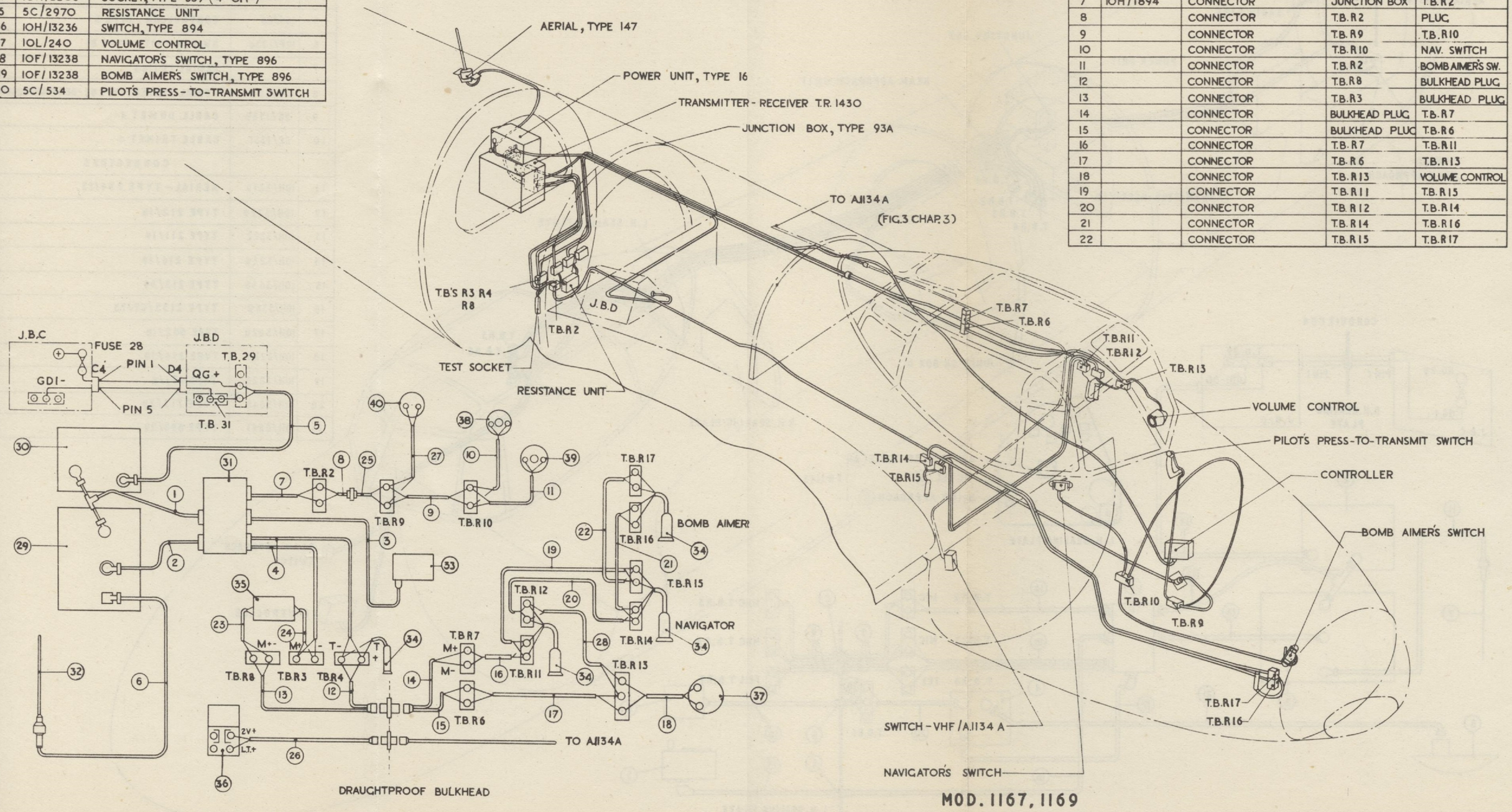

Fig. 2. T.R.1430 - QG

ITEM No	REF. No.	DESCRIPTION
36	5J/1387	BATTERY
37		CONNECTOR
		PICK-UP SOCKET

ITEM No	REF. No.	DESCRIPTION
22	10HA/9253	CONNECTOR
23	5C/430	TERMINAL BLOCK, 2-WAY
24	5C/432	TERMINAL BLOCK, 3-WAY
25	5E/1328	DUMET 4 CABLE
26		DUMET 7 CABLE
27		DUMET 19 CABLE
28		DUCEL 7 CABLE
29		UNICEL 4 CABLE
30		UNIMET 4 CABLE
31		CABLE LINK
32	10H/2206	PILOT'S TEL-MIC SOCKET
33	10H/2206	NAVIGATOR'S TEL-MIC SOCKT
34	10U/90	AMPLIFIER, A1134A
35	10K/293	POWER UNIT, TYPE 173

ITEM No	REF. No.	DESCRIPTION
1	10B/16574	AERIAL, TYPE 228
2	10B/16621	AERIAL, TYPE 229
3		REFLECTOR PLATE
4		REFLECTOR PLATE
5	10D/17693	T.R. 1934 V.H.F.
6	10D/17694	T.R. 1935 V.H.F.
7	5C/3943	RELAY, TYPE 52
8	10F/2312	RELAY, TYPE 102
9	10L/246	CONTROLLERS, TYPE 382
10	10F/11714	SWITCH, EMERGY. I/COMM.
11	10F/13238	SWITCH
12	10F/13236	SWITCH
13	10D/13336	DISTRIBUTION PANEL
14	10A/13157	MATCHING UNIT
15	10HA/9238	CONNECTOR
16	10HA/9239	CONNECTOR
17	10HA/9248	CONNECTOR
18	10HA/9249	CONNECTOR
19	10HA/9250	CONNECTOR
20	10HA/9251	CONNECTOR
21	10HA/9252	CONNECTOR

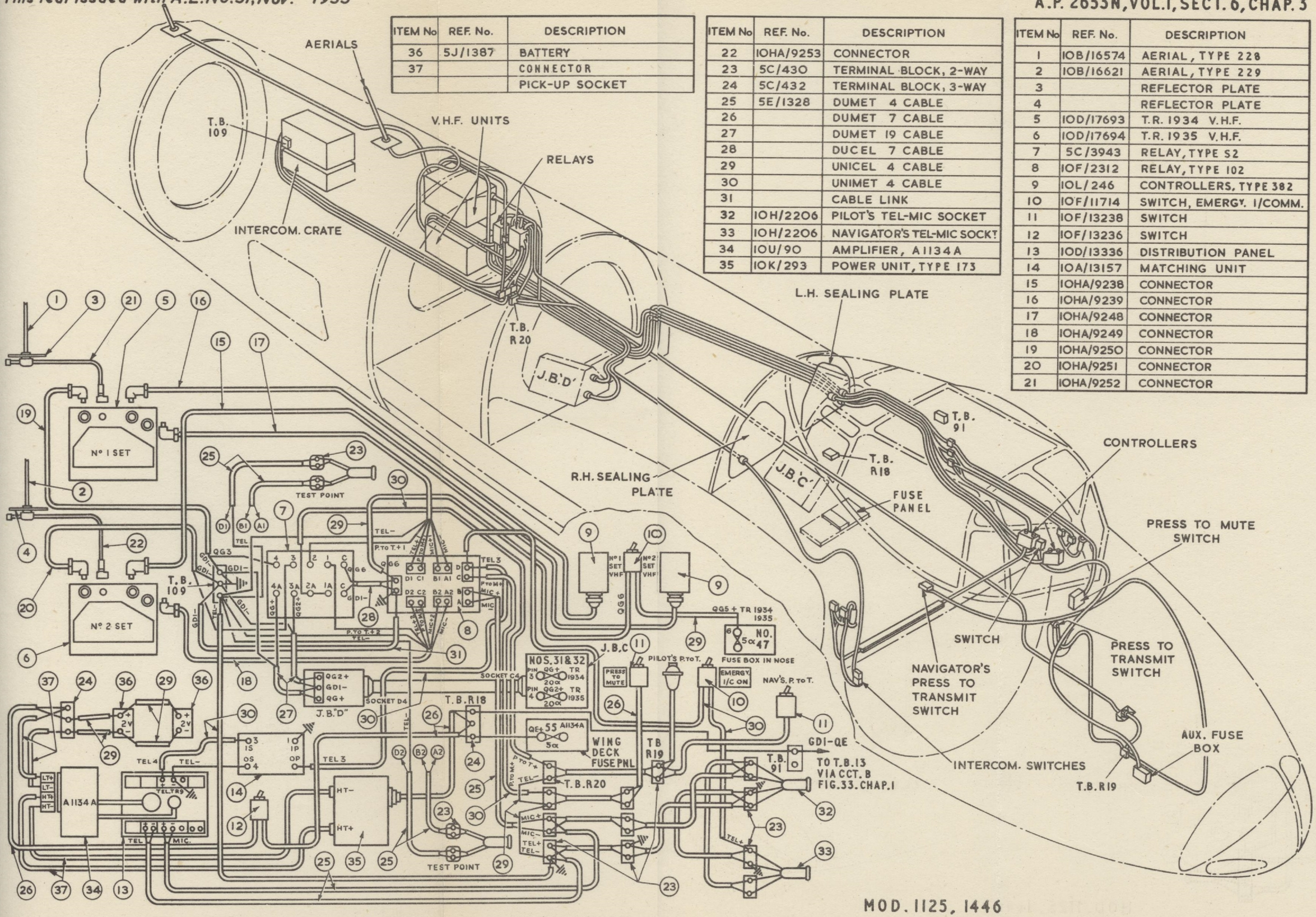

Fig. 3. A.1134A - QE, T.R.1934 and T.R.1935 - QG - QG2

8402 71509 3/54 450 C.B&S.LTD. GP.55.

CHAPTER 4

RADAR INSTALLATION

Chapter 4

RADAR INSTALLATION

LIST OF CONTENTS

	Para.		Para.
Introduction	1	A.R.I. 5685	6
I.F.F. installations	2	A.R.I. 5610	7
A.R.I. 5083	4		

LIST OF ILLUSTRATIONS

	Fig.		Fig.
A.R.I.5131—QS	1	A.R.I.5083—QH (unconverted aircraft)	4
A.R.I.5025—QS	2	A.R.I.5610—QR	5
A.R.I.5083—QH (converted aircraft)	3	A.R.I.5685—QGH	6

Introduction

1. Attention is drawn to the Introduction to this publication, which defines the relevant modification standard of *converted* and *unconverted* aircraft. This chapter describes the radar installations fitted in both converted and unconverted aircraft. The equipment is fitted to standard mountings and the aerials are of standard fit. The removal and installation should not, therefore, be difficult. The T.B. numbering shown in the routing charts is for reference only and is used to identify the positions of the blocks in the location diagrams. The T.B.s are not numbered on the aircraft. To prevent confusion with the numbers used in the electrical chapter, the suffix letter R has been added, viz, T.B.R1 etc. Unconverted aircraft with mod. 1601 (twin HX2 generators) have no a.c. source of supply.

I.F.F. INSTALLATIONS

2. The original I.F.F. installation, A.R.I. 5025, fitted to the aircraft incorporated either a receiver, Type R.3067 or Type R.3090, fitted on the port side of the fuselage forward of bulkhead No. 4. The control units are located on the starboard side of the cockpit aft, and the aerial, Type 90, is fitted to the undersurface of the rear fuselage.

3. Mod. 1033 substitutes A.R.I.5131 for A.R.I.5025. It has generally a similar layout, the receiver, Type R.3121, being fitted in place of the Type R.3067 or Type 3090 receiver. The control units, Types 89 and 90, are mounted near the starboard side of the cockpit canopy. The plug and socket connection for the power supply is located at the rear of these units.

A.R.I.5083

4. This installation is fitted to converted aircraft only. If it is to be fitted in unconverted aircraft, then a source of a.c. supply will have to be found, as the a.c. generator, Type R, is removed from the aircraft when twin HX 2 generators are fitted by mod. 1601. Interconnection diagrams (*fig.* 3 *and* 4) are given for both installations.

5. The receiver, Type R.1355, is fitted on the wing-deck (port side) and has two R.F. units, one (Type R.F.27) incorporated in the receiver and the other (Type R.F.25) mounted on the outside, and connected to it by cables. The change-over from one R.F. unit to the other is effected by means of a switch on the set. The indicator unit, Type 62, is mounted on the right-hand side of the navigator's platform. The aerial, Type 329, is fitted in the cockpit canopy. The a.c. and d.c. supplies are taken from the switchbox on the starboard side of the cockpit. This equipment is an alternative fit to A.R.I.5685.

A.R.I.5685

6. The indicating unit, Type 166, and control unit, Type 426, are contained in a crate in front of the navigator's platform. This crate may be raised to the operating

position or lowered for stowing. An indicating unit, Type 237, is mounted on the left-hand side of the instrument panel. A receiver, Type R.3582, (containing an R.F. unit, Type R.F.27), an R.F. unit, Type 25, control unit, Type 522, and a junction box, Type 255, are mounted forward on the wing-deck. An aerial, Type 361, and a drive unit, Type 114, are mounted at the rear of the wing-deck. A strobe unit, Type 61, is suspended from the fuselage roof, behind bulkhead No. 3. A filter unit, Type 190, junction box, Type 266, and test points are located at the lower rear face of bulkhead No. 4. The aerial, Type 329, is mounted in the canopy top, and the transmitter-receiver, Type 1629, is mounted on the rear fuselage floor. The a.c. and d.c. supplies for this installation are taken from the switch box on the starboard side of the fuselage. This equipment is an alternative fit to A.R.I.5083.

A.R.I.5610

7. The transmitter-receiver, Type 3624, is mounted on the floor of the battery compartment in front of bulkhead No. 4. The connectors leading to the aerials are taken to an aerial panel on the front right-hand side of the same bulkhead, and thence to the wing aerials through plugs and sockets fitted at the rear of the wing-deck. Aircraft aerials, Type 345 and 344, are fitted in the port and starboard wing tips, respectively. The aerial, Type 345 (port), comprises three aerials—Types 53 (di-pole), 319 (reflector), and 53 (director)—and an impedance matching unit, Type 256. The starboard, aerial, Type 344, also comprises three aerials—Types 53 (di-pole), 54 (director), and 320 (reflector), and an impedance matching unit, Type 261. An aircraft transmitting aerial, Type 312, is fitted underneath the nose of the aircraft.

8. A control unit, Type 256, which contains all the manual and pre-set controls necessary for the operation of the equipment in the air and for daily servicing on the ground, is mounted on the starboard side of the cockpit near the canopy. The indicating unit, Type 208, consists solely of a cathode-ray tube which can be extracted from the front of the unit without removing the unit from its mounting. The a.c. and d.c. power supplies are taken from two 5-amp. fuses, No. 3 and 4, in the switch panel on the starboard side of the cockpit.

8403 68972 3/54 450 C.B.&S.LTD. GP.30

CONNECTORS				
ITEM	STORES REF.	CABLE TYPE	FROM	TO
17	10H/2725	CONNECTOR, TYPE 843	RECEIVER	AERIAL
18	5E/1368	CONNECTOR	CONTROL UNIT	PLUG

EQUIPMENT		
ITEM	STORES REF.	DESCRIPTION
1	10DB/570	RECEIVER, TYPE R.3121
2	10LB/90	CONTROL UNIT, TYPE 89
3	10LB/91	CONTROL UNIT, TYPE 90
4	5C/432	TERMINAL BLOCK (3-WAY) (124)
5	5C/543	SWITCH BOX, TYPE B
6	10H/254	PLUG, TYPE 172 (5-POINT)
7	10H/13079	SOCKET, TYPE 395 (5-POINT)
8	10H/258	PLUG, TYPE 174 (7-POINT)
9	10H/256	SOCKET, TYPE 105 (7-POINT)
10	10H/261	SOCKET, TYPE 108 (3-POINT)
11	10F/7741	MORSE KEY, TYPE 'F'
12	10BB/867	AERIAL, TYPE 90
13	10F/11714	SWITCH, TYPE 170
14	10F/13120	SWITCH, TYPE 495A (4-POLE, 3 WAY)
15	10H/262	PLUG, TYPE 176 (3-POINT)
16	10F/1651	SWITCH, TYPE 495/11 (LABEL INDICATING)

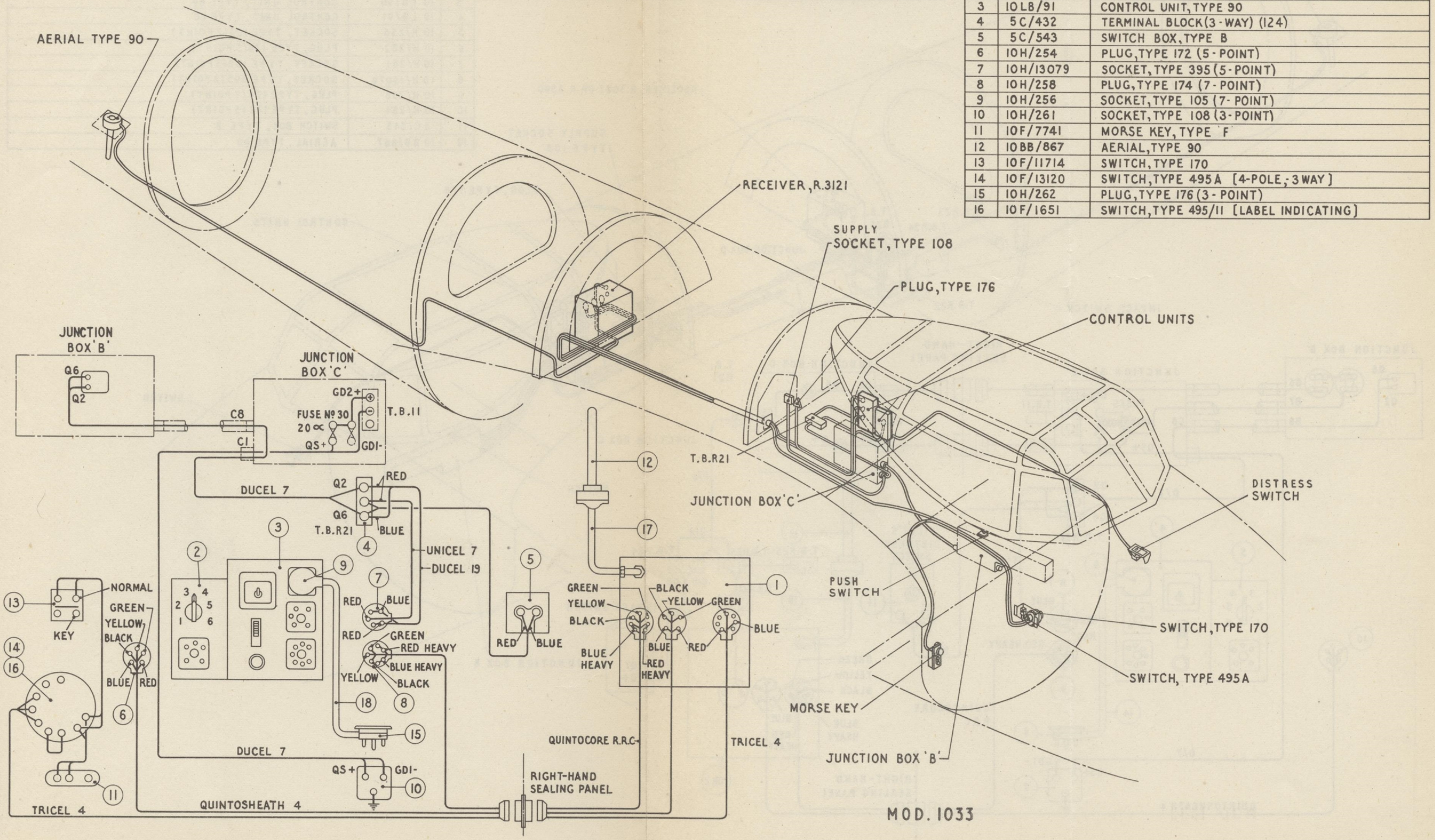

Fig. 1. ARI 5131 - QS

8404 68973 3/54 450 C. B&S LTD. GP.55.

	CONNECTORS			
ITEM	STORES REF.	CABLE TYPE	FROM	TO
13	10 H/2725	CONNECTOR, TYPE 843	RECEIVER	AERIAL
14	5 E/1368	CONNECTOR	CONTROL UNIT	PLUG

	EQUIPMENT	
ITEM	STORES REF.	DESCRIPTION
1	10 DB/293	RECEIVER, TYPE R.3067
2	10 DB/444	RECEIVER, TYPE R.3090
3	10 LB/90	CONTROL UNIT, TYPE 89
4	10 LB/91	CONTROL UNIT, TYPE 90
5	10 H/256	SOCKET, TYPE 105 (7 POINT)
6	10 H/262	PLUG, TYPE 176 (3 POINT)
7	10 H/261	SOCKET, TYPE 108 (3 POINT)
8	10 H/13079	SOCKET, TYPE 395 (5 POINT)
9	10 H/258	PLUG, TYPE 174 (7 POINT)
10	10 H/254	PLUG, TYPE 172 (5 POINT)
11	5 C/543	SWITCH BOX, TYPE B
12	10 BB/867	AERIAL, TYPE 90

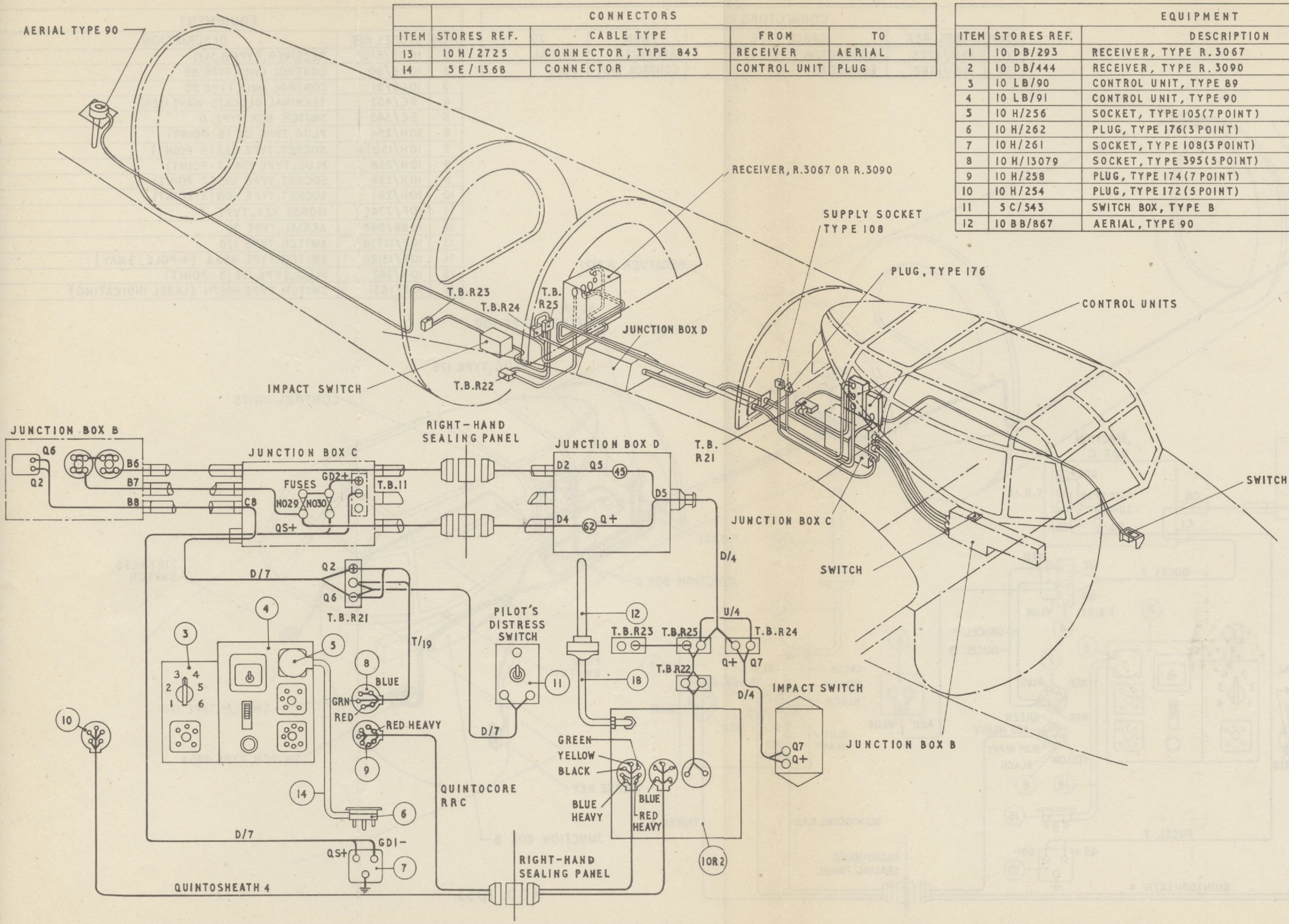

Fig.2. ARI 5025 - QS

RESTRICTED

NOTE.

NUMBERS SHOWN THUS (34) CORRESPOND TO ITEM Nos ON END OF CONNECTORS

CONNECTOR SET STORES REF. Nº 10 HA/7043

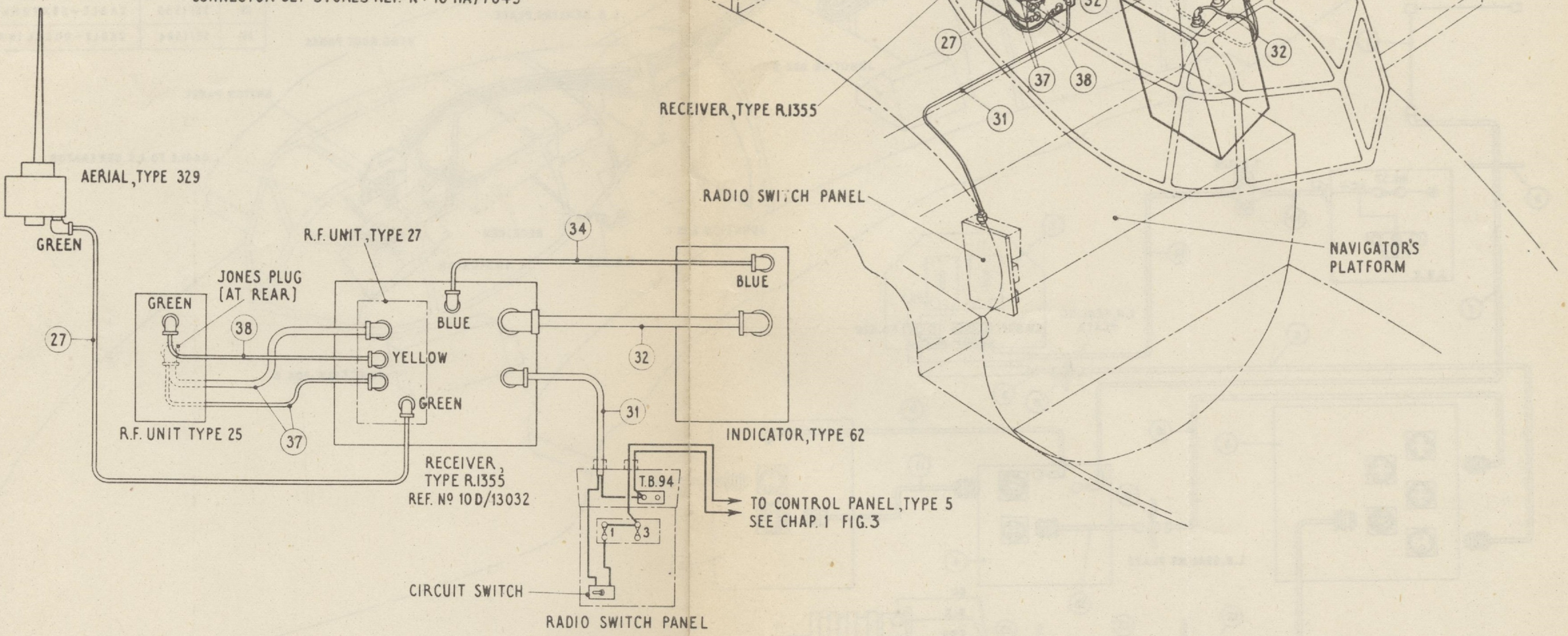

Fig. 3. ARI 5083 - QH (converted aircraft)

8404 68973 3/54 450 C.BAS.LTD. GP.55.

ITEM	STORES REF.	DESCRIPTION
1		AERIAL
2		SWITCH PANEL
3	5U/1269	CONTROL PANEL – TYPE 3
4	10D/13032	RECEIVER, TYPE 1355
5	10Q/13000	INDICATOR UNIT, TYPE 62
6	5U/349	A.C. GENERATOR
7	10H/	CONNECTOR
8	5E/1349	CABLE – DUMET/19 AMP.
9	10H/	CONNECTOR, TYPE 844
10	10H/	CONNECTOR, TYPE 674
11	10H/	CONNECTOR, TYPE 676
12	10H/	CONNECTOR
13	5E/1355	CABLE – SEXTOMET/4 AMP
14	5E/1364	CABLE – DUCEL 19 AMP

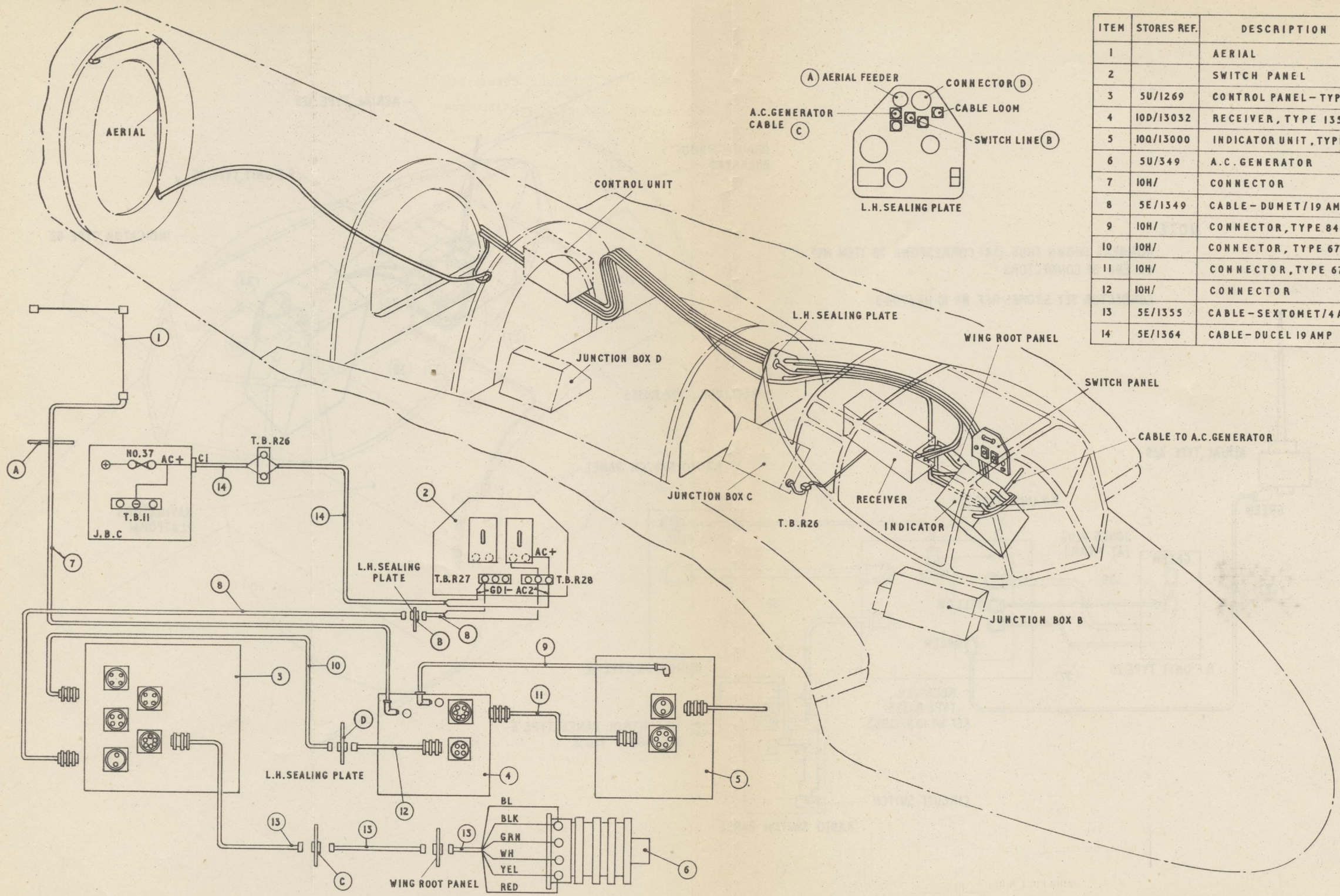

Fig. 4. ARI 5083 – QH (unconverted aircraft)

CONNECTORS				
ITEM	STORES REF.	CABLE TYPE	FROM	TO
15	10HA/7154	CONNECTOR	AERIAL PANEL	AERIAL BREAK
16	10HA/7156	CONNECTOR	AERIAL PANEL	T.R.3624
17	10HA/7155	CONNECTOR	AERIAL PANEL	AERIAL BREAK
18	10HA/7157	CONNECTOR	AERIAL PANEL	T.R.3624
19	10HA/7159	CONNECTOR	AERIAL PANEL	TRANS. AERIAL
19A	10HA/7158	CONNECTOR	AERIAL PANEL	T.R.3624
21	10HA/7149	CONNECTOR	T.R.3624	INDICATOR 208
22	10HA/7150	CONNECTOR	T.R.3624	CON.UNIT 256
23	10HA/7151	CONNECTOR	T.R.3624	CON.UNIT 256
24	10HA/7153	CONNECTOR	T.R.3624	TERM.BLOCK 125
25	10HA/7152	CONNECTOR	T.R.[BLOWER]	TERM.BLOCK 125
	10HA/7042	CONNECTOR SET	—	—

NOTE,
REFERENCE Nos OF CONNECTORS SHOWN THUS (17)
CORRESPOND TO ITEM Nos ON END OF CONNECTORS

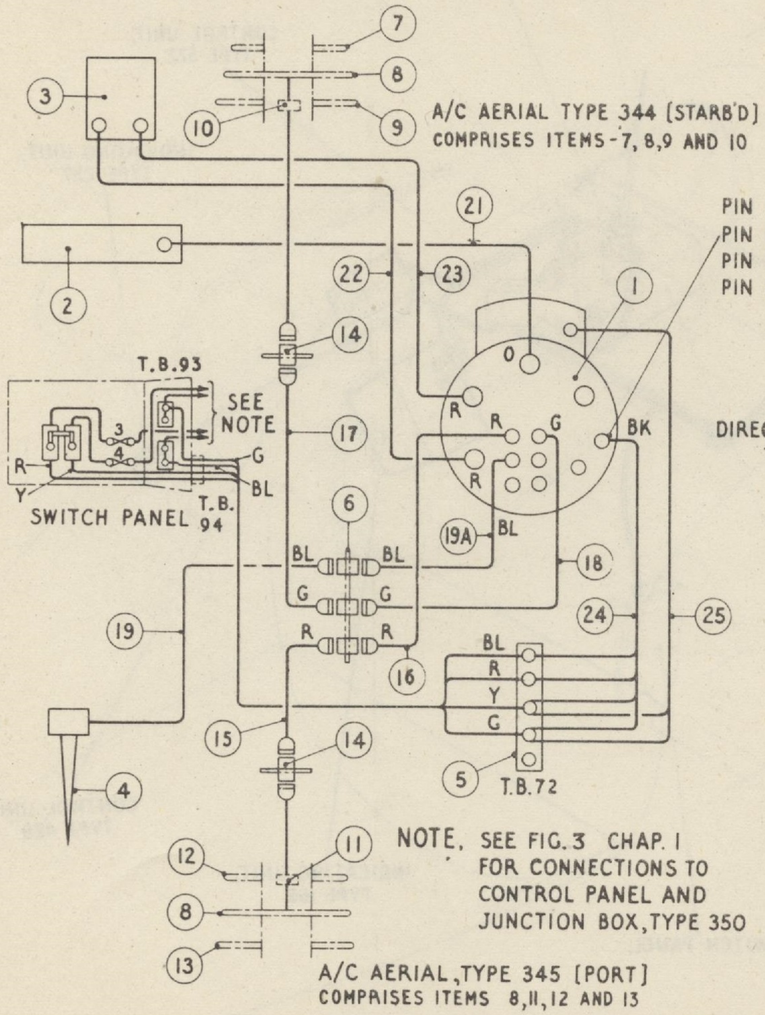

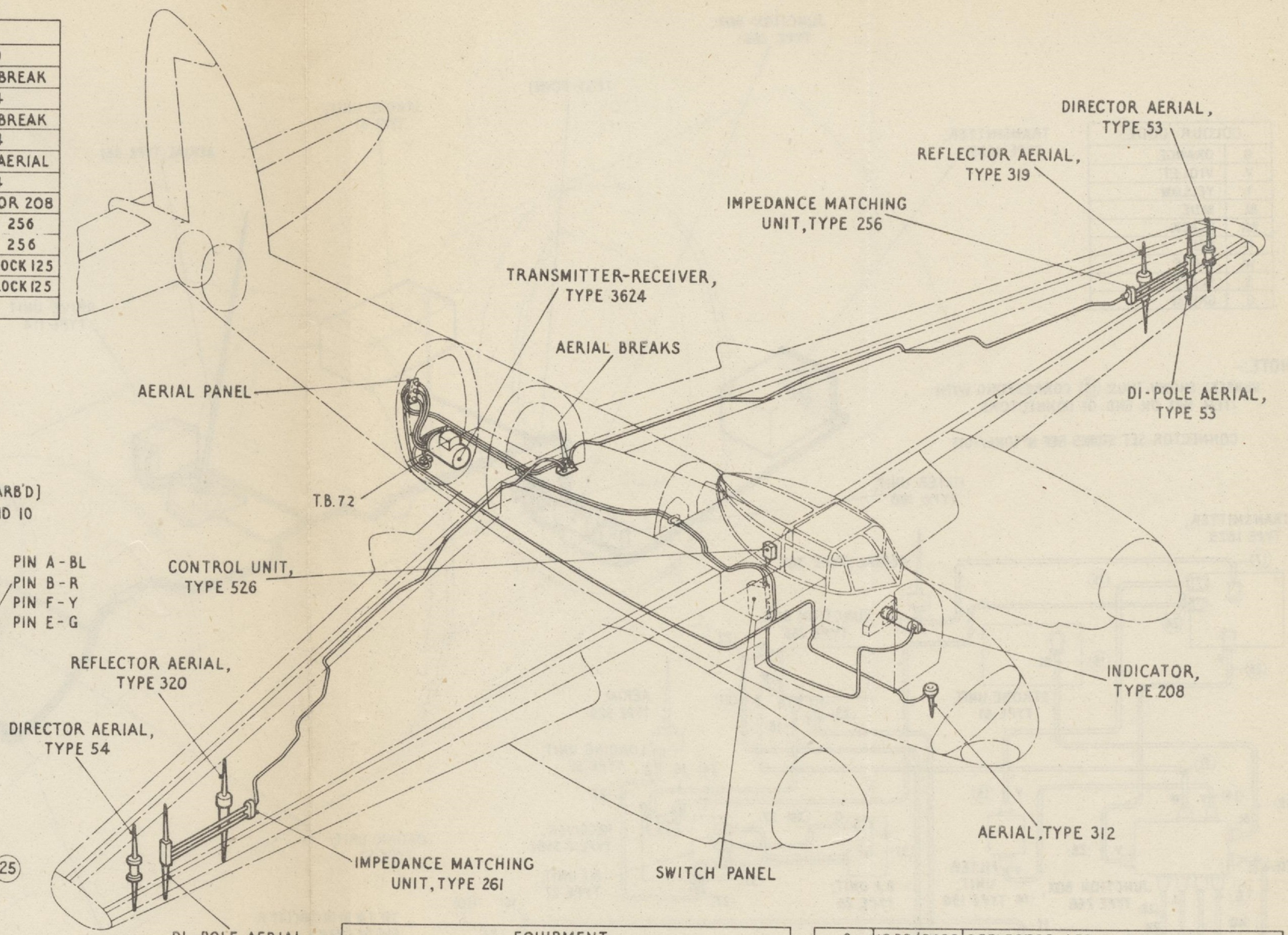

COLOUR CODE	
O	ORANGE
R	RED
G	GREEN
BL	BLUE
BK	BLACK
Y	YELLOW

EQUIPMENT		
ITEM	STORES REF.	DESCRIPTION
1	10DB/8119	TRANS.-REC. TYPE 3624
2	10QB/6130	INDICATOR, TYPE 208
3	10LB/6259	CONTROL UNIT, TYPE 526
4	10BB/6096	AERIAL, TYPE 312
5	5C/868	TERMINAL BLOCK 125
6		AERIAL PANEL [PLUG ASSY]
7	10BB/6436	DIRECTOR AERIAL, TYPE 54
8	10BB/6434	DI-POLE AERIAL, TYPE 53, (2)
9	10BB/6438	REFLECTOR AERIAL, TYPE 320
10	10AB/8550	IMPEDANCE MATCHING UNIT, TYPE 261
11	10AB/6689	IMPEDANCE MATCHING UNIT, TYPE 256
12	10BB/6437	REFLECTOR AERIAL, TYPE 319
13	10BB/6435	DIRECTOR AERIAL, TYPE 53
14	10H/628	PLUG, TYPE 246

MOD. 1121

Fig.5. ARI 5610-QR

8404 68973 3/54 450 C.B&S.LTD. GP.55.

COLOUR CODE	
O	ORANGE
V	VIOLET
Y	YELLOW
BL	BLUE
BK	BLACK
R	RED
W	WHITE
S	SLATE
G	GREEN

NOTE:-

NUMBERS SHOWN THUS (15) CORRESPOND WITH ITEM Nos ON END OF CONNECTORS

CONNECTOR SET STORES REF. No 10HA/7013

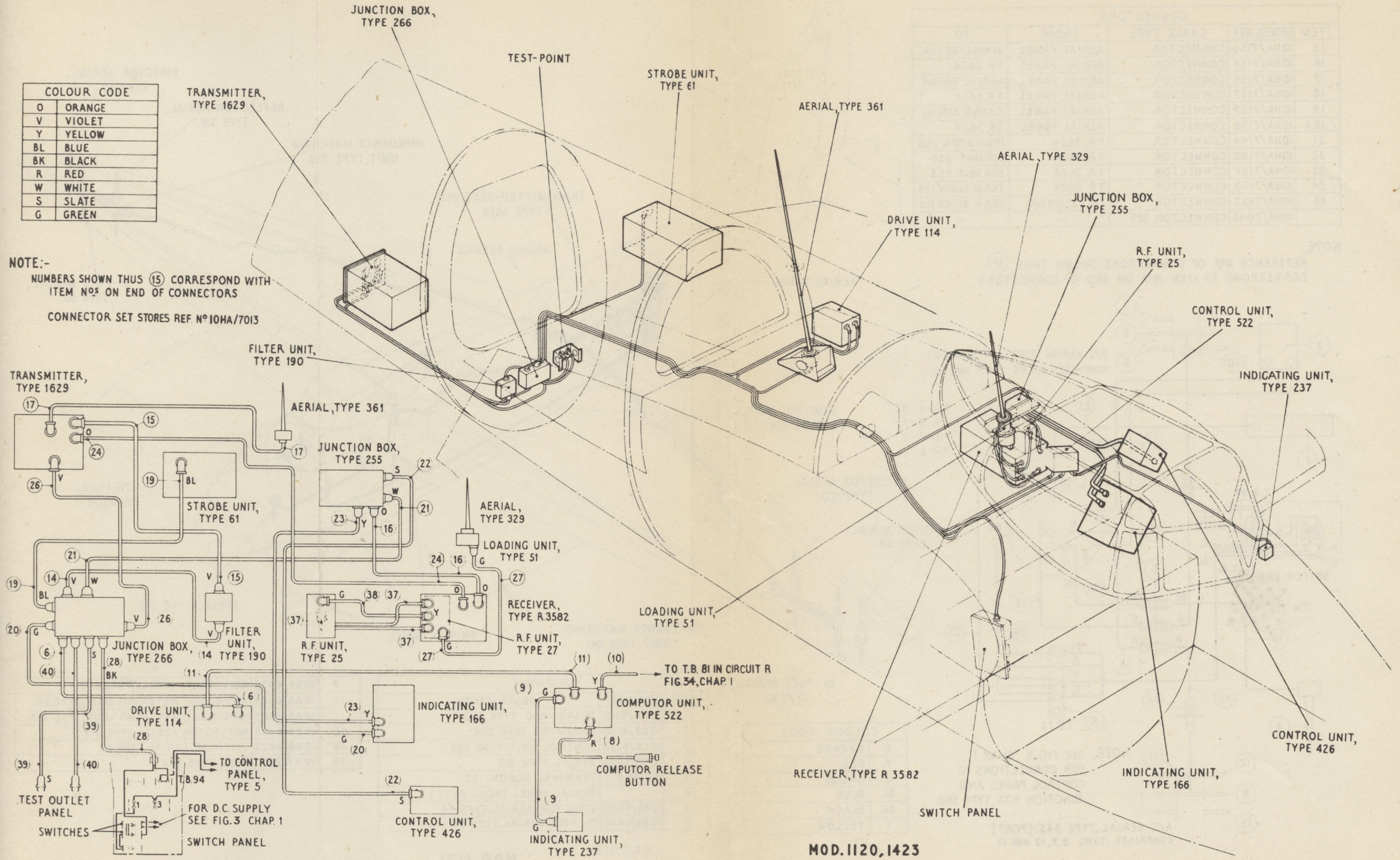

Fig.6. ARI 5685-QGH

This leaf issued in reprint
December, 1947

SECTION

7

DESCRIPTION OF STRUCTURE

Chapter 1—Fuselage
Chapter 2—Main plane
Chapter 3—Tail unit
Chapter 4—Flying controls
Chapter 5—Alighting gear

123 M/C M45854 2/48 200 C.B.& S.Ltd. Gp.30

CHAPTER 1

FUSELAGE

Chapter 1

FUSELAGE

LIST OF CONTENTS

	Para.		Para
General construction	1	Cockpit canopy	3
Doors	2	Protective covering	4

LIST OF ILLUSTRATIONS

	Fig.		Fig.
Fuselage construction	1	Cockpit canopy	2

General construction (*fig. 1*)

1. The fuselage is of all wood construction, built in halves and joined along the top and bottom centre lines where it is reinforced with spruce and plywood members. The fuselage consists of balsa planks sandwiched between plywood skins; the plywood of the front portion is spruce, the remainder being birch. Where bulkheads and structural members are attached to the skin, at cut-aways and the half fuselage joints, the balsa insert is replaced by laminated spruce strips, the whole forming an oval tapered monocoque structure with spaced bulkheads and formers. Spruce members are fixed to the skin forming the anchorage points for the wing front spar; stiffeners are provided externally, between bulkheads No. 4 and 5. The compartment in the fuselage nose, containing the bomb sight and computors, is accessible to the navigator. Bulkheads 3 and 4 have openings giving access to the equipment fitted on the wing upper surface and on the rear floor. To accommodate the wing, a suitable opening is arranged in the forward portion of the fuselage side, the opening below the wing being closed by detachable side panels which are bolted to the fuselage and the wing ribs. Ferrules countersunk, glued and bradded to the skin, make the attachments for light components. The tail unit is bolted to the two rear bulkheads and the tail wheel unit is anchored to the rear bulkhead. Three attachment brackets on bulkhead No. 3, and, two above the wing cut-away, form the main fuselage to wing joints.

Doors

2. The entry and exit hatch is through the bottom of the fuselage below the cockpit floor on the starboard side. Two doors have to be opened, the inner door hinging upwards against the fuselage side and the outer door downwards. A jettisoning lever on the inside of the outer door, when pressed, releases the door from its hinges. A hinged door on the starboard side of the fuselage behind the flap trailing edge, gives access to the equipment in the rear fuselage. Bomb doors, hydraulically operated, extend from bulkhead No. 2 to bulkhead No. 4.

Cockpit canopy

3. The cockpit canopy, a welded steel structure bolted and screwed to the fuselage structure, is covered with transparent plastic, except for the windscreen, which is toughened glass. "Dry air" sandwich panels are used for the windscreen, the canopy top front and the side balloon panels. Hinged direct vision panels are fitted and an emergency exit is incorporated in the roof. Fixed parts for the two-stage amber equipment are fitted to the canopy structure.

Protective covering

4. The outer ply skin is covered with madapollam, and has wide linen strips over the centre joints and narrow reinforcing strips along the edges and openings in the skin.

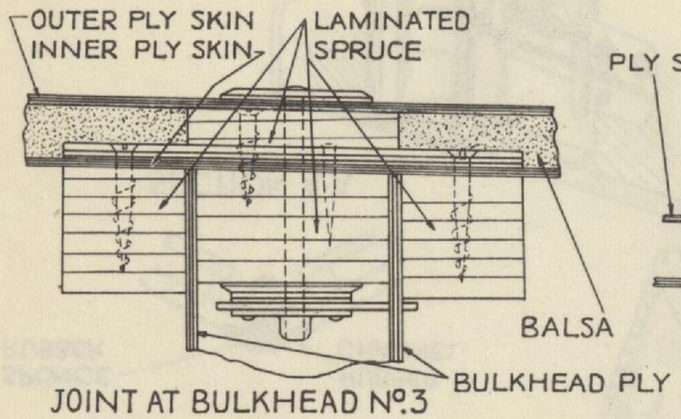

JOINT AT BULKHEAD Nº3

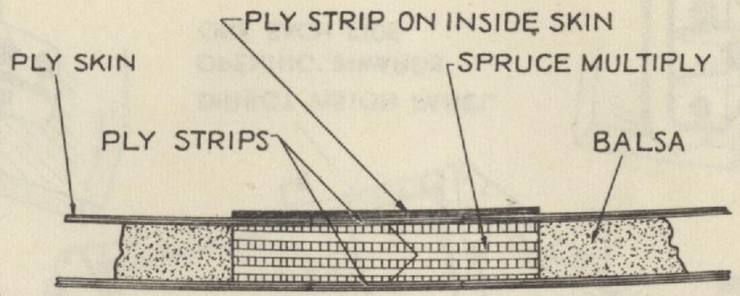

DETAIL OF JOINTS AT A

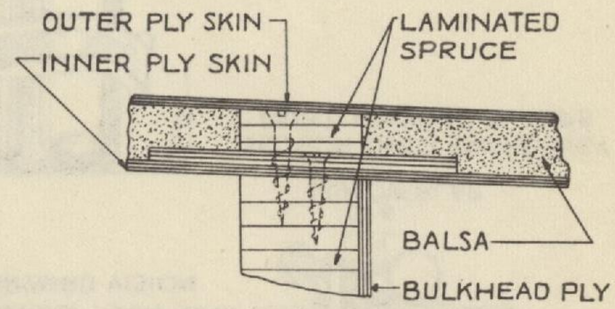

TYPICAL BULKHEAD JOINT

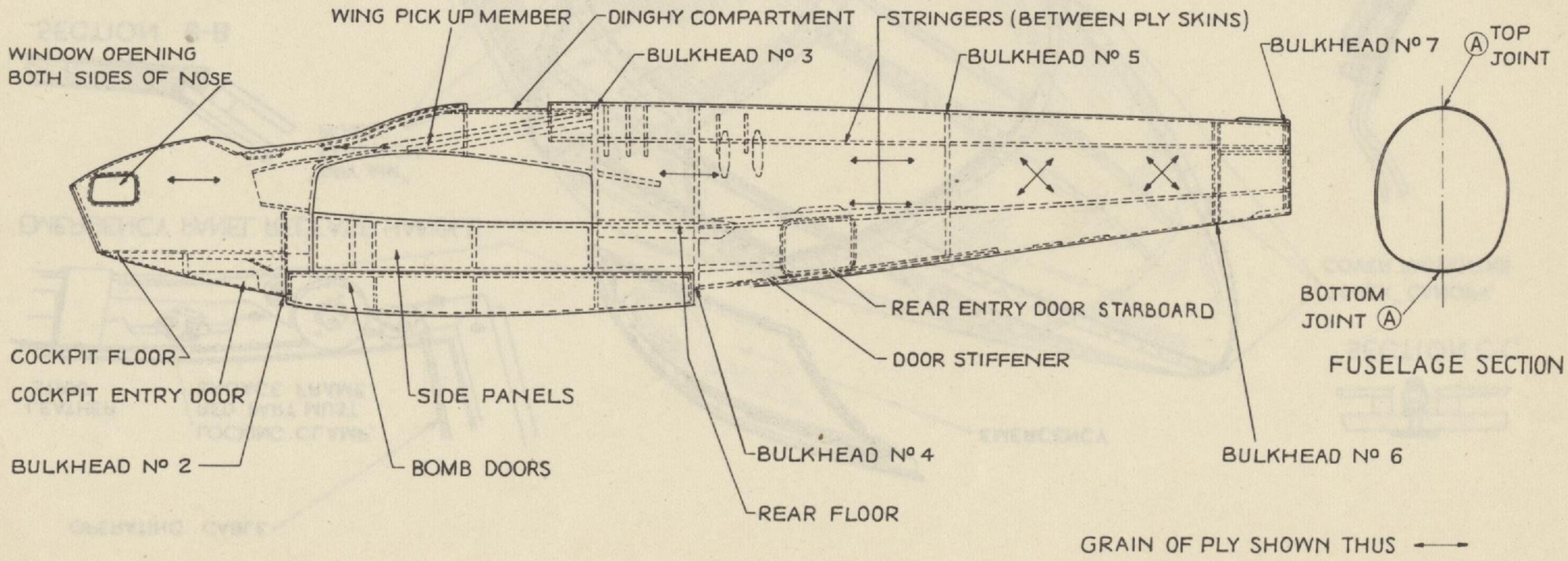

FUSELAGE SECTION

FIG. 1 FUSELAGE CONSTRUCTION

G2042 M27349 9/49 550 C.B.& S.Ltd. G855.

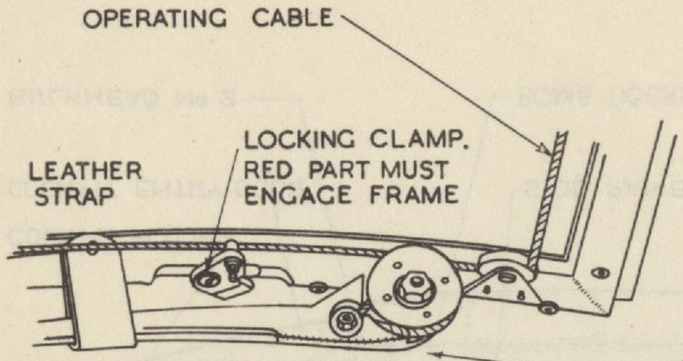

EMERGENCY PANEL RELEASE HANDLE

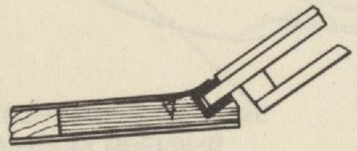

SECTION B-B

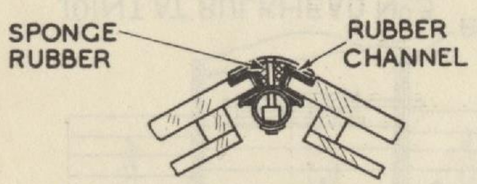

SECTION A-A

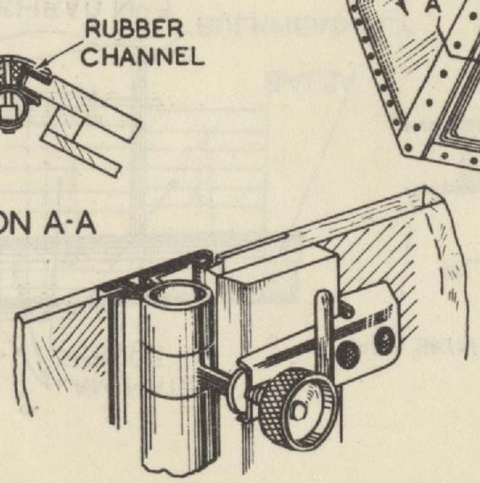

DETAIL OF SIDE PANEL FASTENING

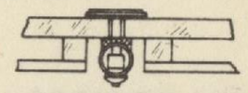

SECTION C-C.



SECTION D-D

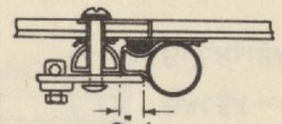

SECTION THRO' EMERGENCY PANEL LOCKING CLAMPS

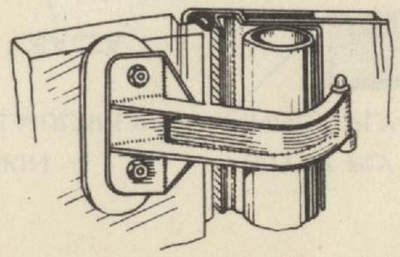

DETAIL OF SIDE PANEL HINGE

FIG. 2 COCKPIT CANOPY

CHAPTER 2

MAIN PLANE

Chapter 2

MAIN PLANE

LIST OF CONTENTS

	Para.		Para.
General construction	1	*Leading edges*	6
Attachment points	3	*Ailerons*	8
Spars	4	*Flaps*	9
Ribs	5	*Protective covering*	10

LIST OF ILLUSTRATIONS

	Fig.		Fig.
Main plane	1	*Main plane details*	3
Details of ribs	2	*Aileron*	4

General construction (*fig. 1*)

1. The main plane is a one-piece, wood, cantilever structure, tapering in plan form and thickness. It comprises two box spars extending over the full span, with spruce and plywood ribs, a plywood stressed skin and detachable wing tips. The top skin between the spars is made in the form of a cellular structure, with two sheets of plywood separated and stiffened by spruce stringers running spanwise; the plywood is glued and screwed to the stringers, ribs and spars. The bottom skin is of single plywood sheets, glued and screwed to the ribs and spars, and outboard of rib No. 6 to the lateral stringers. Aft of the rear spar the top and bottom skins, supported by short ribs, project as shrouds for the flaps and ailerons. A section of the wing between ribs No. 1 and 4, extending from the front spar back to about one third of the chord, is raised to fair off the wing radiators and the engine top cowling. Shaped lateral formers, are fixed to the wing top skin and the ply fairing is attached to the formers.

2. Eight fuel tanks, housed completely in pairs inside the wing, are accessible from the underside through detachable panels. These panels have double skins reinforced at the centre with spruce stringers and at the edges with spruce and ply-faced bakelite strips. In between the stringers and edges, the ply skins are filled with balsa. The panels, when screwed to the spars and ribs are part of the bottom stressed skin. Two more fuel tanks, fitted between ribs No. 1 and the centre rib, are accessible through the bomb doors. The detachable wing tips are constructed with a plywood skin, glued and screwed to spruce formers and laminated spruce edges. Attachment is by screwing the wing tip flanges to bakelite strips on the outer rib of the wing structure. The navigation lamps, housed in the wing tips, have moulded transparent plastic covers; landing lamps retract into a recess in the main plane bottom skin outboard of ribs No. 6.

Attachment points

3. There are four wing-to-fuselage attachment points, two at the bottom of the rear spar and two on the top wing surface near the front spar. The two, rear spar fittings are bolted through the rear spar and to the bottom boom of ribs No. 1. Both front attachment fittings are bolted through the top skins just at the rear of the front spar. There is a wood packing block between each fitting and the skin, and the attachment bolts pass through the inter-skin stringers which are reinforced locally by packing blocks. A datum bolt locating bracket is bolted to the rear spar lower boom mid-way between the wing rear attachment fittings. Brackets for the radiator assemblies and the engine mounting are fitted on the front spar, and those for the undercarriage structures on both the front and rear spars, also on the rear ends of ribs 2 and 3. Aileron and flap hinge loads are carried by brackets and box ribs on the rear spar.

Spars

4. The spars consist of laminated spruce booms and birch plywood webs, the thickness of the booms and webs varying over the spar length. As the spars are continuous throughout their length, staggered scarf joints are made at intervals in the booms and webs. Packing blocks are fitted between the booms at ribs 1, 3 and 4 ; elsewhere, rib posts are glued and screwed to the webs with supporting blocks inside. Over the inner portion of the spars on each side of the bottom booms ash reinforcing strips are glued and screwed, and to the inner strips are fixed the angle plates for the detachable tank panels. External packing blocks are fitted to the spars where the attachment brackets for the engine bearers, undercarriage structure, fuselage attachment joints and aileron hinges are assembled.

Ribs (*fig. 2*)

5. The centre rib which supports most of the weight of the 4,000 lb. bomb has two bracing arches which are anchored to the fuselage side panels. This rib consists of two separate ply webs with one top and two bottom booms, the webs being reinforced by packing blocks to take the bomb release gear and the two hoisting winches. Ribs 2 to 5 and 8 have double ply webs separated by the top and bottom booms, the remaining ribs having single webs. The top booms of the centre rib and ribs 16 are glued and screwed to the inner skin and bolted to the outer skin through alternate lateral stringers ; D-shaped holes in the webs give access to the nuts. Ribs 7 to 11 are glued and screwed to the inner skin only, the remaining ribs being secured by angles glued and bradded to the top booms and the lateral stringers. The bottom booms of ribs 7 to 15 excepting ribs 8 are glued and screwed to the stringers. The centre rib and ribs 3 and 4 are secured to the spars by angle brackets, the remaining ribs, including the shroud ribs are glued and screwed to rib posts. Secured to the lower booms of ribs 1, 3, 4 and 6, are bakelite strips to which are attached the sides of the tank panels.

Leading edges (*fig. 3*)

6. The leading edge outboard of each engine is constructed in a jig as a separate assembly. It consists of ply faced spruce ribs reinforced by ply gussets, spaced and stiffened by a continuous scalloped ply strip which is in turn reinforced by a spruce strip. The whole assembly is covered by a pre-formed plywood skin glued and screwed to the ribs. The leading edge is secured to the front spar top and bottom face, and to a strip fitted on the forward face of the spar lower boom, by glue and screws. A weathering strip covers the top joint.

7. The leading edge between the engine nacelles and the fuselage is of Alclad and forms the entry duct and housing for the oil and coolant radiators : the whole assembly is bolted to brackets on the front spar and to the fuselage.

Ailerons (*fig. 4*)

8. The ailerons are of all metal construction having a flanged Alclad spar to which are riveted flanged ribs and nose formers, with an Alclad sheet cover. Mass balance weights are secured to the front ends of the nose formers and metal balance tabs are fitted to the inboard ends with piano-type hinges. Each aileron is attached to the main plane by bolts passing through forked lugs at three hinge brackets. Adjustment for hinge alignment is by washers behind the hinge brackets and shims on each side of the forked lugs. The balance tabs are connected to balance levers, fitted to the inner hinge rib, by connecting rods. The port balance lever is adjustable from the cockpit for aileron trim ; the starboard one can be manually adjusted when the aircraft is on the ground.

Flaps

9. The construction of the flaps consists of a spar with spruce booms and a single plywood web to which the ribs are attached at rib posts. The pre-formed plywood nose skin, with the nose ribs, is attached to the spar as a separate unit, then the tail ribs and trailing edges, which are covered with a ply skin. Scarfed joints in the skin are made along the spar booms. The flaps are coupled together by a torque tube which is bolted to the two inboard ribs through flanges. The centre hinge bracket on the main plane rear spar is supported by adjustable tubes and locates the flap laterally. Box ribs projecting from the rear spar carry the flap inner and outer hinge brackets ; adjustment is provided on these brackets in the form of serrations and shims to permit the flaps being adjusted relative to the main plane.

Protective covering

10. The upper surfaces of the main plane and flaps are covered with linen and the under surfaces with madapollam.

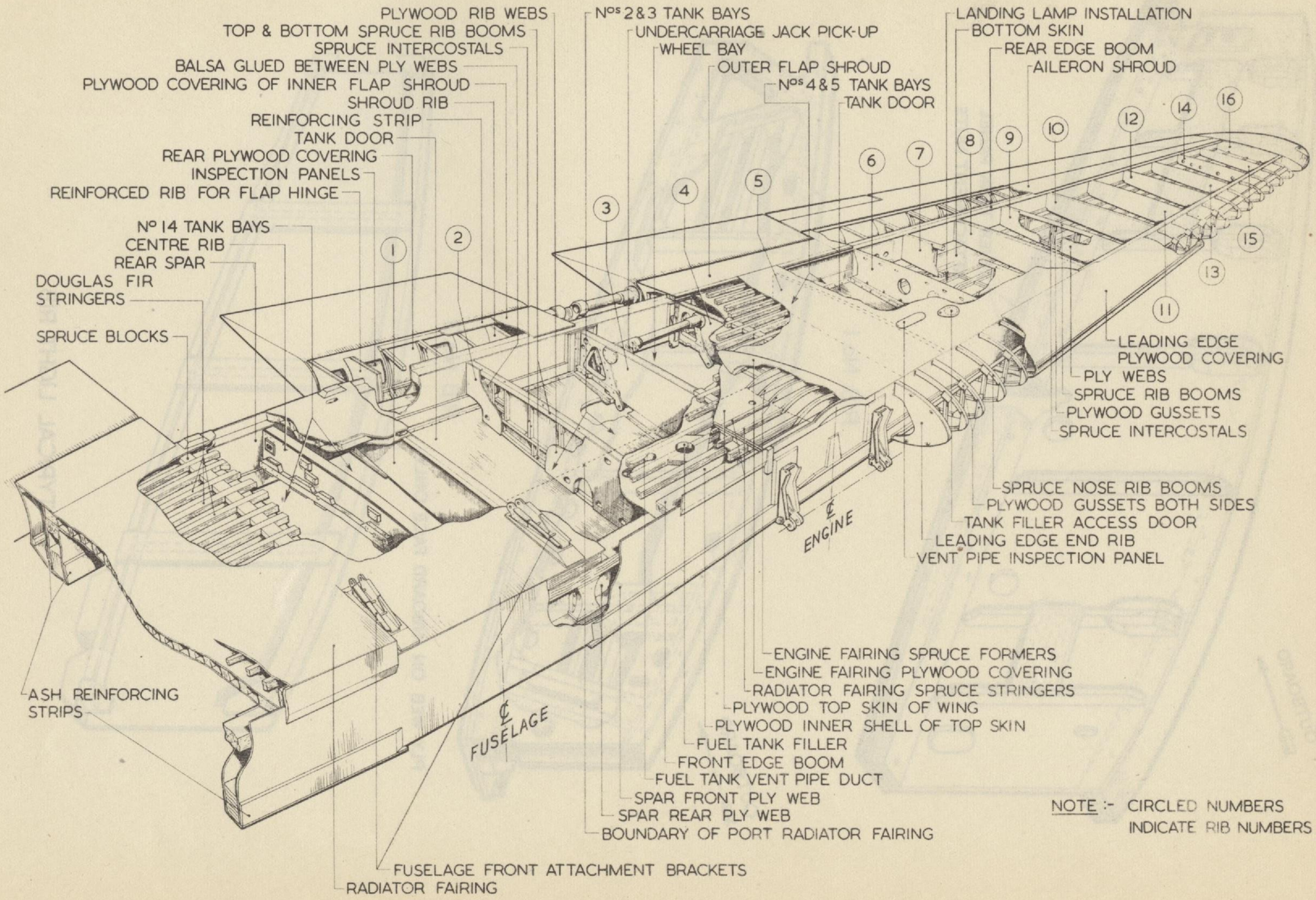

NOTE :- CIRCLED NUMBERS INDICATE RIB NUMBERS

FIG. 1 MAIN PLANE

G2042 M27349 9/49 550 C.B.& S.LTD. GP55.

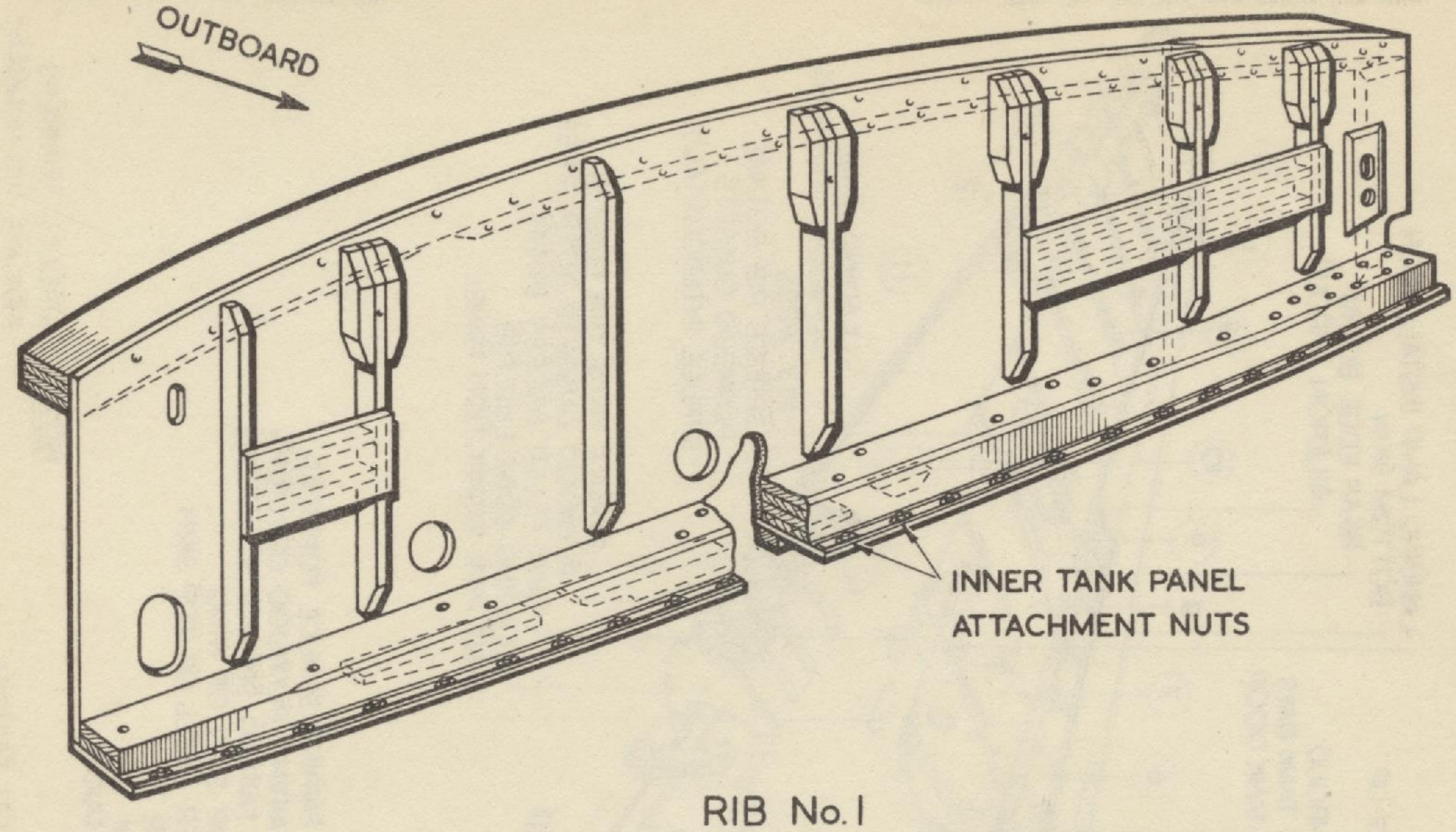

RIB No.1

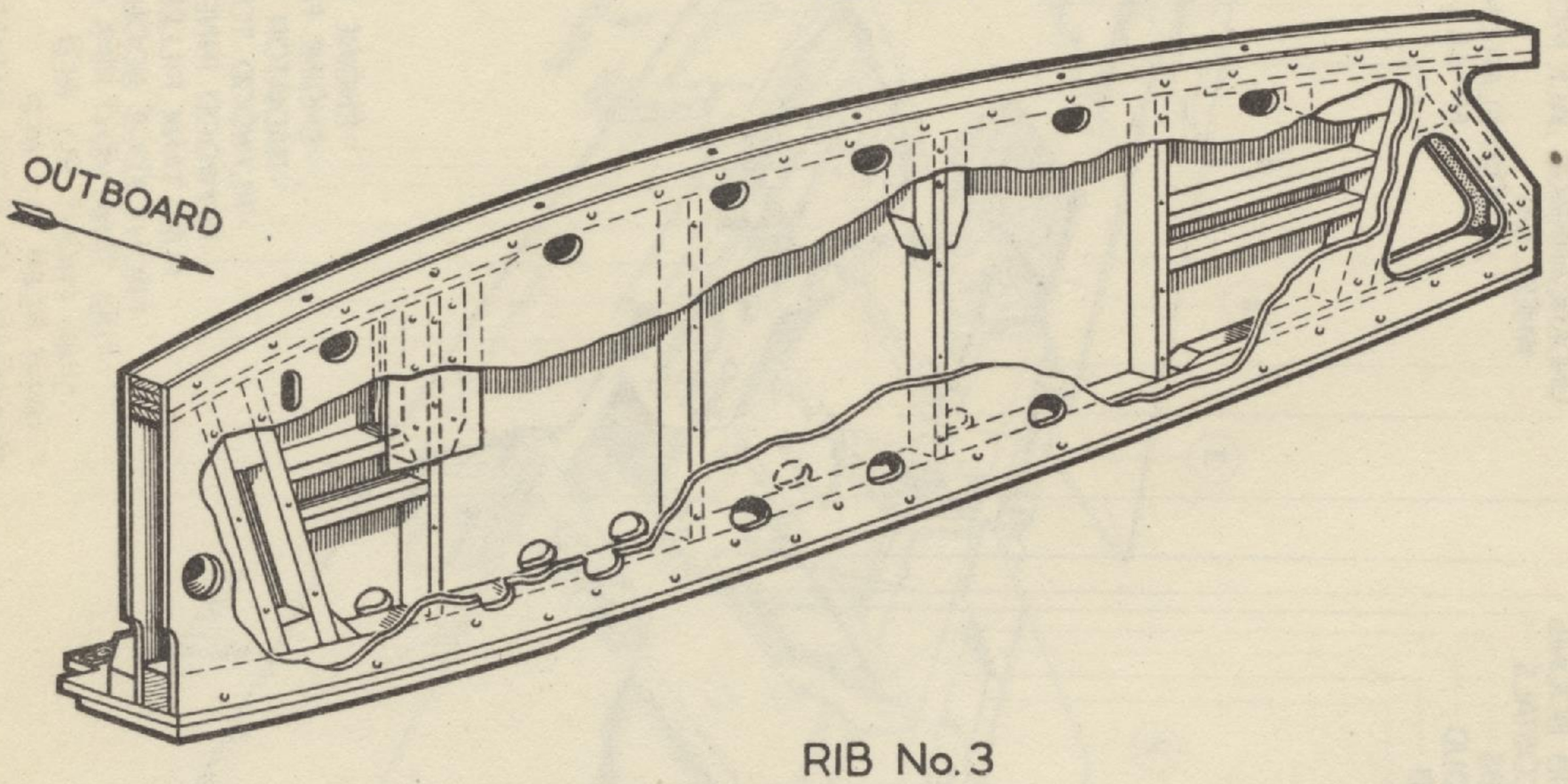

RIB No.3

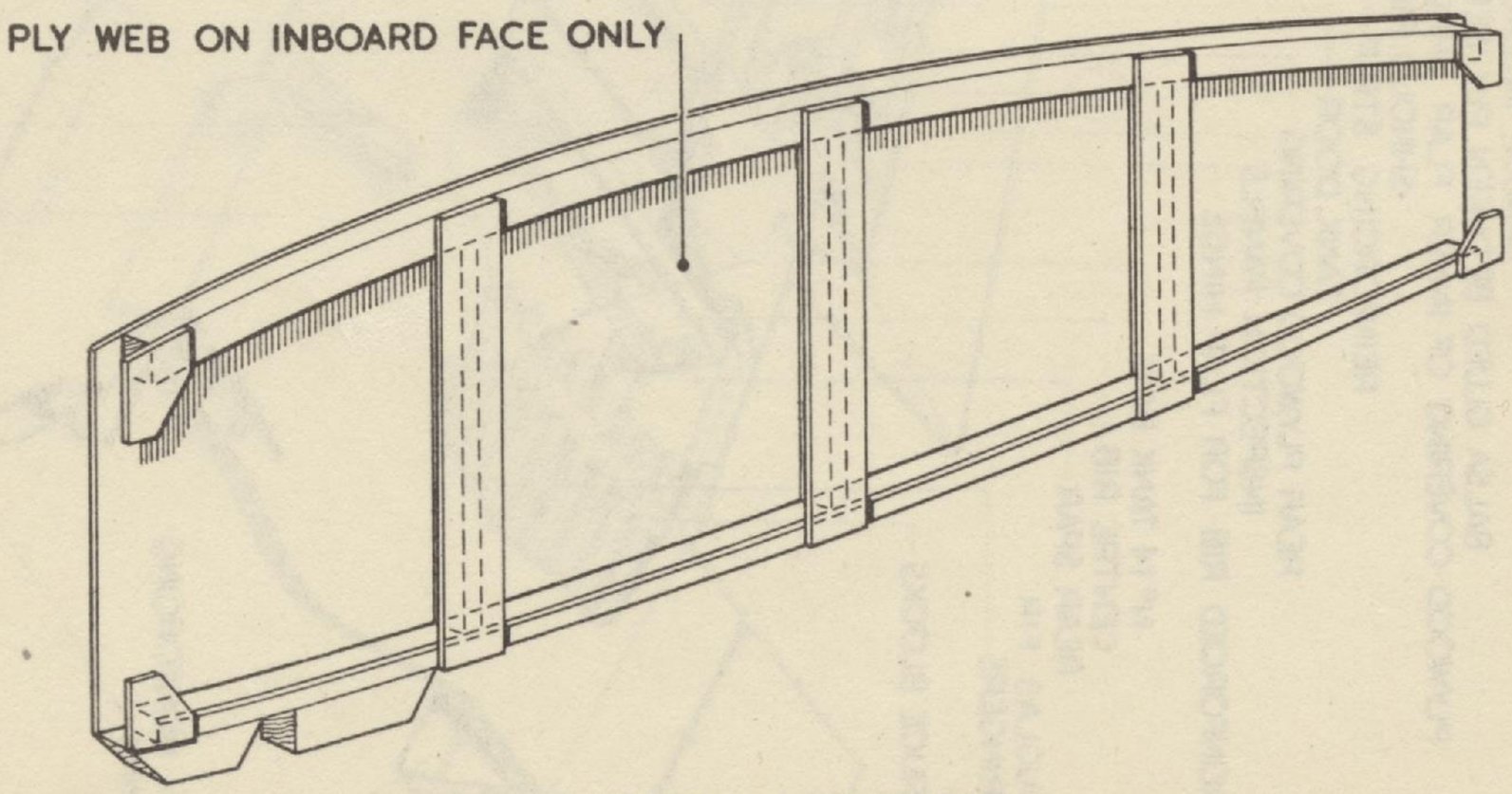

TYPICAL LIGHT RIB

FIG. 2 DETAILS OF RIBS

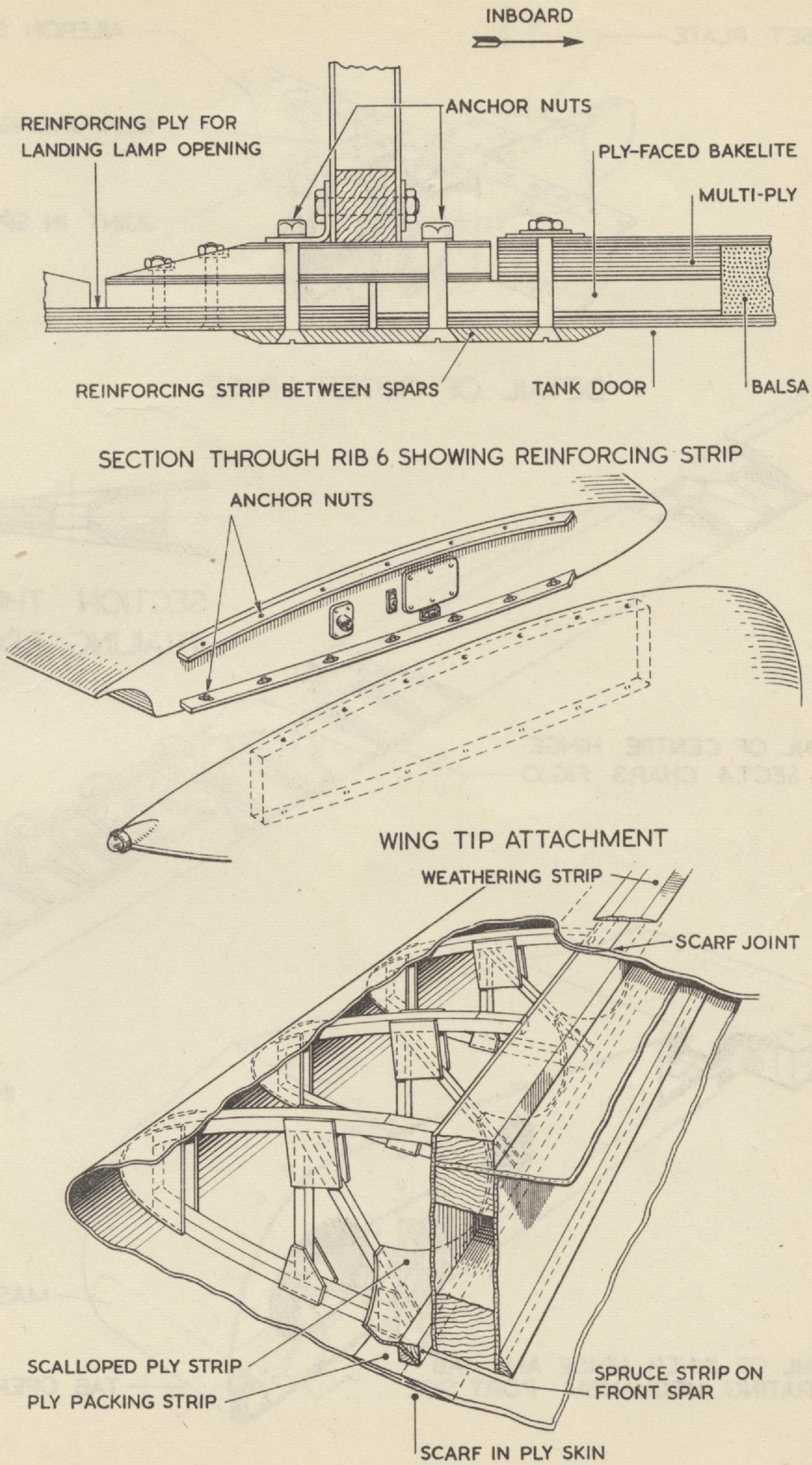

FIG. 3 MAIN PLANE DETAILS

G2042 M27349 9/49 550 C.B.& S.LTD. GP.55.

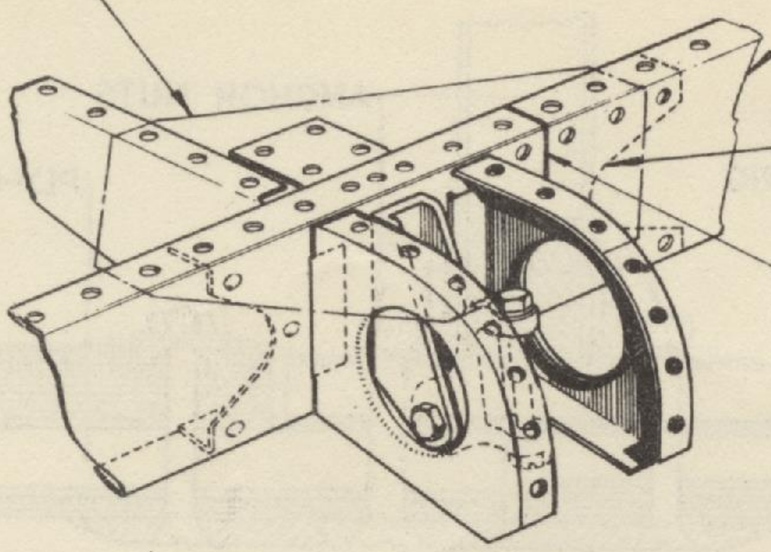

DETAIL OF OUTER HINGE

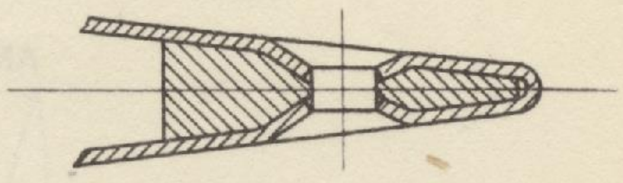

SECTION THROUGH
TRAILING EDGE

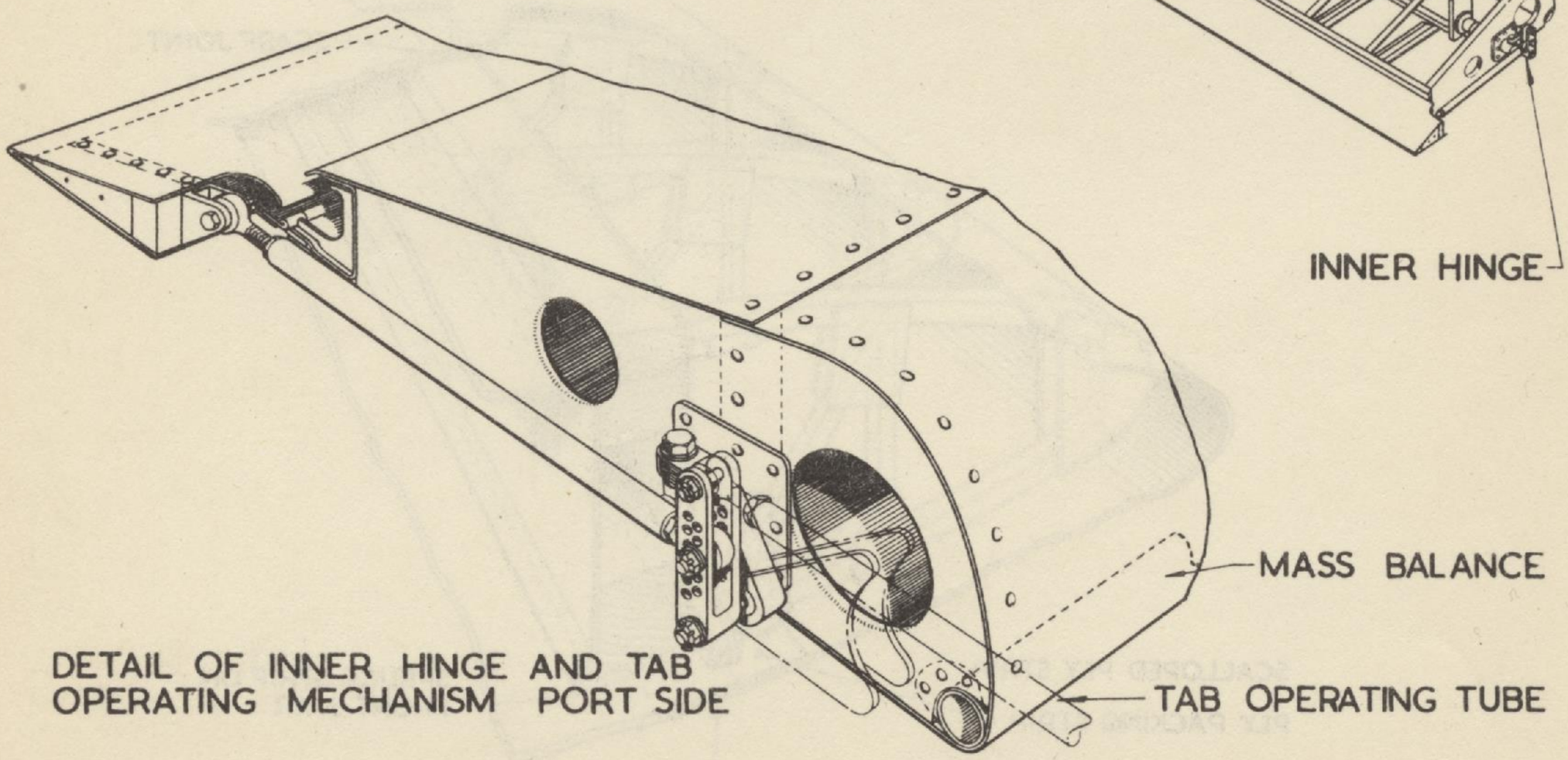

DETAIL OF INNER HINGE AND TAB
OPERATING MECHANISM PORT SIDE

FIG. 4 AILERON

CHAPTER 3

TAIL UNIT

Chapter 3

TAIL UNIT

LIST OF CONTENTS

	Para.		Para.
General construction	1	*Rudder*	5
Tail plane	2	*Hinges*	6
Elevators	3	*Cone fairing*	7
Fin	4		

LIST OF ILLUSTRATIONS

	Fig.		Fig.
Tail unit structure	1	*Fin and rudder*	2

General construction (*fig. 1*)

1. The tail unit is of conventional design without external bracing, and comprises the tail plane, elevators, fin and rudder. The fin and tail plane are constructed of wood, and the elevators, rudder and trimming tabs of metal. The joints between the fuselage and the fin and tail plane have metal fairings. A cable guard is fitted to prevent fouling of the tail unit by targets on tow (Mod. 1619 and Mod. 1627 only). This guard is not illustrated in fig. 1 and 2.

Tail plane

2. The tail plane is a one-piece cantilever structure of symmetrical section, comprising two continuous box spars, spruce and plywood ribs, a laminated leading edge and a plywood skin covered with madapollam. The ribs are glued and screwed to the leading edge and to rib posts on the spars ; the ply covering is glued and screwed to the spars, and rib booms extending slightly beyond the rear spar form the elevator shrouds. The centre portion of the tail plane is free of ribs and covering, the recess so formed, partially houses the tail wheel when retracted. The front spar is attached to the fuselage rear bulkhead at three points, and the rear spar is supported at two points by adjustable struts, the other ends of which are bolted to brackets on the top and bottom of the fuselage rear bulkhead (*Chap.* 5, *fig.* 2). The tail plane angle of incidence is adjusted by the supporting struts. Both the front spar outer attachment bolts hold split bushes with tapered bores (*fig.* 1), the two halves being inserted into the fittings from opposite sides. The assembly is completed with tapered bushes and bolts.

Elevators

3. The elevators, of riveted alclad construction, consist of pressed ribs, flanged spars and tubular trailing edges, covered with a light gauge metal skin. Internal mass balance weights are incorporated in the aero-dynamic horn balance of each elevator and a static balance weight is attached by an arm to the starboard elevator torque tube. Both elevator spar torque tubes are secured to the two inboard ribs, and coupled together at the elevator centre hinge fitting; the elevator control operating lever is fitted to the port torque tube. An adjustable trimming tab with a piano-type hinge is bolted to the inboard end of each elevator. Each tab is connected by a rod to a torque shaft which turns in ball bearings inside the spar torque tube. A lever connects the torque shaft with the jack operated trunnion. The port and starboard elevators are interchangeable, the only alteration necessary being the interchanging of the static balance arm and the control lever.

Fin (*fig. 2*)

4. The single fin is a symmetrical sectioned, fixed cantilever, wooden structure having two box spars, a laminated leading edge, spruce and plywood ribs, and a plywood covering. The general construction is similar to that of the tail plane. The front and rear spars are attached to No. 6 and 7 fuselage bulkheads respectively by two bolts

per spar. The bolt assemblies are similar to those described for the attachment of the tail plane. The air speed indicator pressure head is mounted on the leading edge near the top of the fin, and the pipe line is attached to the rear face of the rear spar.

Rudder (*fig. 2*)

5. The construction of the rudder is similar in most respects to that of the elevators but has a fabric covering. The spar torque tube, which carries the bottom hinge and rudder operating lever lugs, is bolted to the two lower ribs. Mass balance weights are fitted in the horn and secured by a bolt through the horn bottom rib. An adjustable servo trimming tab is fitted, the connecting-rod of which is operated by a torque shaft which turns on ball bearings inside the spar torque tube. The torque shaft lower lever is connected to the trim jack links.

Hinges (*fig. 1 and 2*)

6. The bottom rudder and the centre elevator hinges are the datum hinges and, take both radial and axial loads. The remaining rudder and elevator hinges take radial loads only.

Cone fairing

7. A detachable metal cone fairs in the joint between the tail plane and the fuselage, and also the recess for the retractable tail wheel. When removed, the tail plane attachment points, rudder and elevator trim tab jacks and controls are exposed.

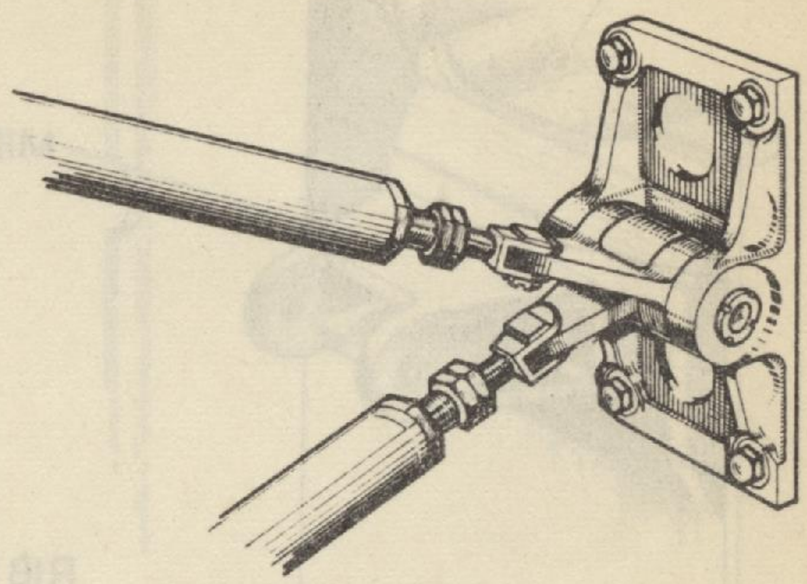

ASSEMBLY OF TAIL PLANE SUPPORT TO REAR SPAR

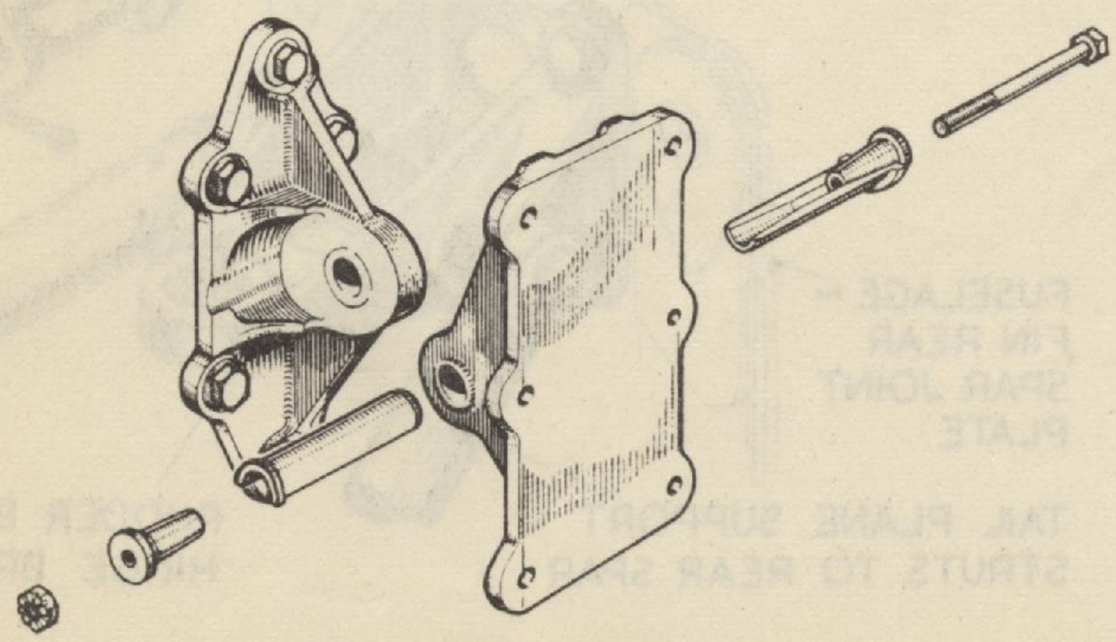

ASSEMBLY OF TAIL PLANE TO FUSELAGE JOINTS

FIG. 1 TAIL UNIT STRUCTURE

G2042 M27349 9/49 550 C.B.& S.LTD. GR55.

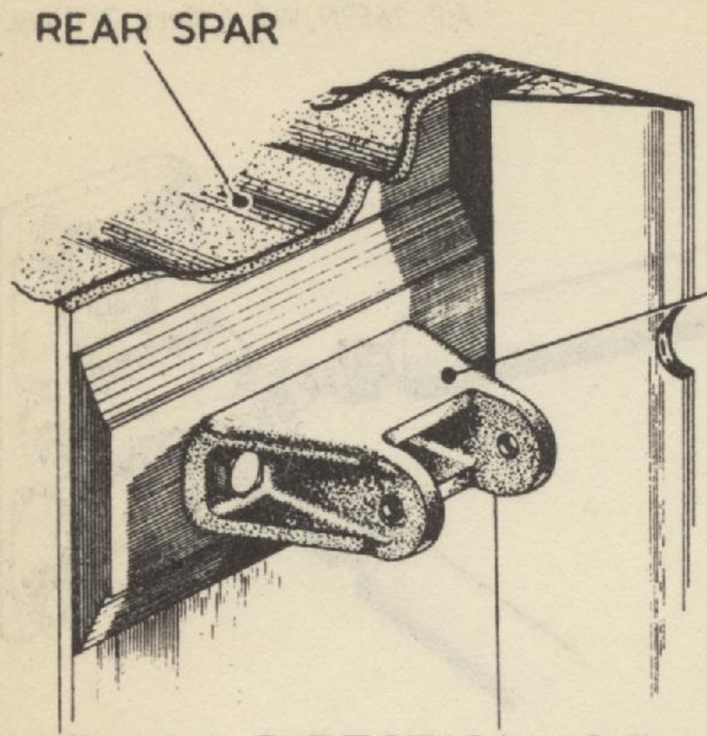

VIEW IN DIRECTION OF ARROW A

ASSEMBLY OF MIDDLE HINGE ON REAR SPAR OF FIN (TOP HINGE SIMILAR)

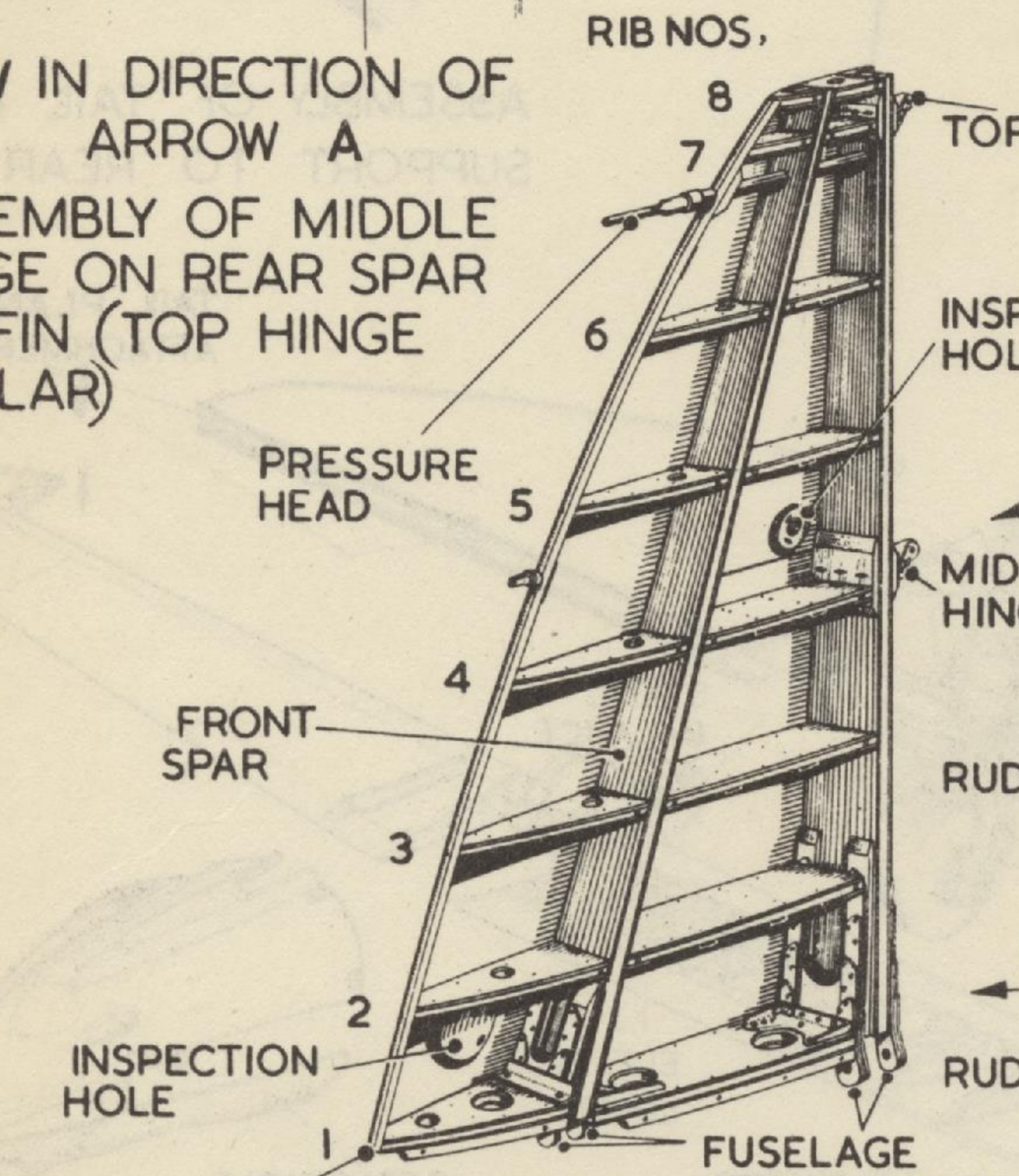

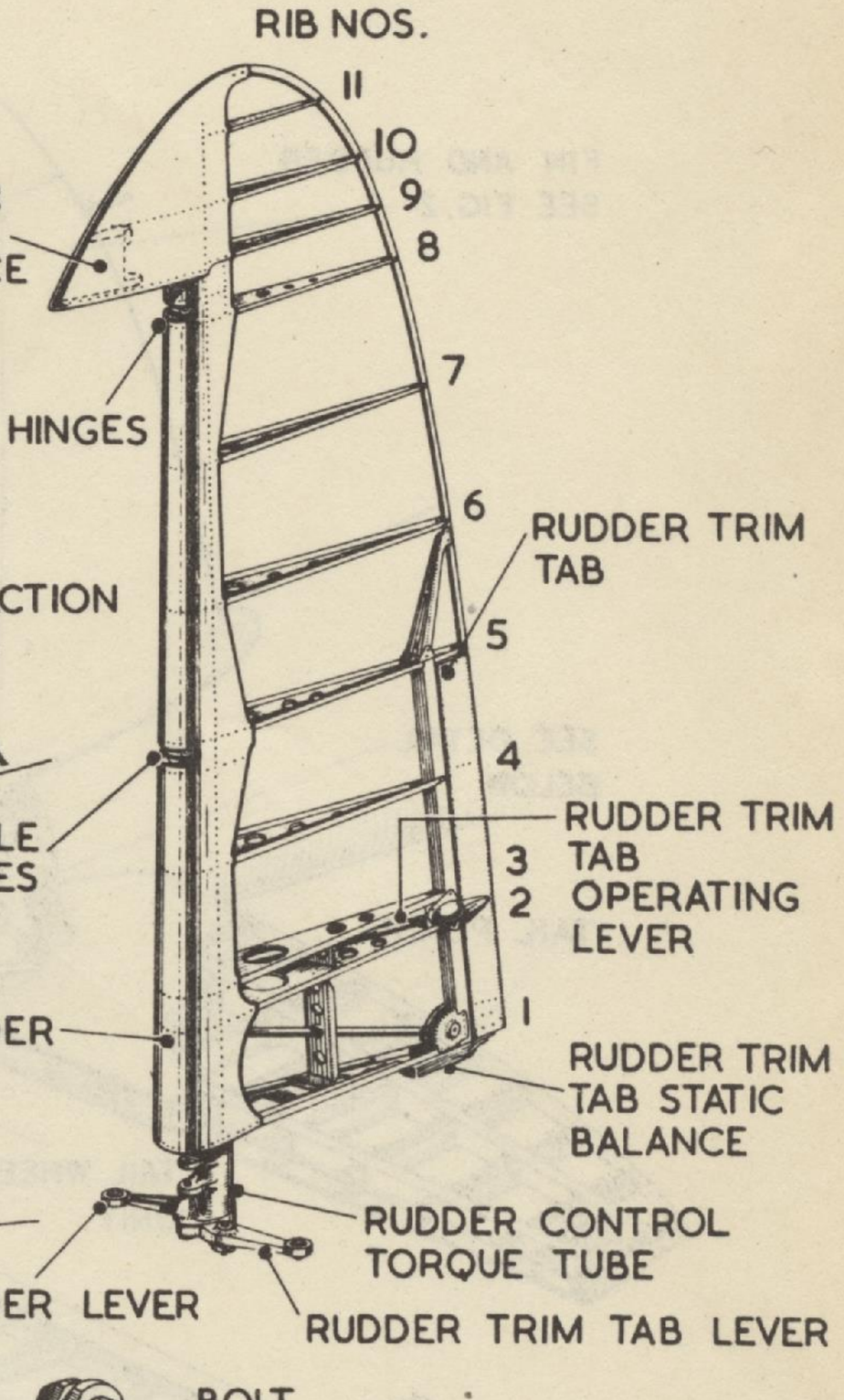

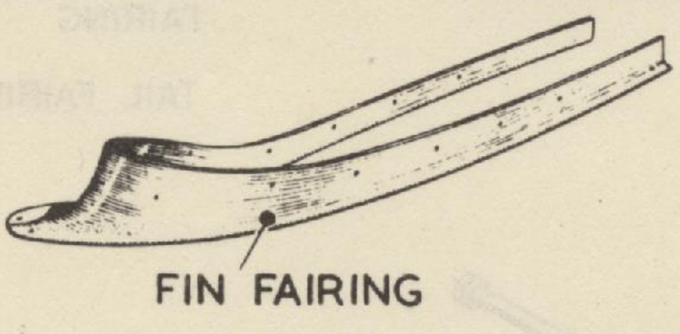

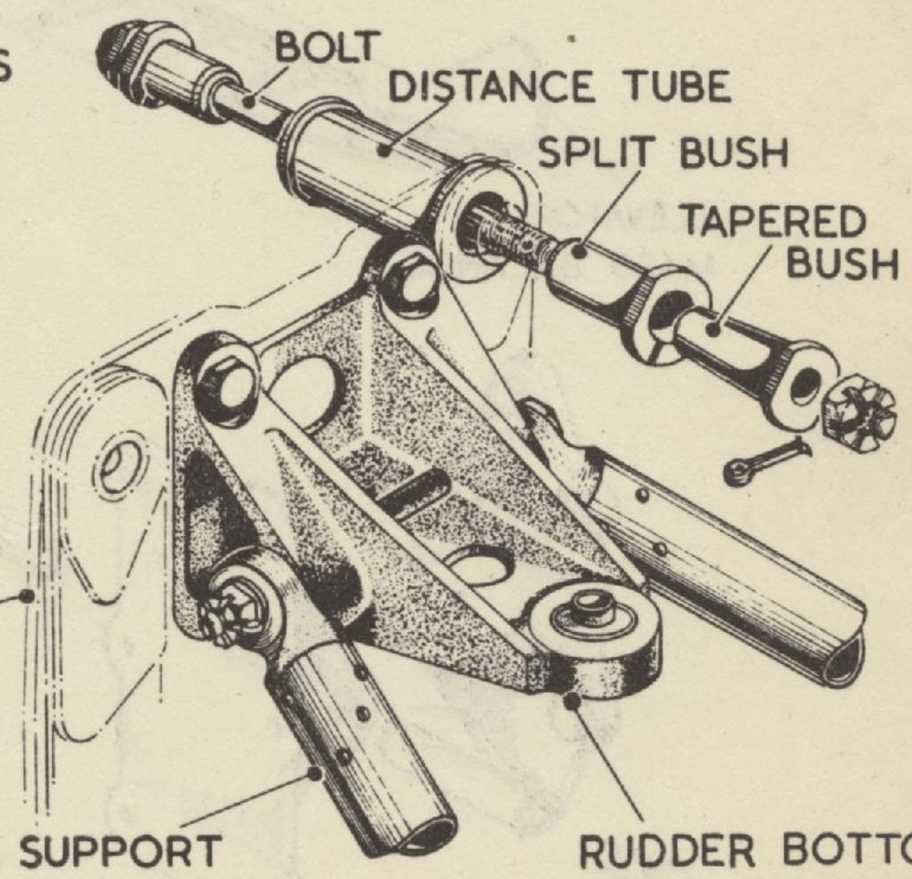

VIEW IN DIRECTION OF ARROW B

NOTE:- FOR TAIL UNIT STRUCTURE SEE FIG. 1

FIG. 2 FIN AND RUDDER

CHAPTER 4

FLYING CONTROLS

Chapter 4

FLYING CONTROLS

LIST OF CONTENTS

	Para.		Para.
General construction	1	*Elevator trim tabs*	6
Control column	2	*Rudder controls*	7
Aileron controls	3	*Rudder trim tab*	8
Aileron trim tab	4	*Servo mechanism*	9
Elevator controls	5		

LIST OF ILLUSTRATIONS

	Fig.		Fig.
Control column	1	*Rudder controls*	5
Controls in rear fuselage	2	*Rudder pedals*	6
Aileron controls	3	*Rudder control spring strut*	7
Elevator controls	4		

General construction

1. The aileron, elevator and rudder controls are operated by cables running over pulleys mounted on sealed ball-bearing and tubular connecting rods hinged on ball bearings. Short chains are also used in the aileron system and in the aileron and elevator trim tab controls. The layout of the controls and the position of turnbuckles for cable adjustment is shown in fig. 3, 4 and 5.

Control column (*fig. 1*)

2. The control column is a vertical member hinged at the bottom to give fore-and-aft movement for actuating the elevator controls, and has a W-shaped hand grip pivoted laterally for aileron control. A sprocket is connected to the hand grip boss which pivots in a plain bearing on a spindle ; the sprocket loads are taken by a ball bearing. The oval lower sprocket, the bottom hinge and the connecting rod bracket have ball bearings. A removable guard gives access to the aileron control chains and tie rods.

Aileron controls (*fig. 3*)

3. The control column upper sprocket is connected by chains and tie-rods to an oval sprocket at the base of the control column, which in turn, is connected through a universal joint to a torque tube. A cable pulley is attached to the rear end of this torque tube, and from the pulley, cables pass down the port side of the fuselage and round two sets of pulleys on bulkhead No. 3. After passing over the upper pulleys, one cable passes to each aileron differential pulley, over guide pulleys on the rear spar ; a balance cable between the differential pulleys completes the aileron control circuit. An adjustable connecting rod couples the aileron levers to the differential pulleys. The object of the oval sprocket on the control column is to provide a low gear ratio around the central position and a progressively increased gear ratio up to full aileron control travel. A stop plate bolted to the oval sprocket contacts a fixed stop on the control column to limit the total aileron control movement.

Aileron trim tab

4. Both ailerons have geared balance tabs only the port aileron tab being adjustable for trim by the control mounted on the instrument panel pedestal. The control wheel has a sprocket and chain, connected by cables to another chain and sprocket on the port trim tab jack. An adjustable control rod connects the jack to the geared balance lever and a second adjustable rod joins the tab to the balance lever. A bolt on the trim jack housing passes through a slot in the jack to act as a limit stop. The starboard trim tab can only be adjusted

when the aircraft is on the ground by the adjustable rod connecting the fixed balance lever to the tab.

Elevator controls (*fig. 4*)

5. The control column is coupled by an adjustable connecting rod to the elevator control layshaft underneath the pilot's seat. A quadrant type pulley is connected to this layshaft and cables run from the pulley along the port side of the fuselage to a round pulley on a countershaft mounted on bulkhead No. 4. An oval pulley, with a balance weight attached, is fitted on the opposite end of the countershaft, and from this pulley cables run to the lever on the elevator torque tube. The oval pulley gives a low gear ratio at small control angles and a progressively higher gearing at increasing angles. Control travel limit stops are fitted on the layshaft quadrant pulley.

Elevator trim tabs (*fig. 4*)

6. The elevator trim tabs are controlled by the handwheel on the port side of the pilot's seat. A Teleflex unit is connected to the handwheel and the cables, passing through conduits, are connected to stranded cables in the bomb bay. The cables continue along the port side of the fuselage to a chain and sprocket on the trim tab jack on the tail plane rear spar. Trunnion levers (*fig.* 2) transmit the jack movement through torque shafts to the trim tabs. The spring-loaded trim tab position indicator on the port wall of the cockpit is connected by a cable to a lever which is operated by an internally threaded block. A corresponding thread on the handwheel shaft engages with the block and rotation of the handwheel moves the block within the limits of a slot.

Rudder controls (*fig. 5 and 6*)

7. Each rudder pedal is mounted on a separate layshaft, hinged laterally below the instrument panel; a short link connects the two shafts. The pedals, of the pendulum type, are adjustable for leg reach by lifting the pedal blocks against the tension of the springs to the required ratchet plate slot. The control cables run from the layshaft levers, along the port side of the fuselage, to a pulley on a countershaft on bulkhead No. 4. Another pulley on the same tube is connected by the control cables to a horizontal lever (*fig.* 2) pivoted on the front face of bulkhead No. 6. The starboard end of the horizontal lever is connected by a spring-loaded strut to the rudder operating lever and the port end is connected to servo lever F (*fig.* 2).

Note . . .

The inner pulleys on the countershaft at bulkhead No. 4 *are used for the rudder controls and the two outer pulleys for the elevator controls.*

Rudder trim tab (*fig. 5*)

8. From the Teleflex control box mounted on the cockpit canopy structure, conduits are led down the port side of the fuselage to the rear of bulkhead No. 4. From this point a 5 cwt. cable, running through fairleads and over pulleys, is anchored to and wrapped round the grooved trim tab jack drum, fitted on the rear face of bulkhead No. 7. Trim tab control travel is limited by the jack ram movement. The tab jack is connected to one end of link lever E (*fig.* 2) the opposite end being connected by link G to the trim tab by an adjustable connecting rod.

Servo mechanism (*fig. 7*)

9. In addition to acting as a trim tab, the rudder tab is also arranged to give a servo action. The connecting strut, from the lever at bulkhead No. 6 to the rudder lever, is spring-loaded. Two internal springs, L and L1, are fitted, one on each side of a block R, rigidly attached to that part of the strut which is connected to the rudder lever. The spring adjusting rod M is free to slide in the block R, its travel being limited by the stops N and N1. The movable part G of the strut is attached to the lever on bulkhead No. 6, through the fork end H.

10. The operation is as follows:—Assume a load is applied in the direction of arrow Q against the reaction of the rudder, then, up to a predetermined intensity of load, G will have the same travel as K, i.e., the strut will not extend. After a certain load is reached, spring L will commence to close resulting in relative movement between G and K. This movement will increase in proportion to the load applied at the rudder pedal until stop N butts against the fixed block R, the tube G remaining in contact with N2 during this operation.

11. Similarly, if the load be applied in the opposite direction, i.e., in the direction of the arrow Q1, after a certain load is reached, spring L1 will commence to close, resulting in relative movement between G and K. This movement will increase until the end

of the sliding tube G butts against stop N2, N1 remaining in contact with the fixed block R during this operation.

12. As the opposite end of the lever at bulkhead No. 6 is also connected by connecting rod C (*fig.* 2), to a servo lever F, on the centre line of the rudder hinge, it will be seen that the servo lever has moved relative to the rudder lever D, thereby operating the tab through the link lever E and link G. The link lever is connected, at one end, to the trim control jack and imparts movement to the rudder trim tab independently of any movement transmitted by the servo mechanism. The springs in the operating strut are so adjusted as to start the rudder tab controlling with a reasonably light, but definite pressure on the rudder pedals. The adjustment is set before the aircraft is delivered and should not be altered.

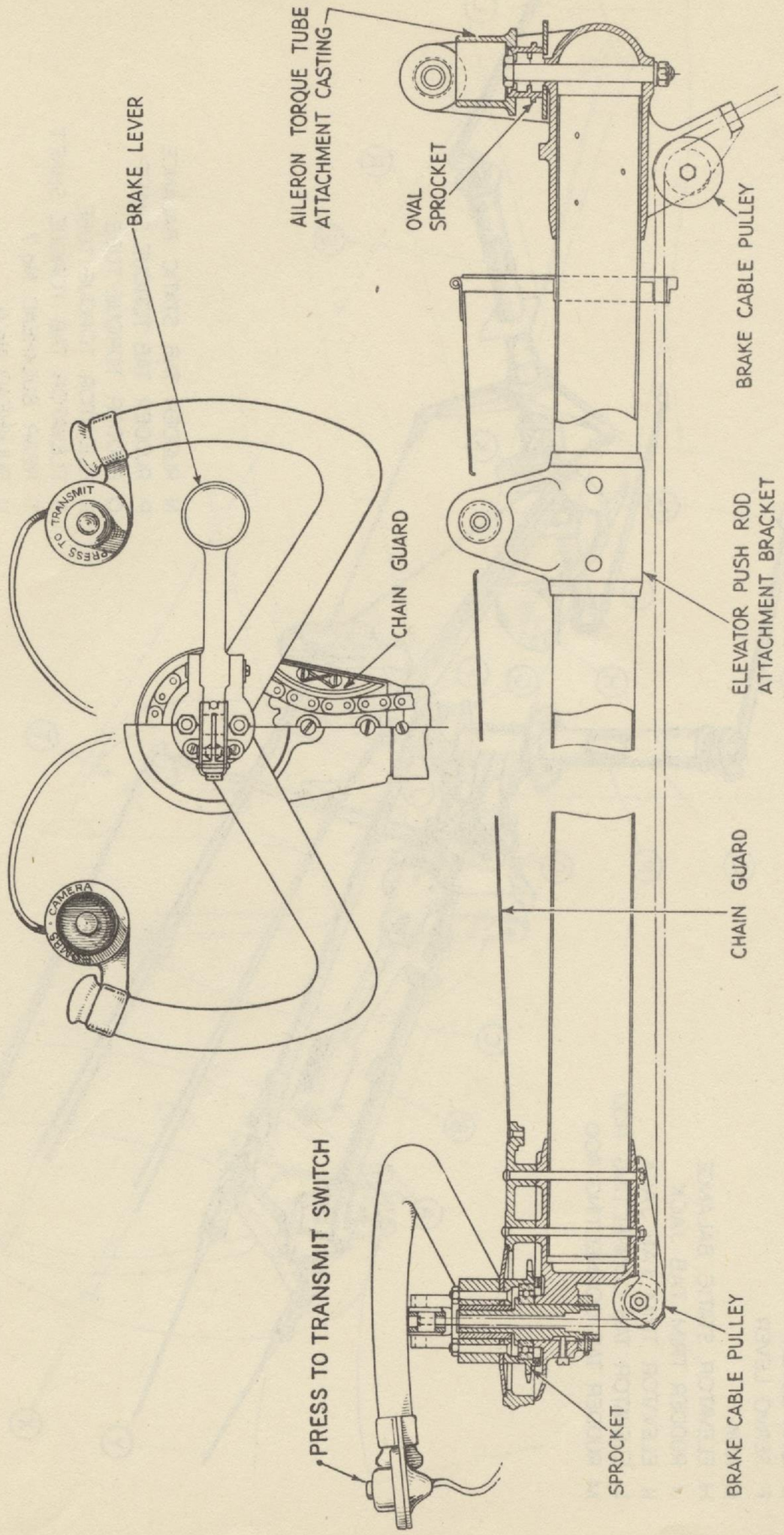

FIG. 1 CONTROL COLUMN

G2042 M27349 9/49 550 C.B.& S.LTD. GP.55.

A RUDDER STATIC BALANCE
B SPRING STRUT
C CONNECTING ROD
D RUDDER LEVER
E LINK LEVER
F SERVO LEVER
G LINK
H ELEVATOR STATIC BALANCE
J RUDDER TRIM TAB JACK
K ELEVATOR TRIM TAB JACK
L ELEVATOR TAB CONNECTING ROD
M RUDDER TAB CONNECTING ROD

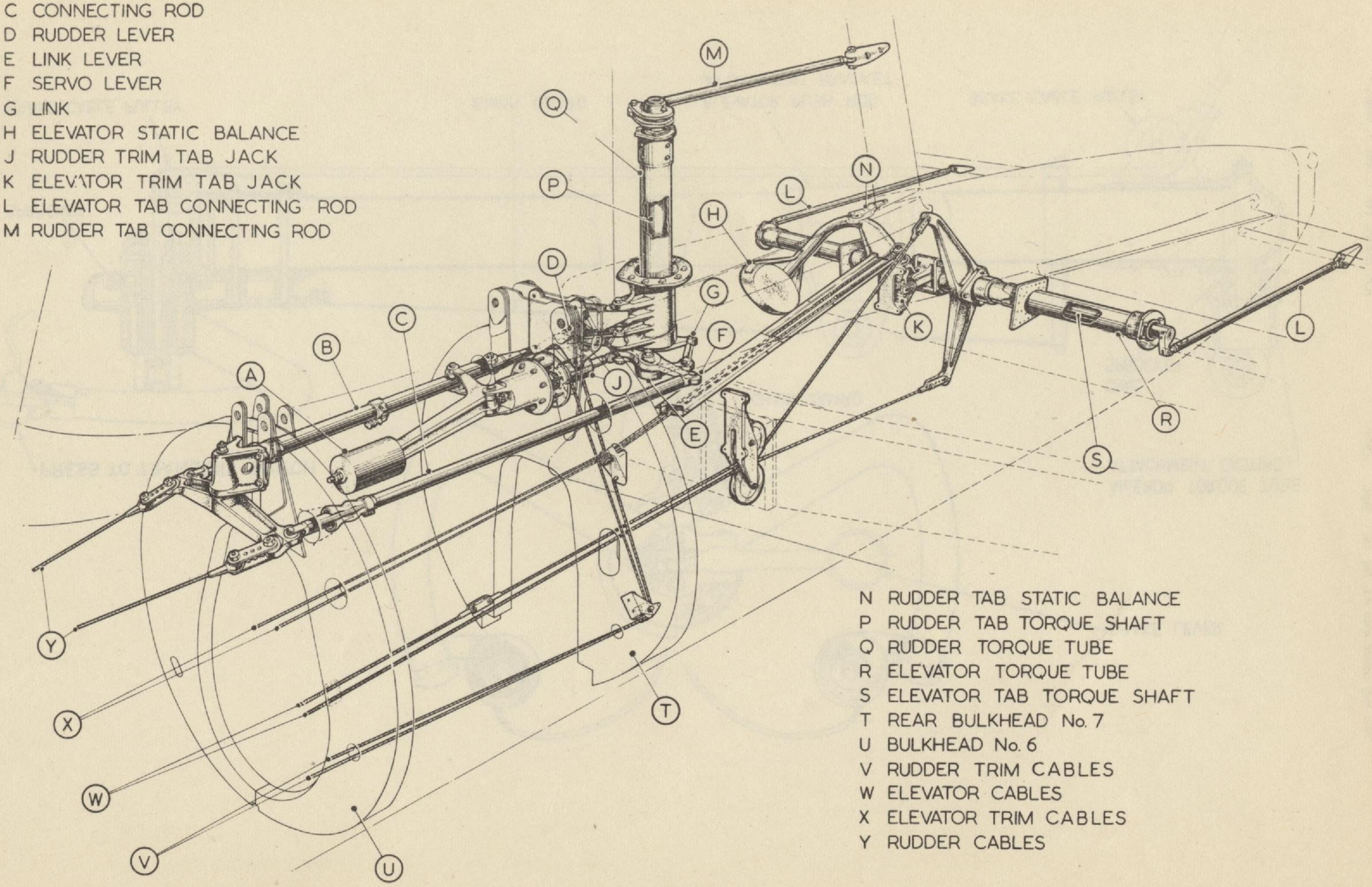

N RUDDER TAB STATIC BALANCE
P RUDDER TAB TORQUE SHAFT
Q RUDDER TORQUE TUBE
R ELEVATOR TORQUE TUBE
S ELEVATOR TAB TORQUE SHAFT
T REAR BULKHEAD No. 7
U BULKHEAD No. 6
V RUDDER TRIM CABLES
W ELEVATOR CABLES
X ELEVATOR TRIM CABLES
Y RUDDER CABLES

FIG. 2 CONTROLS IN REAR FUSELAGE

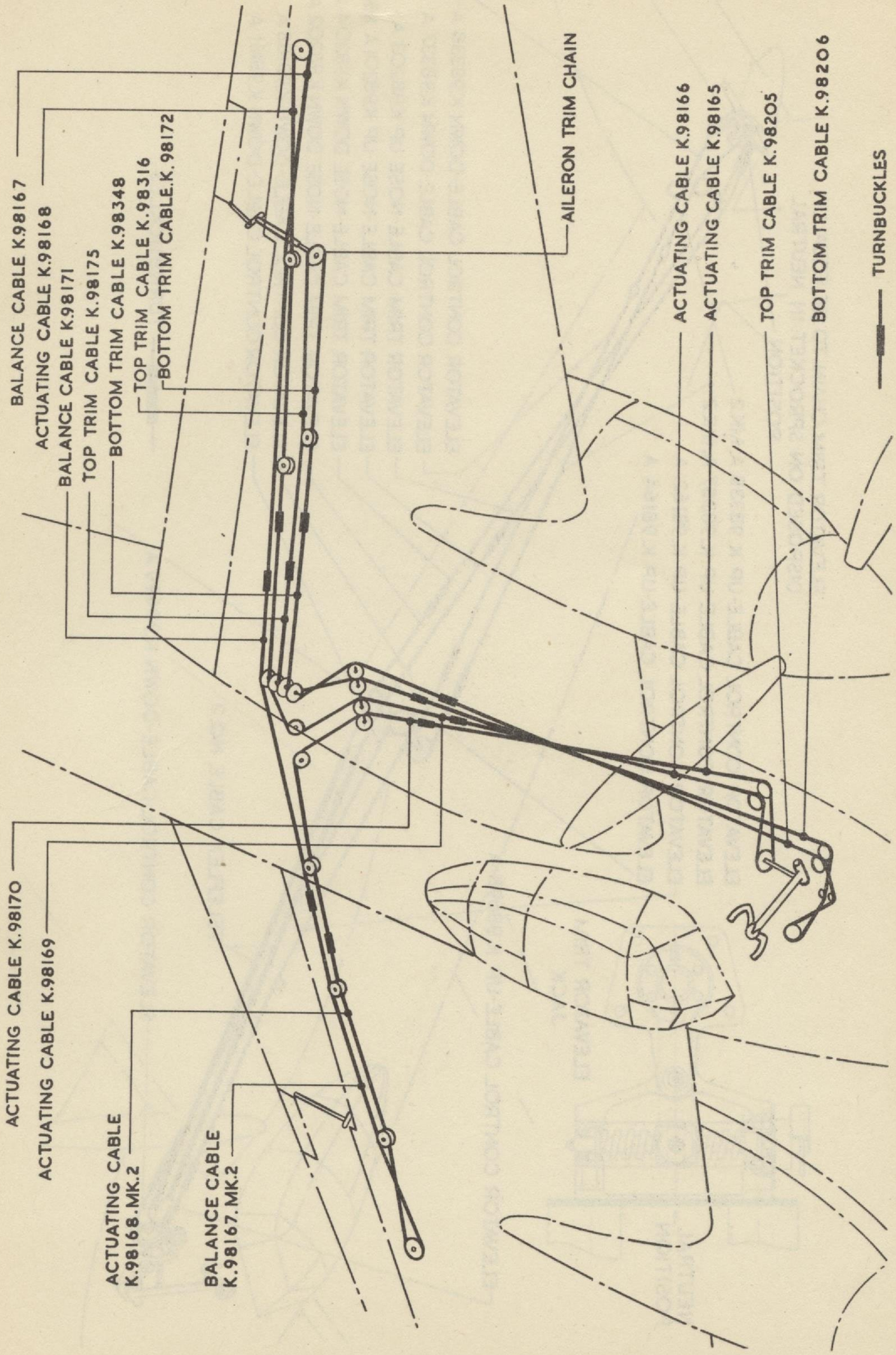

FIG. 3 AILERON CONTROLS

G2042 M27349 9/49 550 C.B.& S.LTD. GR55.

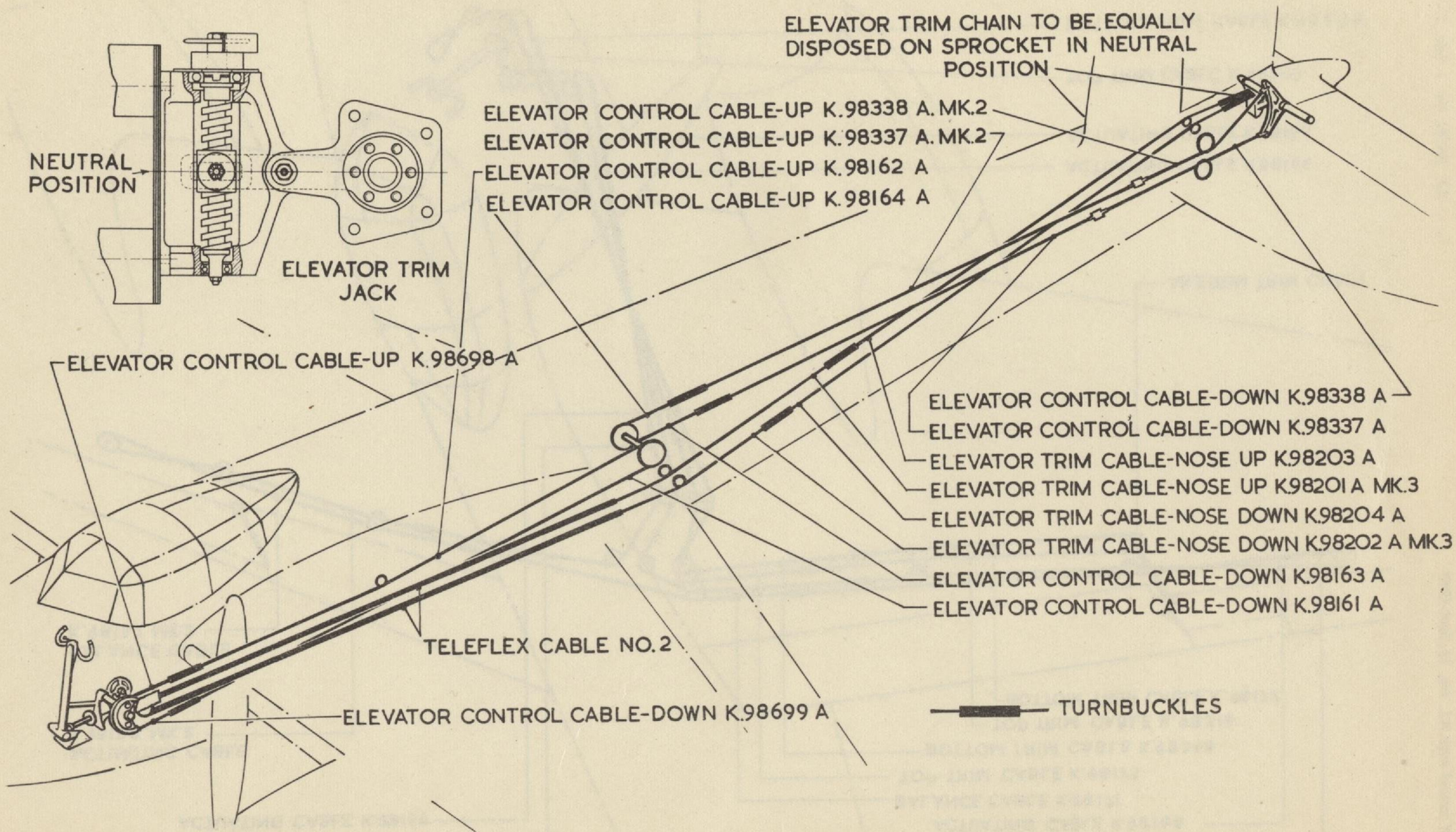

FIG. 4 ELEVATOR CONTROLS

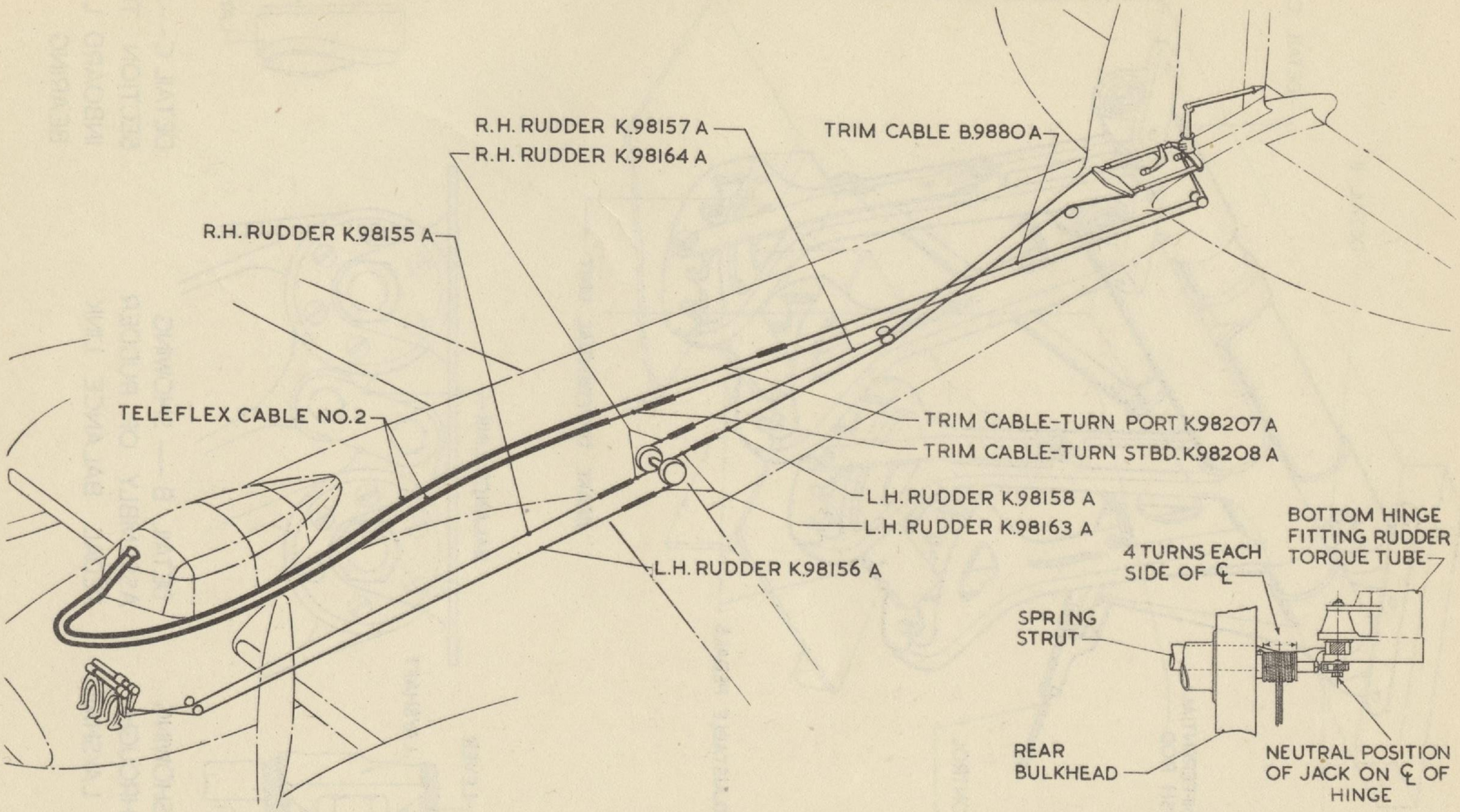

VIEW LOOKING INBOARD ON RUDDER TAB JACK

FIG. 5 RUDDER CONTROLS

G2042 M27349 9/49 550 C.B.& S.LTD. GP55.

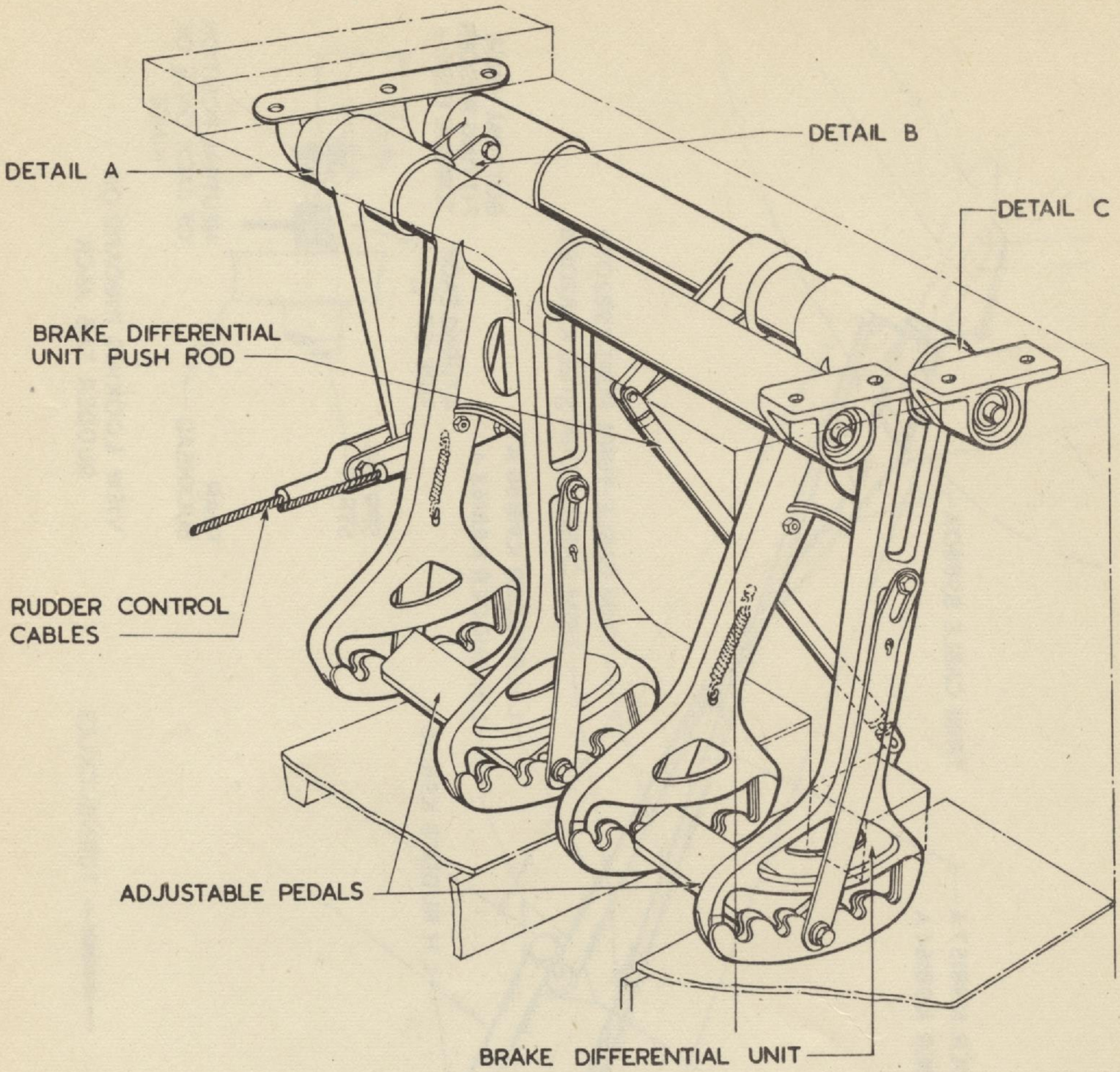

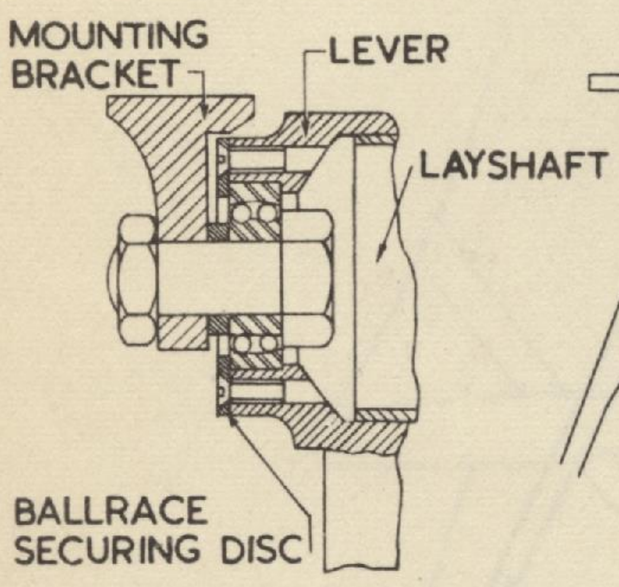

DETAIL A—SHOWING SECTION THROUGH OUTBOARD LAYSHAFT BEARING

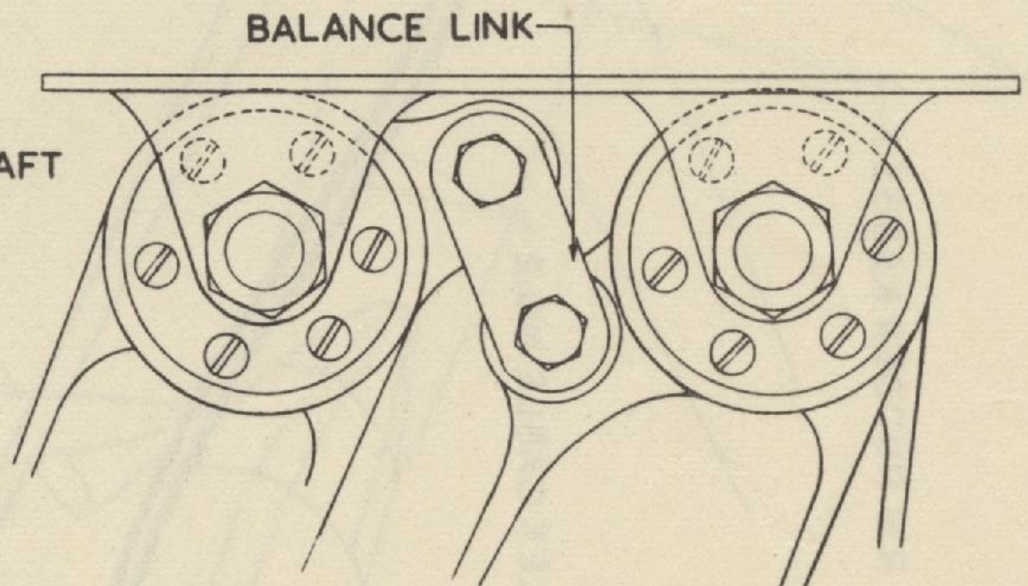

DETAIL B — SHOWING ASSEMBLY OF RUDDER PEDAL BALANCE LINK

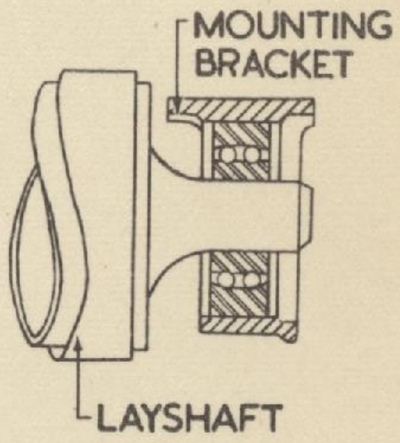

DETAIL C—SHOWING SECTION THROUGH INBOARD LAYSHAFT BEARING

FIG. 6 RUDDER PEDALS

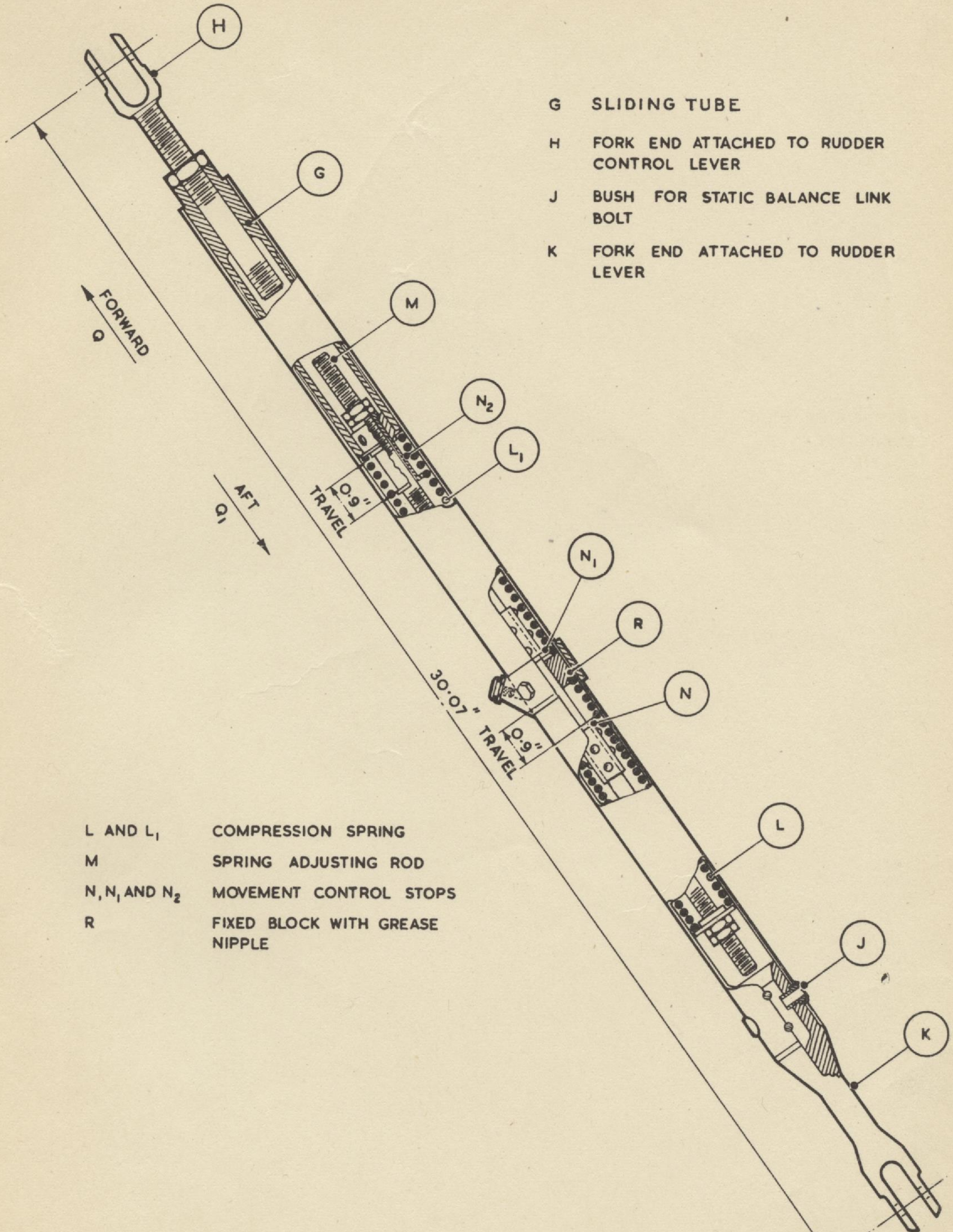

G SLIDING TUBE

H FORK END ATTACHED TO RUDDER CONTROL LEVER

J BUSH FOR STATIC BALANCE LINK BOLT

K FORK END ATTACHED TO RUDDER LEVER

L AND L_1 COMPRESSION SPRING

M SPRING ADJUSTING ROD

N, N_1 AND N_2 MOVEMENT CONTROL STOPS

R FIXED BLOCK WITH GREASE NIPPLE

FIG. 7 RUDDER CONTROL SPRING STRUT

G2042 M27349 9/49 550 C.B.& S.LTD. GP.55.

CHAPTER 5

ALIGHTING GEAR

Chapter 5

ALIGHTING GEAR

LIST OF CONTENTS

	Para.
Undercarriage	
General	1
Shock-absorber strut	3
Radius rods	4
Radius rod " up " latch	5
Radius rod " down " latch	6
Down lock indicator switch	7
Up lock indicator switch	8
Landing wheel assembly	9
Brakes	10
Tail wheel unit	
General	11
Retracting gear	13
Down lock	14
Hydraulic jacks	15

LIST OF ILLUSTRATIONS

	Fig.
Undercarriage	1
Assembly of tail wheel to fuselage	2

UNDERCARRIAGE (*fig. 1*)

General

1. The undercarriage consists of two interchangeable units, one under each engine nacelle. Each unit comprises two shock-absorber struts cross braced by a tubular structure, with the landing wheel axle clamped to the base of the struts, two jointed radius rods braced together below the joints, one hydraulic jack and a wheel complete with dual brake units.

2. The undercarriage can be completely retracted within the engine nacelles fairing, the wheel wells being covered by cable operated doors. These cables are connected at one end to the shock-absorber struts cross bracing, they then run over pulleys on the radius rod torque tubes and round rollers on the shock-absorber struts to join rubber cords inside the wheel doors. Fenders on the shock-absorber struts hold the doors open with the struts extended and during the initial stages of the retraction ; they also open the doors when the undercarriage is lowered. The rubber cords keep the wheel doors firmly against the fenders while the doors are open, and during the retracting and lowering operations, but when the doors are fully closed they are held in this position by the tension of the cables only. Spring-loaded cables are attached to the rear ends of the doors and maintain a tension on the doors in all attitudes. A latch mechanism on the starboard radius rods holds the undercarriage in the retracted position ; locking in the " down " position is by means of a spring-loaded plunger incorporated in each hydraulic jack.

Shock-absorber strut

3. This is of the rubber-in-compression type, with an oval sheet steel casing in which is assembled the piston, eleven full rubbers, one half rubber with their spacer plates and one rebound rubber. The piston tube is attached to a bakelite piston and passes through a bakelite guide at the bottom of the strut casing. On the lower end of the strut is a socket to which the axle end fittings are clamped. There is no hydraulic or pneumatic mechanism in the strut and no adjustment is possible other than the addition of half rubbers or the complete renewal of all rubbers. For an illustration of the strut, and for dismantling and assembly operations, refer to Sect. 4, Chap. 3.

Radius rods (*fig. 1*)

4. Both the inboard and outboard radius rods have knuckle joints at their centres and consist of steel tubes with hinged end fittings permitting the rods to fold upwards.

A large diameter torque tube connects the bottom halves just below the centre joints and transmits the loads imposed by the hydraulic jack to the outboard radius rod. The hydraulic jack is attached near the centre joint of the upper half of the starboard radius rod to a mechanical latch, which retains the undercarriage in the retracted position.

Radius rod " up " latch (*fig. 1*)

5. The mechanical " up " latch comes into operation when its upper bevelled surface contacts the fixed lock bracket fitted to the wing rib. This causes the latch to rock against the tension of the retaining spring until the latch clears the bracket, when the spring pulls the latch over the top of the bracket. The latch is released by the initial movement of the jack ram as it extends to lower the main wheel.

Radius rod " down " latch

6. A latch mechanism, illustrated in Sect. 4, Chap. 3, fig. 29 is attached to the lower end of each hydraulic jack body. It houses a spring-loaded plunger which engages in a tapered groove in the jack ram, after the ram has extended fully. This position is indicated in the illustration. When undercarriage UP is selected, hydraulic fluid under pressure enters the latch body and applies pressure on the piston which is screwed to the plunger. At the same time, pressure is also applied to the valve, holding it on its seat until the plunger is withdrawn by the movement of the piston. When the plunger has cleared the ramp on the jack ram, the plunger stem has moved in the valve sufficiently to lift it off its seat and admit fluid into the jack body to retract the ram. In all positions of the jack ram, other than when fully extended, the plunger is withdrawn and the valve held open. After undercarriage DOWN is selected, the ram is extended and the fluid displaced is passed through the valve to the reservoir. The valve remains open until returned by the spring and retaining plate, while the plunger is forced down under spring pressure into the ram groove. Thus, the jack cannot be retracted until the plunger is fully withdrawn, and the latch engagement is entirely mechanical.

Down lock indicator switches

7. These micro switches are operated by the radius rod " down " latches. A leaf spring maintains contact between the striker pin and the profile machined on the extension of the spring-loaded plunger. The withdrawal of the plunger (*described in para.* 6) causes the striker pin to move outwards, thereby operating the micro switch through the adjustable contact screw on the leaf spring.

Up lock indicator switch

8. A micro switch is bolted to the wing rib in line with the " up " latch bracket, and is operated through a leaf spring and plunger by the " up " lock latch when it has engaged with the latch bracket.

Landing wheel assembly

9. The wheel is a Dunlop, Type A.H.8079, having combined roller and thrust races, mounted on a tubular axle with forged steel end fittings. The end fittings are spigoted into the shock-absorber fittings. The axle assembly is rigidly clamped to the shock-absorber struts by steel saddles, and four high tensile steel bolts. The brake units are bolted to a flange on the brake anchor plates, and brake reactions are thus transferred to the shock-absorber struts through the axle end fittings. The axle is located in the end fittings by caps secured with a tie-rod.

Brakes

10. The brakes are Dunlop pneumatic, particulars of which will be found in A.P.2337, Vol. I. For the brake system, refer to Sect. 4, Chap. 3 and Sect. 9.

TAIL WHEEL UNIT (*fig. 2*)

General

11. The tail wheel unit, of the rubber-in-compression type, is fully castoring and retractable into the tail cone fairing. A cantilever fork, which pivots on lugs forming part of the swivel component of the shock-absorber unit, supports the tail wheel, its axle being retained in the fork by end caps secured by a tie-rod. Wheel loads are transmitted to rubber blocks inside the unit by a short link which connects the fork to the shock-absorber piston. The shock-absorber unit is attached to the fuselage rear bulkhead at pivot brackets fitted to the bottom of the bulkhead which has a recess cut in it for wheel retraction. A mechanical lock in the wheel *down* position is obtained when a spring-loaded plunger at the top of the unit enters a socket on the rear bulkhead. A spring-loaded self-centring cam is incorporated internally at the top of the shock-absorber unit. This

cam holds the tail wheel central in flight but permits full castoring when taxying. Adjustable friction dampers are fitted on each side of the cantilever fork hinge.

12. The main body A (*Sect.* 4, *Chap.* 3, *fig.* 19) is an electron casting, containing a rotatable cylinder B in which six main rubber blocks C, separated by five spacer plates, one rebound rubber block D and piston assembly E are housed. The cylinder can rotate in the bearings F and G but, under " no load " conditions, is returned to the central position by the action of spring H on the self-centring cam J. Vertical loads from the tail wheel are transmitted by the piston, rubber blocks and the top plate K to the main body through A the thrust race L.

Retracting gear (*fig.* 2)

13. The retraction gear consists of a hydraulic jack which operates in conjunction with the main undercarriage hydraulic system. The jack ram is connected to the cranked lock plunger withdrawing lever, fitted at the top of the shock-absorber unit, and the jack cylinder is attached to pivot brackets just forward of the tail wheel unit hinge. When undercarriage UP is selected, the first movement of the jack ram withdraws the lock plunger until the cranked lever slot contacts the stop bolt. The plunger is then clear of the socket and the tail wheel unit commences to retract. With the jack ram fully retracted, the cantilever fork just contacts rubber " up " stops fitted to struts from the tail plane front spar; the tail wheel is housed in a fixed mudguard.

Down lock (*fig.* 2)

14. The " down " lock is a spring-loaded plunger housed in the tail wheel shock-absorber casting; this plunger is bolted to a lock bar which is in turn bolted to the cranked withdrawing lever side plates. When the tail wheel is lowered, a chamfer on the plunger contacts the socket, forcing the plunger into its housing until the plunger is aligned with the socket opening. The plunger then enters the locking socket. Should the plunger fail to enter the socket, a safety latch fitted just forward of the socket will prevent the tail wheel from an involuntary retraction. There is no " up " lock; the wheel is held in the retracted position by a hydraulic lock which is maintained by a flow control valve.

G2041 M27348 9/49 550 C.B.&S.Ltd. Gp.30

① UP-LOCK

② UP-STOP

③ JACKING ATTACHMENT OUTBOARD ONLY

④ SHOCK - ABSORBER STRUT

⑤ WHEEL DOOR GUIDE

⑥ ADJUSTABLE STOP

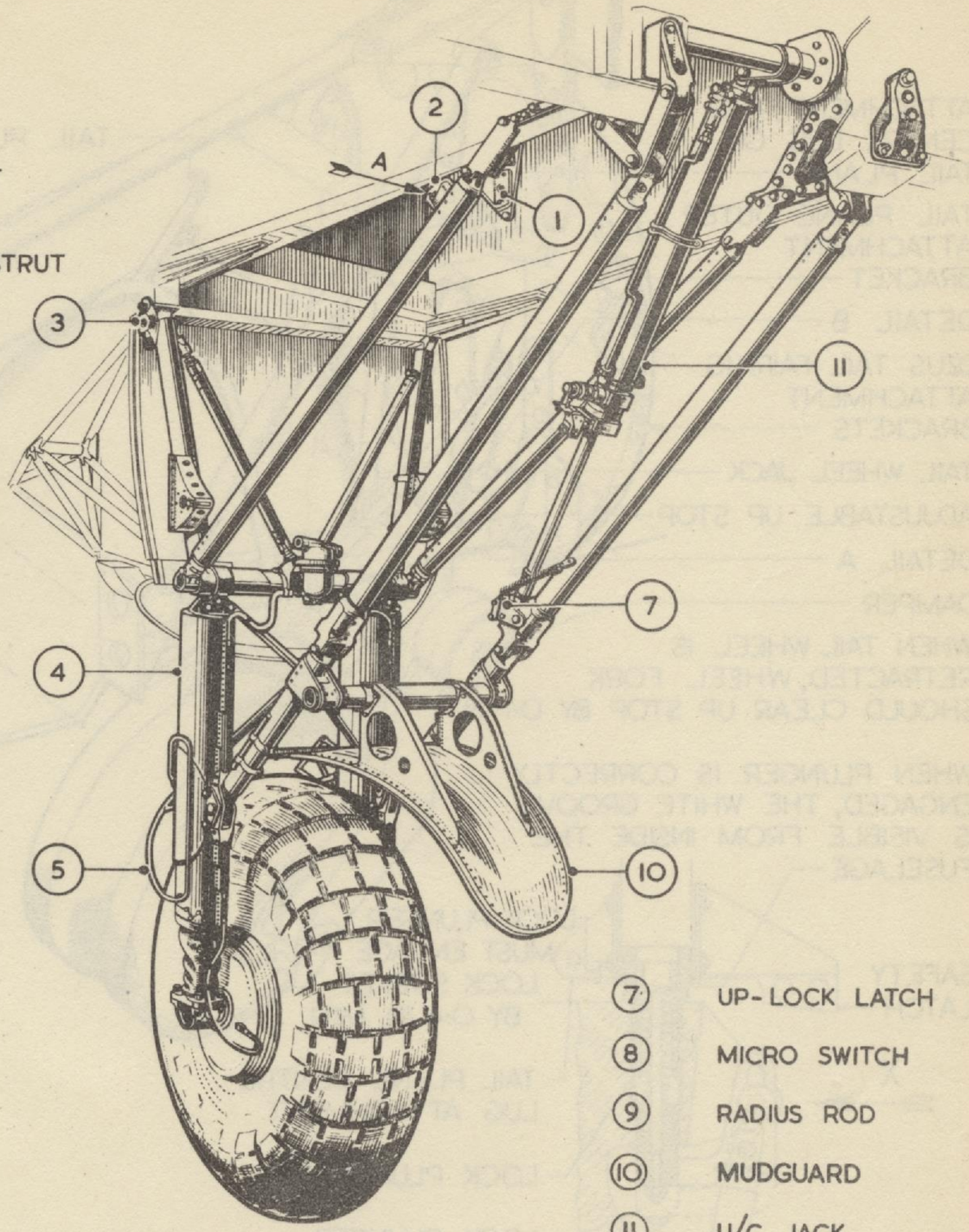

⑦ UP-LOCK LATCH

⑧ MICRO SWITCH

⑨ RADIUS ROD

⑩ MUDGUARD

⑪ U/C JACK

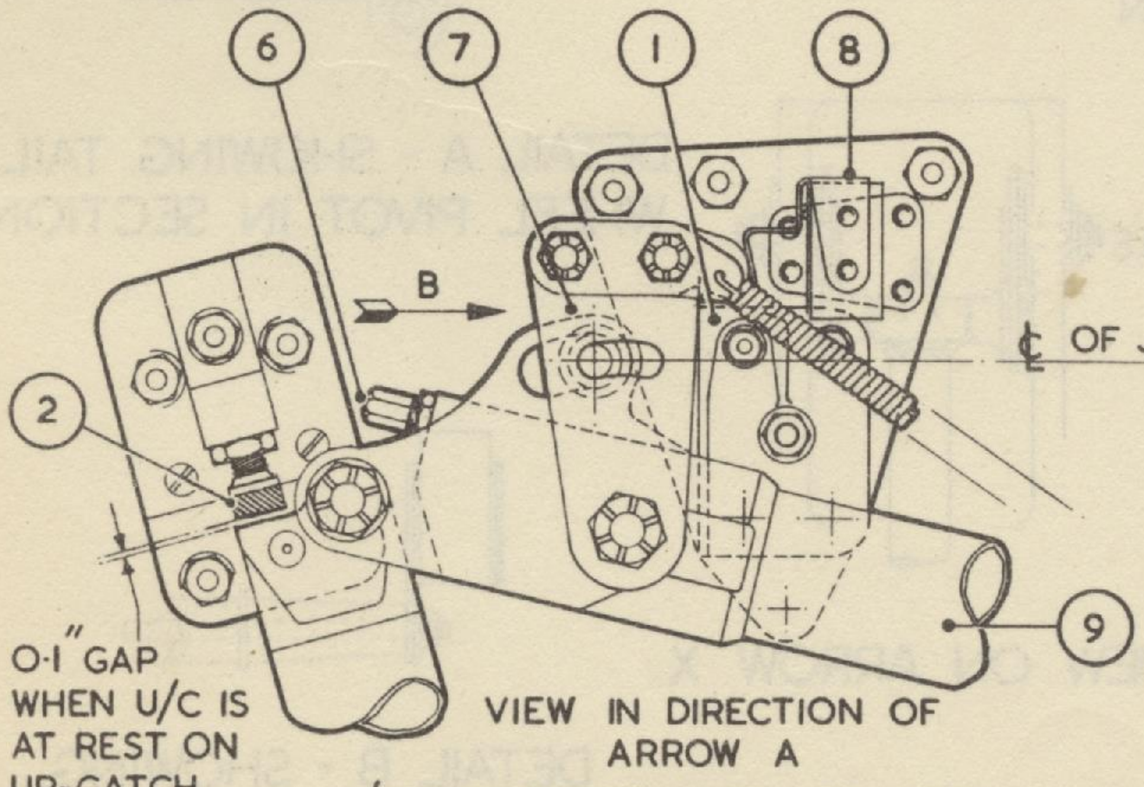

U/C UP-STOP AND UP-LOCK

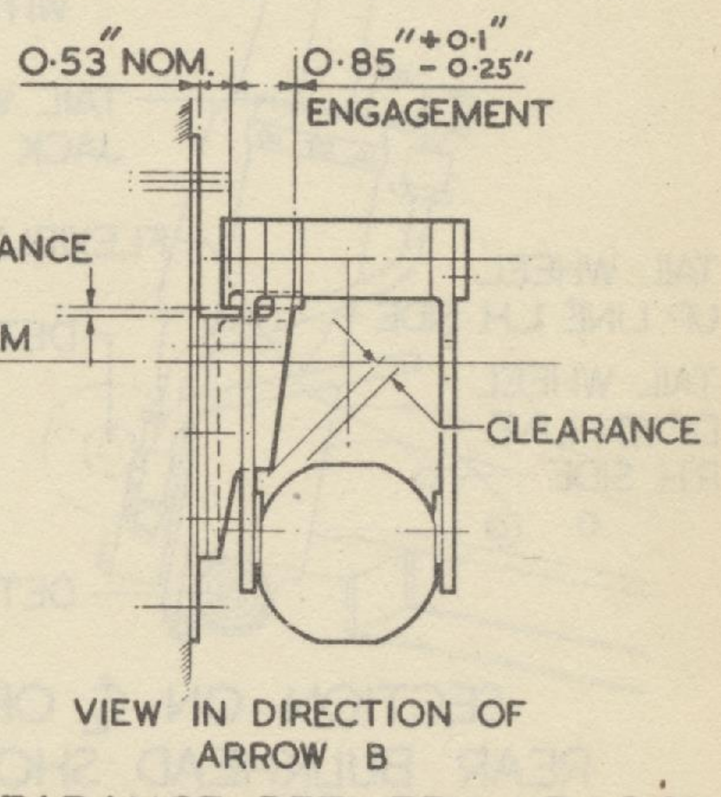

CLEARANCE BETWEEN UP-LOCK LATCH AND UP-LOCK

FIG. 1 UNDERCARRIAGE

G2042 M27349 9/49 550 C.B.& S. LTD. GP55.

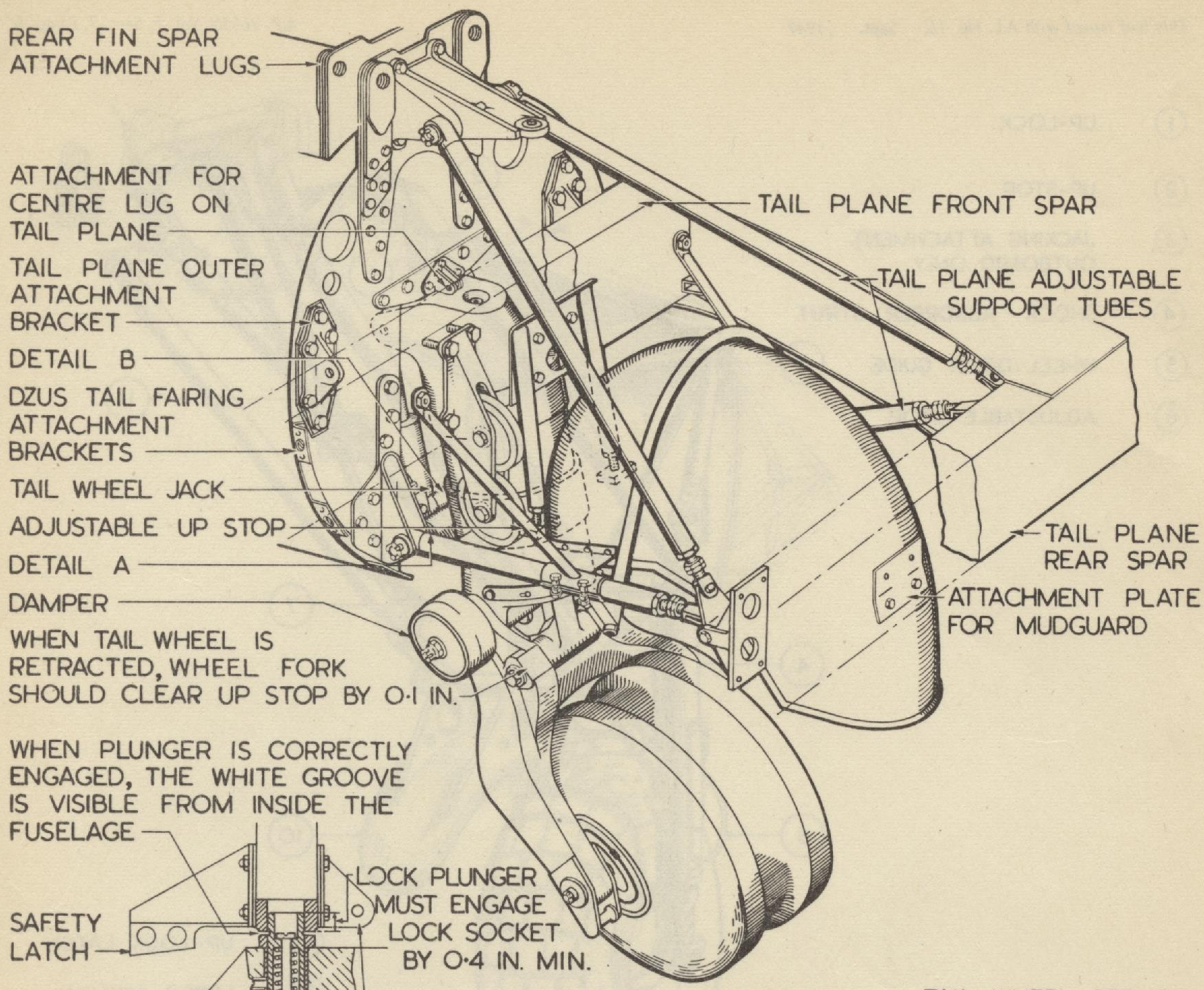

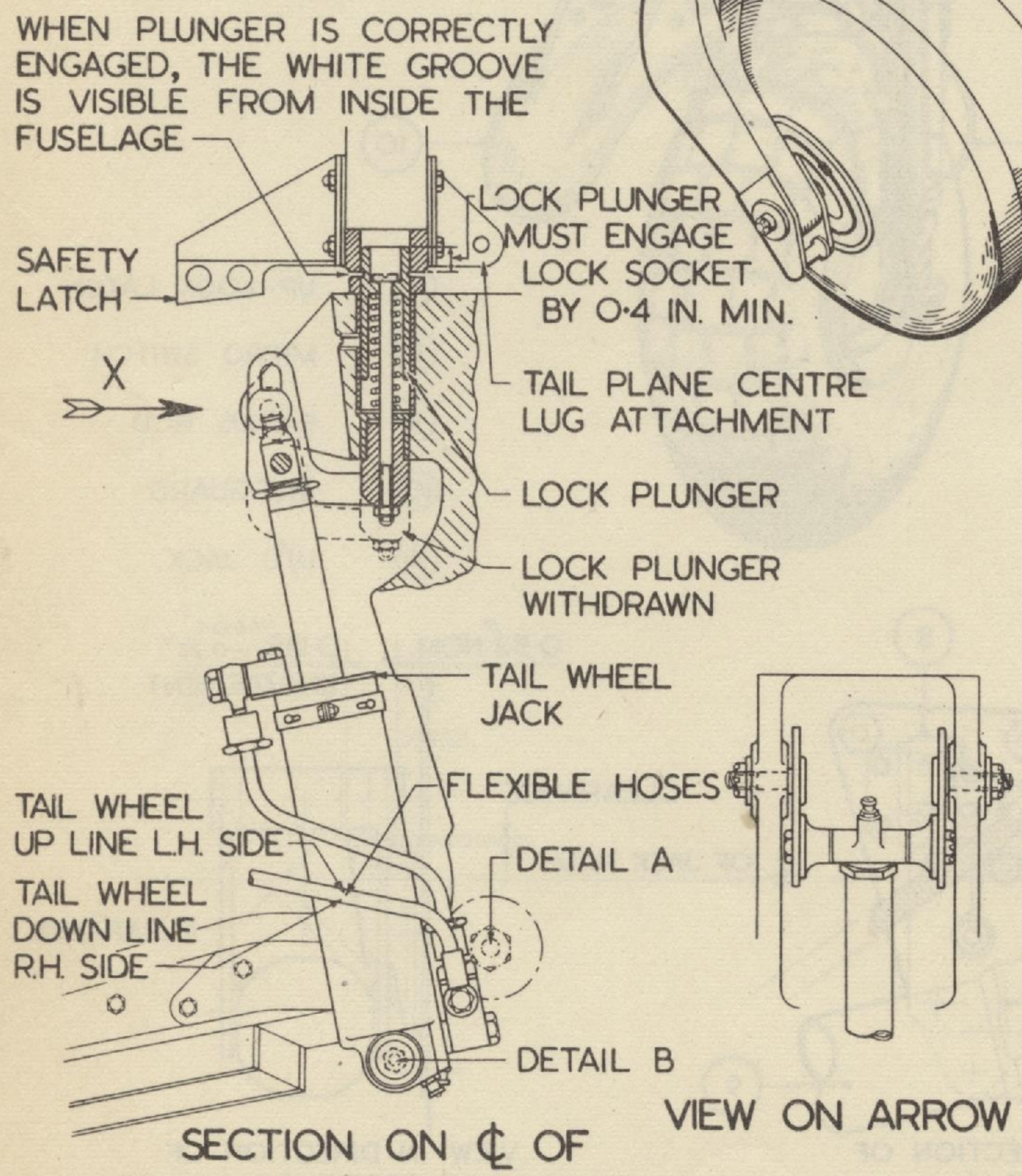

SECTION ON ℄ OF REAR BULKHEAD SHOWING ENGAGEMENT OF DOWN LOCK.

VIEW ON ARROW X.

DETAIL A - SHOWING TAIL WHEEL PIVOT IN SECTION.

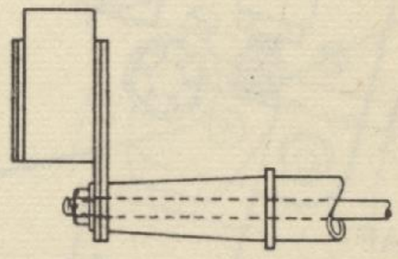

DETAIL B - SHOWING TAIL WHEEL JACK PIVOT.

FIG. 2 ASSEMBLY OF TAIL WHEEL TO FUSELAGE

This leaf issued in reprint
December, 1947

SECTION

8

ENGINE INSTALLATION

123 M/C M45854 2/48 200 C.B.& S.Ltd. Gp.30

Section 8

ENGINE INSTALLATION

LIST OF CONTENTS

	Para.		Para.
Introduction	1	*Radiator air duct control*	17
Engine accessories	2	*Thermostatic relief valve*	18
Fuel system	4	*Intercooling system*	19
Fuel pressurising system	7	*Air-intake control*	
Fuel transfer system	9	*Air filter*	20
Oil system	10	*Hot and cold air supply*	21
Oil cooler and viscosity valve	12	*Pipe couplings*	22
Engine accessories drain tank	14	*Engine controls*	23
Cooling system	15	*Superchargers*	24
Radiator and thermostatic by-pass valve	16	*Fire-extinguishing system*	25

LIST OF ILLUSTRATIONS

	Fig.		Fig.
Fuel gallery	1	*Oil system*	8
Simplified fuel system diagram	2	*Main oil tank*	9
Fuel system	3	*Engine cooling system*	10
Fuel pressure venting system	4	*Engine controls*	11
Fuel transfer system	5	*Engine control box*	12
Fuel pressure control valve	6	*Air-intake*	13
Fuel control panel	7	*Fire-extinguishing system*	14

Introduction

1. The aircraft is powered with one Merlin 113A and one Merlin 114A, or two Merlin 114A engines, which drive de Havilland 3-bladed hydromatic propellers, Type A5/164 or A5/165, with constant-speed units, Type AY.122. Engine cooling is effected by the circulation of a mixture of 70 per cent. clean mains water and 30 per cent. ethylene glycol, to which has been added a corrosion inhibitor, NaMBT concentrate, at the rate of 40 c.c. per gallon, or 70 per cent. water and 30 per cent. fluid alcohol, AL-3 (*refer to Sect.* 4, *Chap.* 3, *para.* 58). Electro-pneumatic control of the air-intake filters and the induction charge temperature is effected by shutter and jacks fitted in the undershields. The engine bearer frames, which are interchangeable port and starboard, are tubular steel structures bolted to the wing front spar and to the fixed portion of the undercarriage structure. Engine starting is by a directly-coupled electric starting motor and a booster coil, for which the 24-volt current may be supplied from an outside source through a socket on the port side of the fuselage, aft of the wing, or from the aircraft accumulators. Priming is by a hand-operated pump mounted in each engine nacelle. Feathering and unfeathering of each propeller is effected by an electrically-driven pump which obtains its oil supply from a reserve compartment in the base of each oil tank. The engines are fitted with an automatic fire-extinguishing system, the bottles being fitted in the rear of each nacelle fairing.

ENGINE ACCESSORIES

2. The following engine-driven accessories are installed :—

Port engine		Starboard engine
Hymatic air compressor, Type SH6/2		Propeller governor, Type AY.122
Propeller governor, Type AY.122		Vacuum pump, Type B3X, Mk. 3
Vacuum pump, Type B3X, Mk. 3		Tachometer generator, Mk. 4
Tachometer generator, Mk. 4		Lockheed hydraulic pump, Mk. 6
Lockheed hydraulic pump, Mk. 6		Electric generator, Type 02
Electric generator, Type U2	or	
Electric generator, Type U0	or	Electric generator, Type U0
Electric generator, Type HX2		Electric generator, Type HX2

3. Cooling air ducts lead from each intercooler radiator entry to the electric generator and the vacuum pump; on the port engine only, a pipe from the wing radiator duct is connected to a deflector fitted round the air compressor. A relief valve, Stores Ref. 37J/102 and an oil separator, Stores Ref. 37J/30 are fitted in the vacuum system on each engine.

FUEL SYSTEM (*fig. 2 and 3*)

4. Fuel is contained in five pairs of light alloy tanks housed in the wing. Two coupled long-range tanks may be fitted in the bomb bay, and two wing drop tanks may be installed if required. The tank capacities are given in the Leading Particulars. Continuous reading electrical fuel contents gauges, controlled by the services switch, are fitted in the cockpit and indicate the contents of each pair of tanks, and long range tanks; there is no contents gauge for the wing drop tanks. Details of filling and draining points are given in Sect. 4, Chap. 2.

5. The fuel gallery (*fig.* 1) is on the starboard side of the bomb bay and incorporates disc-type non-return valves to prevent the flow of fuel from one pair of tanks to another. Another non-return valve is fitted between the fuel gallery and the Amal valve. The inner, centre and long-range tanks are connected direct to the gallery, from which fuel is delivered to both engines through a fuel cooler situated just forward of the gallery. An electrically-driven booster pump, controlled by switches in the cockpit, is fitted between the fuel cocks and the engine-driven fuel injection pumps. The outboard pairs of tanks feed directly to their respective engines and are not coupled to the fuel gallery. A fuel control cock for each engine is situated on the rear face of the front spar in each undercarriage wheel well. They are of the four-way open bottom type, operated by cables, chains and sprockets from the cockpit control panel. There are three positions OUTER TANKS—OFF—MAIN SUPPLY (*fig.* 7). Each pair of tanks has a drain plug, and a check valve on the outlet side which permits uncoupling of the delivery pipes without loss of fuel. Fuel filters, Type B, are mounted on the rear of the firewalls. Fuel pressure is controlled by the fuel injector pump relief valves and no separate pressure regulators are provided, except when the long-range tanks are fitted; then, an immersed pump transfers the fuel, the pressure being regulated by an Amal valve fitted in the pipeline between the tanks and the fuel gallery. The immersed pump has a control switch fitted in the cockpit and a warning light indicates when the long-range tanks are empty.

6. The hand-operated priming pumps are fitted on the starboard side of each engine nacelle and the supply is normally taken from the outer pair of tanks but a high volatile fuel from an outside source may be used when connected to the two-way cock marked NORMAL - SPECIAL MIXTURE. The hose for connection to the high volatile fuel supply is stowed on a dummy plug when not in use.

Fuel pressurising system (*fig. 4*)

7. The inner, centre (and long-range, if fitted) tanks are vented by a pressure system operated from the pressure side of the starboard engine vacuum pump, with an atmospheric pressure control valve interposed in the system. The control valve is situated between the tanks and the vent outlet and functions to maintain air pressure in the fuel system above a pre-determined altitude, the valve being controlled by the altitude capsule E (*fig.* 6). The capsule E extends or contracts with the increase or decrease in altitude and by means of the spindle C controls the position of valve A relative to its seating. Air from the vacuum pump is allowed to pass through the valve to atmosphere at low altitudes, the passage being progressively reduced as the altitude is increased. At high altitudes, the valve A is in the position shown in fig. 6 and by restricting the air flow to atmosphere causes pressure to be applied in the tanks. To prevent excessive pressure building up, a spring-loaded relief valve B operates. This valve is in the form of a cup; on the end of the main valve spindle a piston D is fitted which is a reasonably tight fit in the cup and thus acts as a damper unit for both the main valve A and the relief valve B, preventing valve "chatter" and "bouncing." In addition, to prevent restriction in the fuel supply should the air supply fail with the valve A in the closed position, a separate vacuum relief valve is incorporated.

8. A manually-operated change-over cock, positioned above the main fuel cock control panel, enables the pilot or navigator to vent the pressure from the vacuum pump

to atmosphere should a fuel leak occur. The pressure venting cock is normally locked in the ON position by thin copper wire.

Fuel transfer system (*fig. 5*)

9. Air pressure from the pressure side of the port vacuum pump is utilised to transfer fuel from the wing drop tanks to the outer pairs of tanks. A float valve, in each outboard tank filler cap, automatically controls the rate of fuel transfer until the drop tanks are empty and then acts as a vent. A relief valve in the air supply lines on the rear spar maintains the transfer air pressure at a maximum of $2\frac{3}{4}$ lb. per sq. in. The transfer cock is mounted on the side of the fuel cock control panel and when turned to OFF, vents the drop tanks to atmosphere.

OIL SYSTEM (*fig. 8*)

10. The main oil tank (*fig.* 9) is installed aft of each firewall in the wheel wells, and incorporates a rapid warming chamber, and a filter which may be withdrawn, without loss of oil, from the tank. A stack-pipe arrangement ensures a reserve of one gallon for feathering the propeller ; the reserve is in circulation in the engine oil system but cannot be consumed by it. The tank is normally filled to the filler neck level with the aircraft in the tail down position thus leaving an air space ; the tank contents can be checked by a built-in dipstick. Venting of the oil tank is controlled by a double-acting valve situated in the pipeline from the tank to the engine wheel case.

11. When the long range fuel tanks and the wing drop tanks are carried, an additional oil tank will be fitted in the fuselage just forward of No. 3 bulkhead. This tank is divided into two equal compartments which are connected by pipes to each main oil tank. Air from the pressure side of the port vacuum pump transfers the oil from the long range tank when the oil transfer cocks, located in rear of the pilot's seat, are ON. If the fuel transfer cock is ON, the fuel transfer relief valves will limit the air pressure in the long range oil tank to $2\frac{3}{4}$ lb. per sq. in., but when set to OFF the air pressure will rise to 4 lb. per sq. in. and be controlled at that figure by a relief valve incorporated in the oil separator, which is connected between the long range oil transfer air pipe and the vent to atmosphere.

Oil cooler and viscosity valve

12. After passing through the engine, the oil enters the viscosity valve which is attached to the rear of the engine auxiliary bulkhead. This viscosity valve directs the oil back to the tank, by-passing the cooler until the oil, due to increasing temperature, has dropped to a predetermined viscosity value ; the valve then progressively controls the amount of oil by-passed until, at high temperatures, it all passes through the cooler.

13. The oil coolers are bolted to the rear flanges of the coolant radiator blocks. Air flow through the coolers is identical with that for the engine coolant radiators, the control of which is described in para. 17.

ENGINE ACCESSORIES DRAIN TANK

14. A small tank is attached to each port lower engine mounting member, to which the drain pipes from the hydraulic pump, fuel pump supercharger, and engine vent are connected. A drain pipe from the tank discharges the contents at the rear of each nacelle.

COOLING SYSTEM (*fig. 10*)

15. The coolant, approximately $12\frac{1}{2}$ gallons for each engine system, is circulated by the engine coolant pump and the temperature is controlled by a thermostatic valve at 105 deg. C, thereafter by an adjustable radiator flap controlled from the cockpit. A small section of the port coolant radiator next to the fuselage is used for cockpit heating and a similar section on the starboard radiator for heating the bomb bay and de-misting the bomb aimer's window.

Radiator and thermostatic by-pass valve

16. The radiator and thermostat for each engine are housed inside the leading edge of the wing between the fuselage and the engines. Coolant from the circulating pump enters the thermostat and at temperatures up to 85 deg. C is by-passed direct to the cylinder blocks. At higher temperatures, the by-pass valve progressively closes as the thermally controlled valve opens, and at temperatures of 105 deg. C. and over, all coolant entering the

thermostat passes through the radiator. For details of the thermostat, refer to A.P.1464 C. The coolant flow through the heater sections of the radiator is not controlled in any way by the thermostat.

Radiator air-duct control

17. Air enters the radiator through the slot in the wing leading edge and exhausts from another slot on the undersurface ; the slot opening is controlled by a hinged flap. Under normal conditions the flaps are closed, restricting the air flow through the radiator. Flap operation is controlled by two folding handles (one for each flap) on the starboard side of the fuselage, rear of junction box B, each having a flap position indicator marked RAD. FLAPS CLOSED - OPEN. The handles operate screw jacks through Teleflex cables and chains giving individual control to each radiator flap between the open and closed settings. The coolant temperature limitations are given in A.P.2653N—P.N.

Thermostatic relief valve

18. A two-way thermostatic relief valve, fitted to each coolant header tank, has a maximum working pressure of about 15 lb. per sq. in. at 125 deg. C ; normal working pressure is $8\frac{1}{2}$ to $12\frac{1}{2}$ lb. per sq. in. at 85 to 110 deg. C. The relief valve opens at 30 lb. per sq. in. discharging to atmosphere through a vent pipe in the top cowling. On cooling, when the pressure falls below $2\frac{1}{2}$ lb. per sq. in., the valve opens and air is admitted until equilibrium is restored. For further details of the thermostatic relief valve refer to A.P.1464 C.

INTERCOOLING SYSTEM

19. The intercooling system is completely independent of the engine cooling system, having its own coolant circulating pump and radiator. The radiator is mounted in the forward section of the engine lower cowling and has a fixed outlet duct. A pressure and vacuum relief valve, set to open at 30 lb. per sq. in. and 3 in. Hg. respectively, is vented to atmosphere through the engine top cowling.

AIR-INTAKE CONTROL (*fig. 13*)

Air filter

20. The air-intake filters have semi-automatic control, and whatever the position of the control switches when the undercarriage is locked down, the filters are automatically brought to FILTER IN. With the undercarriage locked up, FILTER IN or OUT can be selected by pressing the appropriate switch. Filter shutter operation is by double-acting pneumatic rams, to which compressed air is directed by solenoid-controlled valves. The filter unit is fitted in the engine bottom cowling complete with the pneumatic ram and solenoid valve immediately above it.

Hot and cold air supply

21. Hot and cold air regulation is effected similarly to that for the air-intake filter. There is electrical interconnection between the two systems so that, when HOT AIR is selected, the filter flap is lowered (unless the filter is already in use) and two flaps, fitted inboard of the filter units, open to permit heated, unfiltered air from inside the engine cowlings to pass into the air-intake. When the selector switch is set to COLD AIR, the hot air flaps close and the filter shutter returns to the unfiltered position, or remains down to give filtered air, according to the position of the undercarriage and the filter switch selection. A coarse mesh wire cover is fitted above the hot air flap openings. Two recording thermometers, fitted aft of the engine control box, indicate the induction charge temperature.

PIPE COUPLINGS

22. Avimo couplings (*fig.* 8) are used throughout the cooling system and on some low pressure joints in the oil cooling system. The remainder of the oil system joints are standard metal couplings or hoses with screwed clips.

ENGINE CONTROLS

23. The arrangement of the engine controls is shown in fig. 11, and the engine control box in fig. 12. The throttle controls are operated from the engine control box through levers, rods, and torque tubes mounted on ball bearings. A cam on each throttle torque tube operates the undercarriage warning horn micro switches. Propellers speed control is similar to that for the throttle except that the connection between the torque tube lever and the governor is by Teleflex cable. Propeller feathering is effected by push-switches through double-acting relays ; a feathering oil pressure-operated switch cuts out the feathering pump on completion of the feathering sequence. The slow running cut-outs are operated by cables running

through conduits ; springs return the cut-out valves to the running position when the control is released.

Superchargers

24. With the cockpit switch set at AUTO, the superchargers will change to full supercharge at 20,250 ft. during ascent, being automatically operated by an aneroid, switch and electro-pneumatic rams. While descending, the supercharger will change back to moderate supercharge at 18,750 ft. If required, moderate supercharging may be used at altitudes above 20,250 ft. by setting the cockpit switch to MOD.

FIRE EXTINGUISHING SYSTEM (*fig. 14*)

25. A system of fire warning and extinguishing is incorporated for each engine. Six switches fitted on each engine mounting and firewall are connected in parallel with a red warning lamp in each propeller feathering push-switch. When any flame switch functions, warning is given by a steady light and at the same time the system is connected electrically, ready for operation by the feathering push-switch. Pressing this switch will feather the propeller and discharge one bottle immediately into the induction manifold ; after a delay of 10 seconds, the second bottle is discharged through perforated pipes fixed round the engine. A separate push switch for each engine (on junction box B) when pressed, causes simultaneous discharge of both bottles. An impact switch is also included in the system and when this switch operates all bottles are automatically discharged.

8054 59667 12/53 450 C.B.&S.Ltd. Gp.30

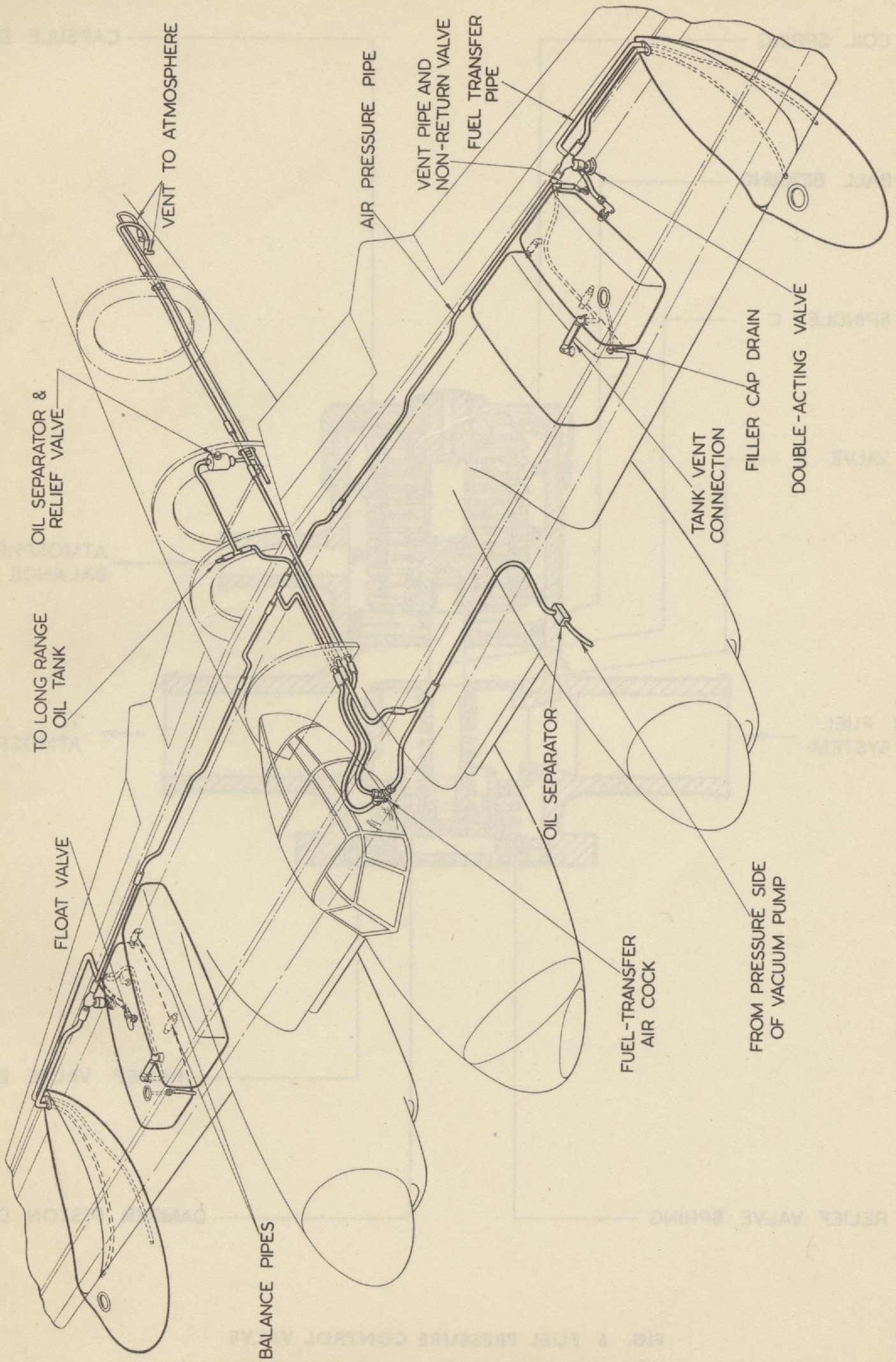

FIG. 5 FUEL TRANSFER SYSTEM

G1814 M26069 9/49 550 C.B.& S.LTD. GP.55.

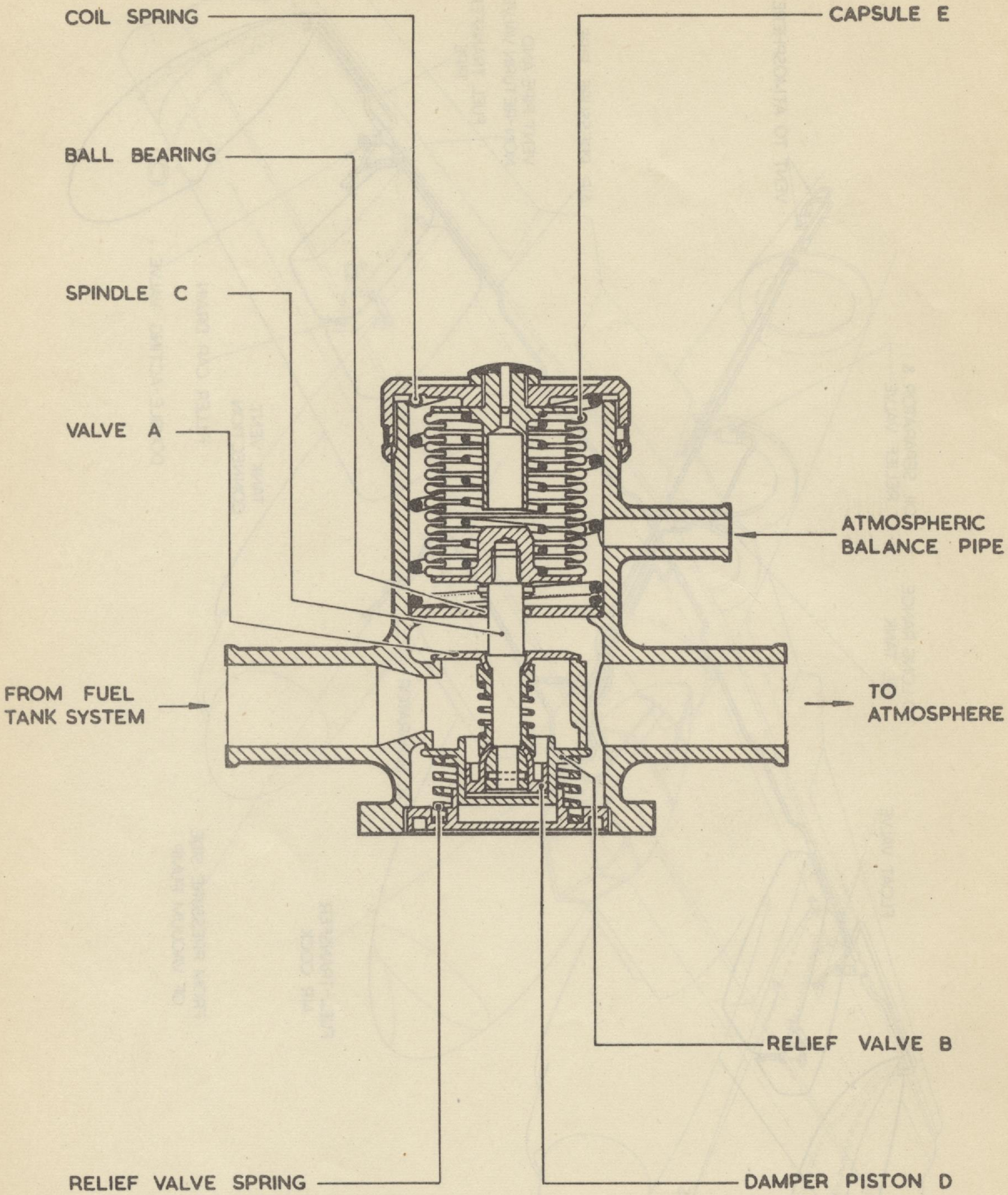

FIG. 6 FUEL PRESSURE CONTROL VALVE

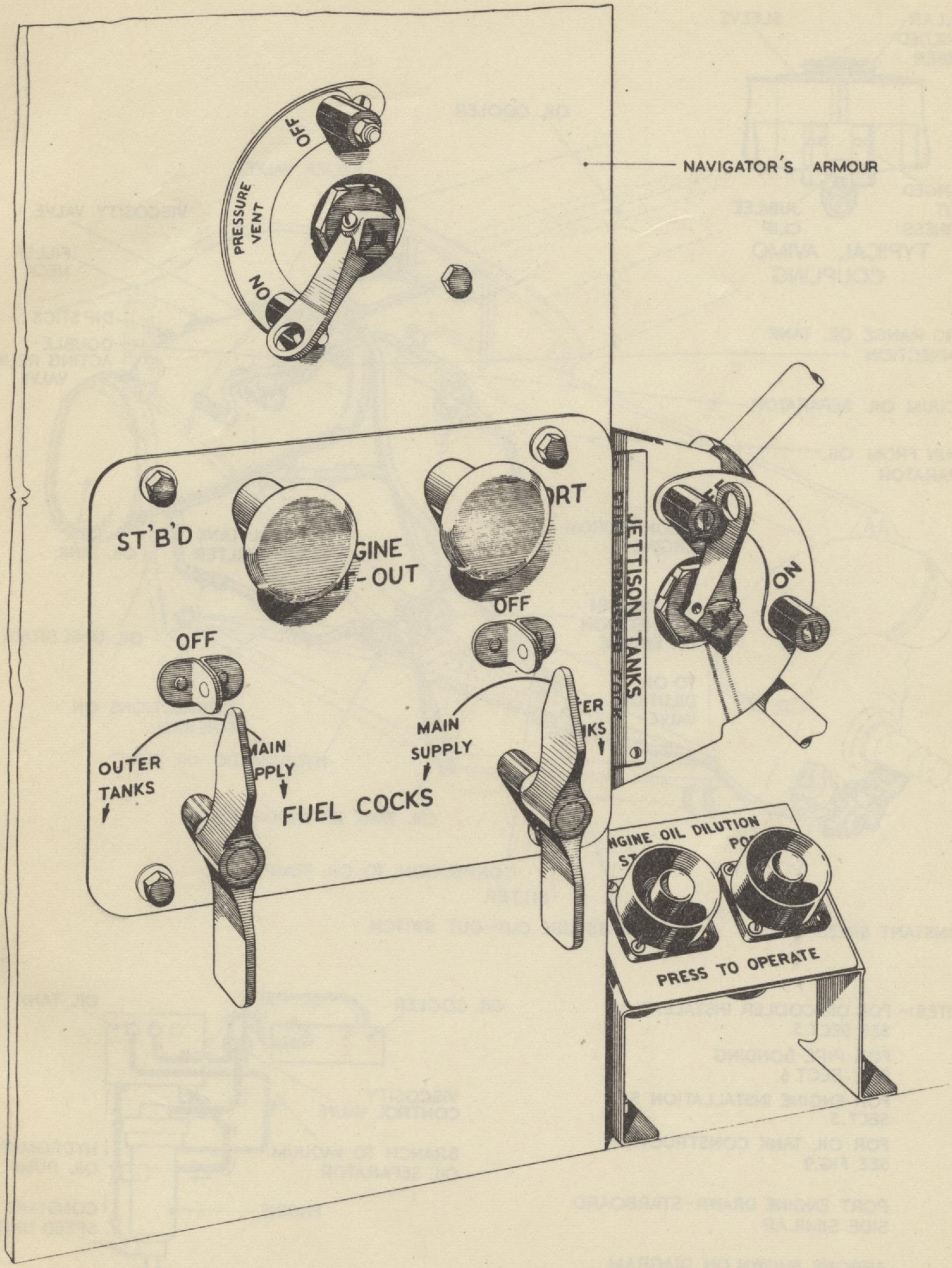

FIG. 7 FUEL CONTROL PANEL

G1814 M26069 9/49 550 C.B.& S.LTD. GP.55.

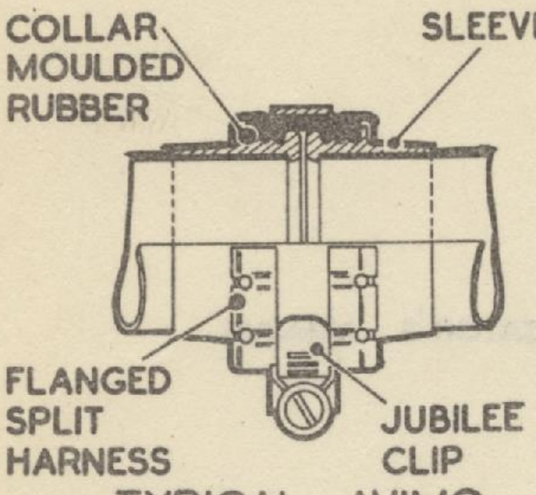

TYPICAL AVIMO COUPLING

NOTES:- FOR OIL COOLER INSTALLATION SEE SECT. 5

FOR PIPE BONDING SEE SECT. 6.

FOR ENGINE INSTALLATION SEE SECT. 5

FOR OIL TANK CONSTRUCTION SEE FIG. 9

PORT ENGINE DRAWN - STARBOARD SIDE SIMILAR

ARROWS SHOWN ON DIAGRAM INDICATE DIRECTION OF FLOW

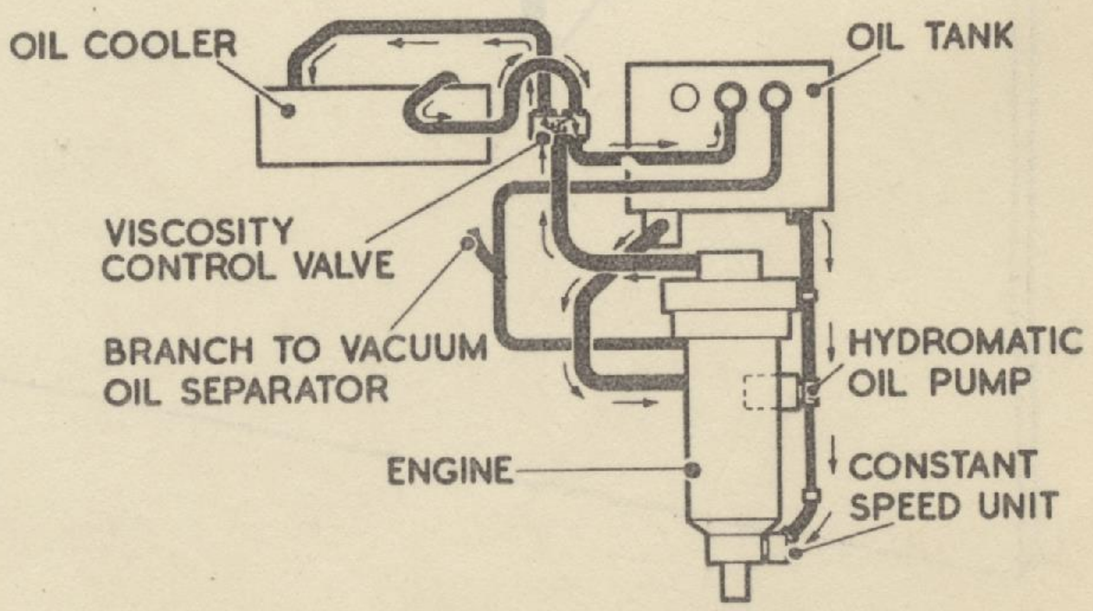

DIAGRAM OF ENGINE OIL SYSTEM

FIG. 8 OIL SYSTEM

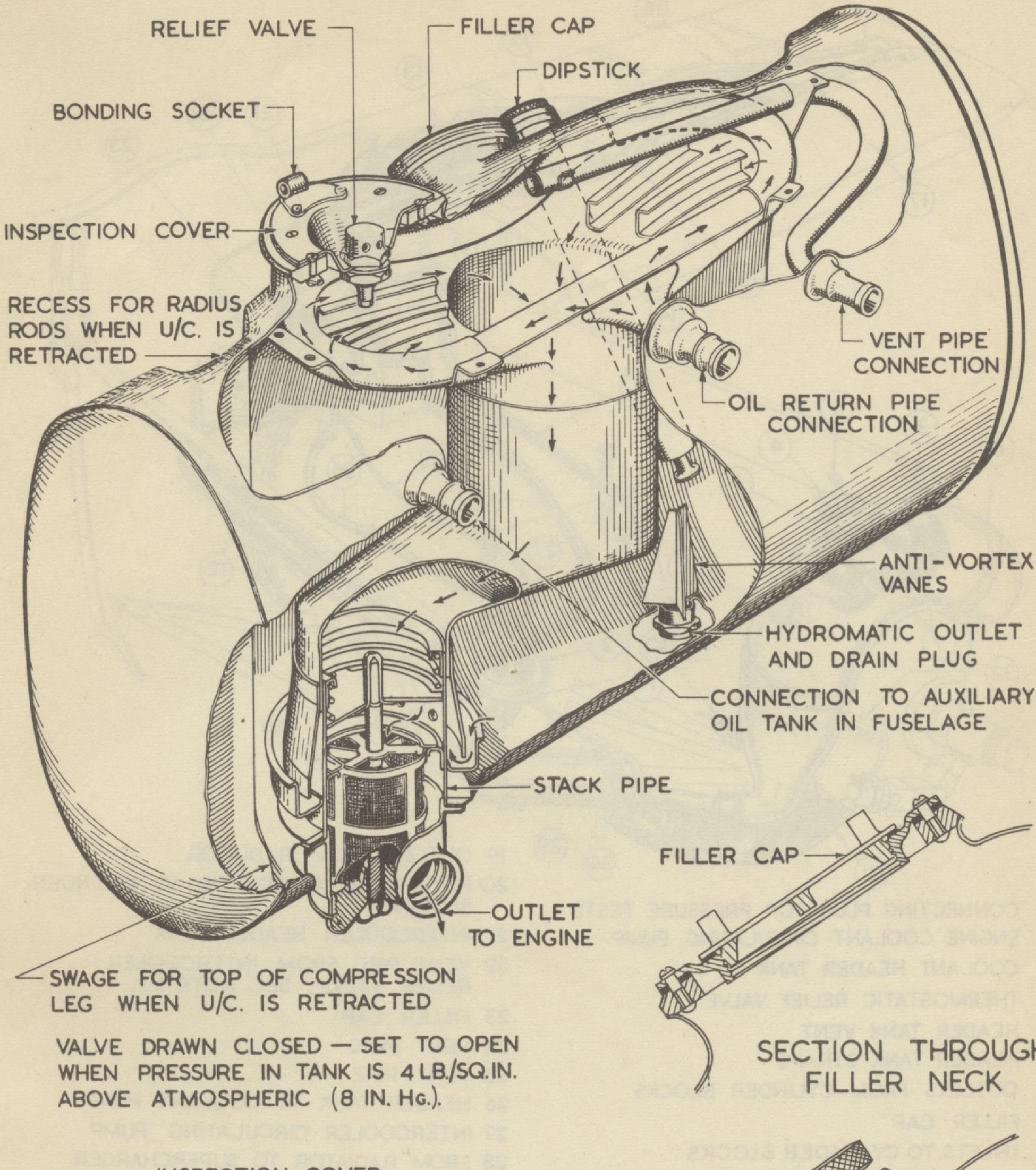

SECTION THROUGH FILLER NECK

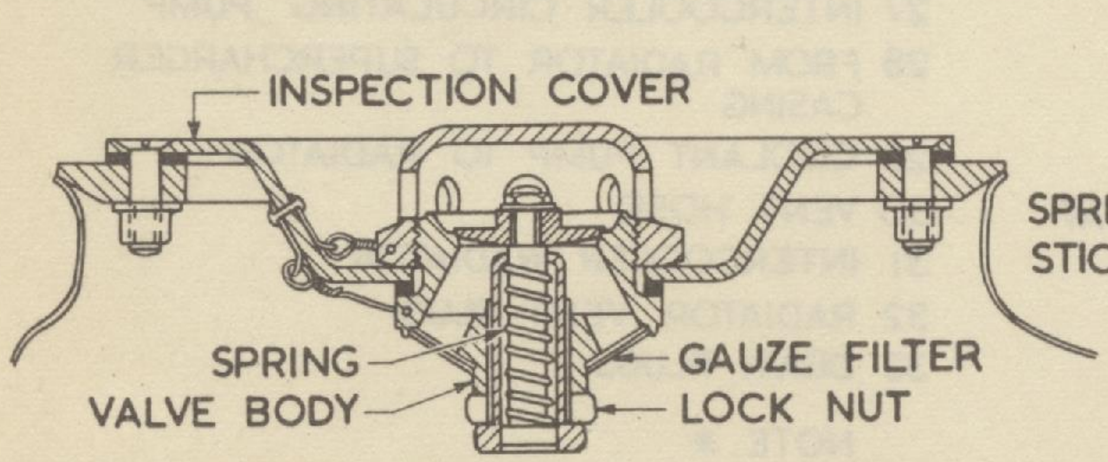

SECTION THROUGH INSPECTION COVER SHOWING RELIEF VALVE

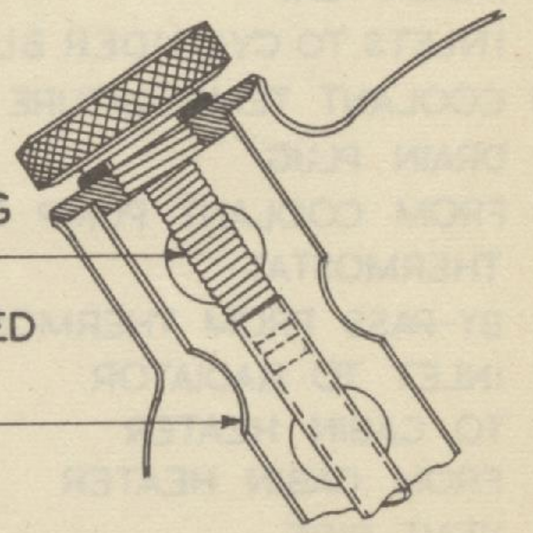

SECTION THROUGH DIPSTICK

FIG. 9 MAIN OIL TANK

G1814 M26069 9/49 550 C.B.& S.LTD. GP55.

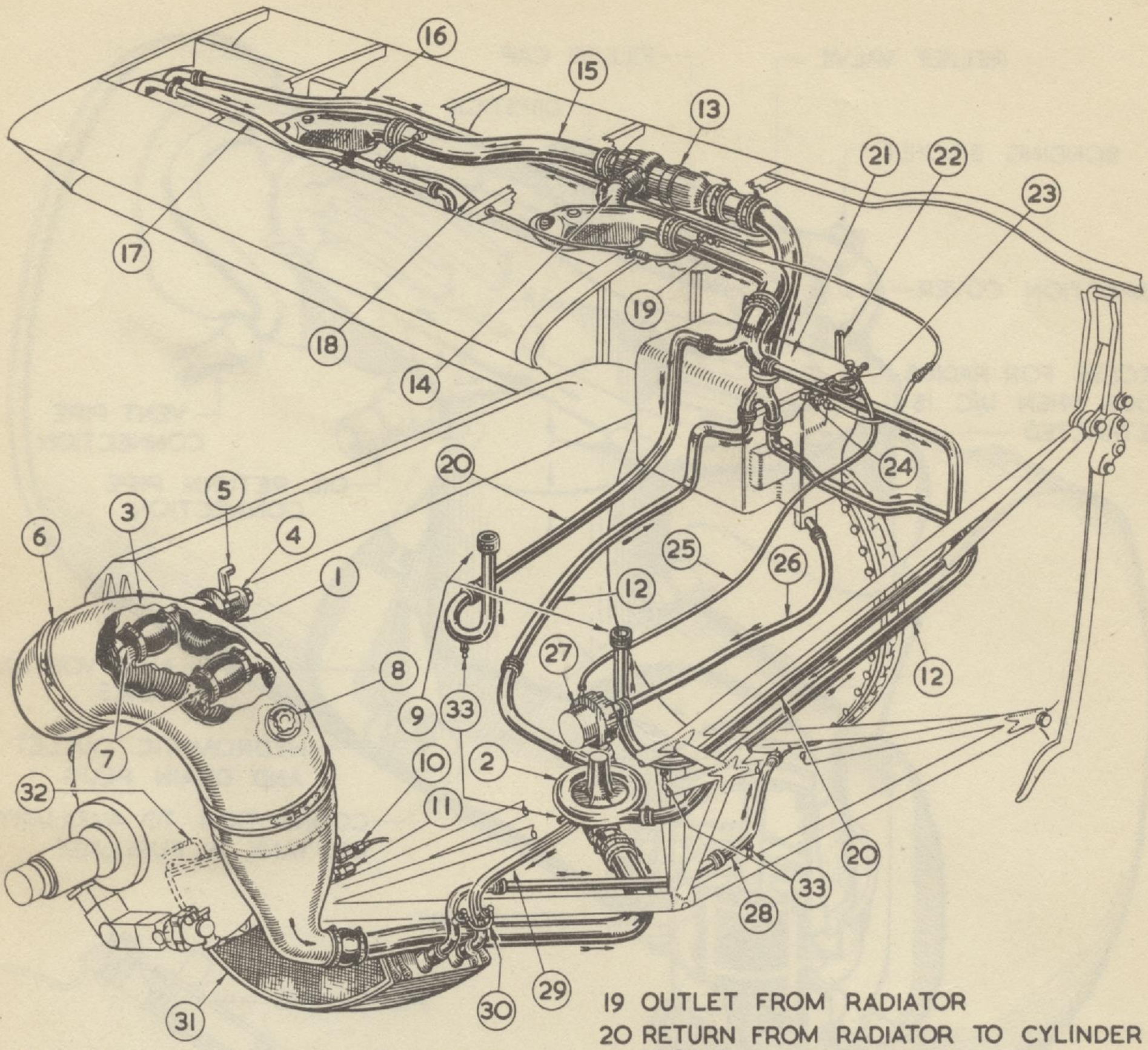

1 CONNECTING PLUG FOR PRESSURE TESTS
2 ENGINE COOLANT CIRCULATING PUMP
3 COOLANT HEADER TANK
4 THERMOSTATIC RELIEF VALVE
5 HEADER TANK VENT
6 HEADER TANK STRAPS
7 OUTLETS FROM CYLINDER BLOCKS
8 FILLER CAP
9 INLETS TO CYLINDER BLOCKS
10 COOLANT TEMPERATURE BULB
11 DRAIN PLUG
12 FROM COOLANT PUMP TO THERMOSTAT
13 THERMOSTAT
14 BY-PASS FROM THERMOSTAT
15 INLET TO RADIATOR
16 TO CABIN HEATER
17 FROM CABIN HEATER
18 VENT PIPE
19 OUTLET FROM RADIATOR
20 RETURN FROM RADIATOR TO CYLINDER BLOCKS
21 INTERCOOLER HEADER TANK
22 VENT PIPE FROM INTERCOOLER RELIEF VALVE. SEE NOTE *
23 FILLER CAP
24 VENT PLUG
25 VENT PIPE
26 HEADER TANK TO COOLANT PUMP
27 INTERCOOLER CIRCULATING PUMP
28 FROM RADIATOR TO SUPERCHARGER CASING
29 COOLANT PUMP TO RADIATOR
30 VENT HOSE
31 INTERCOOLER RADIATOR
32 RADIATOR VENT PLUG
33 DRAIN PLUGS

NOTE. *
INTERCOOLER TEST CONNECTION MADE AT HOSE BELOW RELIEF VALVE

FIG. 10 ENGINE COOLING SYSTEM

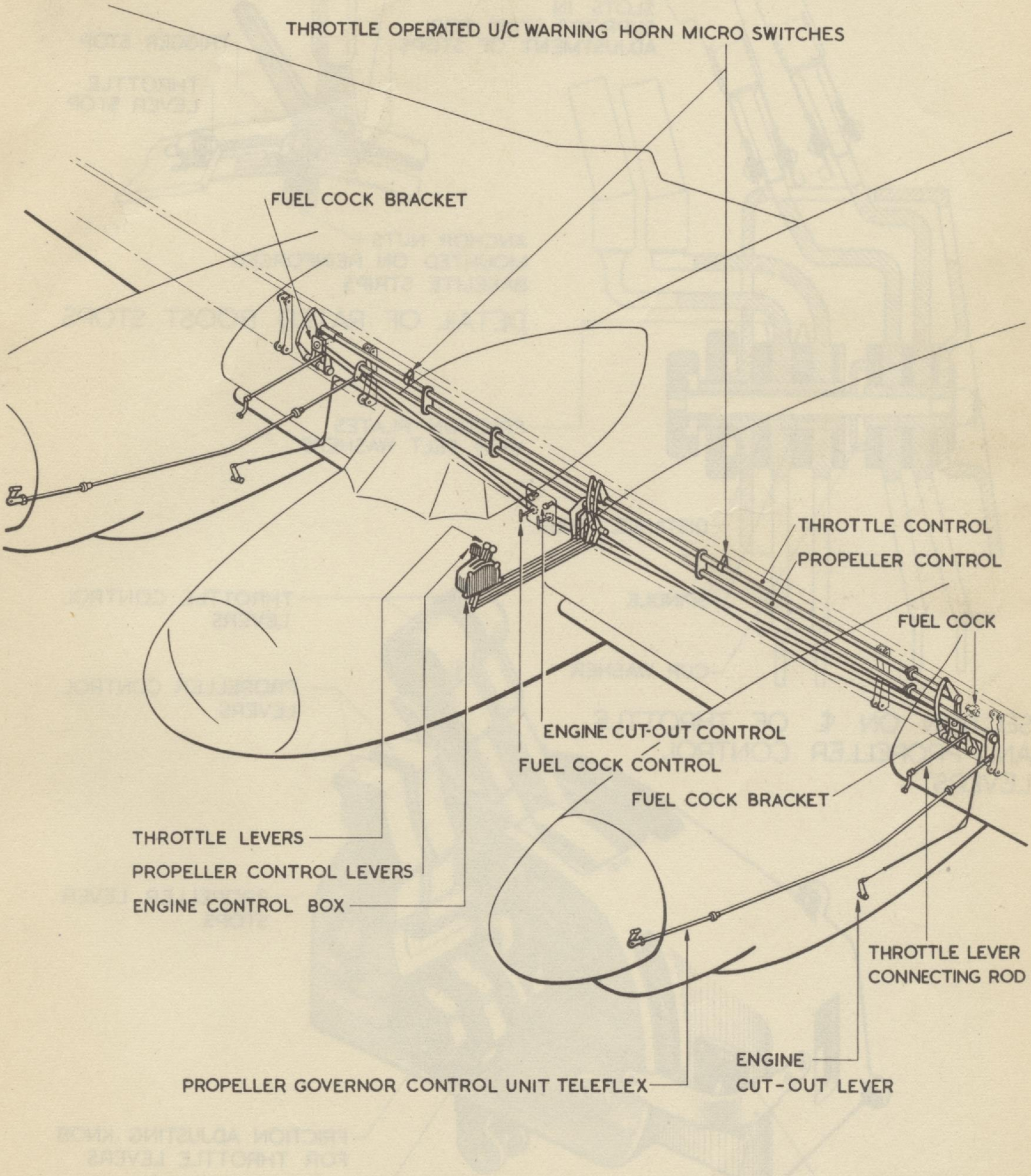

FIG. 11 ENGINE CONTROLS

G1814 M26069 9/49 550 C.B.& S.LTD. GP.55.

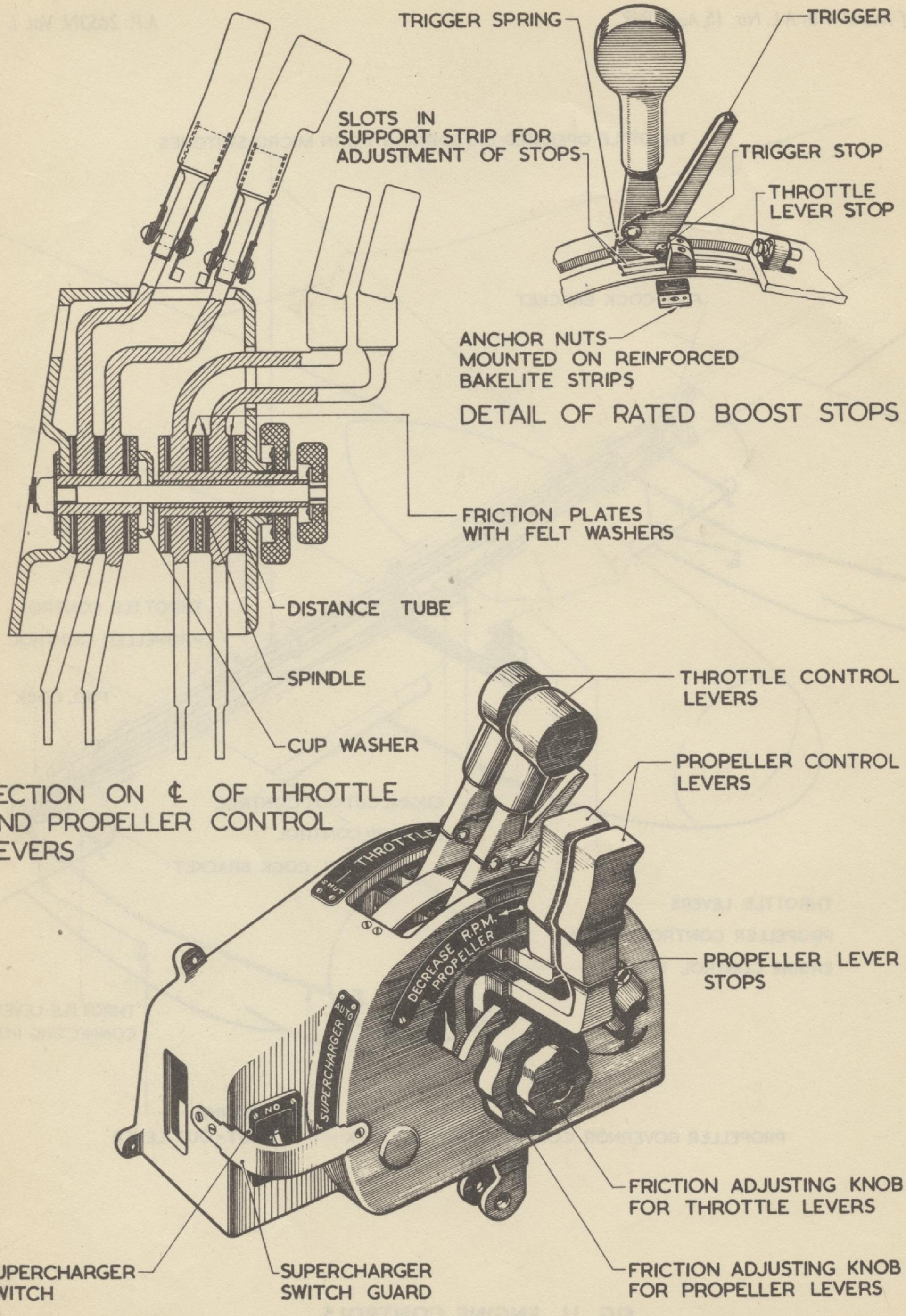

FIG. 12 ENGINE CONTROL BOX

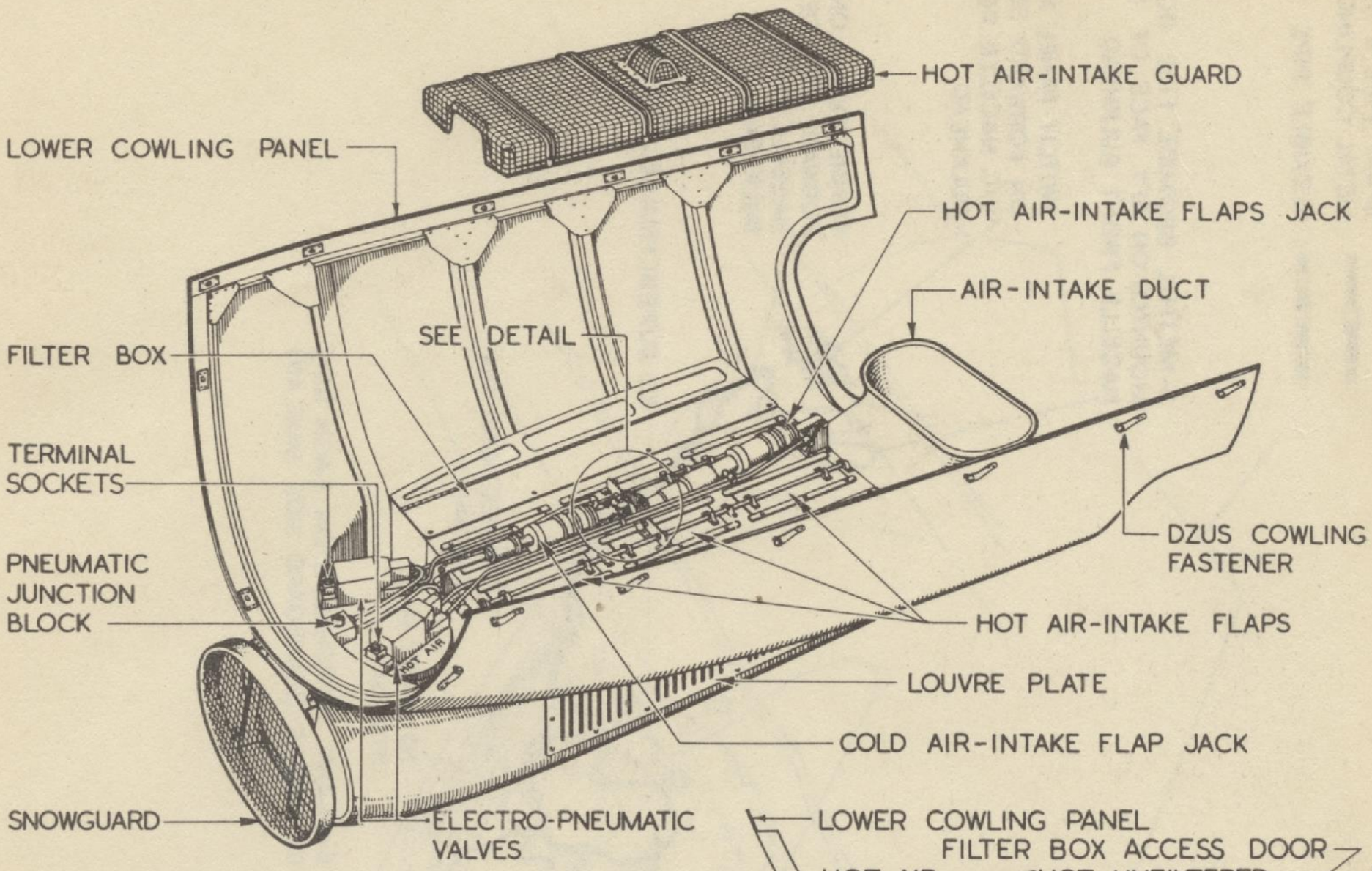

VIEW OF LOWER COWLING PANEL WITH HOT AIR-INTAKE GUARD SHOWN REMOVED

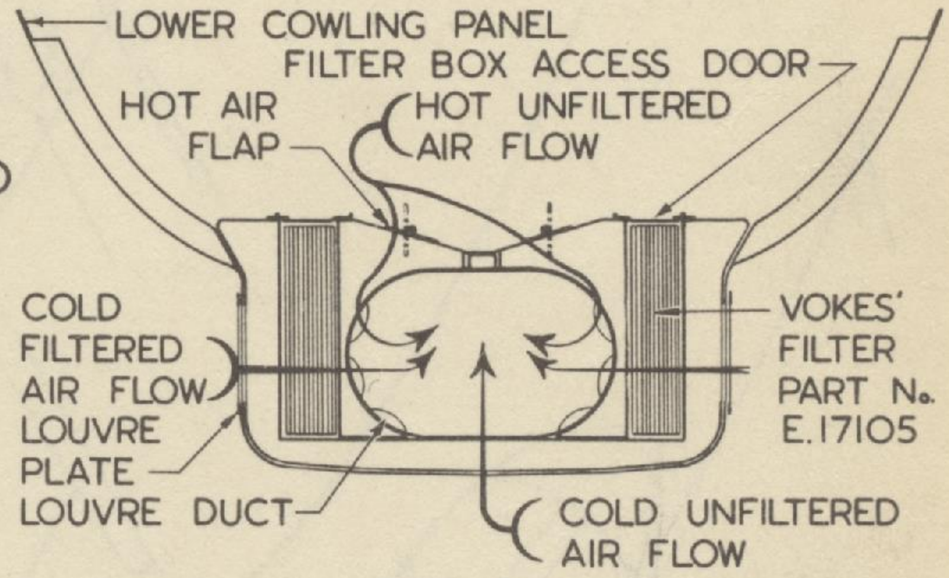

SECTION THROUGH AIR INTAKE

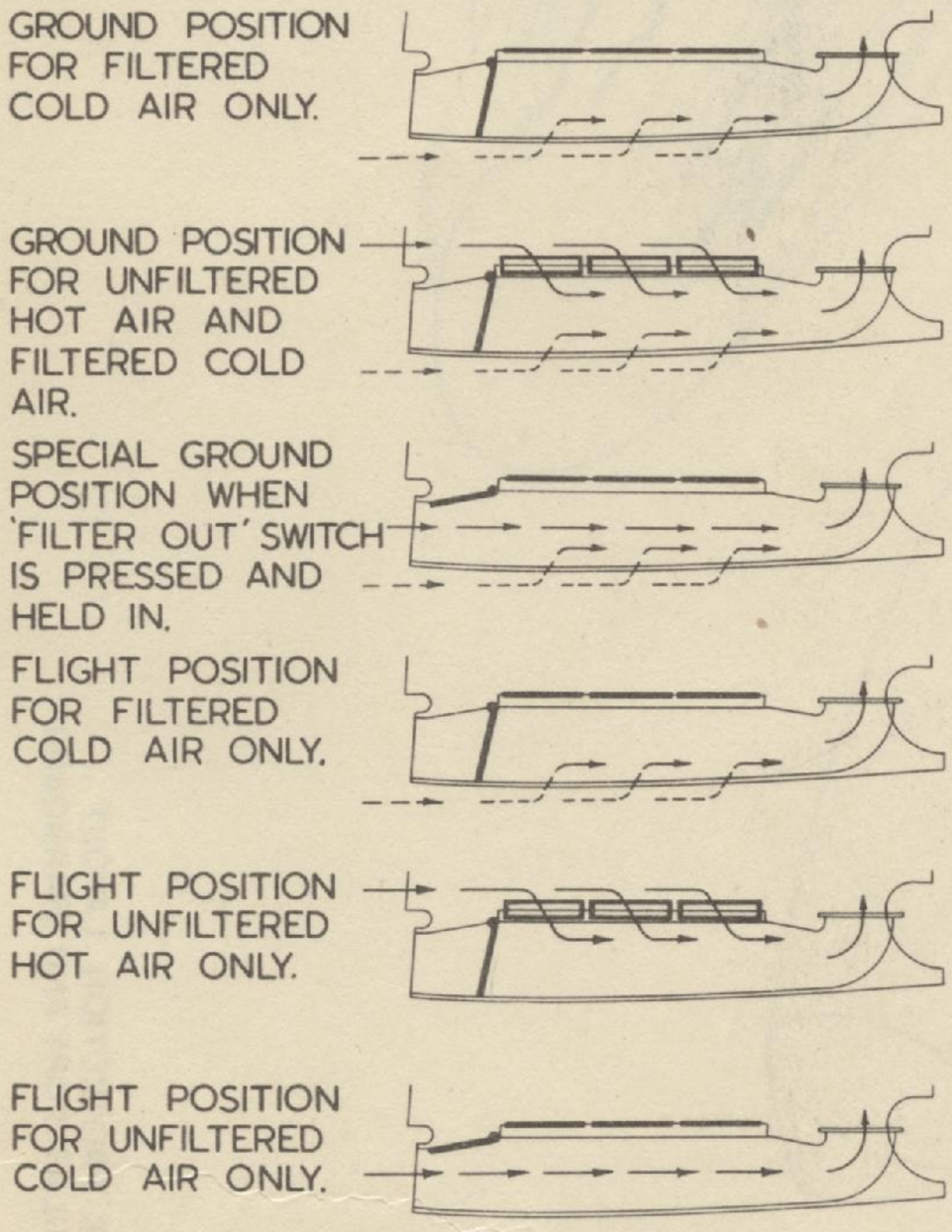

ALTERNATIVE AIR FLOWS ON GROUND AND IN FLIGHT

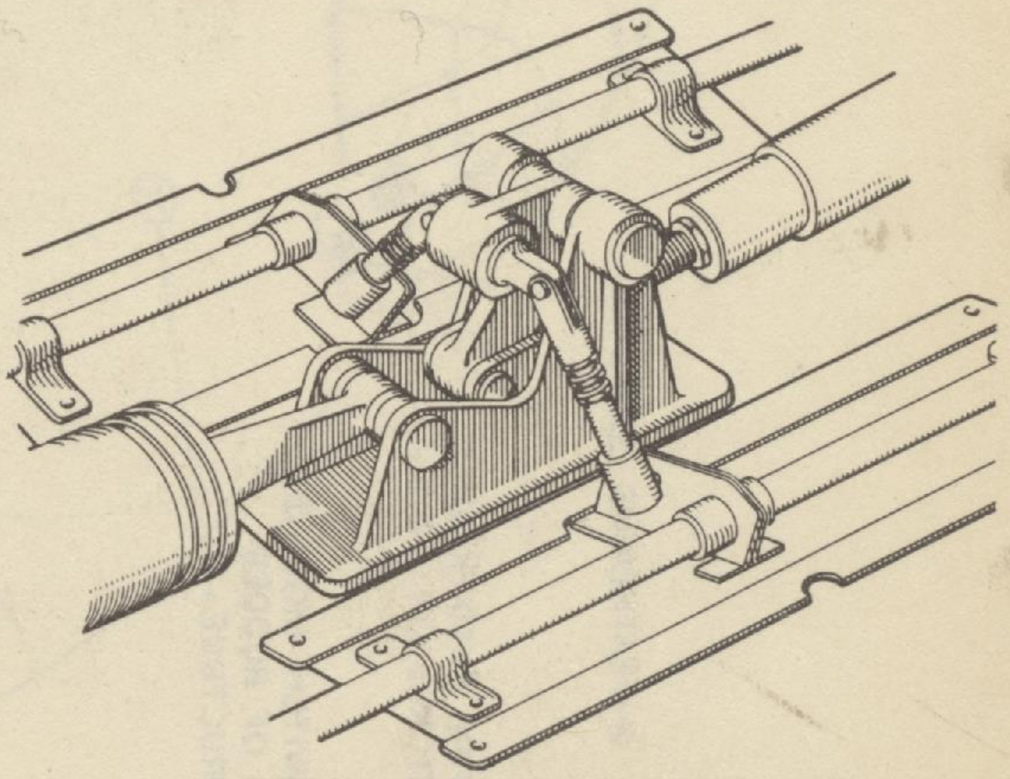

DETAIL SHOWING HOT AIR-INTAKE FLAPS MECHANISM

FIG. 13 AIR INTAKE

G1814 M26069 9/49 550 C.B.& S.LTD. GP.55.

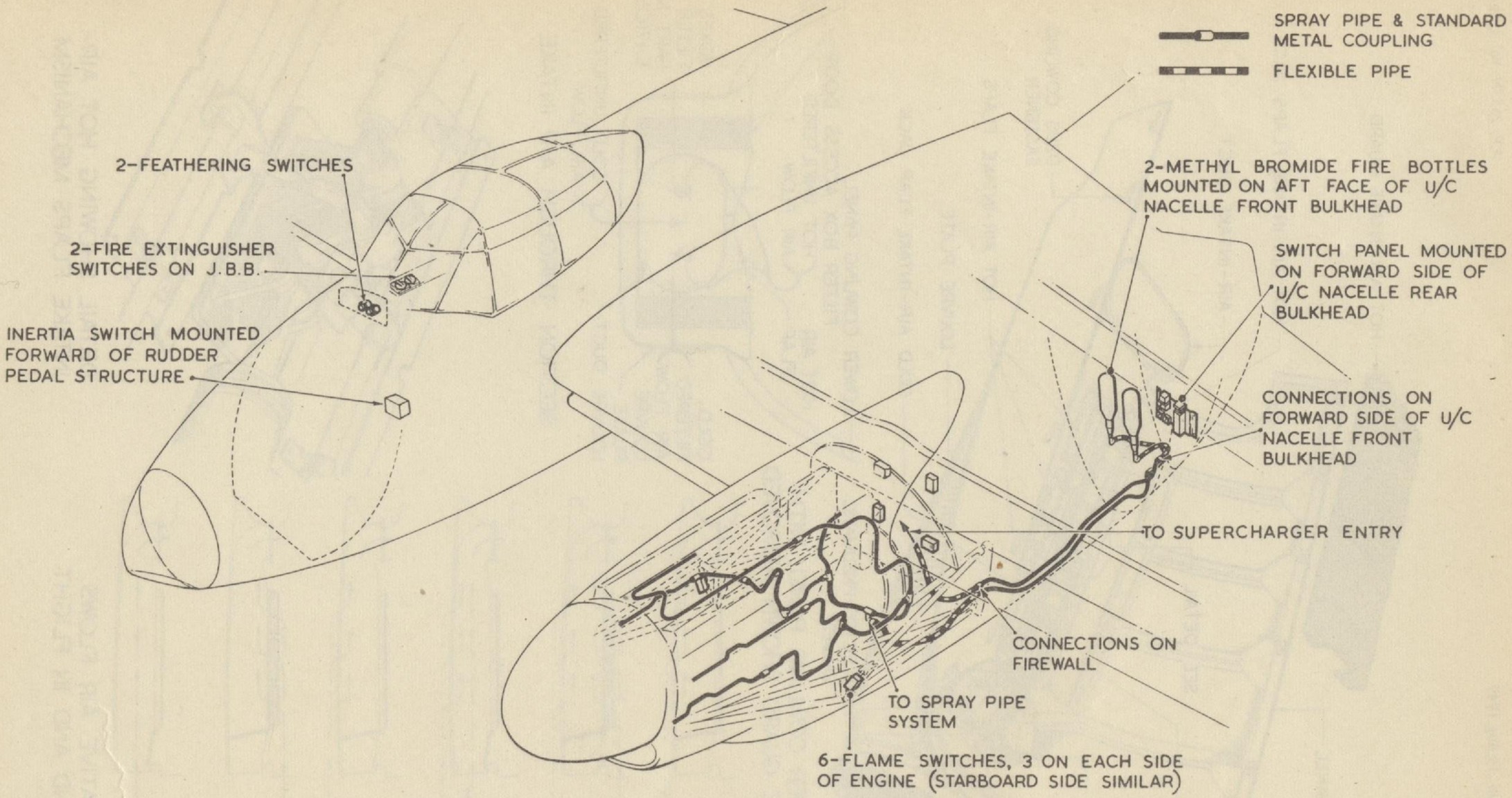

FIG. 14 FIRE EXTINGUISHING SYSTEM

NOTE:- FIRE PROTECTION LAYOUT SIMILAR PORT AND STARBOARD

This leaf issued in reprint
December, 1947

SECTION

9

HYDRAULIC AND PNEUMATIC SYSTEMS

123 M/C M45854 2/48 200 C.B.& S.Ltd. Gp.30

Section 9

This section supersedes that issued with A.L. No. 18

HYDRAULIC AND PNEUMATIC SYSTEMS

LIST OF CONTENTS

HYDRAULIC SYSTEM

	Para.
Introduction	1
Supply circuit	2
Reservoir	4
Alighting gear circuit	
Normal operation	5
Emergency operation	7
Flaps circuit	8
Bomb doors circuit	9

PNEUMATIC SYSTEM

	Para.
Introduction	10
Air compressor	11
Oil-and-water trap	12
Pressure regulator	13
Air container	14
Air filter	15
Pressure-reducing valve	16
Pressure-maintaining valve	17
Brake differential unit	18
Supercharger control ram	19
Air-intake and filter control jacks	20

LIST OF ILLUSTRATIONS

	Fig.
Hydraulic system diagram	1
Hydraulic sytem diagram (Mod. 1443)	2
Pneumatic system diagram	3

HYDRAULIC SYSTEM

Introduction

1. There are two hydraulic systems in use. The original system is of the " low pressure " type and the new system (Mod. 1443) is an accumulator system. Both systems operate the alighting gear, flaps and bomb doors. Circuit diagrams are given in fig. 1 and 2, pipe line illustrations being shown in Sect. 4, Chap. 3. The systems are described in the following paragraphs, but for detailed descriptions of the individual components reference should be made to A.P. 1803 Series, Vol. 1.

SUPPLY CIRCUIT

2. On aircraft pre-Mod. 1443 power is normally supplied by two engine-driven pumps which deliver fluid through non-return valves to the main selector valves ; the non-return valves prevent the fluid supplied by one pump from entering the delivery line of the other. A relief valve connected to the selector valve assembly safeguards the system and is common to both the engine-driven pumps and the hand pump. The selector valve assembly has three sections, which control the alighting gear, flaps and bomb door circuits. When the selector valves are set at neutral, the fluid from the pumps circulates at low pressure and is directed to the reservoir ; a relief valve safeguards the system. When the engine-driven pumps are not working, fluid can be supplied to the selector valve by the hand pump ; a non-return valve in the selector valve prevents fluid under pressure from the engine-driven pumps entering the hand pump delivery pipeline. The hand pump can also be used to lower the main wheels through separate emergency pipelines, normal or emergency operation of the hand pump being obtained by an appropriate setting of the EMERGENCY selector valve. A buffer unit is fitted in the undercarriage UP line to smooth out pulsations in the system which cause lock bounce and consequent flickering of the undercarriage warning lights.

3. Power is supplied by two engine-driven pumps on aircraft incorporating Mod. 1443, but the fluid is delivered through an automatic cut-out valve to four accummulators, mounted on the right-hand side of the rear fuselage, in addition to the main selector valve. This cut-out valve cuts in at 1,300 lb. per sq. in. and cuts out at 1,650 + 50 lb. per sq. in. Non-return valves are utilised

to isolate the delivery lines. The selector valve has three sections which control the bomb door, flap and alighting gear circuits respectively. The flap selector lever is provided with a neutral position so that the flaps may be set at any desired angle within the full range of travel ; a neutral position is not provided for the alighting gear and bomb door selector levers. When the engine driven pumps are not operating, fluid may be supplied to the selector valve from the hand pump which is also used for emergency operation. When operating the services by means of the hand pump, the emergency selector must be moved down to the emergency position for alighting gear operation, but should be retained in its neutral position (up) for operation of the flaps and bomb doors. The required selection must be made on the main selector valve before operating the hand pump.

Note . . .

A manually-operated release valve is incorporated in the system to release hydraulic pressure from the accumulators when the aircraft is parked out or is likely to be left unattended for some time. This valve is mounted below the floor adjacent to the main entrance door. A quick-release safety pin is also fitted for locking the alighting gear selector lever in the DOWN position.

RESERVOIR

4. The reservoir is partitioned into two unequal compartments, the upper section of the diaphragm being perforated. The engine-driven pumps obtain their supply of fluid from a point about half-way up the larger compartment, and the emergency supply for the hand pump is taken from the bottom of this compartment ; the normal supply for the hand pump is taken from the bottom of the smaller compartment. The fluid returning from the system enters the smaller compartment and, when the level is high enough, overflows through the perforations into the larger compartment, leaving a reserve of fluid in the smaller compartment for normal operation of the hand pump. Another reserve in the larger compartment, below the level of the engine-driven pumps suction pipe, is for use of the emergency hand pump.

ALIGHTING GEAR CIRCUIT

Normal operation

5. The alighting gear circuit (pre Mod. 1443) is controlled by the central section of the selector unit which has UP, DOWN and neutral positions. The lever automatically returns to neutral, under fluid pressure, after the selected operation is completed. A flow control valve, consisting of lock valves incorporating relief valves, is installed in the pipelines supplying the tail wheel jack, to lock the tail wheel in the up or down position; a mechanical lock is also used in the "down" position. The main wheel units are locked up by mechanically operated latches which are unlocked by the initial movement of the jacks during the lowering operation. When the rams have been fully extended, spring-loaded plungers lock them in the down position, the plungers being withdrawn hydraulically to retract the rams.

6. On aircraft incorporating Mod. 1443 the alighting gear circuit is also controlled by the centre section of the main selector valve which has UP and DOWN positions. The main wheel units are locked up by mechanically-operated latches which are unlocked by the initial movement of the jacks during the lowering operation. When the rams have been fully extended, spring-loaded plungers lock them in the down position, the plungers being withdrawn hydraulically to retract the rams.

Emergency operation

7. If the normal circuit fails (pre Mod. 1443), the main wheels only can be lowered by pressing down the EMERGENCY selector valve and operating the hand pump, which then delivers fluid direct to the main wheel jacks through the emergency pipelines. Clack valves, incorporated in the hydraulic junction block is fitted to the jacks, are operated by the fluid to put the emergency pipe lines into communication with the jacks and seal the normal lines. It is important that, while the emergency circuit is being operated, the undercarriage selector must *not be at UP* but may be at DOWN or neutral, otherwise the fluid in the ram end of the jacks cannot escape. On aircraft incorporating Mod. 1443, a separate emergency pipeline to the main wheel jacks is not provided, the pipeline extending to the main selector valve only. For emergency lowering of the alighting gear—both main and tail wheel units—with this system, the emergency selector must be set to EMERGENCY and the main selector lever placed in the DOWN position before operating the hand pump.

FLAPS CIRCUIT

8. The flaps circuit is controlled by the right-hand section of the main selector

valve unit, which has three settings, UP, neutral and DOWN. When the rams have reached the end of their stroke, fluid pressure increases to the throw-out pressure and the selector valve lever automatically returns to the neutral position. To set the flaps at any intermediate position the lever is manually returned to the neutral position before the rams have reached the end of their stroke. A flow control valve locks the flaps in the position at which they have been set. On aircraft incorporating Mod. 1443, a flow control valve is not utilised and the selector lever does not return automatically to neutral at the end of the jack ram travel.

BOMB DOORS CIRCUIT

9. The bomb doors circuit is controlled by the left-hand section of the main selector valve unit. The selector lever quadrant settings, and the lever throw-out at the completion of the selected operation, are similar to the other two circuits. A flow control valve is fitted in the circuit to retain the bomb doors in the open or closed position after the selector lever has returned to the neutral setting. On aircraft incorporating Mod. 1443, the main selector valve has UP and DOWN settings only, a flow control valve is not fitted and the selector lever does not throw-out on completion of the selected operation.

PNEUMATIC SYSTEM

Introduction

10. The wheel brakes, supercharger control, air-intake heating and filter shutter controls are pneumatically operated. A diagram of the system is shcwn in fig. 2 and the layout of the system in the aircraft is illustrated in Sect. 4, Chap. 3. The following paragraphs deal with the features peculiar to the aircraft, many of the components being described fully in the appropriate Air Publications listed at the beginning of this handbook.

Air compressor

11. The air compressor is mounted vertically on the rear end of the right-hand cylinder block of the port engine and is accessible when the engine top cowling panel is removed. A deflector round the compressor cylinder is connected to a cooling duct and a quickly detachable, fabric type air filter is fitted over the cylinder head. The air, supplied at a maximum pressure of 450 lb. per sq. in. by the compressor, is stored in a cylinder clamped on a mounting in rear of bulkhead No. 4, above the pneumatic panel. A relief, set to operate at 600 lb. per sq. in., is fitted in the pipeline between the compressor and the pressure regulator. The cylinder can be charged on the ground by a portable compressor or an air bottle, a connection for this purpose being fitted on the pneumatic panel.

Oil-and-water trap

12. The oil-and-water trap, in the delivery line, is mounted on the pneumatic panel and separates any fluids present from the air. At the base of the trap is a spring-loaded drain valve which can be opened by a knurled wheel, the fluids being blown out through the spindle. The trap may be drained while the port engine is running. After draining, release the knurled wheel and ensure that the valve is screwed tightly down on to its seat.

Pressure regulator

13. At the pneumatic panel, the compressor outlet pipe is connected to the pressure regulator which is fitted on the inlet side of the storage cylinder. The output of the compressor is controlled by the regulator, which by-passes the delivery to atmosphere when a pressure of 450 lb. per sq. in. has been reached in the cylinder. A non-return valve in the outlet side of the regulator seals the storage air from the compressor when the port engine is stationary.

Air container

14. This container, a cylindrical shell of sheet metal with hemispherical ends and welded seams, is clamped to the fuselage above the pneumatic panel. Integral with the ends are threaded bosses, into which are screwed the pressure regulator and an adapter, for the attachment of the delivery pipe. The inner end of this adapter projects approximately four inches into the cylinder, forming a stack pipe which traps any fluid which may have passed through the oil-and-water trap or condensed in the cylinder. To drain this fluid it will be necessary to remove the cylinder and unscrew the adapter.

Air filter

15. The air filter, which is connected in the system on the outlet side of the storage cylinder, prevents any moisture which may be carried in the air through the oil-and-water trap and through the cylinder from reaching the remainder of the pneumatic system. The filter element is a thick felt pad sandwiched between two perforated metal discs. The inlet pipe is connected to the side of the filter, the outlet pipe to the top cover and a drain plug is fitted in the base.

Pressure-reducing valve

16. The pressure-reducing valve is mounted on the pneumatic panel on the outlet side of the filter. It is a pressure-balanced valve, set to reduce the air pressure to 200 lb. per sq. in. for delivery to the pneumatically operated equipment. A safety blow-off valve is incorporated to safeguard the equipment should the valve fail to limit the pressure to 200 lb. per sq. in.

Pressure-maintaining valve

17. This valve is mounted on the pneumatic panel in the pipeline on the outlet side of the pressure-reducing valve. It is spring-loaded, to ensure that, while the pressure in the pneumatic system exceeds 150 lb. per sq. in., the valve remains open. If the air pressure should drop, due to failure of the compressor or leakage in the system, the valve will close at 150 lb. per sq. in. and isolate all the pneumatically operated equipment from the supply system, except the wheel brakes.

Brake differential unit

18. The brake differential unit is installed on the cockpit floor forward of the rudder pedals. A brake lever on the control column is connected by a cable to the differential unit and controls progressively the air pressure admitted to the brakes up to a pre-set maximum. A connecting-rod from a lever on the forward rudder pedal layshaft is also coupled to the unit, operating the valves to give differential braking when manoeuvring the aircraft on the ground. Adjustment can be made in the unit to set the maximum air pressure, both with the rudder central and when differential movement is used. These pressures are indicated on a triple pressure gauge fitted on the bottom of the instrument panel.

Supercharger control ram

19. This ram is of the single-acting, spring-loaded, electro-pneumatic type, incorporating a solenoid-operated control valve. When the latter is energised (*Sect.* 4, *Chap.* 3) the exhaust valve is closed and, at the same time, the inlet valve is opened admitting air under pressure to the underside of the piston, thus retracting the ram. When the aneroid switch contacts open, the solenoid ceases to be energised, the valve drops, closes the air inlet and opens the exhaust valve, and the spring then extends the ram.

Air-intake and filter control jacks

20. The operation of the hot-air and filter shutters is effected by two double-acting pneumatically-operated rams. Two solenoid energised valves, controlled by cockpit switches, direct the compressed air to the appropriate ends of the rams. The ram end of the forward jack is connected to the filter flap and that of the rear jack to the hot-air flaps. The pneumatic control of these jacks is illustrated in Sect. 8.

EXPLANATORY NOTES AND KEY TO FIG. 1 AND 3

1. Where a number of symbols are enclosed in a dotted frame, the components represented by them are actually built into one unit.

2. Where identical components are in parallel, only one is drawn, and the total number is indicated by the annotation.

3. Jacks are drawn so that the piston-rod moves in the same sense as the part operated, e.g., the main wheel jacks extend to lower the main wheel units.

4. Single arrows on pipelines indicate the direction of the flow, and the double arrows pointing in opposite directions indicate that the flow can occur in either direction. In neither case is the flow continuous. Double arrows pointing in the same direction indicate continuous flow when the engine-driven pumps are operating. In pipe-lines without arrows, flow occurs under abnormal conditions only. Arrows are omitted inside dotted frames for clarity.

7691 67735 1/53 450 C.B.&S.LTD. GP.30

7892 67737 1/53 450 C.B.&S.LTD. GP.55

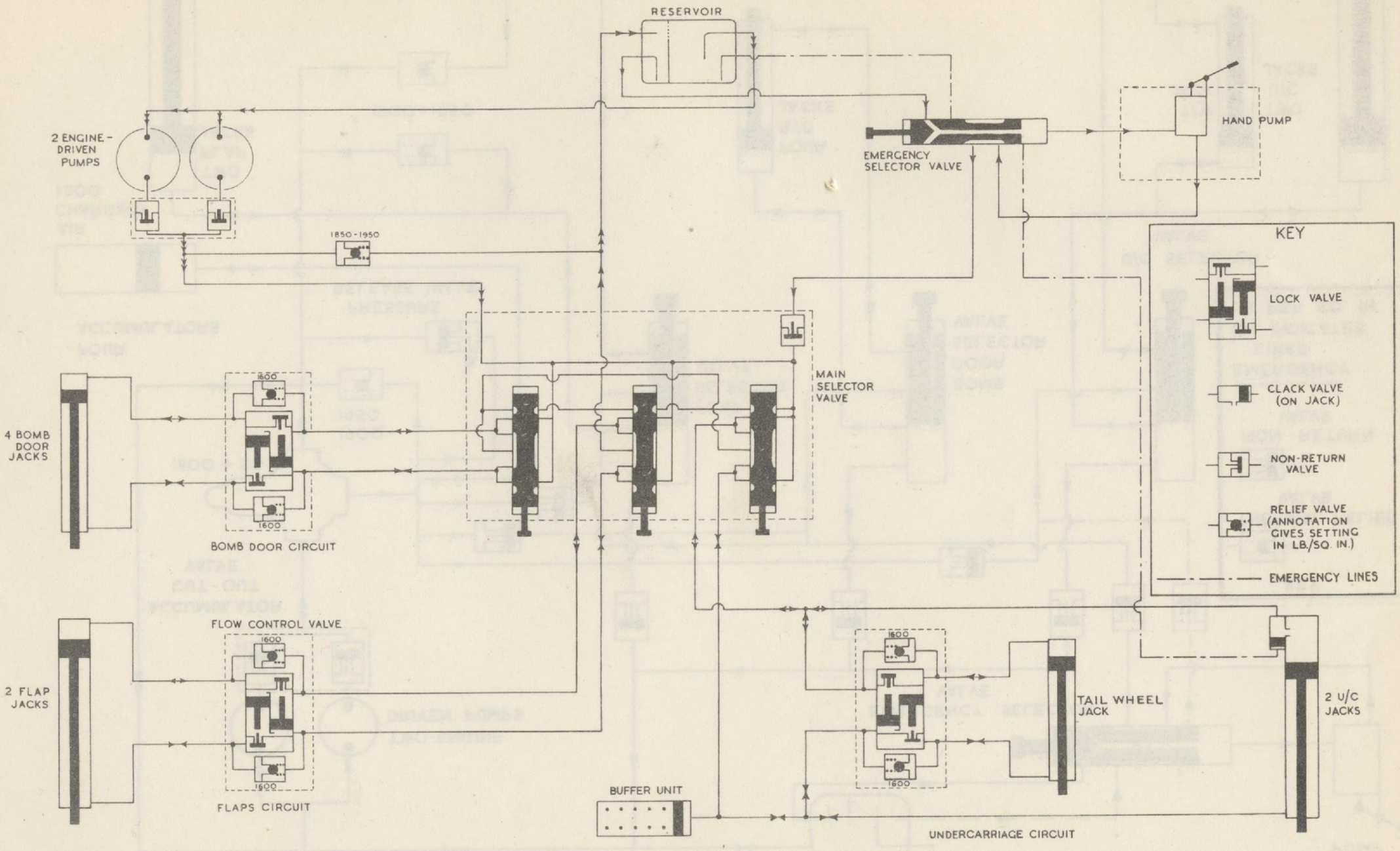

RESTRICTED

FIG. 1. HYDRAULIC SYSTEM DIAGRAM (PRE MOD. 1443)

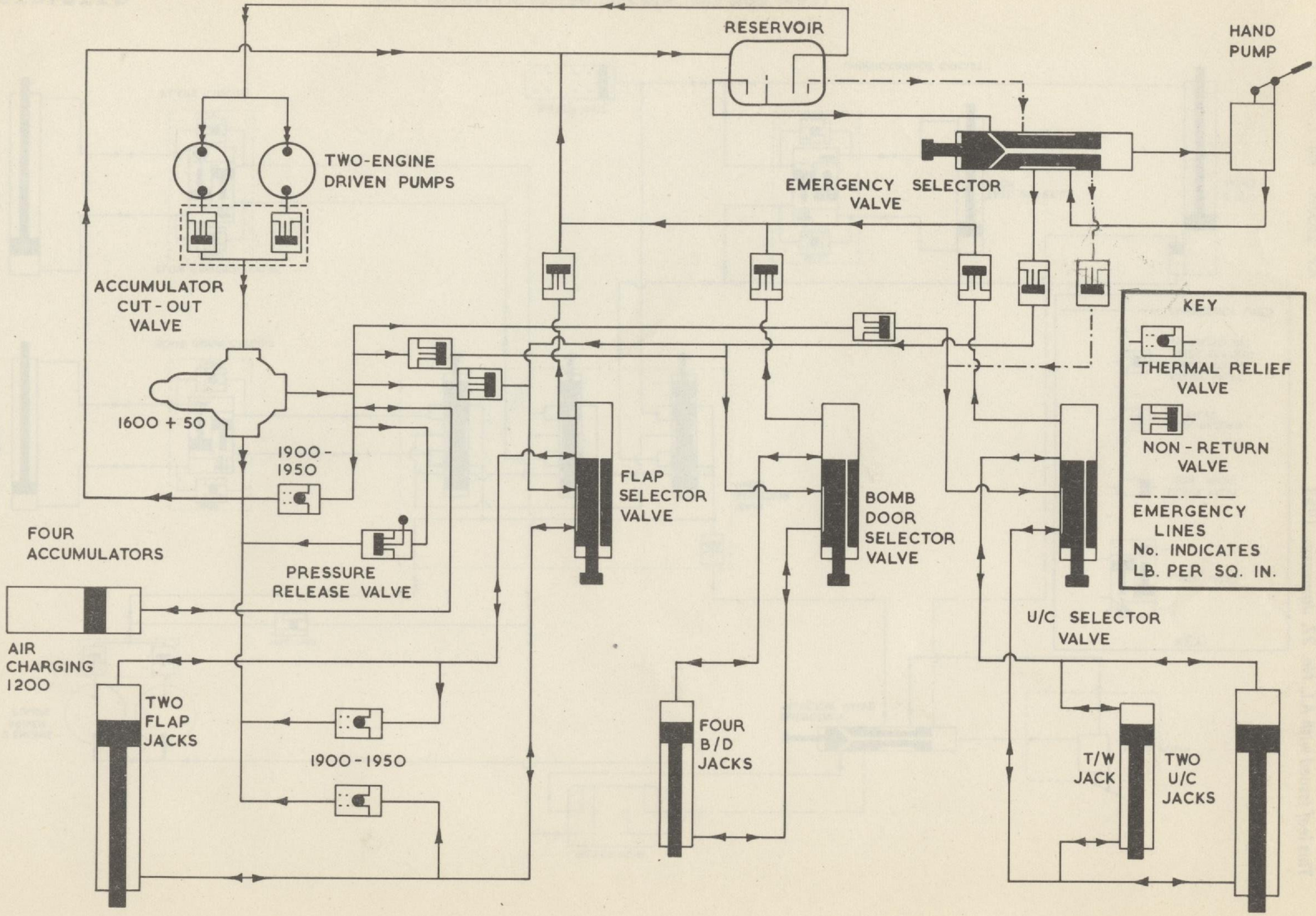

2 HYDRAULIC SYSTEM DIAGRAM (MOD. 1443)

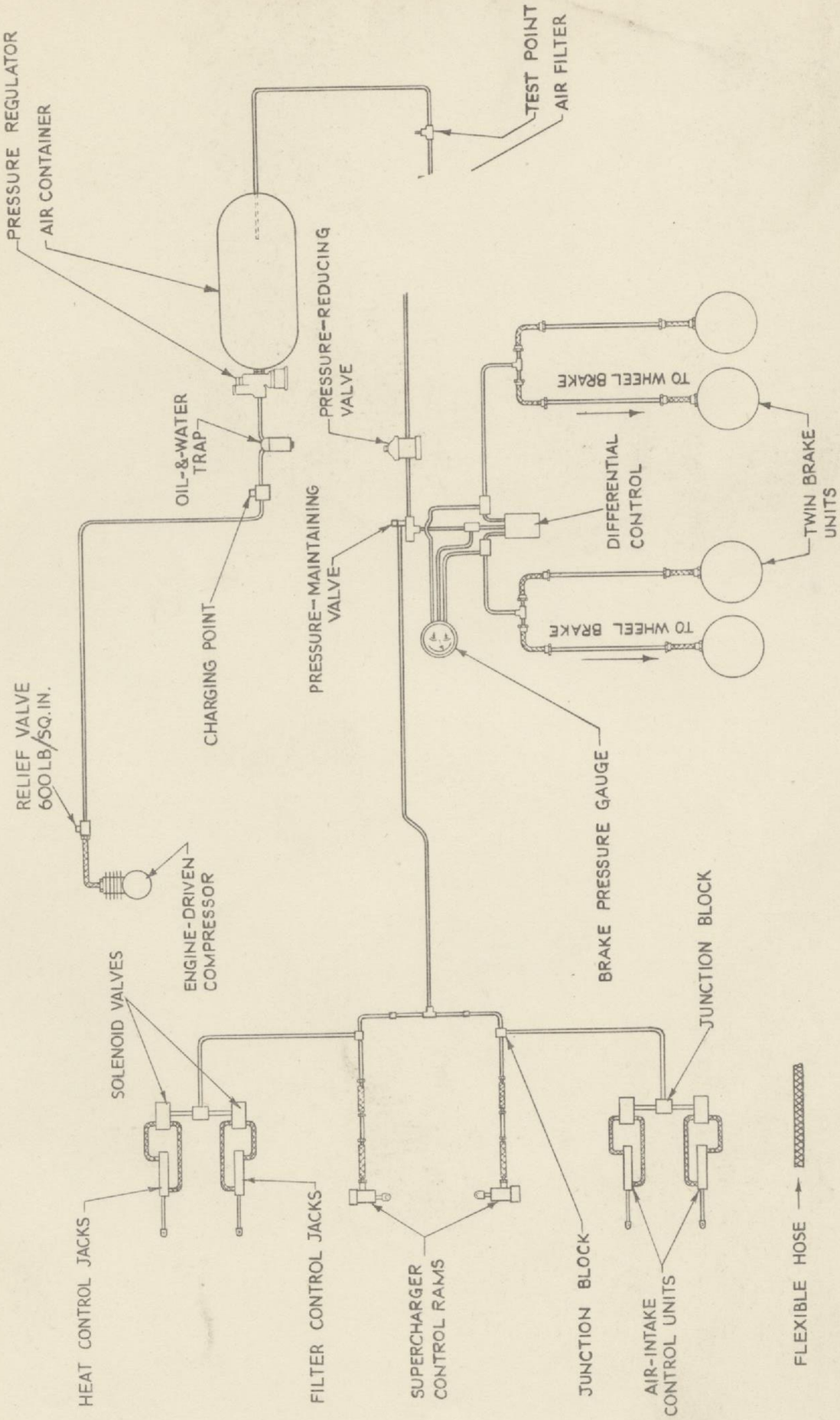

FIG. 3. PNEUMATIC SYSTEM DIAGRAM

7892 67737 1/53 450 C.B.&S.LTD. GP.55

SECTION 12

ARMAMENT INSTALLATIONS AND SERVICING

LIST OF CHAPTERS

Note.—*A list of contents appears at the beginning of each chapter*

1 Guns (*Not applicable*)

2 Bombing equipment

G1797 M18728 8/50 550 C.B.&S.Ltd. Gp.30

CHAPTER 2

BOMBING EQUIPMENT

Chapter 2

BOMBING EQUIPMENT

LIST OF CONTENTS

	Para.
Introduction	1
Bomb doors	2
Installation of bomb carriers	
Wing bombs	3
Changing over to 500 lb. bomb installation	4
Bomb winches	
Bombs up to 500 lb.	5
The 4,000 lb. bomb	6

LIST OF ILLUSTRATIONS

	Fig.
Wing bomb carrier and fairing	1
Installation for 4,000 lb. bomb	2
Arrangement and loading for 4,000 lb. bomb	3
Alternative installation for four 500 lb. bombs	4
Manual release for 4.000 lb. bomb	5
Fuselage bombs	6

Introduction

1. The information given in this Chapter deals with the equipment installed in the aircraft for loading, carrying, or releasing the bombs and pyrotechnics, but the actual loading or removal of the stores is not described.

Bomb doors

2. To open the bomb doors while the engines are stationary, move the appropriate selector lever to the DOWN position and operate the hydraulic hand pump, until the bomb doors are fully open. If the electrical services switch is ON, the indicator lamp on the bomb distributor panel will light. Return the selector lever to its neutral position. When positioning the bomb trolley under the bomb bay, it should be noted that the aircraft will sink as the bomb load is taken on the winches and the bomb doors may foul the trolley wheels if these are in line with the doors.

INSTALLATION OF BOMB CARRIERS

Wing bombs

3. Before the wing bomb carriers and fairings can be fitted, it may be necessary to remove the wing drop tanks slip release gear. To do this, remove the three attachment bolts holding the slip release gear to the wing, the electrical plug from the wing socket, and lower the release gear. Replace all bolts, nuts and washers in the slip release unit. Move the selector switch on the front spar in the bomb bay from WING TANKS to BOMBS. To fit the bomb carrier and fairing (*fig.* 1) proceed as follows :—

(1) Remove the fabric patches covering the bomb fairing front and rear attachment holes in the wing lower surface.

(2) Offer up the universal bomb carrier and insert the carrier attachment bolts through the front and rear eye-bolts on rib No. 8. Insert the attachment bolt through the slip release lug and the centre eye-bolt. To suit the carrier, adjust the eye-bolts to within the following limits ; front and rear eye-bolts 3 turns minimum and $3\frac{1}{2}$ turns maximum respectively, and the centre eye-bolt half a turn maximum. Tighten the eye-bolt lock nuts and secure the carrier attachment nuts.

(3) Offer up the front half of the bomb fairing so that the holes in the aft end line up with the front side stays attachment holes and insert the attachment bolt, with washer, through each side stay and the bomb fairing into the anchor plates on the wing skin. Shims, Part No. E.98507, may be used if required to make good any clearance between the side stays and the fairing. Lock the bolts to the side stays with locking wire. Secure the front end of the fairing to the wing skin with a $\frac{5}{16}$ in. B.S.F. bolt.

(4) Repeat the same operation on the rear half of the fairing.

(5) Insert the 5 pin electrical plug from the slip release gear into the wing socket.

(6) Fit the two centre fairing panels.

Note . . .

(a) Shims, Part No. E.98507, may also be used to provide clearance round the front and rear carrier attachment bolts.

(b) If the bomb carrier fairing is not required, Bakelite packing washers, Part No. F.98999, are to be fitted to make good the clearance between the side stays and the wing surface. These washers are stowed in the rear half of the fairing.

Changing over to 500 lb. installation

4. No structural alterations are made in this operation and the change over takes little time :—

(1) Attach the adapter beams to the support brackets on the wing centre rib with quick-release pins No. 3.

(2) Disconnect the forward bomb steady bars and strap the components against the lower face of the front spar. Adjust the hand wheel of the rear steady bars to raise the pads as high as they will go.

(3) Offer up each half of the front bomb mounting frame and secure the front ends to the side panels rib under the front spar and to the aligning eye-bolt on rib No. 1 with quick release pins No. 2. Bolt the two halves together and bolt the complete mounting to the adapter beam.

(4) Adjust the steady pads on the frames to the following dimensions, taken between the top face of the pad and the lower face of the bomb mounting. Front pads : 0 ·42 in. + 0 ·01 in. —0 ·02 in., rear pads : 1 ·16 in. + 0 ·01 in. —0 ·02 in.

(5) Attach the rear bomb mounting frame in a similar way. The rear attachment points are the eye-bolts on the rear spar to fuselage joint brackets and the front attachments are the eye-bolts under ribs No. 1.

(6) Adjust the rear mounting steady pads. The dimensions are, front pads : 0 ·99 in. + 0 ·01 in. —0 ·02 in., rear pads : 0 ·54 in. + 0 ·01 in. —0 ·02 in.

BOMB WINCHES

Bombs up to 500 lb.

5. A bomb loading winch, mounted on the floor of the rear fuselage compartment forward of bulkhead No. 4, is a permanent part of the aircraft. The hoisting cable, which has a ball end, is wound on to a deeply grooved drum and pays off in line. The winch is operated by a handle from the rear compartment, and a lever on the winch, when moved from the vertical position declutches the drum from the winding mechanism and permits the hoisting cable to be pulled quickly from the drum. When not in use the cable is wound fully on to the drum, the ball end stowed in a clip adjacent to the drum, and the winding handle strapped against bulkhead No. 4. To hoist the bombs, the cable is threaded over pulleys on each bomb mounting frame according to the position of the bomb being loaded. A friction device on the handle prevents the winch and cable being overloaded. For the adjustment of this device and a description of the winch refer to Sect. 4, Chap. 3.

The 4,000 lb. bomb

6. Two special winches are provided for loading the 4,000 lb. bomb and are permanently attached to the wing centre rib. The winches are manually operated by detachable handles inserted through holes in the fuselage port side panel, engaging with a universal coupling on each winch. Normally, the handles are stowed in the rear fuselage. The 70 cwt. hoisting cables have eye-bolt ends to connect with the hoisting brackets on the bomb. A spring-loaded pawl on each winch must be lifted before the hoisting cables can be lowered. The rear winch has an adjustable cable guide, set by the manufacturers, to enable the bomb to be offered up straight to the release gear. To prevent overloading of the winches and hoisting cables, a friction device is incorporated in the handle attachment to the shaft, for adjustment of this device and a description of the winches, refer to Sect. 4, Chap. 3.

G1850 M26733 550 9/49 C.B.&S.Ltd. Gp.30

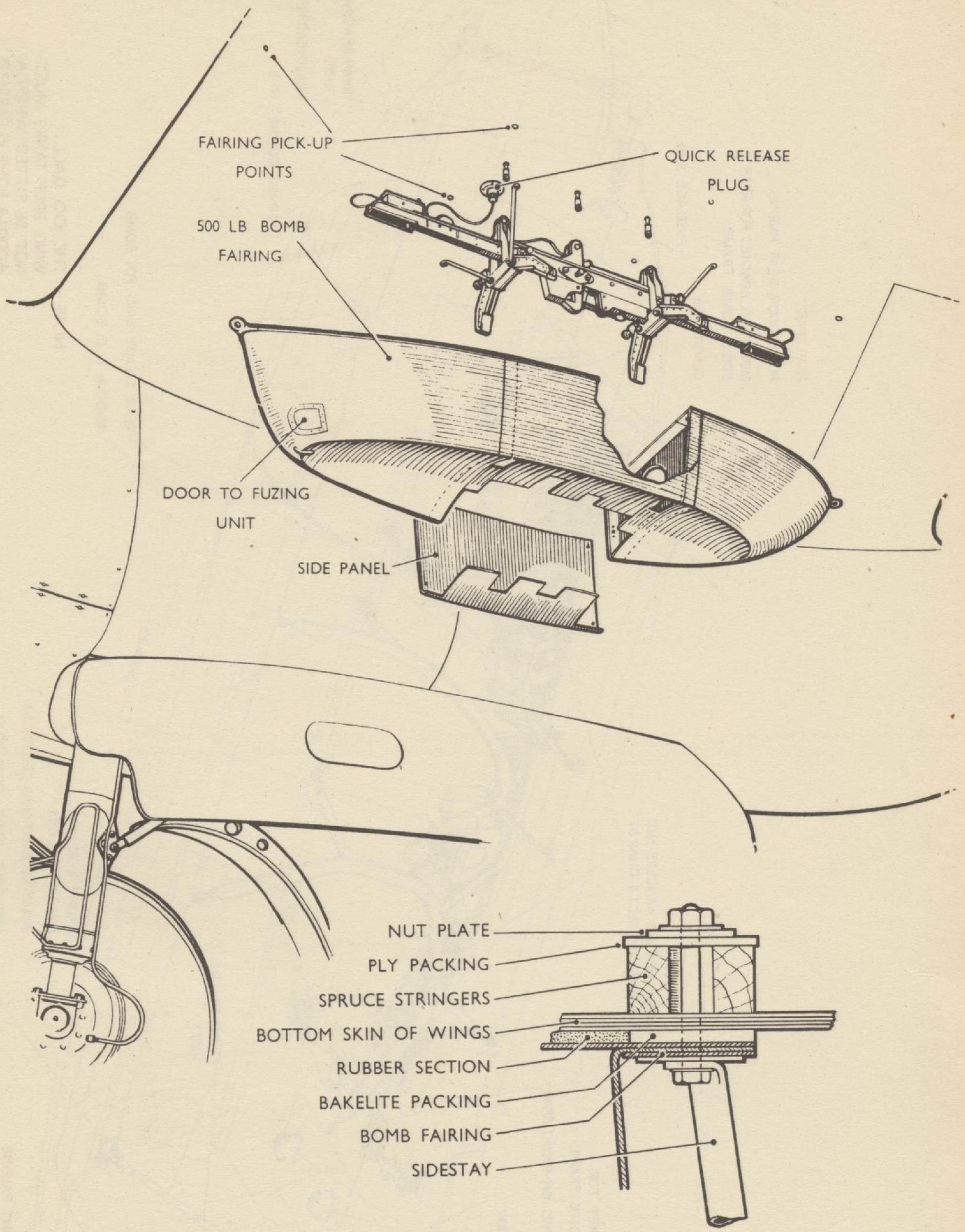

Typical section showing attachment of bomb carrier sidestays and fairing to wing

FIG. 1. WING BOMB CARRIER AND FAIRING

G1851 M26734 9/49 550 C.B.& S.Ltd. Gp.55.

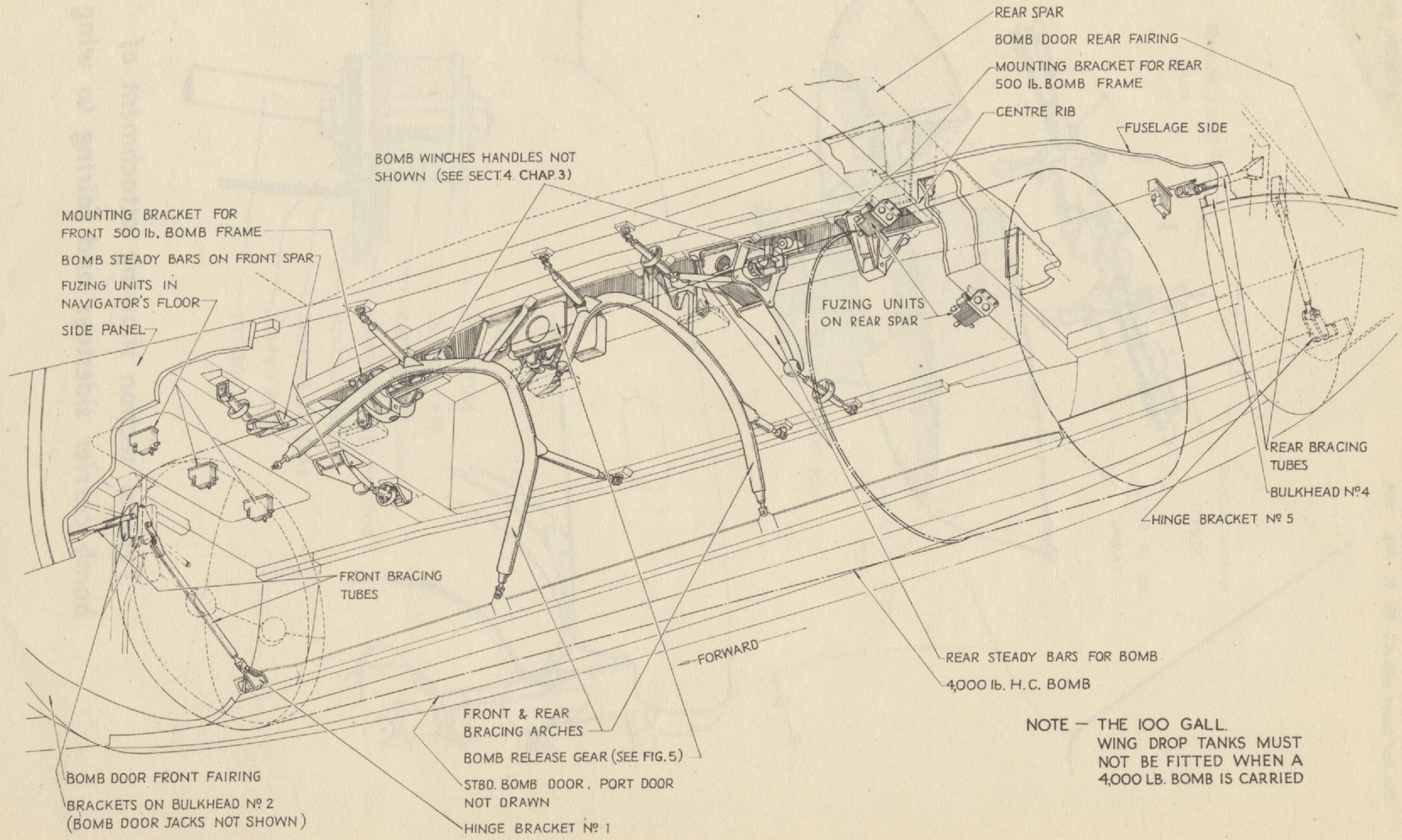

NOTE — THE 100 GALL. WING DROP TANKS MUST NOT BE FITTED WHEN A 4,000 LB. BOMB IS CARRIED

FIG. 2. INSTALLATION FOR 4,000LB. BOMB

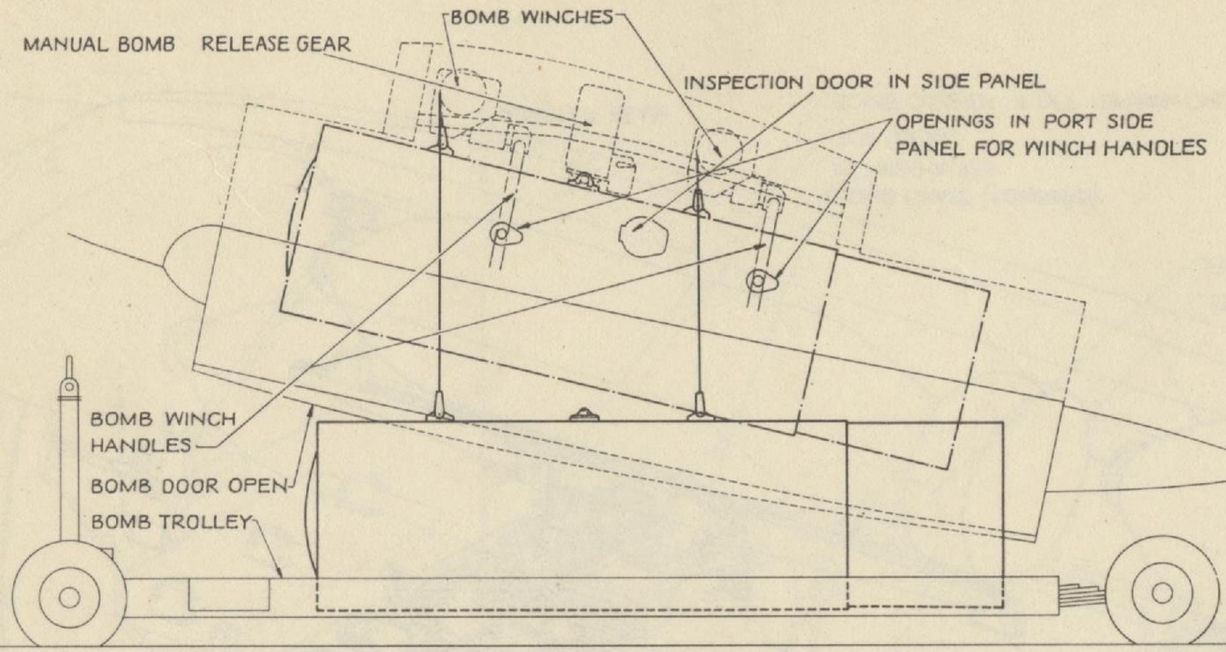

LOADING OF 4,000 lb. H.C. BOMB

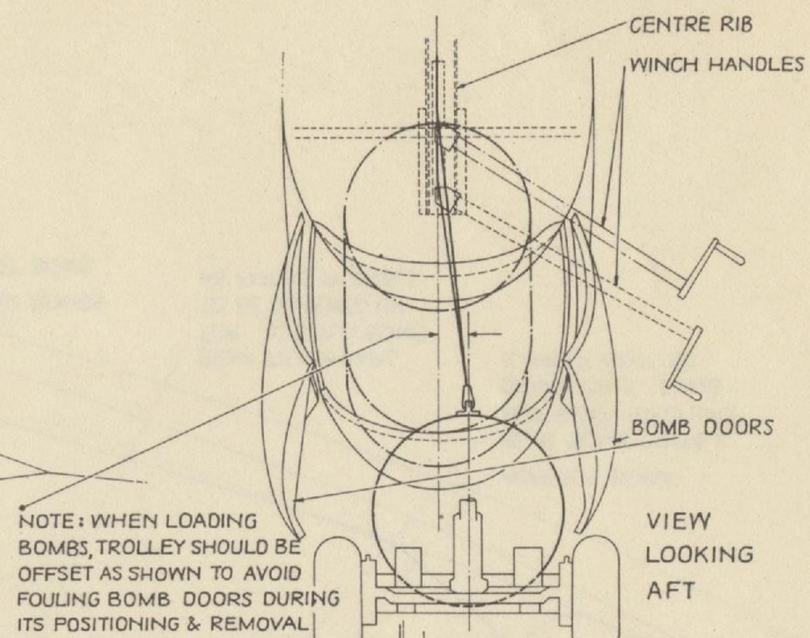

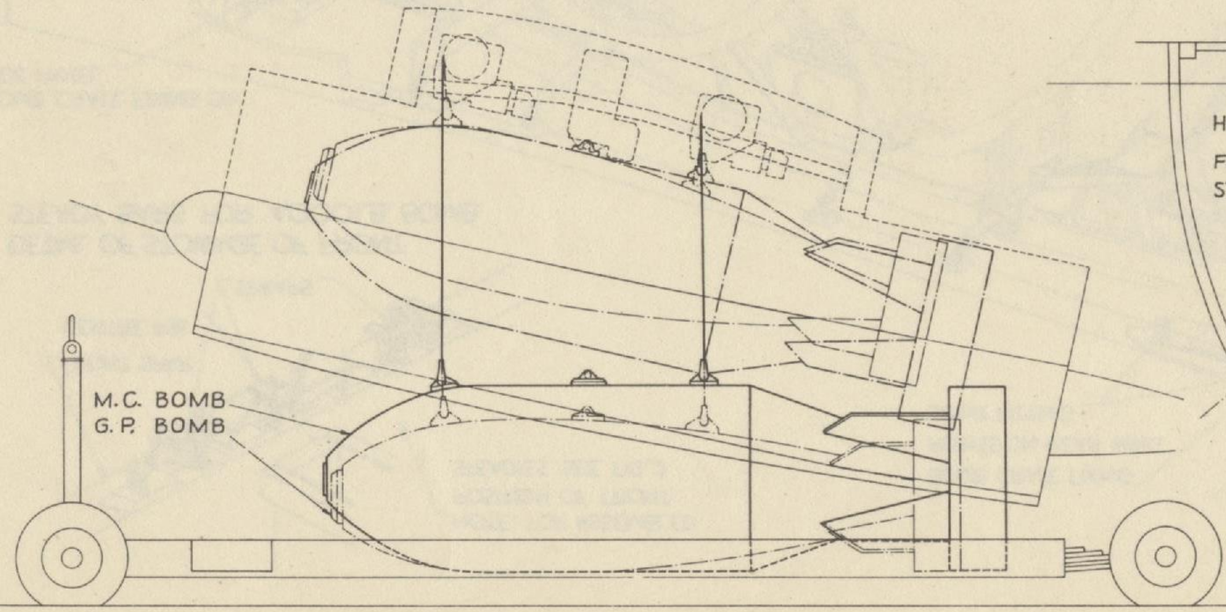

LOADING OF 4,000 lb. M.C. & G.P. BOMBS

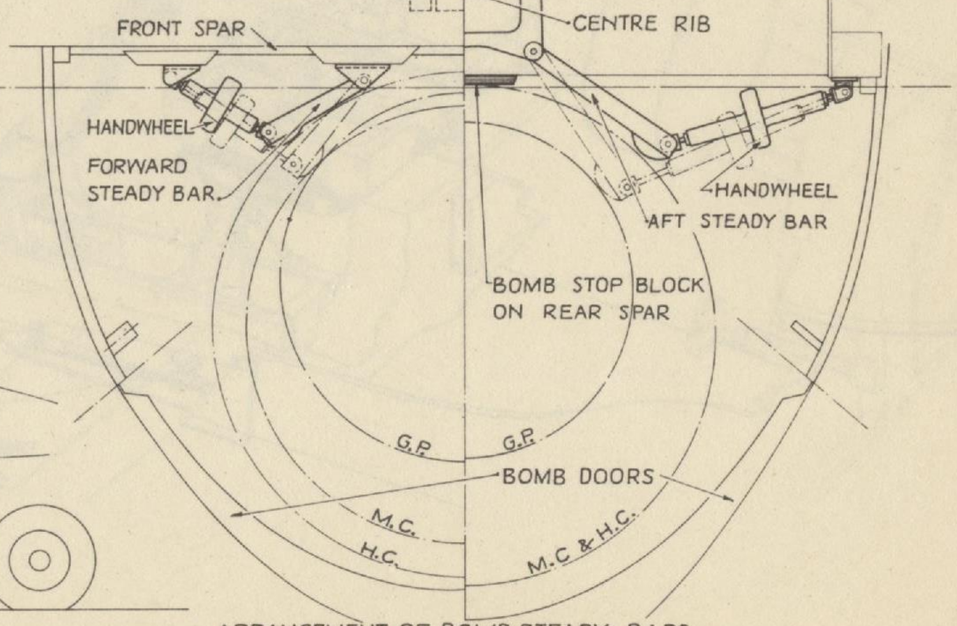

ARRANGEMENT OF BOMB STEADY BARS

FIG. 3. ARRANGEMENT AND LOADING FOR 4,000LB. BOMB

G1851 M26734 9/49 550 C.B.& S. LTD. GP55.

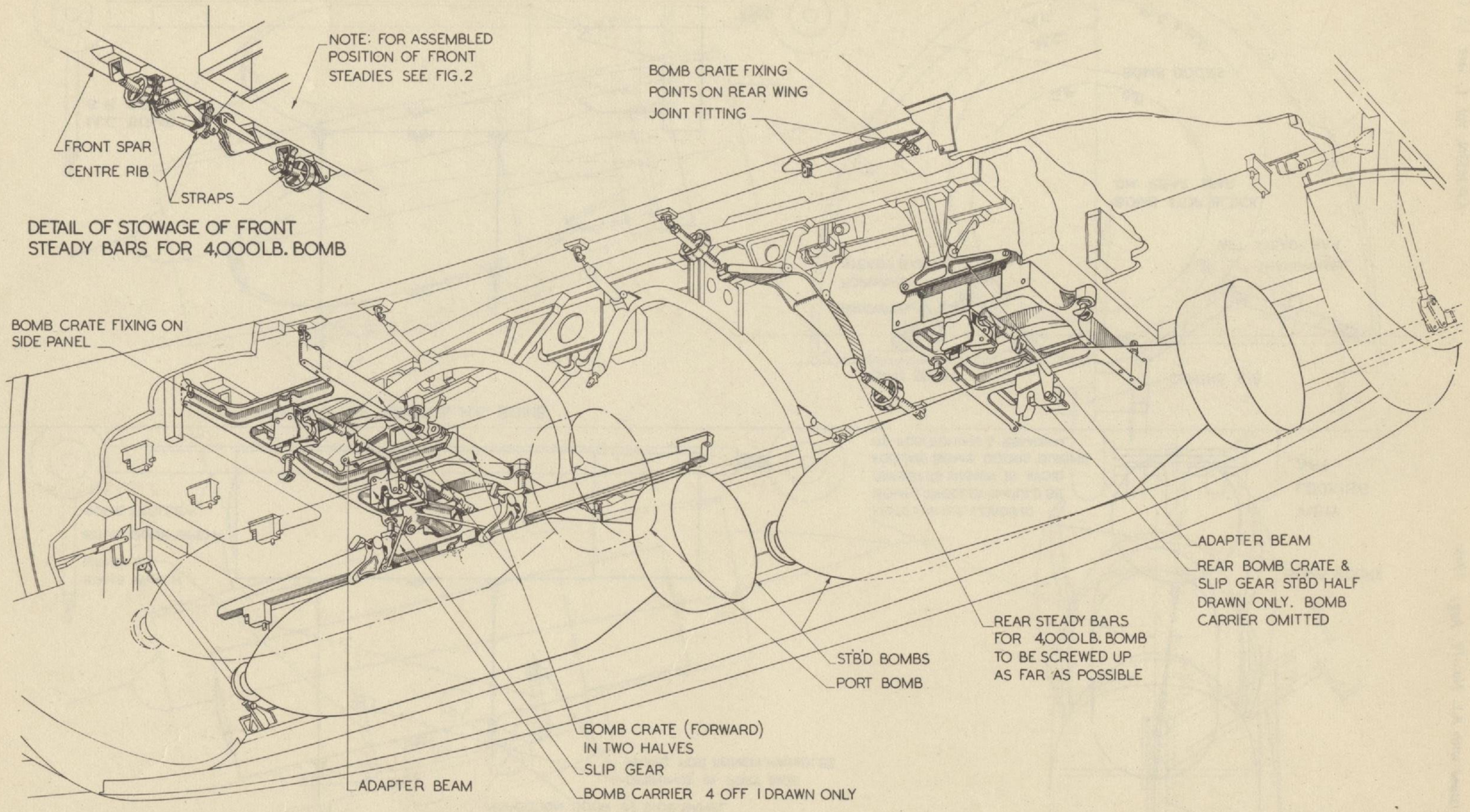

FIG. 4. ALTERNATIVE INSTALLATION FOR FOUR 500LB. BOMBS

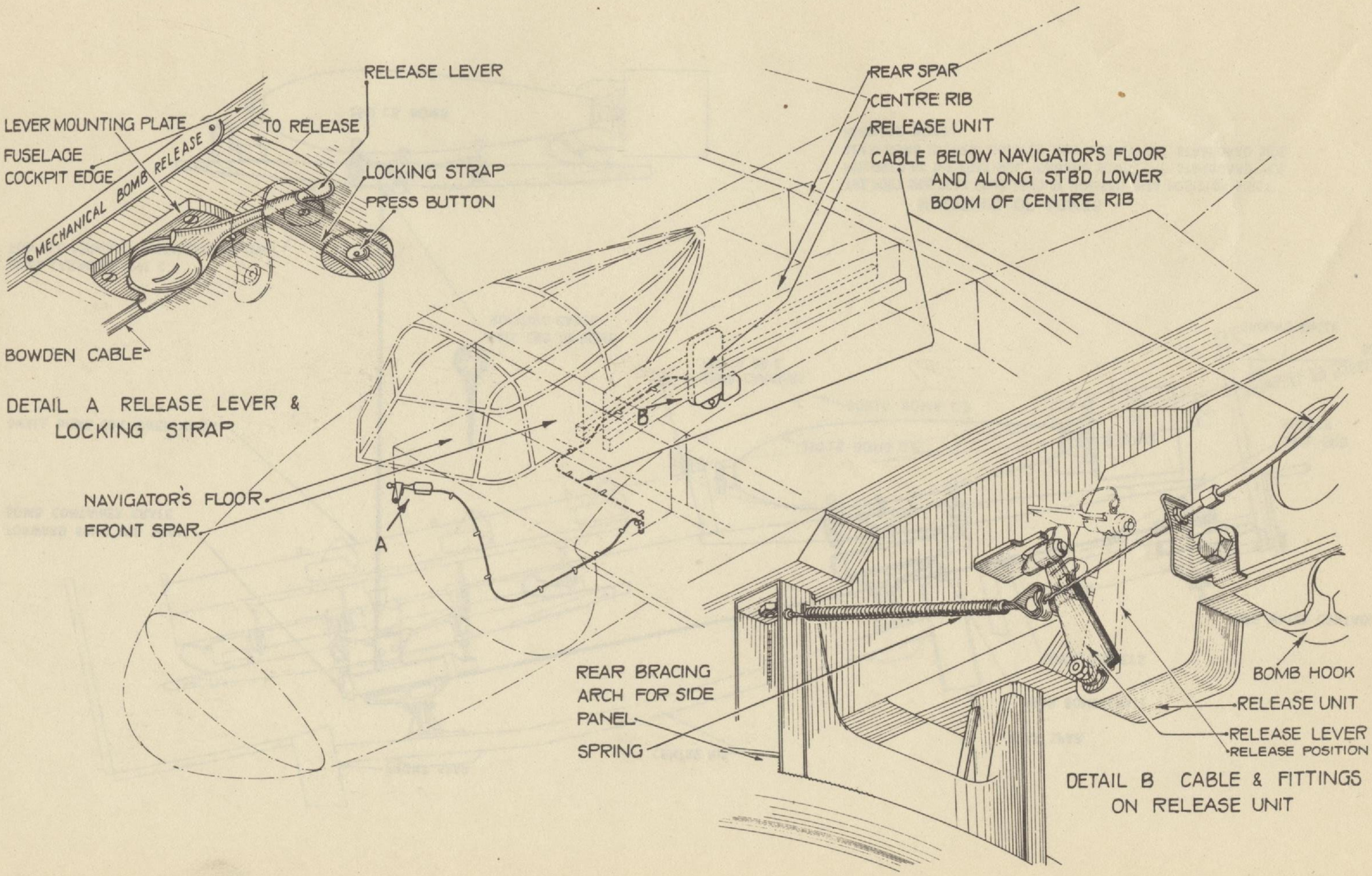

FIG. 5. MANUAL RELEASE FOR 4,000LB. BOMB

G1851 M26734 9/49 550 C.B.& S.LTD. GR55.

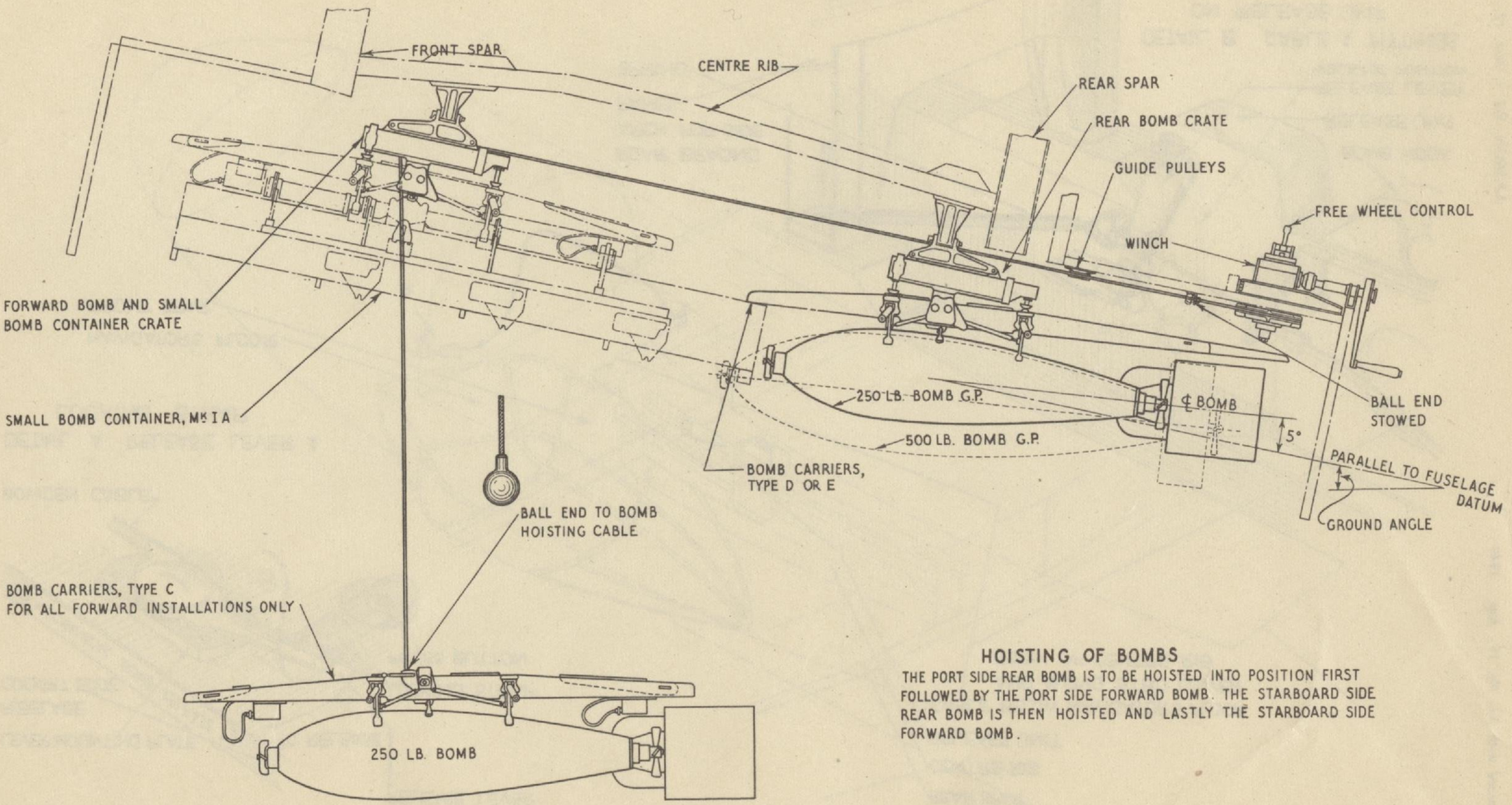

FIG. 6. FUSELAGE BOMBS

HOISTING OF BOMBS

THE PORT SIDE REAR BOMB IS TO BE HOISTED INTO POSITION FIRST FOLLOWED BY THE PORT SIDE FORWARD BOMB. THE STARBOARD SIDE REAR BOMB IS THEN HOISTED AND LASTLY THE STARBOARD SIDE FORWARD BOMB.

This label issued with A.L. No. 8

June, 1948

A.P. 2653 N, Volume 1

APPENDIX 1

INSTALLATION OF ALTERNATIVE EQUIPMENT ASSOCIATED WITH BOMBING

SECTION 1 - ELECTRICAL INSTALLATION

Chap. 1 - General description
Chap. 2 - Day Bomber
Chap. 3 - Night Bomber
Chap. 4 - Target indicator
Chap. 5 - Flare layer

SECTION 2 - RADAR, RADIO, AND BOMB SIGHT INSTALLATIONS

Chap. 1 - Radar and radio
Chap. 2 - Bomb sights

Chapter 1

GENERAL DESCRIPTION

List of Contents

	Para.		Para.
Introduction	1	Bomb door relay	10
Circuits	4	Bombs or tanks at wing stations	11
D.C. supply	6	Testing	12
Table of fuses	7		
Bomb fuzing	8		

List of Illustrations

	Fig.		Fig.
Generator controls) 2-speed supercharger) Fire extinguishers) ...	1	Bomb circuit - theoretical	3
Bomb circuit - wiring ...	2	Voltage regulator and auxiliary fuse panels...	4

INTRODUCTION

1. This chapter deals with the basic circuit for the release of stores from the bomb stations, and circuits which differ from those in the Mosquito B. Mk.16 handbook. Full details of the complete electrical installation are given in A.D. 4288 - "Mosquito B. Mk.35, Electrical Installation".

2. The circuit provides facilities for using the aircraft in the following duties:-

(1) Day bombing
(2) Night bombing
(3) Target indicating
(4) Flare laying

3. For each role the following equipment, which forms the basic circuit, is necessary:- Firing, circuit, and selector switches; automatic bomb distributor; releases and fuzing units and their associated wiring. In addition, for automatic control of the camera, one double-pole and two single-pole relays and, with the exception of the Target Indicator role, a camera control unit. The equipment mountings are standard to enable conversion from one role to another to be carried out rapidly.

CIRCUITS

4. Two-pole wiring is installed and to enable earth return equipment to be used the generator negative is earthed through a 60 amp. fuse (fig. 1).

5. The earthed negative necessitated modifications to the fire extinguisher and 2-speed supercharger circuits. To prevent inadvertent operation of these circuits, the switches have been connected in the feed to the cylinder in the fire extinguisher circuit and to the ram in the supercharger circuit.

D.C. SUPPLY

6. Power is supplied from a generator, Type 02, mounted on the starboard engine charging two 12-volt, 40 amp. hr. accumulators connected in series. A suppressor, Type W, mounted on the engine bearer, and a voltage regulator, Type J2 on a panel in the wing deck (fig.4), are connected in the circuit and maintain a steady output irrespective of engine speed or load fluctuations. A cut-out, Type D, prevents a reverse feed from the accumulator, and a charge fail warning lamp on the pilot's panel indicates when the cut-out is open or the main 60 amp. fuse is blown.

TABLE OF FUSES

7. A list of the circuits, which are connected across the accumulator, with the fuse number and rating is given in the following table. Each fuse box is marked with a coloured band to ensure correct assembly.

Fuse boxes mounted on J.B.C.

Fuse No.	Fuse Rating	Circuit
Red band		
1	5 amp.	Horn
2	5 amp.	Undercarriage indicator
3	5 amp.	Flap indicator
4	5 amp.	Fuel gauge
5	5 amp.	Air temperature indicator
6	5 amp.	L.H. engine-cooling radiator flap
7	5 amp.	R.H. engine-cooling radiator flap
8	5 amp.	Supercharger

Fuse No.	Fuse Rating	Circuit
Yellow band		
9	10 amp.	Pressure head
10	5 amp.	Dash lamp
11	5 amp.	Dash lamp
12	5 amp.	Formation lamp
13	5 amp.	Navigation lamps
14	10 amp.	Identification lamps
15	5 amp.	L.H. landing lamp motor
16	5 amp.	R.H. landing lamp motor
Blue band		
17	5 amp.	Fuel pump warning
18	10 amp.	Fuel pump warning
19	5 amp.	Engine temperature
20	10 amp.	Starter
21	20 amp.	Fire extinguisher
22	20 amp.	Dinghy
23	20 amp.	L.H. landing lamp
24	20 amp.	R.H. landing lamp
Green band		
25	Spare	
26	Spare	
27	10 amp.	D.R. compass
28	40 amp.	T.R.1430
29	Spare	
30	20 amp.	I.F.F. supply
31	Spare	
32	Spare	
White band		
34	Spare	
35	5 amp.	Fire warning
36	5 amp.	Fire warning
37	10 amp.	a.c. generator
38	5 amp.	A.M.U.
39	Spare	
40	10 amp.	Camera heating
41	10 amp.	Bomb sight

Fuse boxes mounted on auxiliary fuse panel

Fuse No.	Fuse Rating	Circuit
Green and red band		
1	25 amp.	Bomb release
2	10 amp.	Camera
3	5 amp.	Nose fuzing
4	5 amp.	Tail fuzing
White and yellow band		
1	5 amp.	Distributor heating
2	Spare	
3	Spare	
4	5 amp.	Amplifier
Single-unit boxes		
33	60 amp.	d.c. generator
-	60 amp.	Earthing fuse

BOMB FUZING

8. The fuzing circuit is fed from the 25 amp. bomb fuse through the circuit switch which feeds two 5 amp. fuses, one for nose fuzing and the other tail fuzing. The fuses are connected to switch boxes, Type B, across which is connected another Type B switch which, when closed, provide for non-selective fuzing. A firing interlock is connected across the fuzing switches and prevents the removal of the firing push switch until one of the fuzing switches is ON thus preventing inadvertent release of unfuzed bombs.

9. The circuit from the fuzing switches to the fuzing units is taken through a relay, Type B, the nose fuzing circuit through terminals 6, the tail fuzing through terminals 7 and the negative return through terminals 8.

BOMB DOOR RELAY

10. The relay, Type B, has eight pairs of contacts through which fuselage bomb stations are controlled; it prevents stores from being released when the bomb doors are closed. As stated in para.9, terminals 6, 7 and 8 are utilized for the fuzing circuit; terminals 1, 2, 3 and 4 complete the release positive of stations 1, 2, 3 and 4 respectively, and terminal 5 of the release positive for the photoflash.

BOMBS OR TANKS AT WING STATIONS

11. Provision is made for bombs or tanks to be carried at the wing bomb stations. A selector switch mounted in the forward end of the bomb bay should be placed in the appropriate position - BOMBS or TANKS - dependent on the stores carried at stations 5 and 6.

TESTING

12. Before and after bombing-up, tests should be carried out in accordance with Bomber Command Engineering Staff Instruction Elec./4, Issue 2.

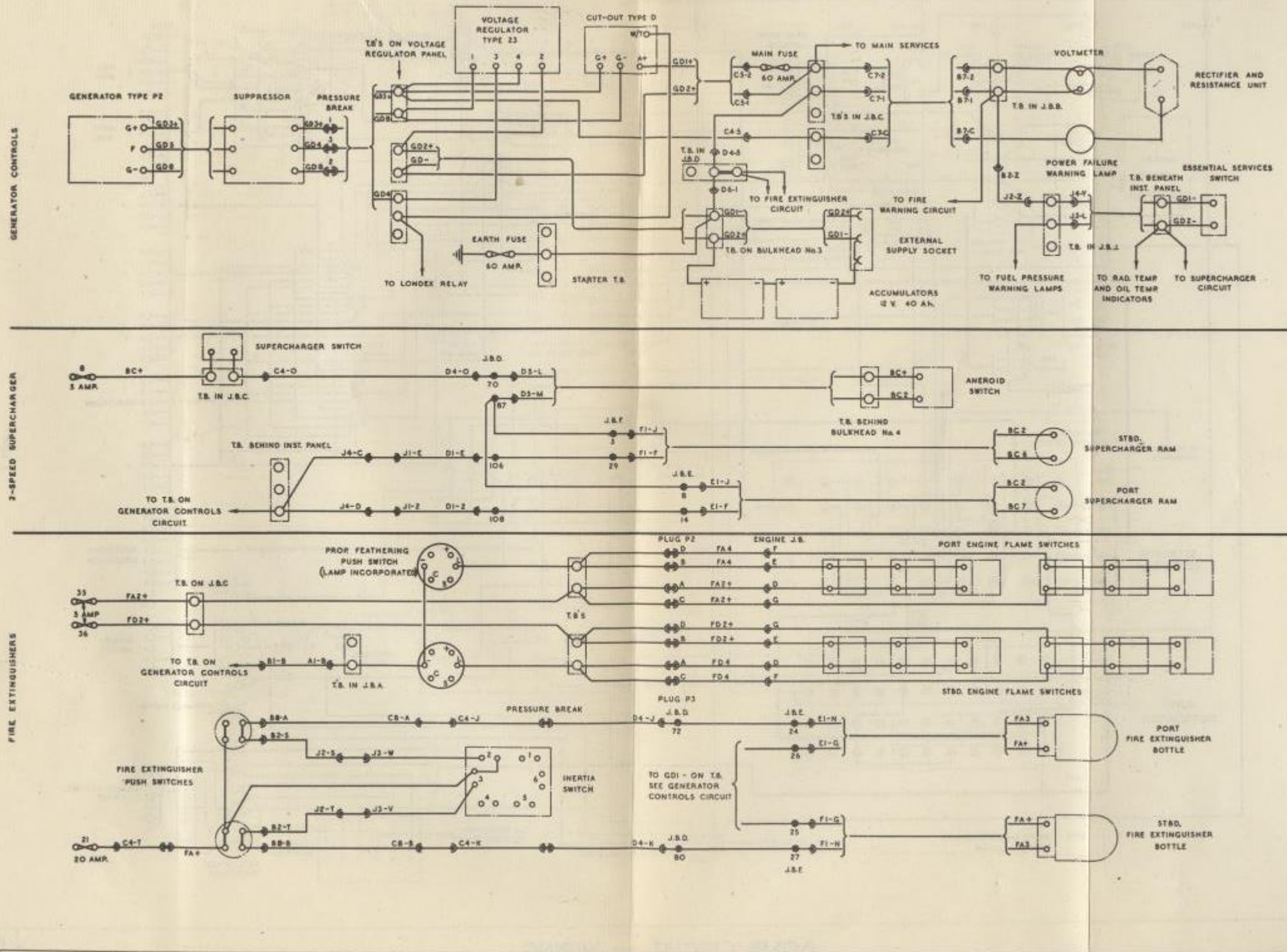

FIG. 1

ROUTING CHART

FIG. 1

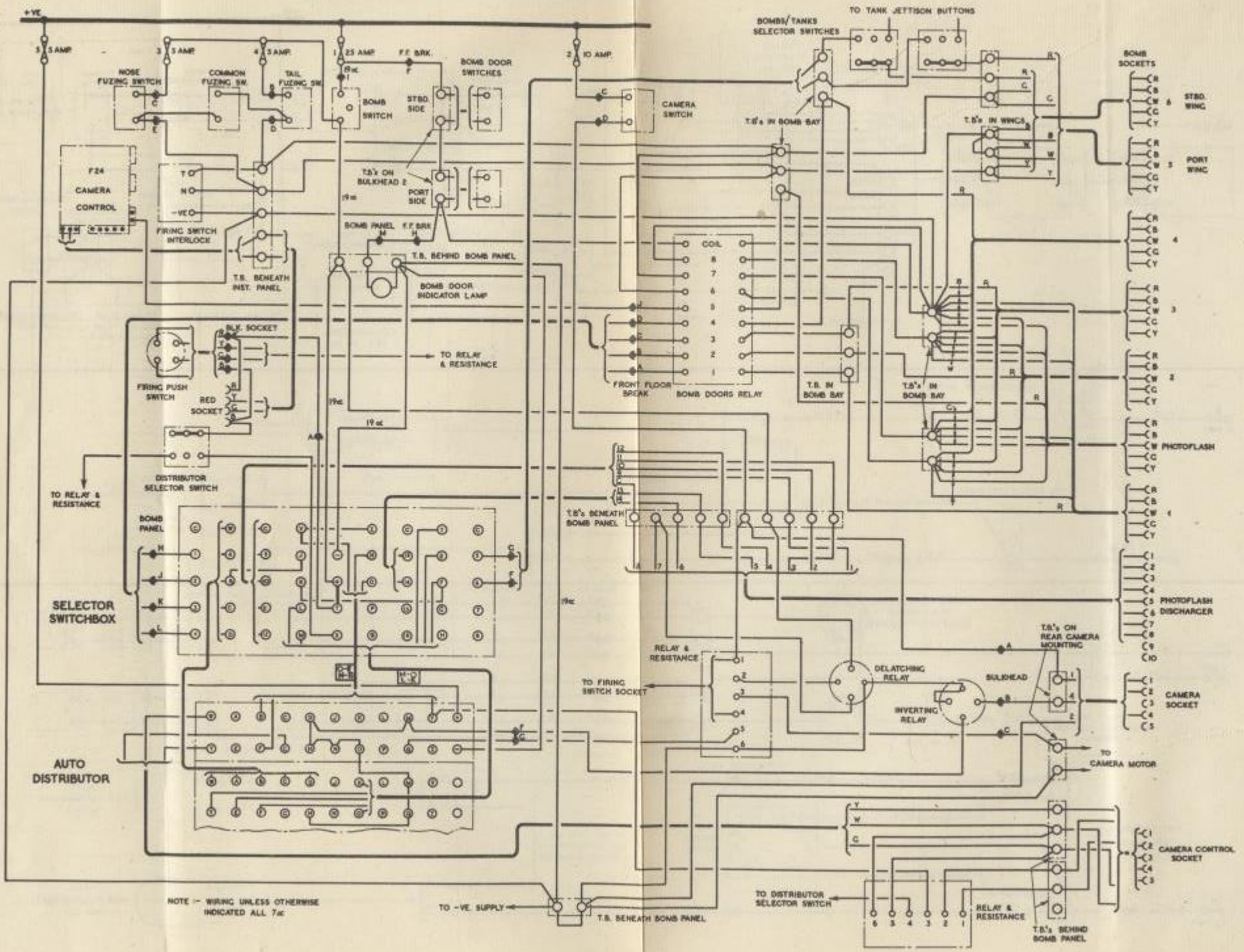

FIG. 2

BOMB CIRCUIT — WIRING

FIG. 2

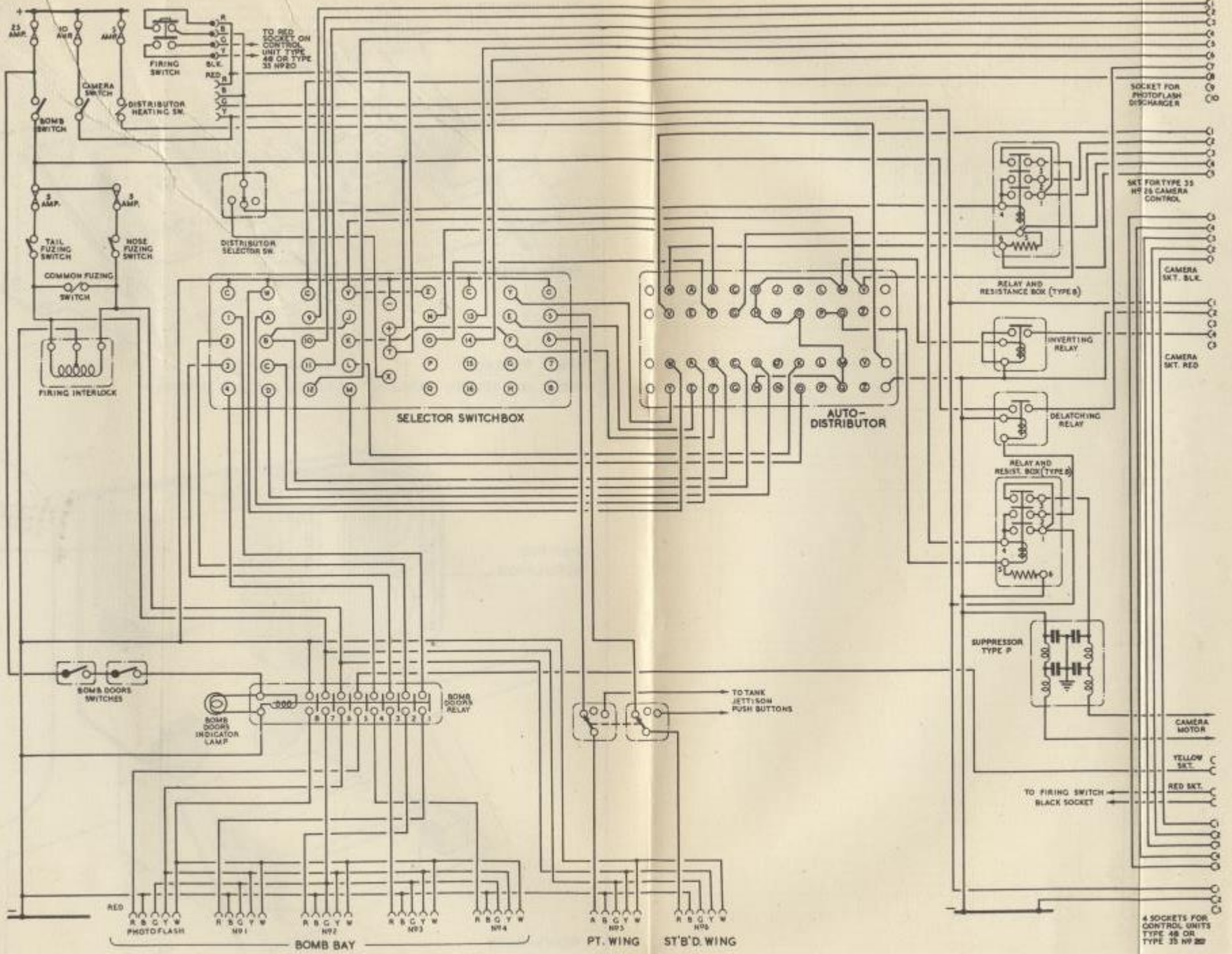

FIG. 3

BOMB CIRCUIT—THEORETICAL

FIG. 3

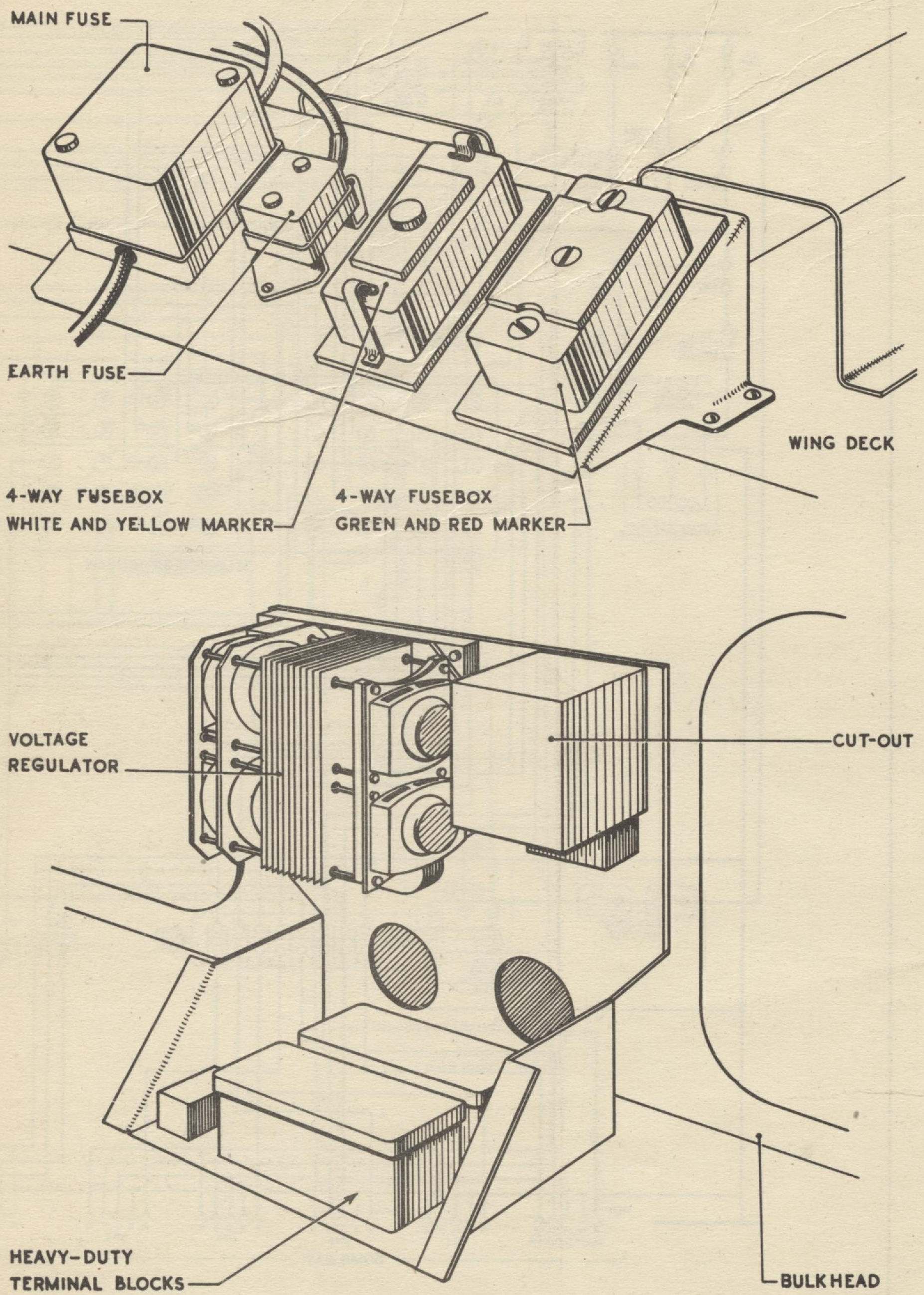

FIG. 4	VOLTAGE REGULATOR AND AUXILIARY FUSE PANELS	FIG. 4

Chapter 2

DAY BOMBER

List of Contents

	Para.		Para.
General	1	Bomb release	3
Cameras	2	Ground preparations ...	5

List of Illustrations

	Fig.		Fig.
Bomb bay	1	Camera control unit,	
Bomb panel and firing switch	2	Type 48	4
Camera mounting and connection	3	Circuit diagram ...	5

GENERAL

1. This chapter contains instructions for fitting the equipment required to adapt the aircraft for day bombing. In this role the aircraft can carry bombs in the fuselage bay and bombs or tanks at the wing stations, 5 and 6, and has full photographic facilities for low, medium or high-level duties.

CAMERAS

2. For low-level photography the K.24 camera is used, and for medium or high-level photography the F.24 camera is used. Both cameras will give single exposures or overlapping exposures when connected to the camera electrical control, Type 48 (Stores Ref. 14A/3237). Single exposures are obtained by using the push-switch on the camera control unit; overlapping exposures automatically when the bomb firing switch is pressed.

BOMB RELEASE

3. The circuit for the day bomber role is conventional and utilizes standard equipment which is described in A.P.1095B. The circuit is controlled by a switch on the bomb panel which feeds the selector switch. The selector switch feeds the distributor through the bomb firing switch when the distributor drum switch is in the DISTRIBUTOR position. The distributor arm feeds each selected bomb station at an interval selected on the spacing dial. Bombs can be selected on switches 1 to 6.

4. The bomb firing switch starts the camera motor when the camera circuit switch is closed. The camera motor will continue to run until the circuit is broken by the push-switch on the camera control unit.

GROUND PREPARATIONS

5. The following instructions apply irrespective of the role in which the aircraft has previously been used.

A...Plug No.1 carrier into black socket (fig.1)
B...Place tanks/bombs switch in position dependent on wing load (fig.1)
C...Disconnect and remove 1½ in. photoflash discharger
D...Instal and connect up camera using black 5-pin plug (fig.3)
E...If the F.24 camera is used, fit camera motor on wedgeplate and connect camera electrical connection and flexible drive (fig.3)
F...Plug firing switch into black socket (fig.2)
G...Fit automatic bomb distributor, Type VII (fig.2)
H...Set distributor selector switch to TYPE VII (fig.2)
I...Fit and connect up camera control unit, Type 48, using 3-pin, 5-pin and red 2-pin sockets (fig.4)

6. Plugs and sockets not used in this role should be placed in the stowages provided adjacent to the equipment. Before and after bombing-up, tests should be carried out in accordance with Bomber Command E.S.I./Elect 4/Issue 2.

ATP/3409/550/7/48

This leaf issued with A.L. No.9, July 1948

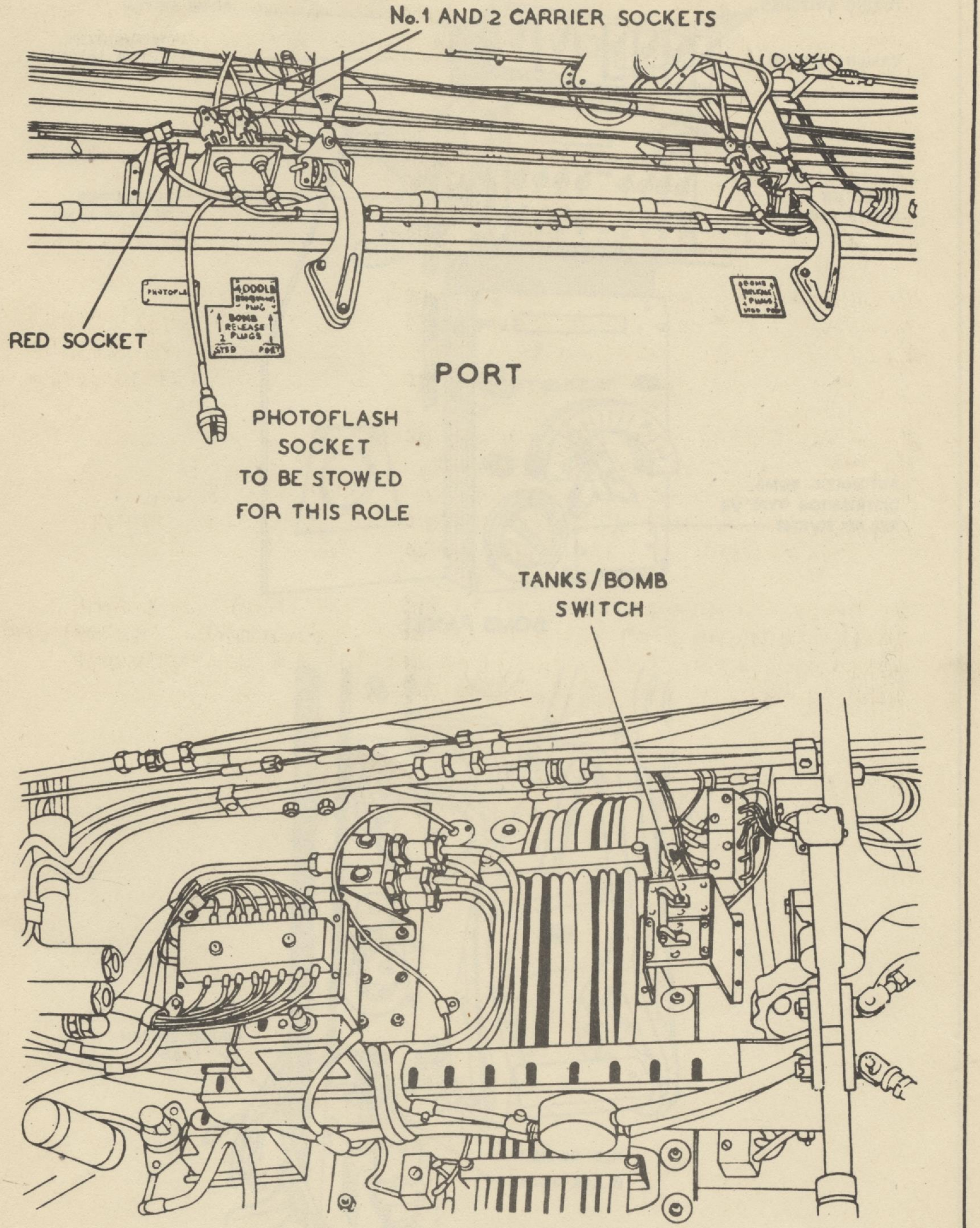

FIG. 1 — **BOMB BAY** — FIG. 1

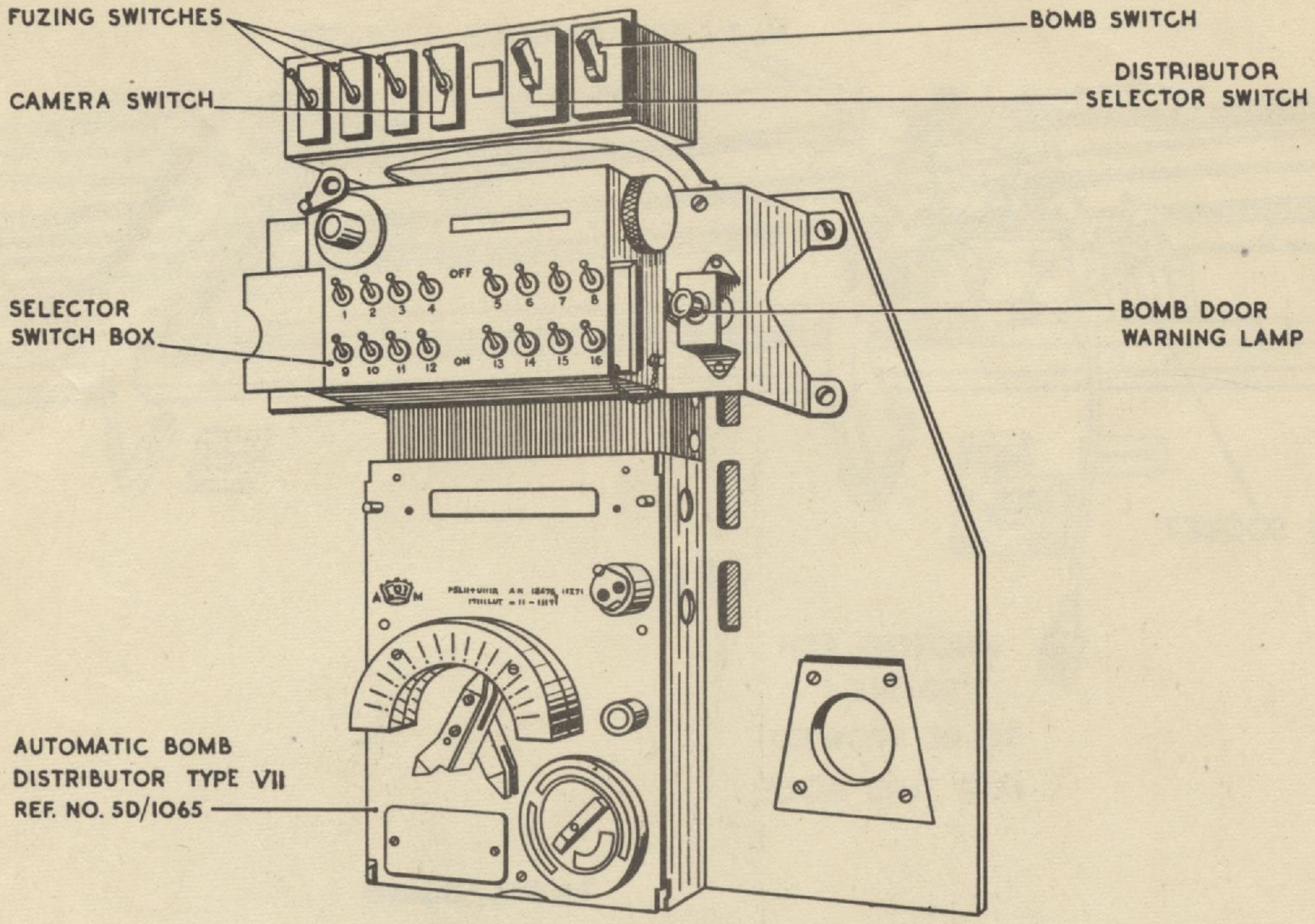

BOMB PANEL

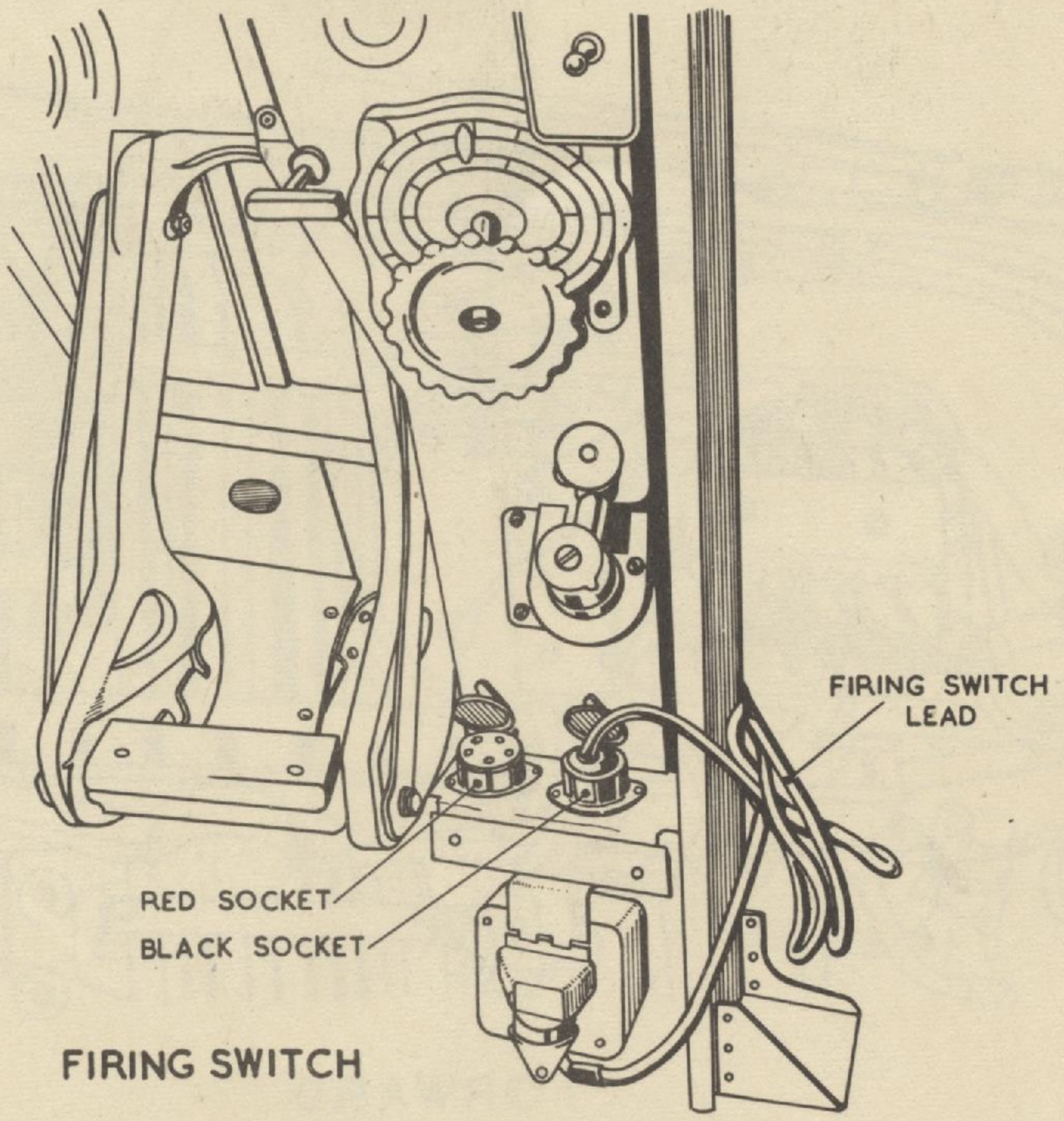

FIRING SWITCH

FIG. 2	BOMB PANEL AND FIRING SWITCH	FIG. 2

This leaf issued with A. L. No. 9, July 1948

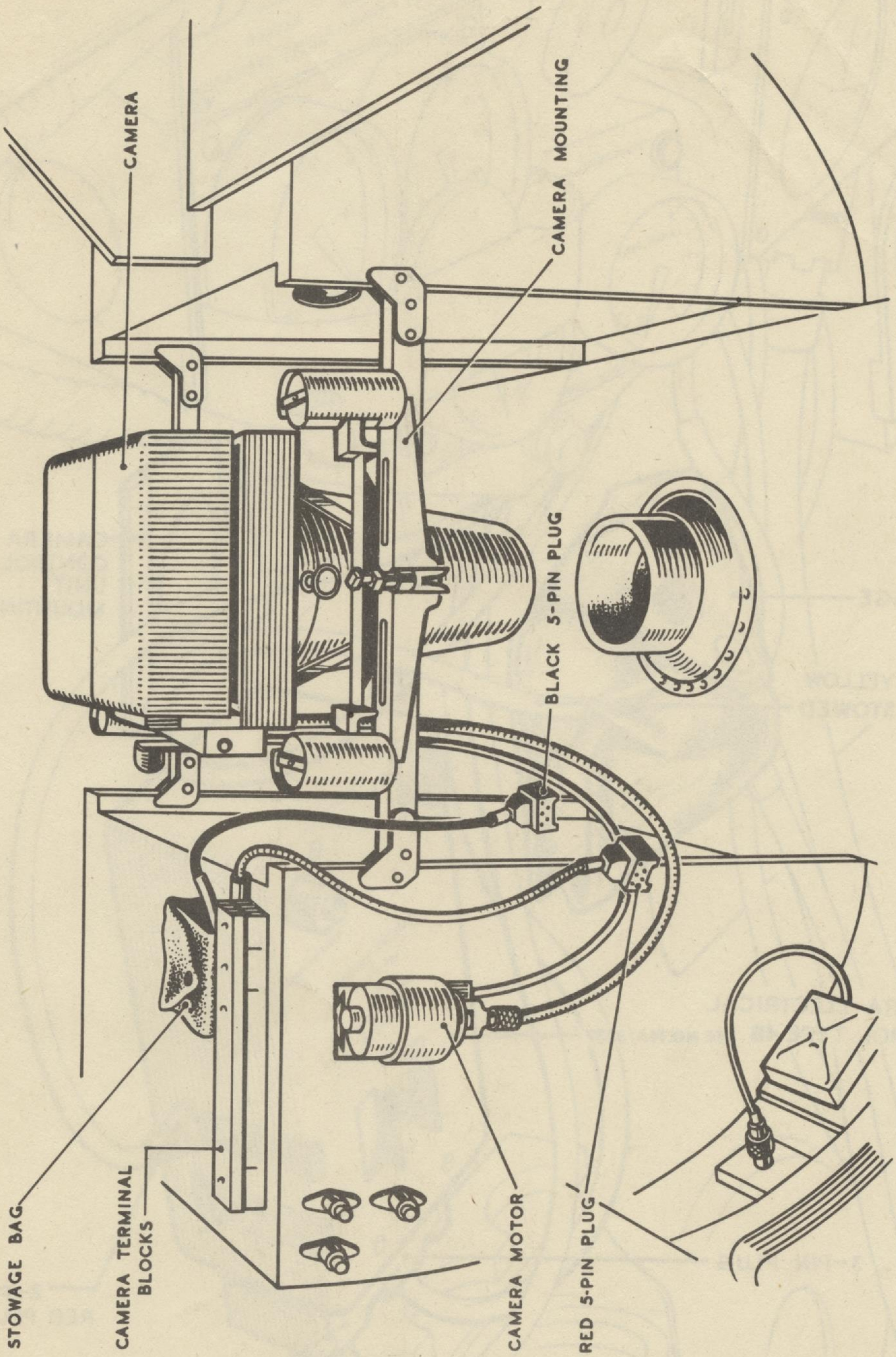

FIG. 3 — CAMERA MOUNTING AND CONNECTIONS — FIG. 3

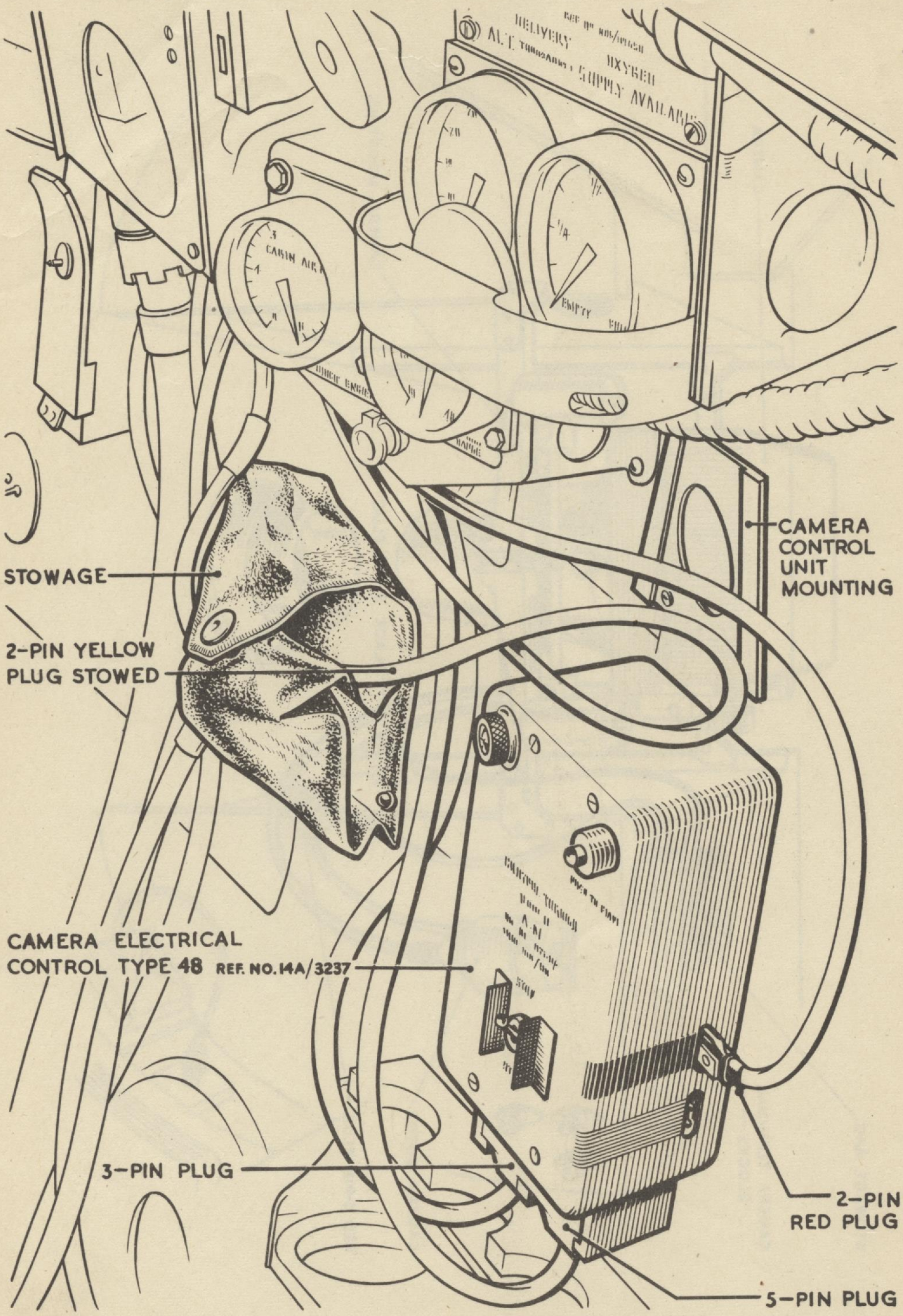

FIG. 4. CAMERA CONTROL UNIT, TYPE 48 FIG. 4

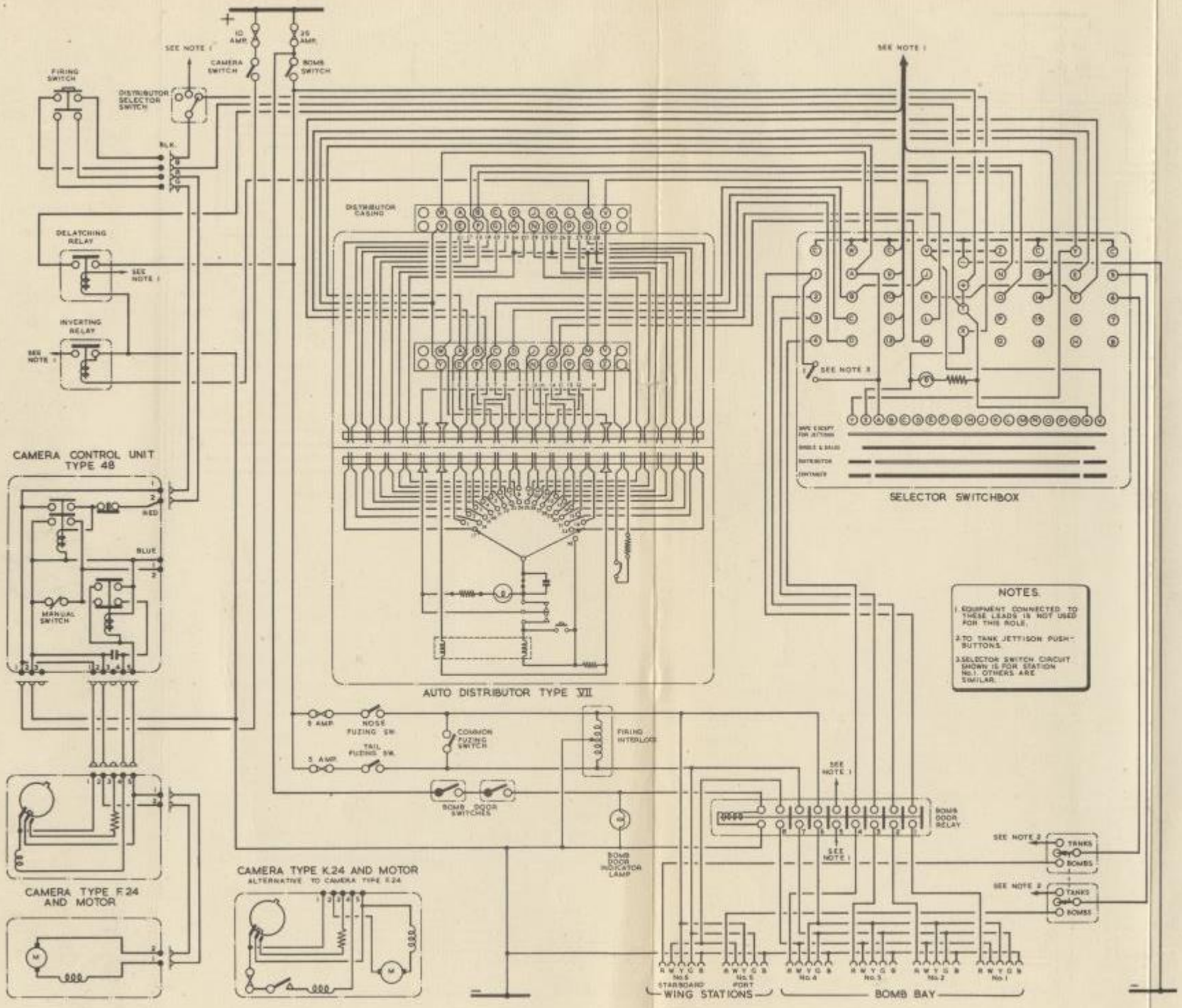

FIG. 5

CIRCUIT DIAGRAM

FIG. 5